Compal confidential

Schematics Document

Mobile Penryn uFCPGA with Intel Cantiga_PM+ICH9-M core logic

2008-02-25

www.kythuatvitinh.com

Security Classification	Compal Secret Data		
Issued Date	2008/02/25	Deciphered Date	2008/02/25

THIS SHEET OF ENGINEERING DRAWING IS THE PROPRIETARY PROPERTY OF COMPAL ELECTRONICS, INC. AND CONTAINS CONFIDENTIAL AND TRADE SECRET INFORMATION. THIS SHEET MAY NOT BE TRANSFERED FROM THE CUSTODY OF THE COMPETENT DIVISION OF R&D DEPARTMENT EXCEPT AS AUTHORIZED BY COMPAL ELECTRONICS, INC. NEITHER THIS SHEET NOR THE INFORMATION IT CONTAINS MAY BE USED BY OR DISCLOSED TO ANY THIRD PARTY WITHOUT PRIOR WRITTEN CONSENT OF COMPAL ELECTRONICS, INC.

Compal Electronics, Inc.

Title: *Cover Sheet*

Size: Custom | Document Number: *LA-4102P Blade discrete* | Rev: 0.4

Date: Monday, February 25, 2008 | Sheet 1 of 53

Compal confidential

Montevina Consumer Discrete

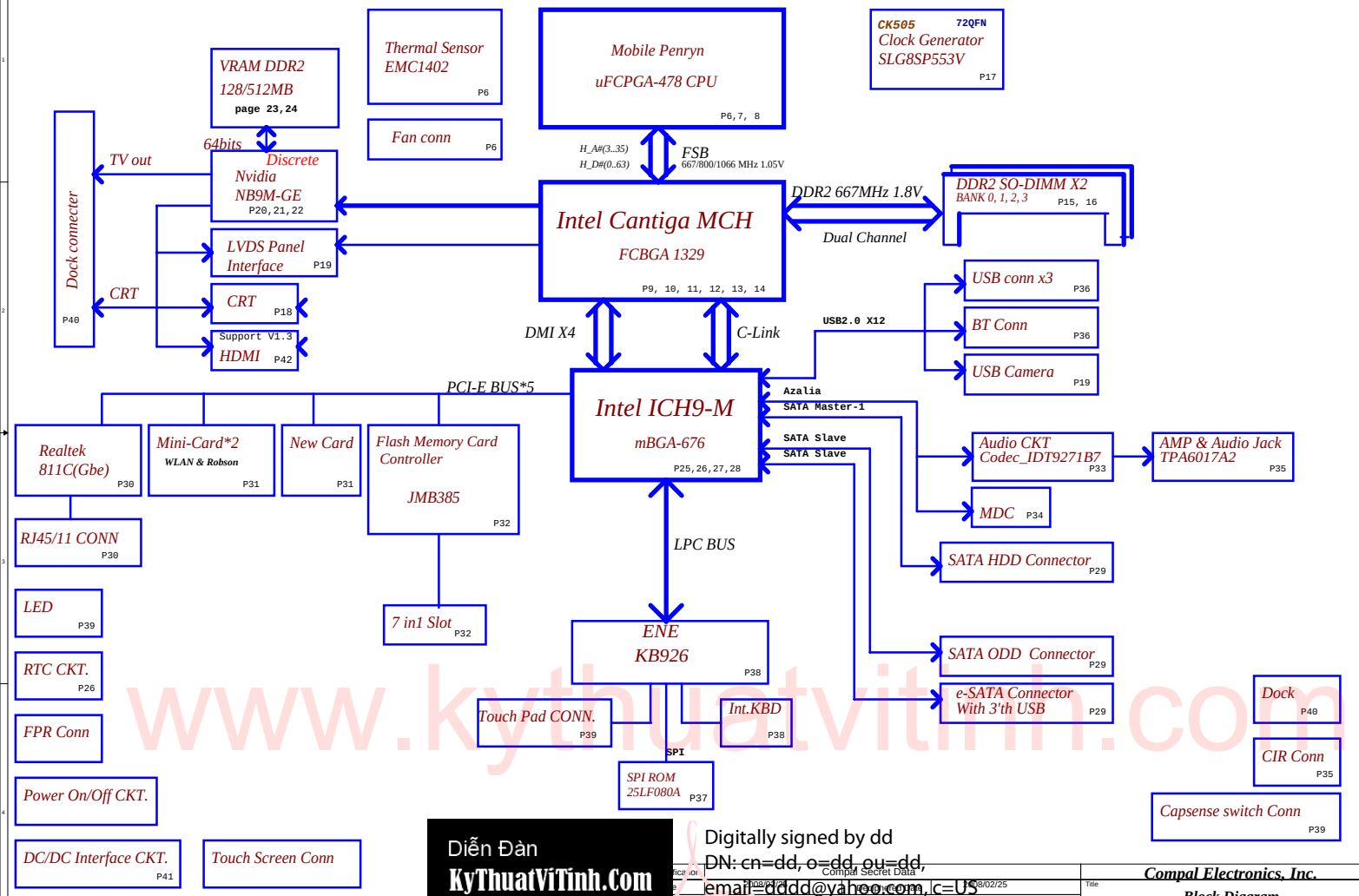

www.kythuatvitinh.com

Diễn Đàn
KyThuatViTinh.Com

Digitally signed by dd
DN: cn=dd, o=dd, ou=dd,
email=dddd@yahoo.com, c=US
Date: 2009.11.12 09:18:54 +07'00'

Compal Secret Data

Compal Electronics, Inc.			
Title: Block Diagram			
Size: Custom	Document Number: LA-4102P Blade discrete		Rev: 0.4
Date: Monday, February 25, 2008	Sheet 2 of 53		

ENGINEERING DRAWING IS THE PROPRIETARY PROPERTY OF COMPAL ELECTRONICS, INC. AND CONTAINS CONFIDENTIAL AND TRADE SECRET INFORMATION. THIS SHEET MAY NOT BE TRANSFERRED FROM THE POSSESSION OF THE COMPETENT DIVISION OF R&D EXCEPT AS AUTHORIZED BY COMPAL ELECTRONICS, INC. NEITHER THIS SHEET NOR THE INFORMATION IT CONTAINS MAY BE REPRODUCED OR DISCLOSED TO ANY THIRD PARTY WITHOUT PRIOR WRITTEN CONSENT OF COMPAL ELECTRONICS, INC.

Voltage Rails

O MEANS ON

X MEANS OFF

power plane / State	+B	+5VALW +3VALW	+1.8V	+5VS +3VS +1.5VS +0.9V +VCCP +CPU_CORE +2.5VS +1.8VS +NVVDD +PCIE
S0	O	O	O	O
S1	O	O	O	O
S3	O	O	O	X
S5 S4/AC	O	O	X	X
S5 S4/ Battery only	O	X	X	X
S5 S4/AC & Battery don't exist	X	X	X	X

Symbol Note :

: means Digital Ground

: means Analog Ground

@ : means just reserve , no build
DEBUG@ : means just reserve for debug.

USB assignment:

USB-0 Right side
USB-1 Right side
USB-2 Left side(with ESATA)
USB-3 Dock
USB-4 Camera
USB-5 WLAN
USB-6 Bluetooth
USB-7 Finger Printer
USB-8 MiniCard(WWAN/TV)
USB-9 Express card
USB-10 X
USB-11 X

PCIe assignment:

PCIe-1 TV tuner/WWAN/Robeson
PCIe-2 X
PCIe-3 WLAN
PCIe-4 GLAN (Marvell)
PCIe-5 Card reader
PCIe-6 New Card

SMBUS Control Table

	SOURCE	INVERTER	BATT	SERIAL EEPROM	Thermal Sensor	SODIMM	CLK CHIP	MINI CARD	Sensor board	NB9M Thermal Sensor	NB9M	G-sensor
SMB_EC_CK1 SMB_EC_DA1	KB926	X	V	V	X	X	X	X	V	X	X	X
SMB_EC_CK2 SMB_EC_DA2	KB926	X	X	X	V	X	X	X	X	V	V	X
ICH_SMBCLK ICH_SMBDATA	ICH9	X	X	X	X	V	V	V	X	X	X	V

NB9M SMBUS Control Table

	SOURCE	LVDS	CRT	HDMI
DDC2_DATA DDC2_CLK	NB9M	V	X	X
3VDDCDA 3VDDCCL	NB9M	X	V	X
HDMIDAT_VGA HDMICLK_VGA	NB9M	X	X	V

www.kythuatvitinh.com

I2C / SMBUS ADDRESSING

DEVICE	HEX	ADDRESS
DDR SO-DIMM 0	A0	1 0 1 0 0 0 0 0
DDR SO-DIMM 1	A4	1 0 1 0 0 1 0 0
CLOCK GENERATOR (EXT.)	D2	1 1 0 1 0 0 1 0

Security Classification	Compal Secret Data		
Issued Date	2008/02/25	Deciphered Date	2008/02/25

THIS SHEET OF ENGINEERING DRAWING IS THE PROPRIETARY PROPERTY OF COMPAL ELECTRONICS, INC. AND CONTAINS CONFIDENTIAL AND TRADE SECRET INFORMATION. THIS SHEET MAY NOT BE TRANSFERED FROM THE CUSTODY OF THE COMPETENT DIVISION OF R&D DEPARTMENT EXCEPT AS AUTHORIZED BY COMPAL ELECTRONICS, INC. NEITHER THIS SHEET NOR THE INFORMATION IT CONTAINS MAY BE USED BY OR DISCLOSED TO ANY THIRD PARTY WITHOUT PRIOR WRITTEN CONSENT OF COMPAL ELECTRONICS, INC.

Compal Electronics, Inc.

Title: Notes List

Size: Custom | Document Number: LA-4102P Blade discrete | Rev: 0.4

Date: Monday, February 25, 2008 | Sheet 3 of 53

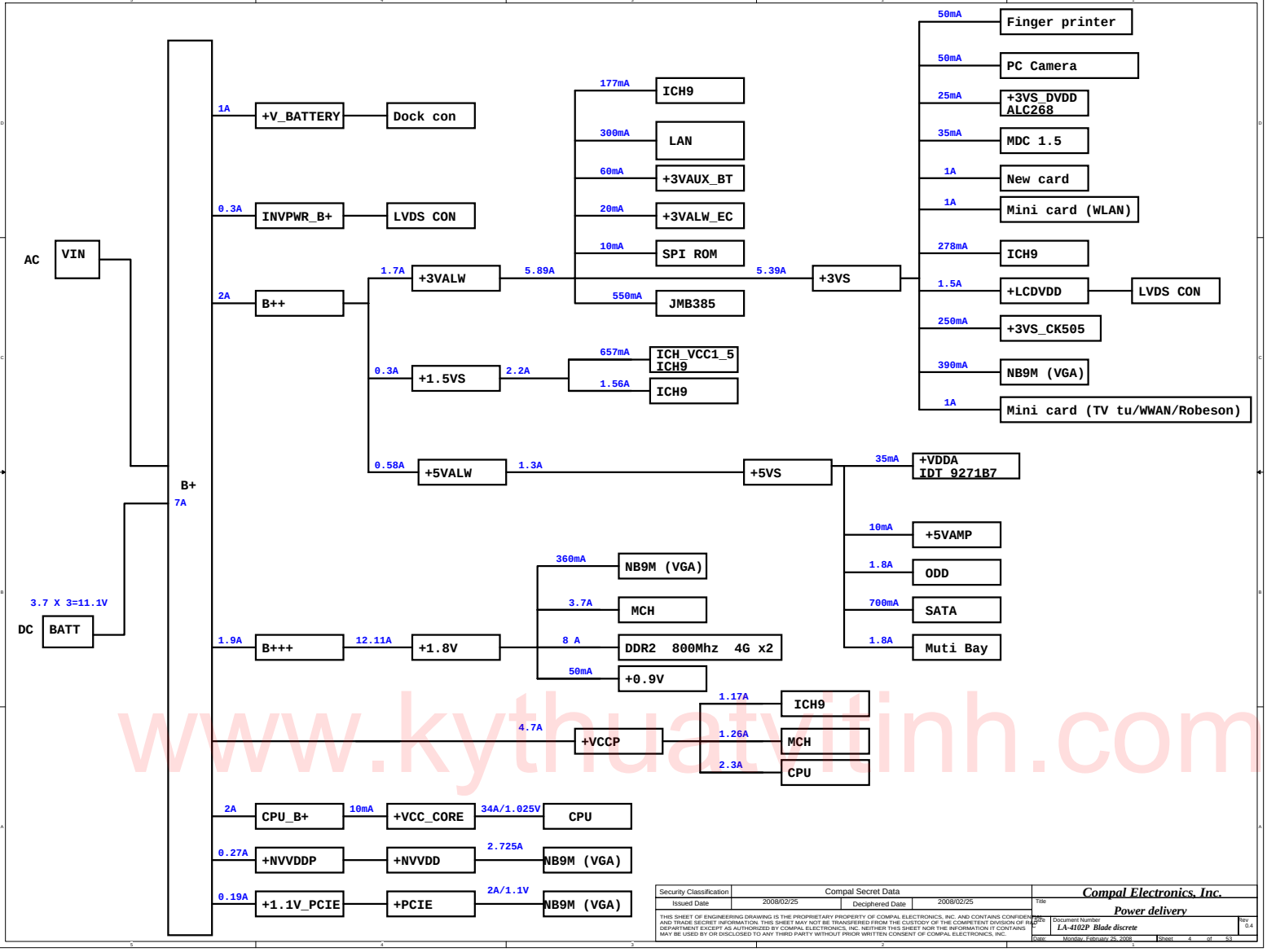

www.kythuatvitinh.com

Security Classification	Compal Secret Data		
Issued Date	2008/02/25	Deciphered Date	2008/02/25

THIS SHEET OF ENGINEERING DRAWING IS THE PROPRIETARY PROPERTY OF COMPAL ELECTRONICS, INC. AND CONTAINS CONFIDENTIAL AND TRADE SECRET INFORMATION. THIS SHEET MAY NOT BE TRANSFERED FROM THE CUSTODY OF THE COMPETENT DIVISION OF R&D DEPARTMENT EXCEPT AS AUTHORIZED BY COMPAL ELECTRONICS, INC. NEITHER THIS SHEET NOR THE INFORMATION IT CONTAINS MAY BE USED BY OR DISCLOSED TO ANY THIRD PARTY WITHOUT PRIOR WRITTEN CONSENT OF COMPAL ELECTRONICS, INC.

Compal Electronics, Inc.

Title: Power delivery

Size: A | Document Number: LA-4102P Blade discrete | Rev: 0.4

Date: Monday, February 25, 2008 | Sheet 4 of 53

JAL50 Discrete power sequence AC mode

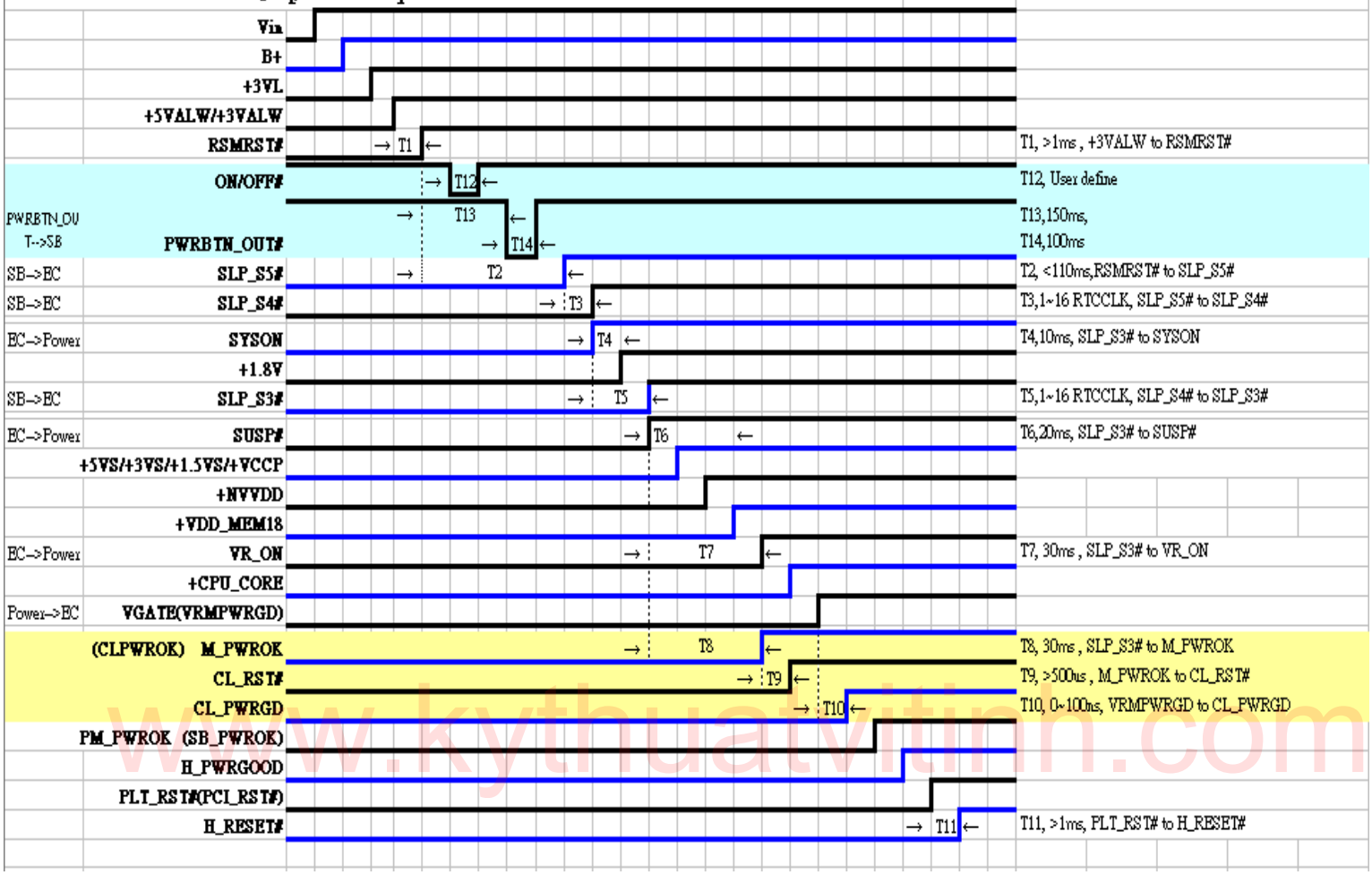

www.kythuatvitinh.com

Security Classification	Compal Secret Data		
Issued Date	2008/02/25	Deciphered Date	2008/02/25

THIS SHEET OF ENGINEERING DRAWING IS THE PROPRIETARY PROPERTY OF COMPAL ELECTRONICS, INC. AND CONTAINS CONFIDENTIAL AND TRADE SECRET INFORMATION. THIS SHEET MAY NOT BE TRANSFERED FROM THE CUSTODY OF THE COMPETENT DIVISION OF R&D DEPARTMENT EXCEPT AS AUTHORIZED BY COMPAL ELECTRONICS, INC. NEITHER THIS SHEET NOR THE INFORMATION IT CONTAINS MAY BE USED BY OR DISCLOSED TO ANY THIRD PARTY WITHOUT PRIOR WRITTEN CONSENT OF COMPAL ELECTRONICS, INC.

Compal Electronics, Inc.

Title: **Power sequence**

Size: Custom | Document Number: *LA-4102P Blade discrete* | Rev: 0.4

Date: Monday, February 25, 2008 | Sheet 5 of 53

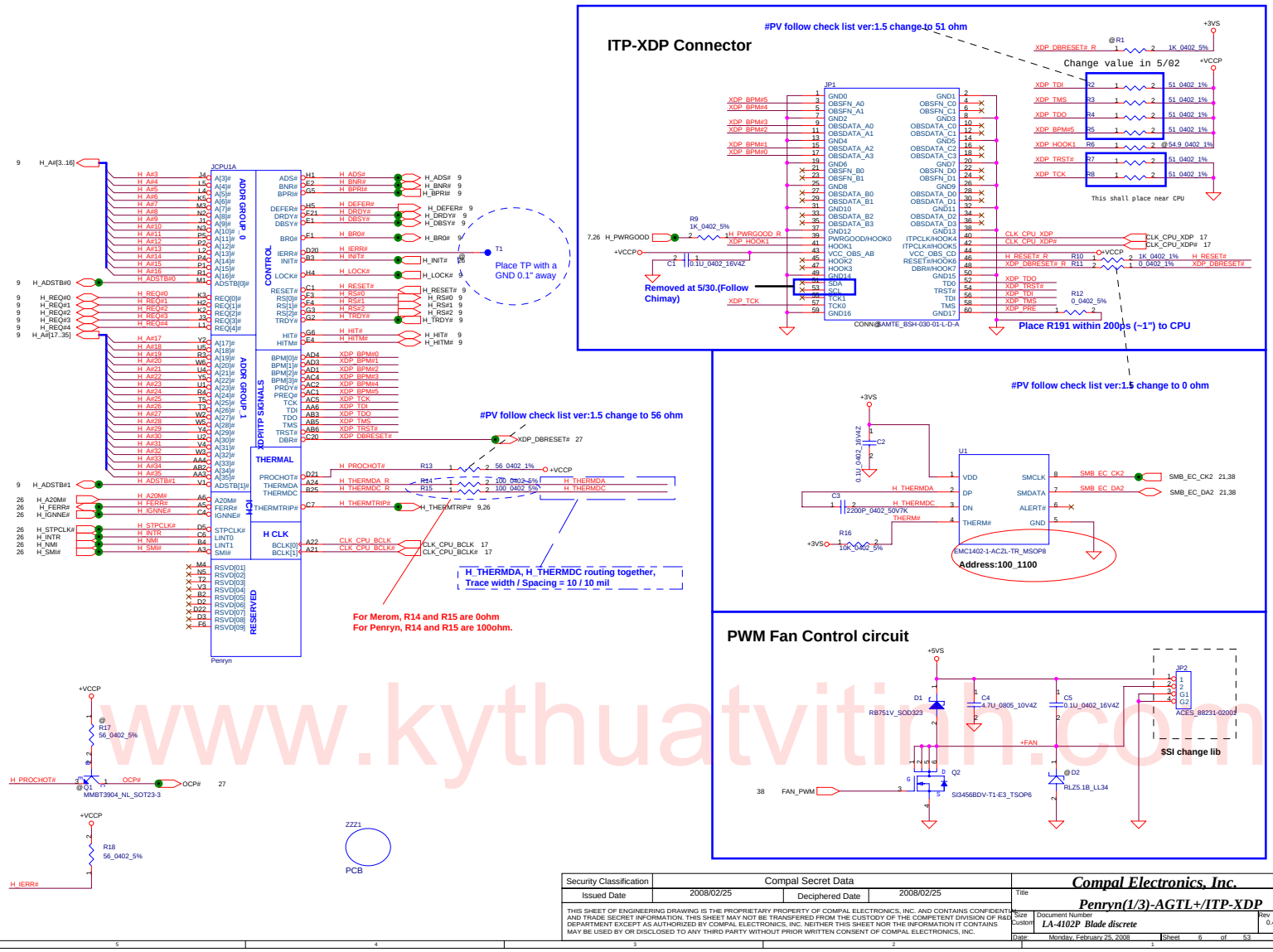

www.kythuatvitinh.com

Security Classification	Compal Secret Data		
Issued Date	2008/02/25	Deciphered Date	2008/02/25

THIS SHEET OF ENGINEERING DRAWING IS THE PROPRIETARY PROPERTY OF COMPAL ELECTRONICS, INC. AND CONTAINS CONFIDENTIAL AND TRADE SECRET INFORMATION. THIS SHEET MAY NOT BE TRANSFERED FROM THE CUSTODY OF THE COMPETENT DIVISION OF R&D DEPARTMENT EXCEPT AS AUTHORIZED BY COMPAL ELECTRONICS, INC. NEITHER THIS SHEET NOR THE INFORMATION IT CONTAINS MAY BE USED BY OR DISCLOSED TO ANY THIRD PARTY WITHOUT PRIOR WRITTEN CONSENT OF COMPAL ELECTRONICS, INC.

Compal Electronics, Inc.

Title: Penryn(1/3)-AGTL+/ITP-XDP

Size: Custom | Document Number: LA-4102P Blade discrete | Rev: 0.4

Date: Monday, February 25, 2008 | Sheet 6 of 53

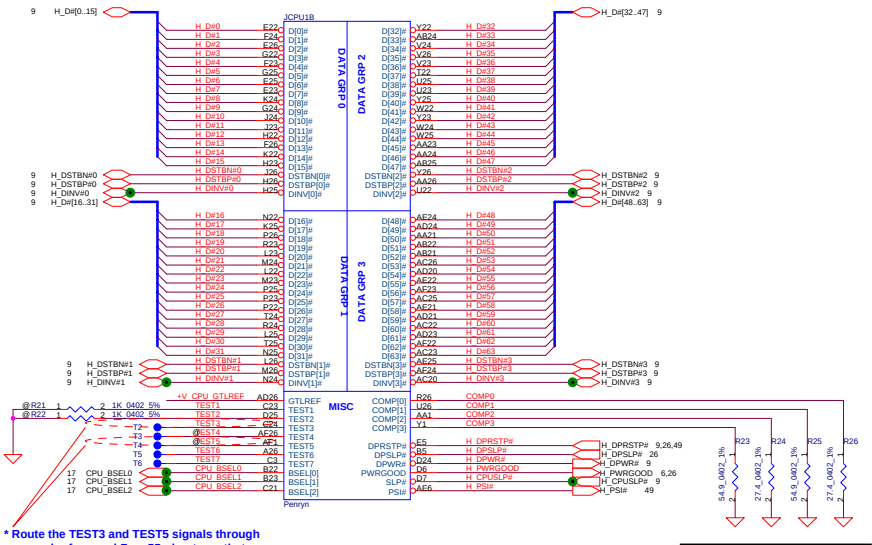

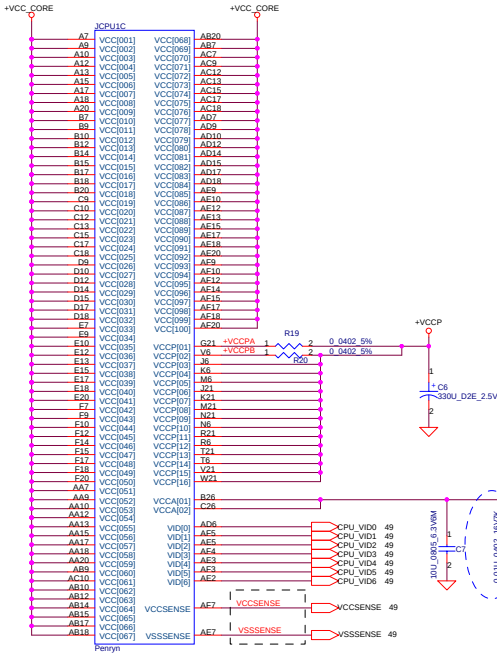

*** Route the TEST3 and TEST5 signals through a ground referenced Zo = 55-ohm trace that ends in a via that is near a GND via and is accessible through an oscilloscope connection.**

CPU_BSEL	CPU_BSEL2	CPU_BSEL1	CPU_BSEL0
166	0	1	1
200	0	1	0
266	0	0	0

Resistor placed within 0.5" of CPU pin.Trace should be at least 25 mils away from any other toggling signal. COMP[0,2] trace width is 18 mils. COMP[1,3] trace width is 4 mils.

Near pin B26

Length match within 25 mils. The trace width/space/other is 20/7/25.

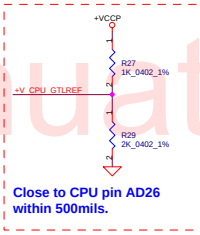

Close to CPU pin AD26 within 500mils.

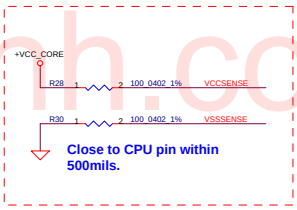

Close to CPU pin within 500mils.

www.kythuatvitinh.com

Security Classification	Compal Secret Data		
Issued Date	2008/02/25	Deciphered Date	2008/02/25

THIS SHEET OF ENGINEERING DRAWING IS THE PROPRIETARY PROPERTY OF COMPAL ELECTRONICS, INC. AND CONTAINS CONFIDENTIAL AND TRADE SECRET INFORMATION. THIS SHEET MAY NOT BE TRANSFERRED FROM THE CUSTODY OF THE COMPETENT DIVISION OF R&D DEPARTMENT EXCEPT AS AUTHORIZED BY COMPAL ELECTRONICS, INC. NEITHER THIS SHEET NOR THE INFORMATION IT CONTAINS MAY BE USED BY OR DISCLOSED TO ANY THIRD PARTY WITHOUT PRIOR WRITTEN CONSENT OF COMPAL ELECTRONICS, INC.

Compal Electronics, Inc.

Title: **Penryn(2/3)-AGTL+/ITP-XDP**

Size: Custom | Document Number: **LA-4102P Blade discrete** | Rev: 0.4

Date: Monday, February 25, 2008 | Sheet 7 of 53

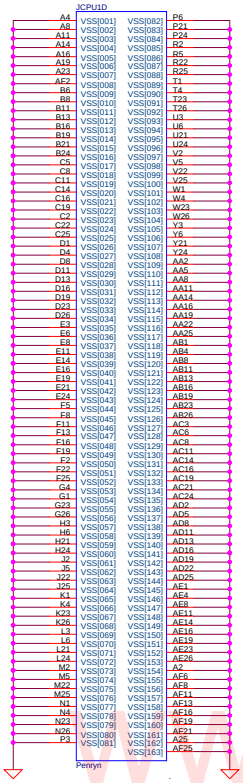

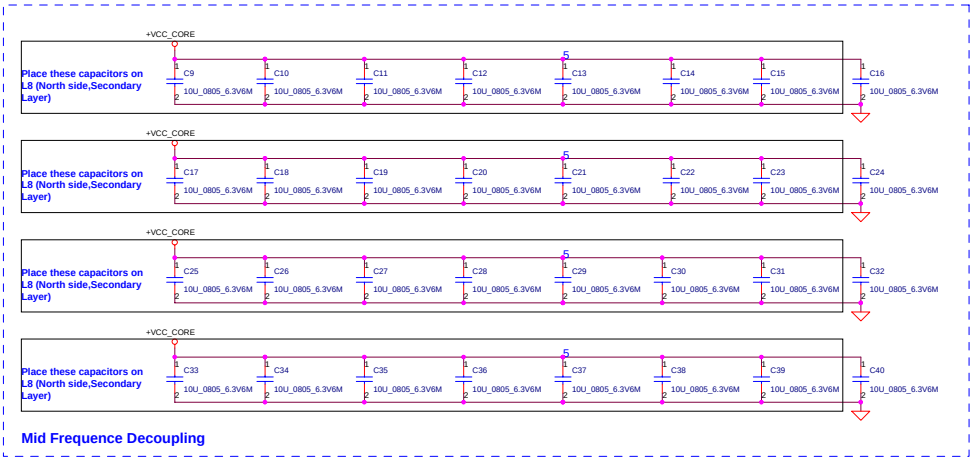

Near CPU CORE regulator

ESR <= 1.5m ohm
Capacitor > 1980uF

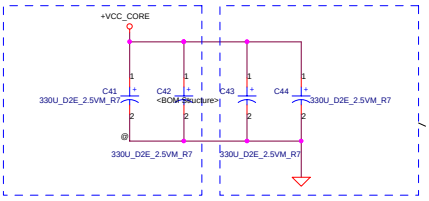

#SI change to 7m ohm

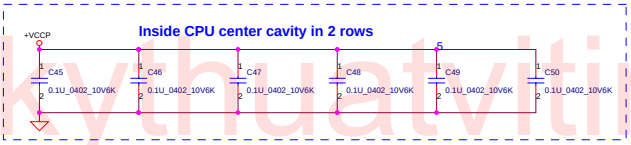

www.kythuatvitinh.com

Security Classification	Compal Secret Data			Compal Electronics, Inc.
Issued Date	2008/02/25	Deciphered Date	2008/02/25	Title: Penryn(3/3)-AGTL+/ITP-XDP

THIS SHEET OF ENGINEERING DRAWING IS THE PROPRIETARY PROPERTY OF COMPAL ELECTRONICS, INC. AND CONTAINS CONFIDENTIAL AND TRADE SECRET INFORMATION. THIS SHEET MAY NOT BE TRANSFERED FROM THE CUSTODY OF THE COMPETENT DIVISION OF R&D DEPARTMENT EXCEPT AS AUTHORIZED BY COMPAL ELECTRONICS, INC. NEITHER THIS SHEET NOR THE INFORMATION IT CONTAINS MAY BE USED BY OR DISCLOSED TO ANY THIRD PARTY WITHOUT PRIOR WRITTEN CONSENT OF COMPAL ELECTRONICS, INC.

Size	Document Number	Rev
Custom	LA-4102P Blade discrete	0.4

Date: Monday, February 25, 2008 Sheet 8 of 53

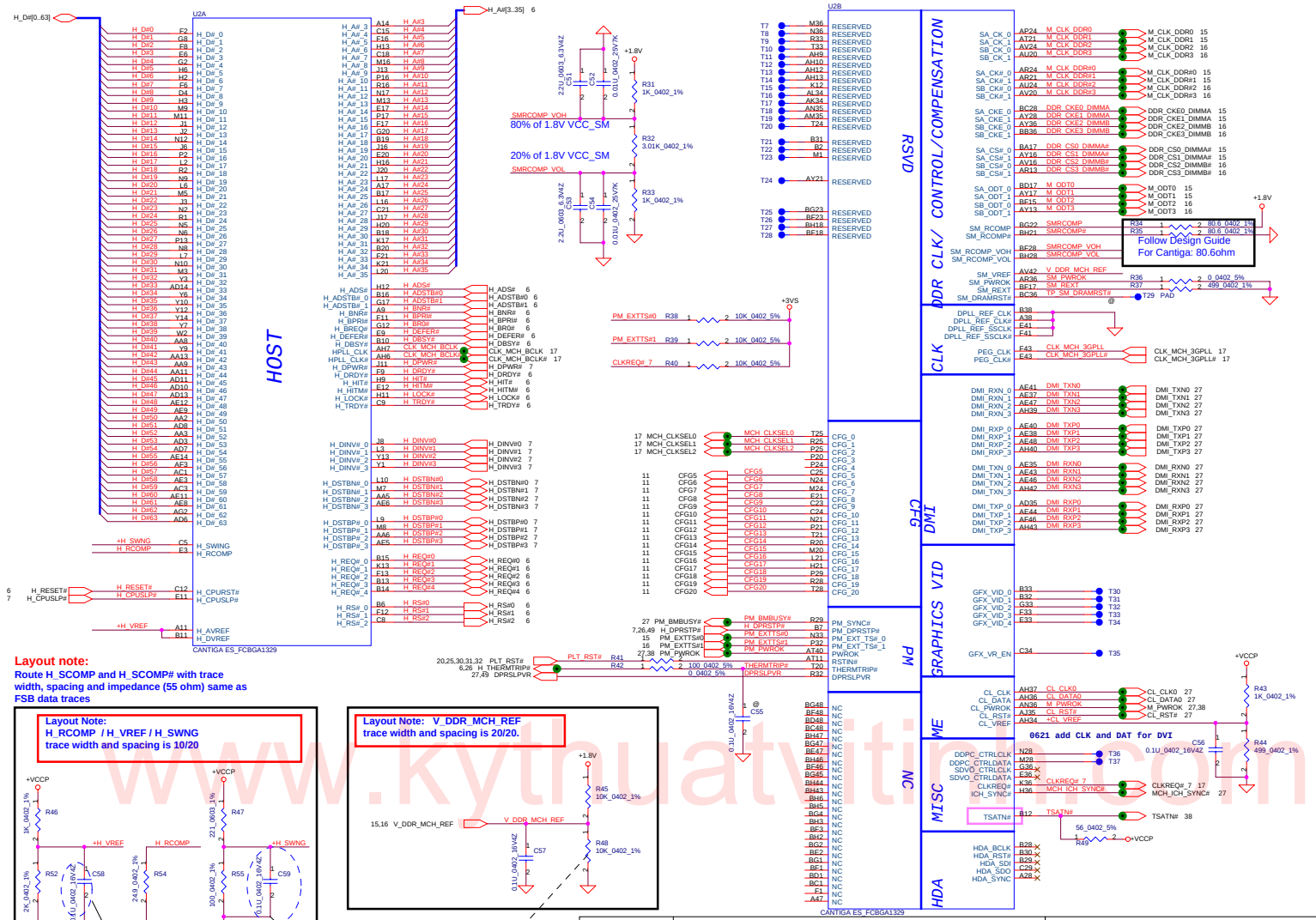

Layout note:
Route H_SCOMP and H_SCOMP# with trace width, spacing and impedance (55 ohm) same as FSB data traces

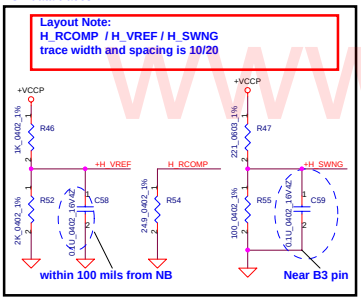

#PV follow check list ver:1.5 change to 10K ohm

www.kythuatvitinh.com

Security Classification	Compal Secret Data		
Issued Date	2008/02/25	Deciphered Date	2008/02/25

THIS SHEET OF ENGINEERING DRAWING IS THE PROPRIETARY PROPERTY OF COMPAL ELECTRONICS, INC. AND CONTAINS CONFIDENTIAL AND TRADE SECRET INFORMATION. THIS SHEET MAY NOT BE TRANSFERED FROM THE CUSTODY OF THE COMPETENT DIVISION OF R&D DEPARTMENT EXCEPT AS AUTHORIZED BY COMPAL ELECTRONICS, INC. NEITHER THIS SHEET NOR THE INFORMATION IT CONTAINS MAY BE USED BY OR DISCLOSED TO ANY THIRD PARTY WITHOUT PRIOR WRITTEN CONSENT OF COMPAL ELECTRONICS, INC.

Compal Electronics, Inc.

Title: Cantiga(1/6)-AGTL/DMI/DDR

Size: Custom | Document Number: LA-4102P Blade discrete | Rev: 0.4

Date: Monday, February 25, 2008 | Sheet 9 of 53

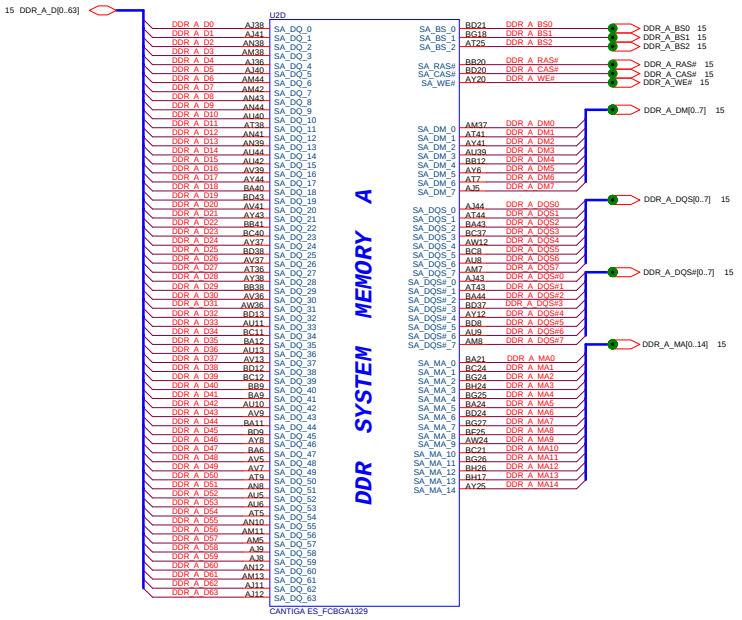

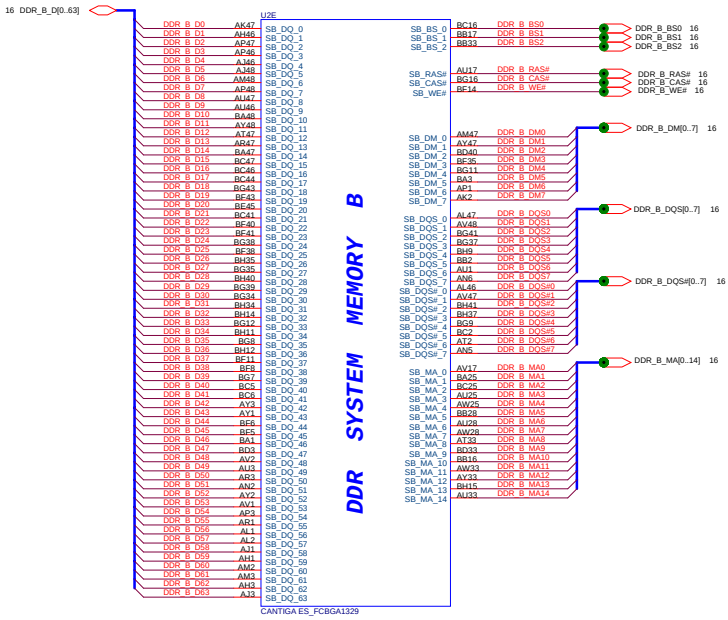

www.kythuatvitinh.com

Security Classification	Compal Secret Data		
Issued Date	2008/02/25	Deciphered Date	2008/02/25

THIS SHEET OF ENGINEERING DRAWING IS THE PROPRIETARY PROPERTY OF COMPAL ELECTRONICS, INC. AND CONTAINS CONFIDENTIAL AND TRADE SECRET INFORMATION. THIS SHEET MAY NOT BE TRANSFERED FROM THE CUSTODY OF THE COMPETENT DIVISION OF R&D DEPARTMENT EXCEPT AS AUTHORIZED BY COMPAL ELECTRONICS, INC. NEITHER THIS SHEET NOR THE INFORMATION IT CONTAINS MAY BE USED BY OR DISCLOSED TO ANY THIRD PARTY WITHOUT PRIOR WRITTEN CONSENT OF COMPAL ELECTRONICS, INC.

Compal Electronics, Inc.

Title: **Cantiga(2/6)-DDR2 A/B CH**

Size: Custom | Document Number: LA-4102P Blade discrete | Rev: 0.4

Date: Monday, February 25, 2008 | Sheet 10 of 53

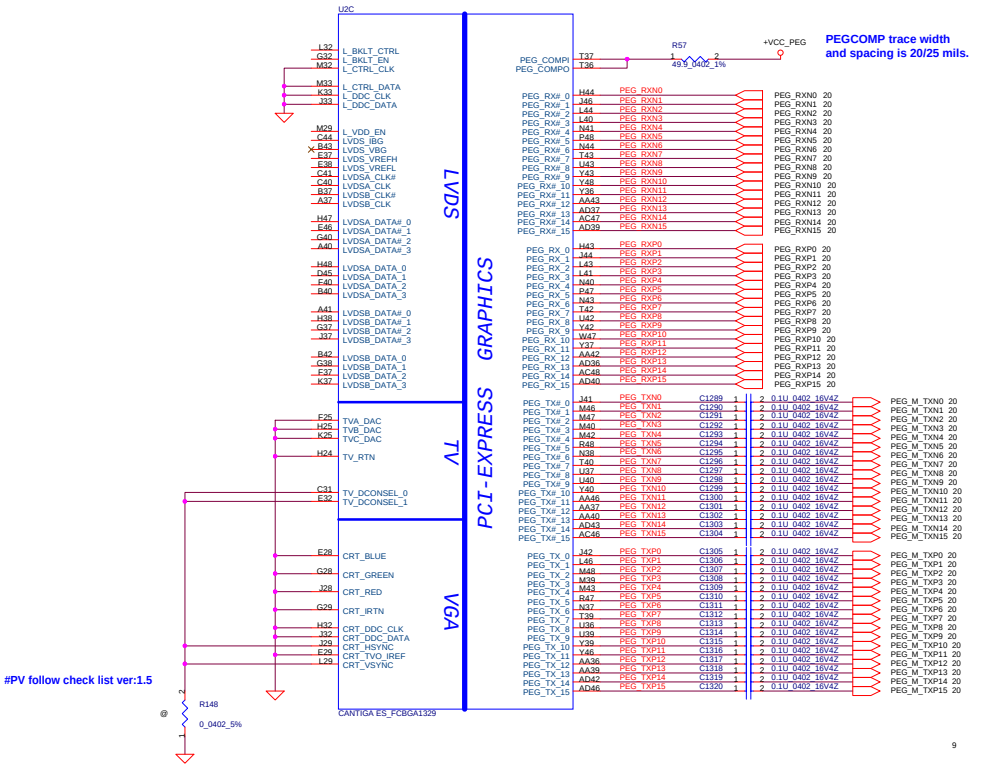

Strap Pin Table

CFG[2:0] FSB Freq select	000 = FSB 1066MHz 010 = FSB 800MHz 011 = FSB 667MHz Others = Reserved
CFG[4:3]	Reserved
CFG5 (DMI select)	0 = DMI x 2 1 = DMI x 4 *
CFG6	0 = The iTPM Host Interface is enable 1 = The iTPM Host Interface is disable *
CFG7 (Intel Management Engine Crypto strap)	0 =(TLS)chiper suite with no confidentiality 1 =(TLS)chiper suite with confidentiality *
CFG8	Reserved
CFG9 (PCIE Graphics Lane Reversal)	0 = Reverse Lane,15->0, 14->1 1 = Normal Operation,Lane Number in order *
CFG10 (PCIE Lookback enable)	0 = Enable 1 = Disable *
CFG11	Reserved
CFG[13:12] (XOR/ALLZ)	00 = Reserved 01 = XOR Mode Enabled 10 = All Z Mode Enabled 11 = Normal Operation (Default) *
CFG[15:14]	Reserved
CFG16 (FSB Dynamic ODT)	0 = Disabled 1 = Enabled *
CFG[18:17]	Reserved
CFG19 (DMI Lane Reversal)	0 = Normal Operation (Lane number in Order) * 1 = Reverse Lane
CFG20 (PCIE/SDVO concurrent)	0 = Only PCIE or SDVO is operational. * 1 = PCIE/SDVO are operating simu.

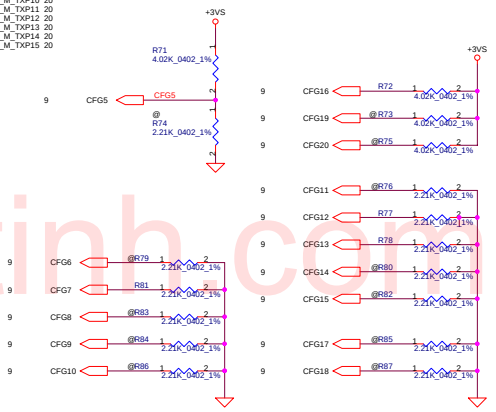

www.kythuatvitinh.com

Security Classification	Compal Secret Data		
Issued Date	2008/02/25	Deciphered Date	2008/02/25

THIS SHEET OF ENGINEERING DRAWING IS THE PROPRIETARY PROPERTY OF COMPAL ELECTRONICS, INC. AND CONTAINS CONFIDENTIAL AND TRADE SECRET INFORMATION. THIS SHEET MAY NOT BE TRANSFERED FROM THE CUSTODY OF THE COMPETENT DIVISION OF R&D DEPARTMENT EXCEPT AS AUTHORIZED BY COMPAL ELECTRONICS, INC. NEITHER THIS SHEET NOR THE INFORMATION IT CONTAINS MAY BE USED BY OR DISCLOSED TO ANY THIRD PARTY WITHOUT PRIOR WRITTEN CONSENT OF COMPAL ELECTRONICS, INC.

Compal Electronics, Inc.

Title: *Cantiga(3/6)-VGA/LVDS/TV*

Size: Custom | Document Number: *LA-4102P Blade discrete* | Rev: 0.4

Date: Monday, February 25, 2008 | Sheet 11 of 53

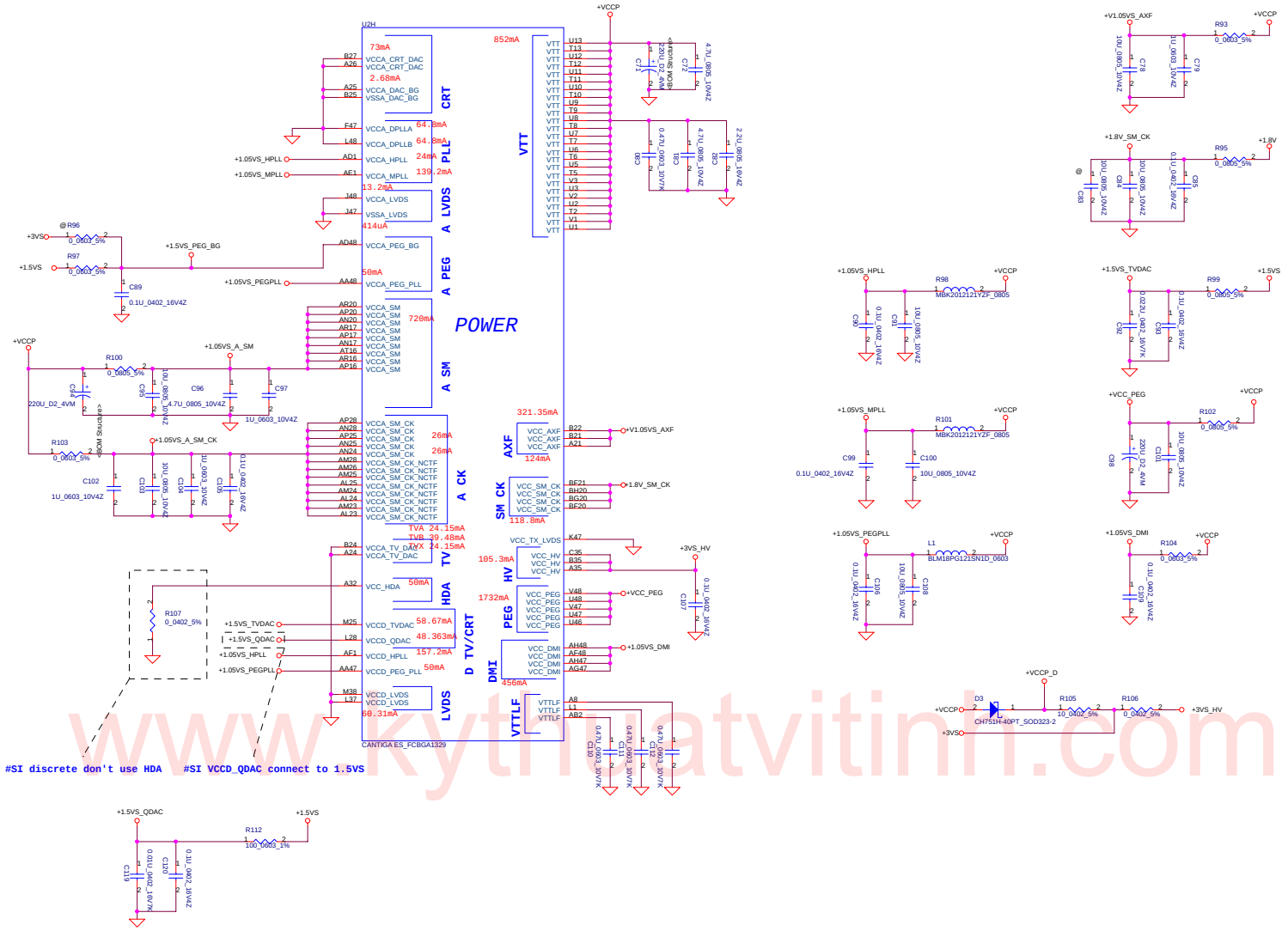

Security Classification	Compal Secret Data		
Issued Date	2008/02/25	Deciphered Date	2008/02/25

THIS SHEET OF ENGINEERING DRAWING IS THE PROPRIETARY PROPERTY OF COMPAL ELECTRONICS, INC. AND CONTAINS CONFIDENTIAL AND TRADE SECRET INFORMATION. THIS SHEET MAY NOT BE TRANSFERED FROM THE CUSTODY OF THE COMPETENT DIVISION OF R&D DEPARTMENT EXCEPT AS AUTHORIZED BY COMPAL ELECTRONICS, INC. NEITHER THIS SHEET NOR THE INFORMATION IT CONTAINS MAY BE USED BY OR DISCLOSED TO ANY THIRD PARTY WITHOUT PRIOR WRITTEN CONSENT OF COMPAL ELECTRONICS, INC.

Compal Electronics, Inc.

Title: **Cantiga(4/6)-PWR**

Size: Custom | Document Number: **LA-4102P Blade discrete** | Rev: 0.4

Date: Monday, February 25, 2008 | Sheet 12 of 53

www.kythuatvitinh.com

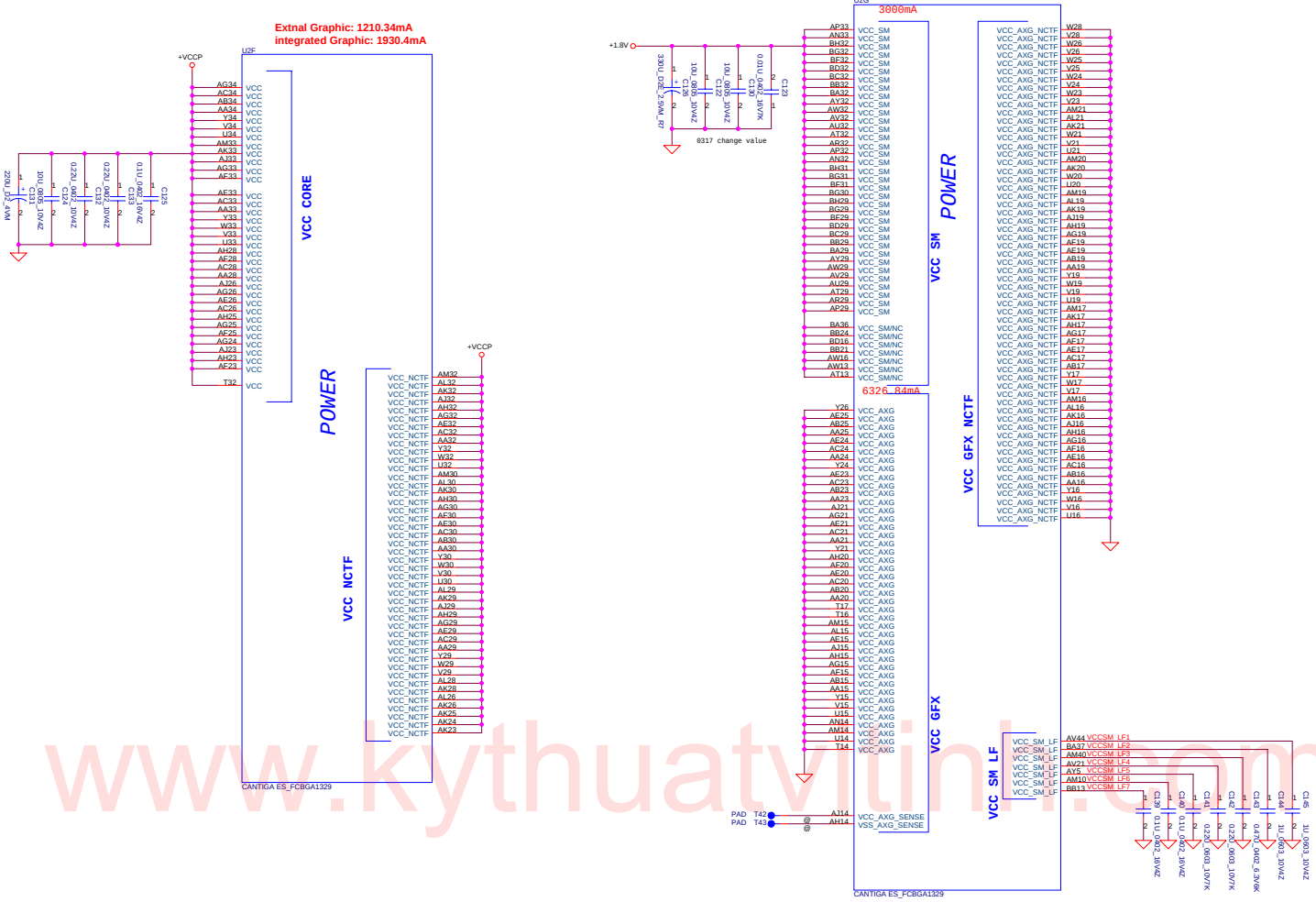

www.kythuatvitinh.com

Security Classification	Compal Secret Data			Compal Electronics, Inc.
Issued Date	2008/02/25	Deciphered Date	2008/02/25	Title: Cantiga(5/6)-PWR/GND
				Size: Custom; Document Number: LA-4102P Blade discrete; Rev: 0.4
				Date: Monday, February 25, 2008; Sheet 13 of 53

THIS SHEET OF ENGINEERING DRAWING IS THE PROPRIETARY PROPERTY OF COMPAL ELECTRONICS, INC. AND CONTAINS CONFIDENTIAL AND TRADE SECRET INFORMATION. THIS SHEET MAY NOT BE TRANSFERED FROM THE CUSTODY OF THE COMPETENT DIVISION OF R&D DEPARTMENT EXCEPT AS AUTHORIZED BY COMPAL ELECTRONICS, INC. NEITHER THIS SHEET NOR THE INFORMATION IT CONTAINS MAY BE USED BY OR DISCLOSED TO ANY THIRD PARTY WITHOUT PRIOR WRITTEN CONSENT OF COMPAL ELECTRONICS, INC.

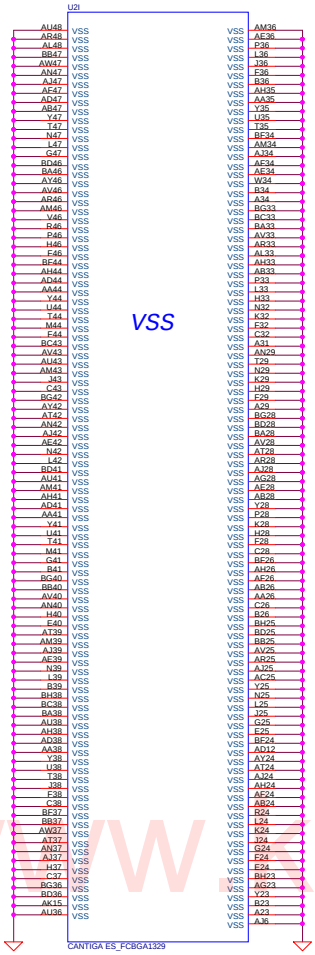

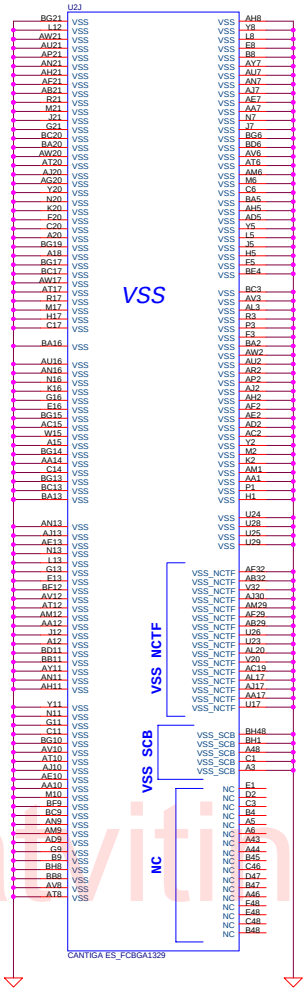

www.kythuatvitinh.com

Security Classification	Compal Secret Data		
Issued Date	2008/02/25	Deciphered Date	2008/02/25

THIS SHEET OF ENGINEERING DRAWING IS THE PROPRIETARY PROPERTY OF COMPAL ELECTRONICS, INC. AND CONTAINS CONFIDENTIAL AND TRADE SECRET INFORMATION. THIS SHEET MAY NOT BE TRANSFERED FROM THE CUSTODY OF THE COMPETENT DIVISION OF R&D DEPARTMENT EXCEPT AS AUTHORIZED BY COMPAL ELECTRONICS, INC. NEITHER THIS SHEET NOR THE INFORMATION IT CONTAINS MAY BE USED BY OR DISCLOSED TO ANY THIRD PARTY WITHOUT PRIOR WRITTEN CONSENT OF COMPAL ELECTRONICS, INC.

Compal Electronics, Inc.

Title: **Cantiga(6/6)-PWR/GND**

Size: Custom | Document Number: LA-4102P Blade discrete | Rev: 0.4

Date: Monday, February 25, 2008 | Sheet 14 of 53

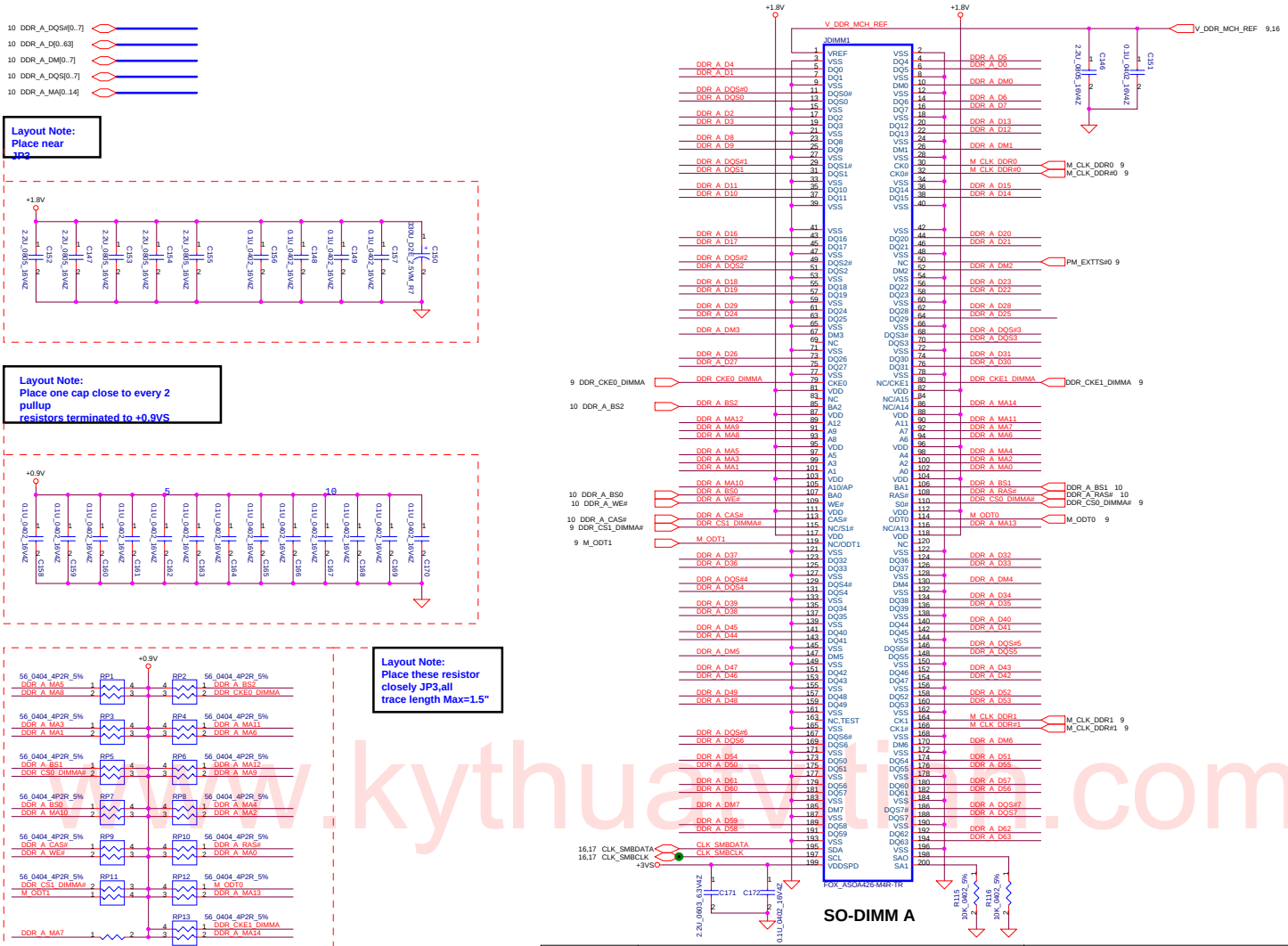

www.kythuatvitin.com

Security Classification	Compal Secret Data		
Issued Date	2008/02/25	Deciphered Date	2008/02/25

THIS SHEET OF ENGINEERING DRAWING IS THE PROPRIETARY PROPERTY OF COMPAL ELECTRONICS, INC. AND CONTAINS CONFIDENTIAL AND TRADE SECRET INFORMATION. THIS SHEET MAY NOT BE TRANSFERED FROM THE CUSTODY OF THE COMPETENT DIVISION OF R&D DEPARTMENT EXCEPT AS AUTHORIZED BY COMPAL ELECTRONICS, INC. NEITHER THIS SHEET NOR THE INFORMATION IT CONTAINS MAY BE USED BY OR DISCLOSED TO ANY THIRD PARTY WITHOUT PRIOR WRITTEN CONSENT OF COMPAL ELECTRONICS, INC.

Compal Electronics, Inc.

Title: DDRII-SODIMM SLOT1

Size: Custom | Document Number: LA-4102P Blade discrete | Rev: 0.4

Date: Monday, February 25, 2008 | Sheet 15 of 53

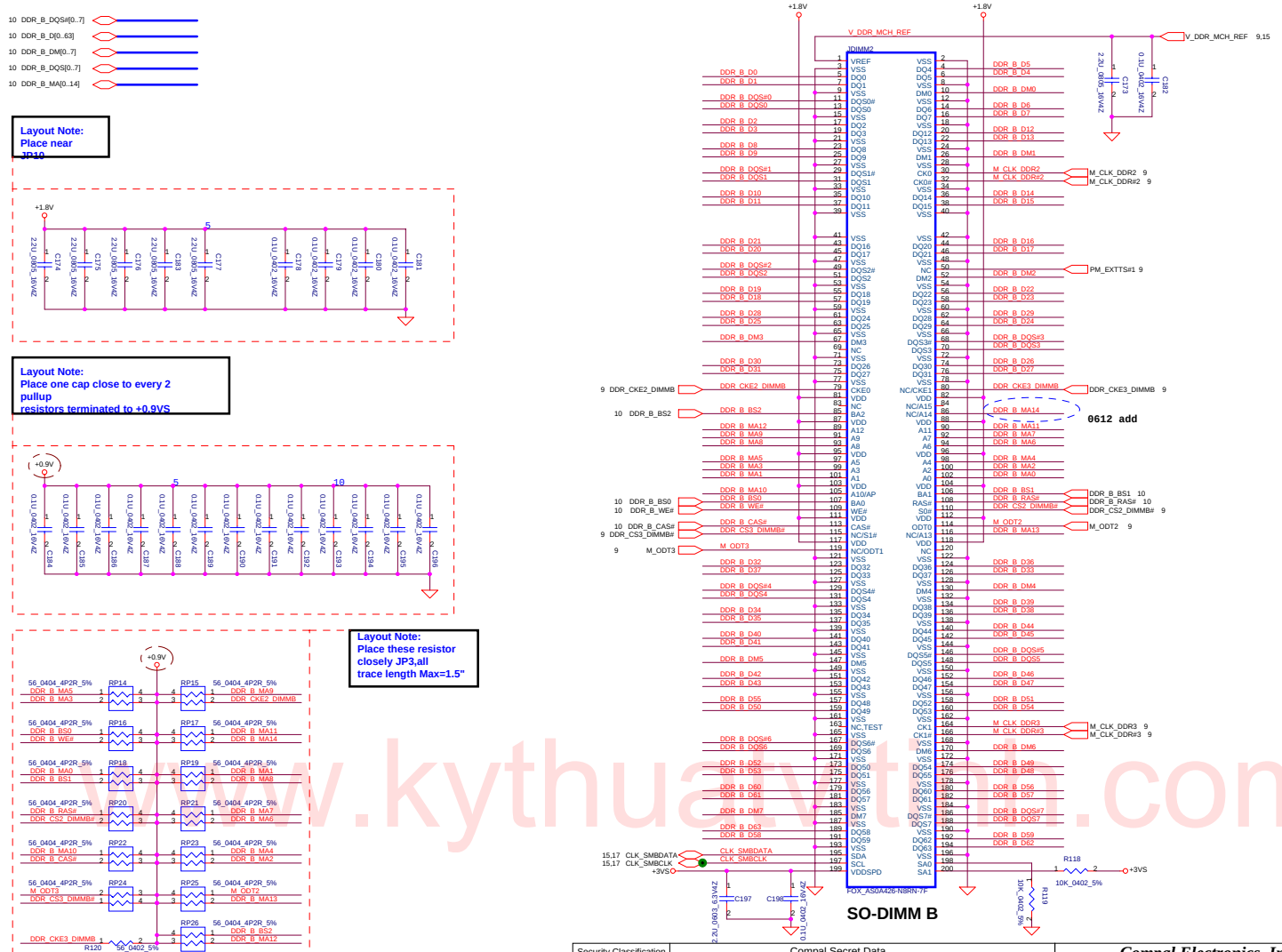

www.kythuatvitin.com

Security Classification	Compal Secret Data		
Issued Date	2008/02/25	Deciphered Date	2008/02/25

THIS SHEET OF ENGINEERING DRAWING IS THE PROPRIETARY PROPERTY OF COMPAL ELECTRONICS, INC. AND CONTAINS CONFIDENTIAL AND TRADE SECRET INFORMATION. THIS SHEET MAY NOT BE TRANSFERED FROM THE CUSTODY OF THE COMPETENT DIVISION OF R&D DEPARTMENT EXCEPT AS AUTHORIZED BY COMPAL ELECTRONICS, INC. NEITHER THIS SHEET NOR THE INFORMATION IT CONTAINS MAY BE USED BY OR DISCLOSED TO ANY THIRD PARTY WITHOUT PRIOR WRITTEN CONSENT OF COMPAL ELECTRONICS, INC.

Compal Electronics, Inc.

Title: DDRII-SODIMM SLOT2

Size | Document Number: LA-4102P Blade discrete | Rev: 0.4

Date: Monday, February 25, 2008 | Sheet 16 of 53

FSC CLKSEL2	FSB CLKSEL1	FSA CLKSEL0	CPU MHz	SRC MHz	PCI MHz	REF MHz	DOT_96 MHz	USB MHz
0	0	0	266	100	33.3	14.318	96.0	48.0
0	0	1	133	100	33.3	14.318	96.0	48.0
0	1	0	200	100	33.3	14.318	96.0	48.0
0	1	1	166	100	33.3	14.318	96.0	48.0
1	0	0	333	100	33.3	14.318	96.0	48.0
1	0	1	100	100	33.3	14.318	96.0	48.0
1	1	0	400	100	33.3	14.318	96.0	48.0
1	1	1	Reserved					

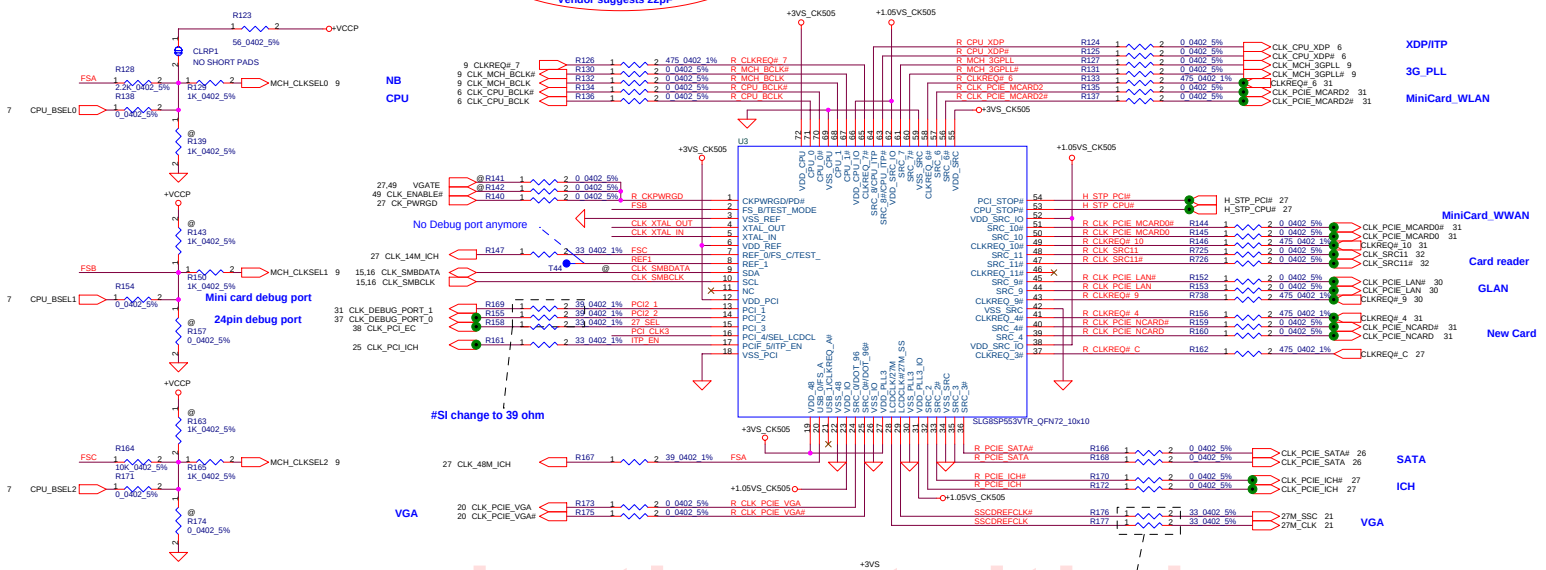

ITP_EN	0 = SRC8/SRC8# 1 = ITP/ITP#	V
PCI_CLK3	0 = Enable DOT96 & SRC1(UMA) 1 = Enable SRC0 & 27MHz(DIS)	V

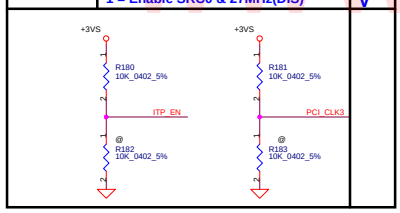

www.kythuatvitinh.com

Security Classification	Compal Secret Data		
Issued Date	2008/02/25	Deciphered Date	2008/02/25

THIS SHEET OF ENGINEERING DRAWING IS THE PROPRIETARY PROPERTY OF COMPAL ELECTRONICS, INC. AND CONTAINS CONFIDENTIAL AND TRADE SECRET INFORMATION. THIS SHEET MAY NOT BE TRANSFERED FROM THE CUSTODY OF THE COMPETENT DIVISION OF R&D DEPARTMENT EXCEPT AS AUTHORIZED BY COMPAL ELECTRONICS, INC. NEITHER THIS SHEET NOR THE INFORMATION IT CONTAINS MAY BE USED BY OR DISCLOSED TO ANY THIRD PARTY WITHOUT PRIOR WRITTEN CONSENT OF COMPAL ELECTRONICS, INC.

Compal Electronics, Inc.

Title: Clock Generator CK505

Size: | Document Number: LA-4102P Blade discrete | Rev: 0.4

Date: Monday, February 25, 2008 | Sheet 17 of 53

CRT Connector

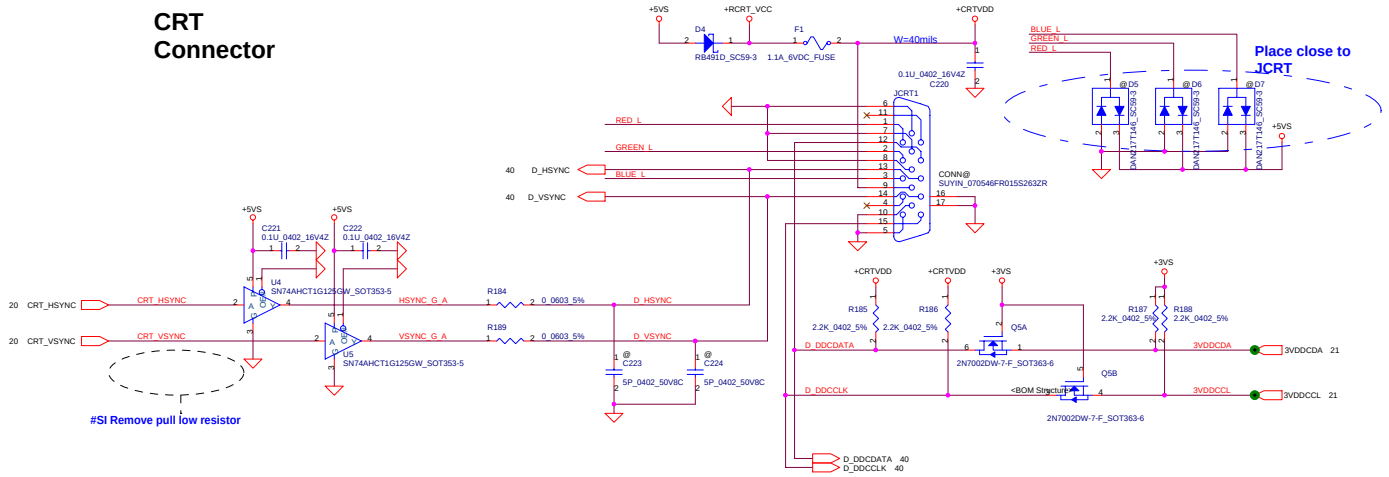

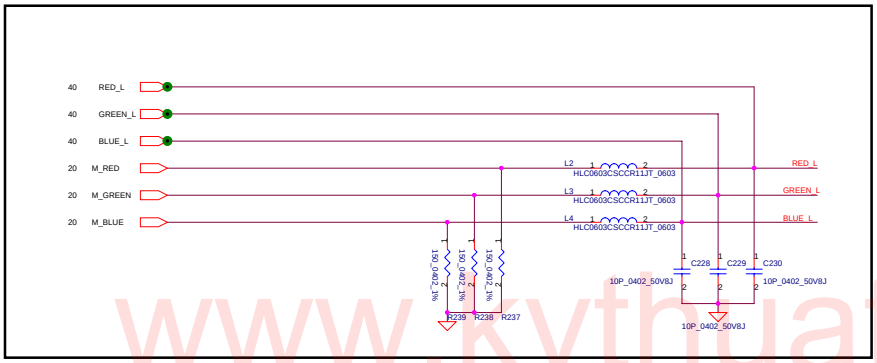

www.kythuatvitinh.com

Security Classification	Compal Secret Data			Compal Electronics, Inc.
Issued Date	2008/02/25	Deciphered Date	2008/02/25	Title: CRT Connector
				Size: Document Number: LA-4102P Blade discrete — Rev 0.4
				Date: Monday, February 25, 2008 — Sheet 18 of 53

THIS SHEET OF ENGINEERING DRAWING IS THE PROPRIETARY PROPERTY OF COMPAL ELECTRONICS, INC. AND CONTAINS CONFIDENTIAL AND TRADE SECRET INFORMATION. THIS SHEET MAY NOT BE TRANSFERED FROM THE CUSTODY OF THE COMPETENT DIVISION OF R&D DEPARTMENT EXCEPT AS AUTHORIZED BY COMPAL ELECTRONICS, INC. NEITHER THIS SHEET NOR THE INFORMATION IT CONTAINS MAY BE USED BY OR DISCLOSED TO ANY THIRD PARTY WITHOUT PRIOR WRITTEN CONSENT OF COMPAL ELECTRONICS, INC.

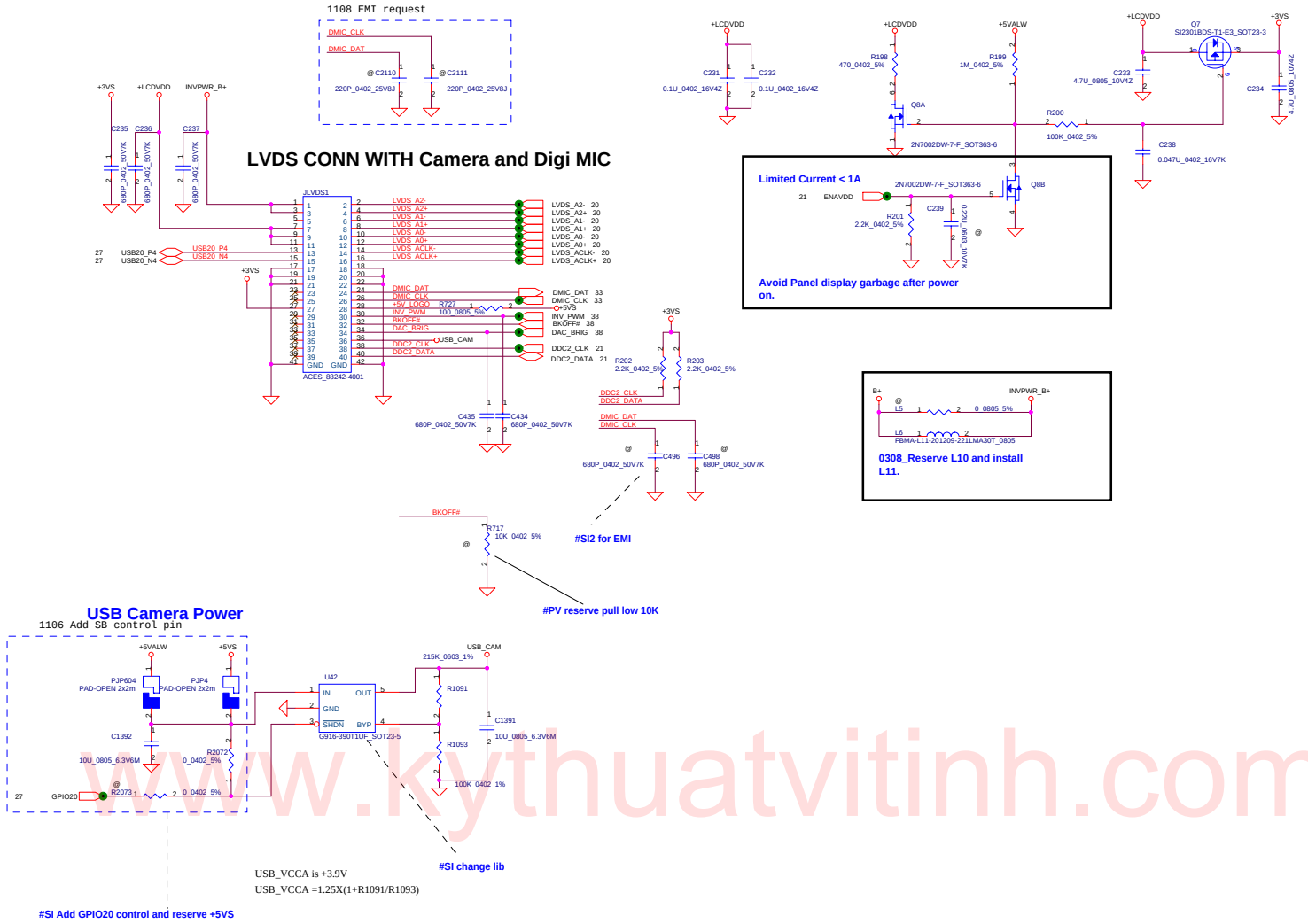

www.kythuatvitinh.com

Security Classification	Compal Secret Data		
Issued Date	2008/02/25	Deciphered Date	2008/02/25

THIS SHEET OF ENGINEERING DRAWING IS THE PROPRIETARY PROPERTY OF COMPAL ELECTRONICS, INC. AND CONTAINS CONFIDENTIAL AND TRADE SECRET INFORMATION. THIS SHEET MAY NOT BE TRANSFERED FROM THE CUSTODY OF THE COMPETENT DIVISION OF R&D DEPARTMENT EXCEPT AS AUTHORIZED BY COMPAL ELECTRONICS, INC. NEITHER THIS SHEET NOR THE INFORMATION IT CONTAINS MAY BE USED BY OR DISCLOSED TO ANY THIRD PARTY WITHOUT PRIOR WRITTEN CONSENT OF COMPAL ELECTRONICS, INC.

Compal Electronics, Inc.

Title: **LCD CONN.**

Size | Document Number: *LA-4102P Blade discrete* | Rev: 0.4

Date: Monday, February 25, 2008 | Sheet 19 of 53

LVDS & DAC Interface

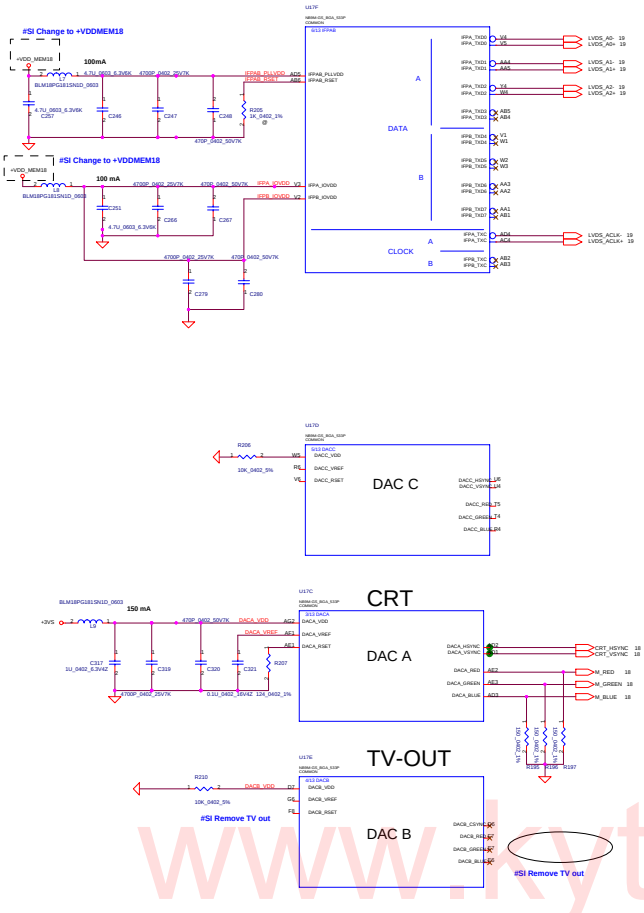

PEG Interface

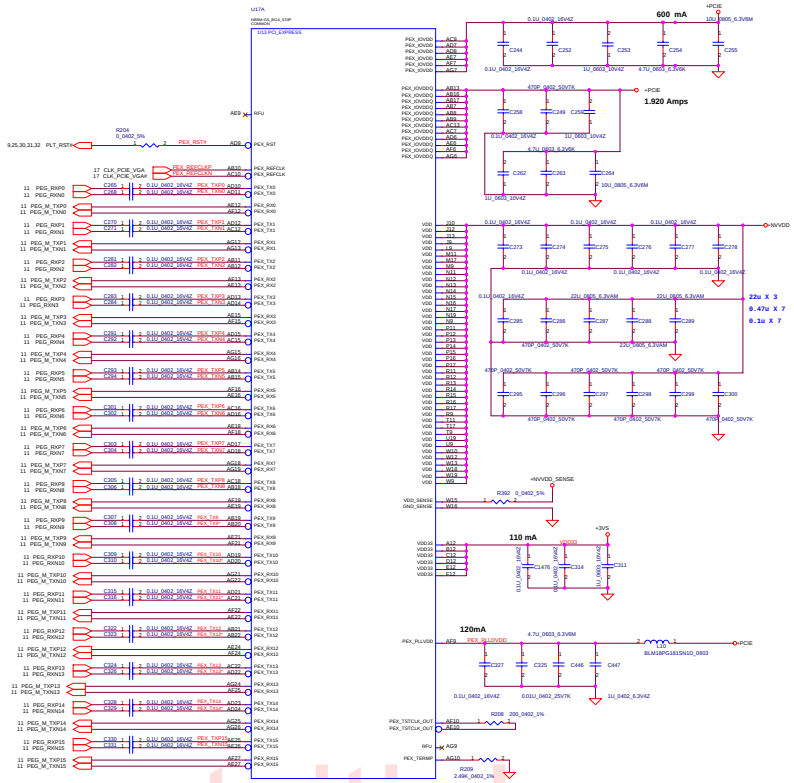

www.kythuatvitinh.com

Security Classification	Compal Secret Data		
Issued Date	2008/02/25	Deciphered Date	2008/02/25

THIS SHEET OF ENGINEERING DRAWING IS THE PROPRIETARY PROPERTY OF COMPAL ELECTRONICS, INC. AND CONTAINS CONFIDENTIAL AND TRADE SECRET INFORMATION. THIS SHEET MAY NOT BE TRANSFERRED FROM THE CUSTODY OF THE COMPETENT DEPARTMENT EXCEPT AS AUTHORIZED BY COMPAL ELECTRONICS, INC. NEITHER THIS SHEET NOR THE INFORMATION IT CONTAINS MAY BE USED BY OR DISCLOSED TO ANY THIRD PARTY WITHOUT PRIOR WRITTEN CONSENT OF COMPAL ELECTRONICS, INC.

Title	Compal Electronics, Inc.		
	PEG & LVDS & DAC		
Size	Document Number		Rev
Custom	LA-4102P Blade discrete		0.4
Date: Monday, February 25, 2008	Sheet 20 of 54		

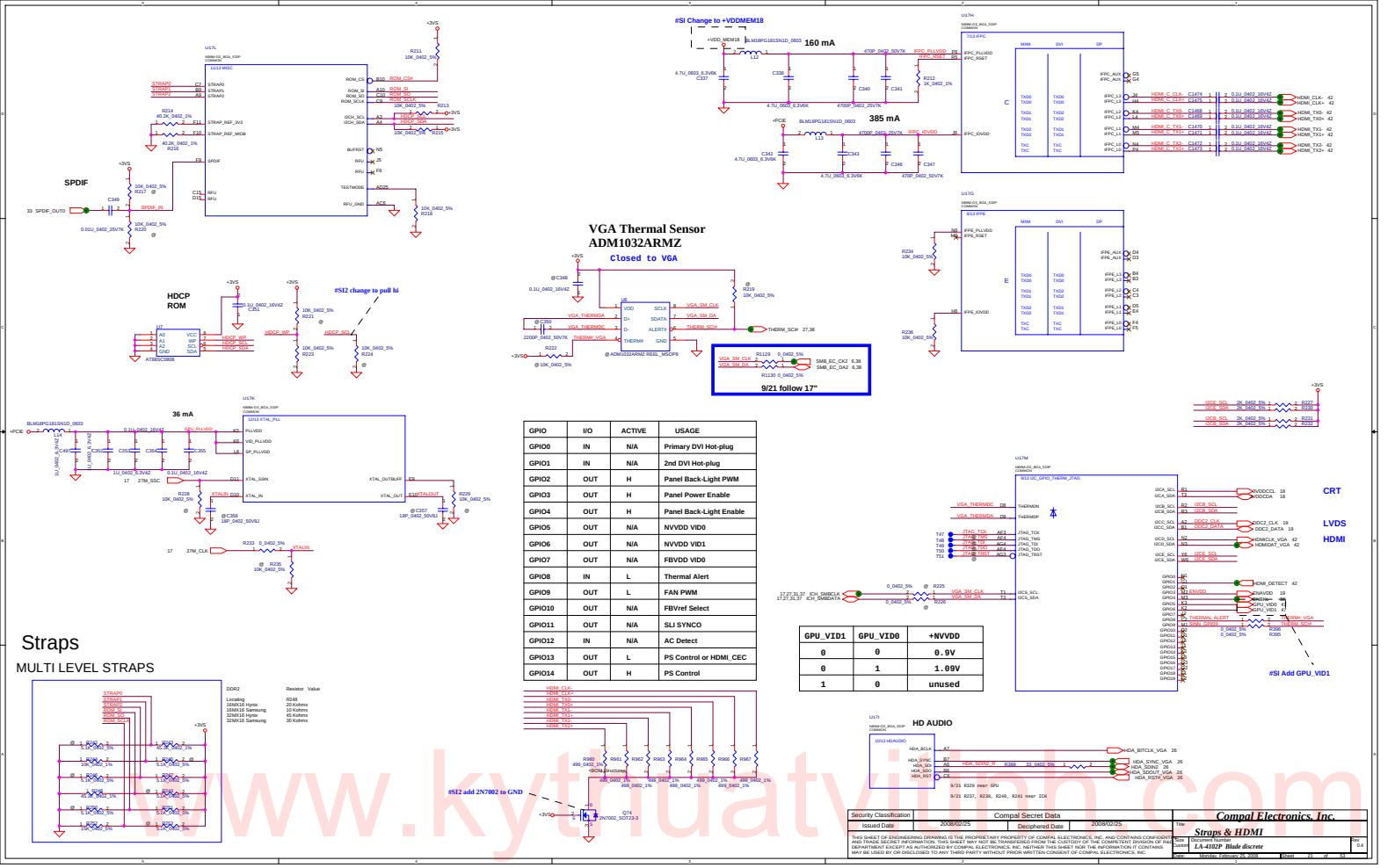

GPIO	I/O	ACTIVE	USAGE
GPIO0	IN	N/A	Primary DVI Hot-plug
GPIO1	IN	N/A	2nd DVI Hot-plug
GPIO2	OUT	H	Panel Back-Light PWM
GPIO3	OUT	H	Panel Power Enable
GPIO4	OUT	H	Panel Back-Light Enable
GPIO5	OUT	N/A	NVVDD VID0
GPIO6	OUT	N/A	NVVDD VID1
GPIO7	OUT	N/A	FBVDD VID0
GPIO8	IN	L	Thermal Alert
GPIO9	OUT	L	FAN PWM
GPIO10	OUT	N/A	FBVref Select
GPIO11	OUT	N/A	SLI SYNCO
GPIO12	IN	N/A	AC Detect
GPIO13	OUT	L	PS Control or HDMI_CEC
GPIO14	OUT	H	PS Control

GPU_VID1	GPU_VID0	+NVVDD
0	0	0.9V
0	1	1.09V
1	0	unused

Straps

MULTI LEVEL STRAPS

DDR2	Resistor	Value
Locating	R248	
16MX16 Hynix	20 Kohms	
16MX16 Samsung	10 Kohms	
32MX16 Hynix	45 Kohms	
32MX16 Samsung	30 Kohms	

www.kytnuatvinh.com

Security Classification	Compal Secret Data		
Issued Date	2008/02/25	Deciphered Date	2008/02/25

Compal Electronics, Inc.

Title: Straps & HDMI

Size: Document Number: LA-4102P Rev: 0.4

Date: Monday, February 25, 2008 Sheet 21 of 38

VRAM Interface

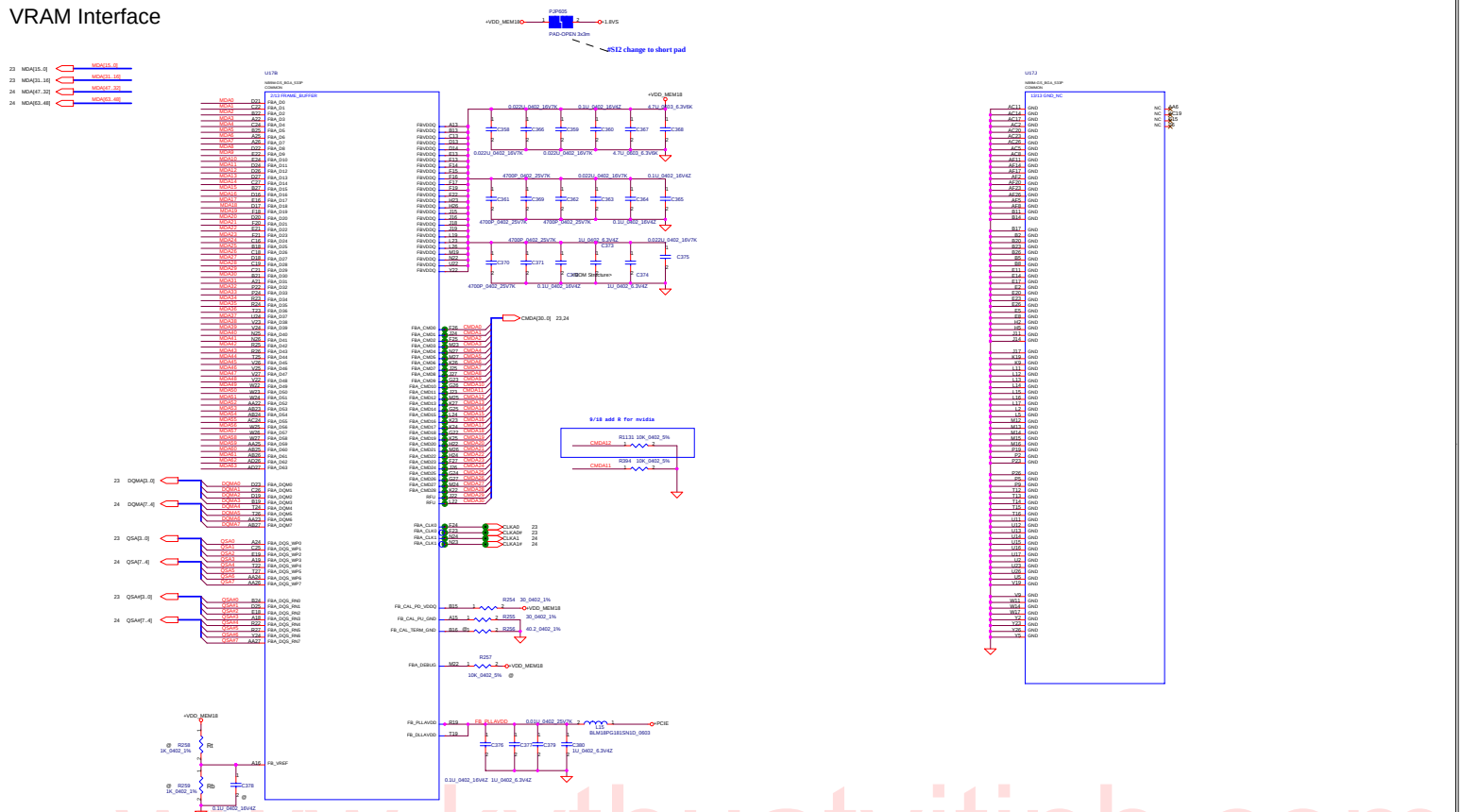

www.kythuatvitinh.com

Security Classification:	Compal Secret Data		
Issued Date	2008/02/25	Deciphered Date	2008/02/25

THIS SHEET OF ENGINEERING DRAWING IS THE PROPRIETARY PROPERTY OF COMPAL ELECTRONICS, INC. AND CONTAINS CONFIDENTIAL AND TRADE SECRET INFORMATION. THIS SHEET MAY NOT BE TRANSFERED FROM THE CUSTODY OF THE COMPETENT DIVISION OF R&D DEPARTMENT EXCEPT AS AUTHORIZED BY COMPAL ELECTRONICS, INC. NEITHER THIS SHEET NOR THE INFORMATION IT CONTAINS MAY BE USED BY OR DISCLOSED TO ANY THIRD PARTY WITHOUT PRIOR WRITTEN CONSENT OF COMPAL ELECTRONICS, INC.

Compal Electronics, Inc.

Title: VRAM / GND

Size: Document Number: LA-4102P Blade discrete Rev: 0.4

Date: Monday, February 25, 2008 Sheet 22 of 53

VRAM DDR2 chips (256MB & 512MB)

32Mx16 DDR2 400MHz *4==>256MB

64Mx16 DDR2 400MHz*4==>512MB

	DATA Bus	
Address	0..31	32..63
CMD0	A3	
CMD1	A0	A0
CMD2	A2	
CMD3	A1	A1
CMD4		A3
CMD5		A4
CMD6		A5
CMD7		
CMD8	CS#	CS#
CMD9	WE#	WE#
CMD10	BA0	BA0
CMD11	CKE	CKE
CMD12	ODT	ODT
CMD13		
CMD14	A12	A12
CMD15	RAS#	RAS#
CMD16	A11	A11
CMD17	A10	A10
CMD18	BA1	BA1
CMD19	A8	A8
CMD20	A9	A9
CMD21	A6	A6
CMD22	A5	
CMD23	A7	A7
CMD24	A4	
CMD25	CAS#	CAS#
CMD26	A13	A13
CMD27	BA2	BA2
CMD28		
CMD29		
CMD30		

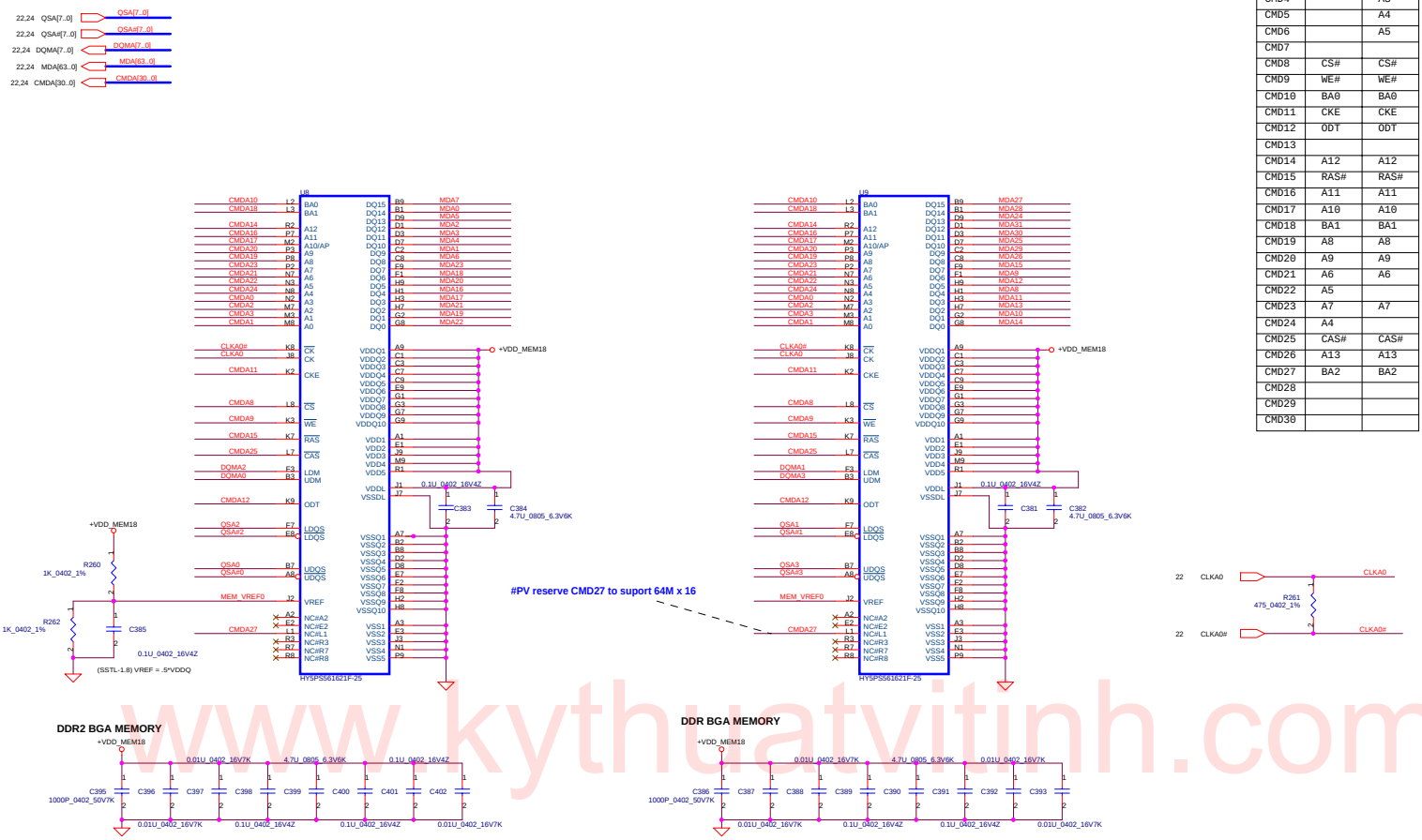

www.kythuatvitinh.com

DDR2 BGA MEMORY

DDR BGA MEMORY

Security Classification	Compal Secret Data		
Issued Date	2008/02/25	Deciphered Date	2008/02/25

THIS SHEET OF ENGINEERING DRAWING IS THE PROPRIETARY PROPERTY OF COMPAL ELECTRONICS, INC. AND CONTAINS CONFIDENTIAL AND TRADE SECRET INFORMATION. THIS SHEET MAY NOT BE TRANSFERED FROM THE CUSTODY OF THE COMPETENT DIVISION OF R&D DEPARTMENT EXCEPT AS AUTHORIZED BY COMPAL ELECTRONICS, INC. NEITHER THIS SHEET NOR THE INFORMATION IT CONTAINS MAY BE USED BY OR DISCLOSED TO ANY THIRD PARTY WITHOUT PRIOR WRITTEN CONSENT OF COMPAL ELECTRONICS, INC.

Compal Electronics, Inc.

Title: **LS-2821 ATI_M56-P VGA Board**

Size | Document Number: **CHANNEL A EXT. 256M_1** | Rev: 0.1

Date: Monday, February 25, 2008 | Sheet 7 of 16

VRAM DDR2 chips (256MB & 512MB)

32Mx16 DDR2 400MHz *4==>256MB

64Mx16 DDR2 400MHz*4==>512MB

	DATA Bus	
Address	0..31	32..63
CMD0	A3	
CMD1	A0	A0
CMD2	A2	
CMD3	A1	A1
CMD4		A3
CMD5		A4
CMD6		A5
CMD7		
CMD8	CS#	CS#
CMD9	WE#	WE#
CMD10	BA0	BA0
CMD11	CKE	CKE
CMD12	ODT	ODT
CMD13		
CMD14	A12	A12
CMD15	RAS#	RAS#
CMD16	A11	A11
CMD17	A10	A10
CMD18	BA1	BA1
CMD19	A8	A8
CMD20	A9	A9
CMD21	A6	A6
CMD22	A5	
CMD23	A7	A7
CMD24	A4	
CMD25	CAS#	CAS#
CMD26	A13	A13
CMD27	BA2	BA2
CMD28		
CMD29		
CMD30		

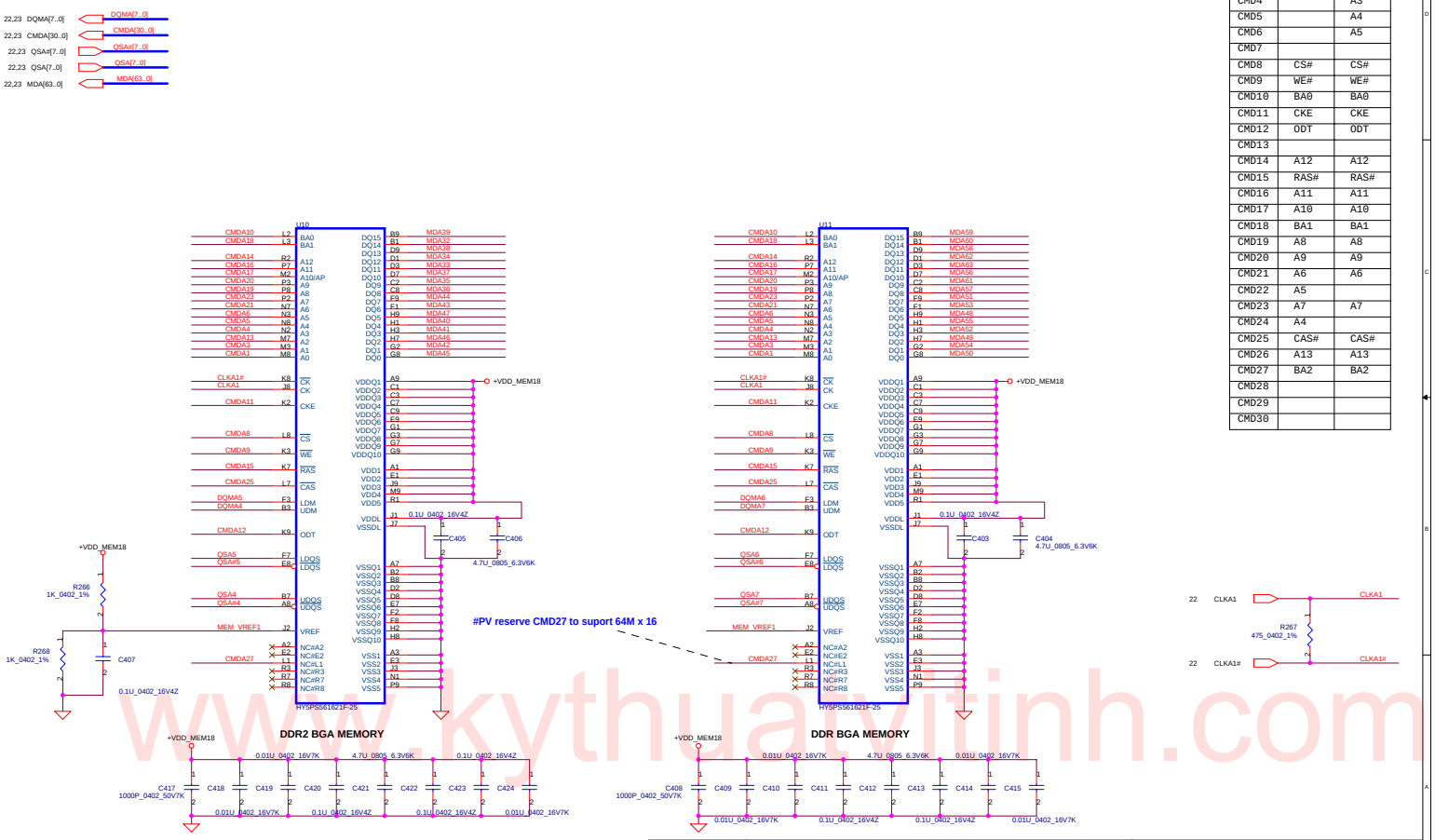

www.kythuatvitinh.com

Security Classification	Compal Secret Data		
Issued Date	2008/02/25	Deciphered Date	2008/02/25

THIS SHEET OF ENGINEERING DRAWING IS THE PROPRIETARY PROPERTY OF COMPAL ELECTRONICS, INC. AND CONTAINS CONFIDENTIAL AND TRADE SECRET INFORMATION. THIS SHEET MAY NOT BE TRANSFERED FROM THE CUSTODY OF THE COMPETENT DIVISION OF R&D DEPARTMENT EXCEPT AS AUTHORIZED BY COMPAL ELECTRONICS, INC. NEITHER THIS SHEET NOR THE INFORMATION IT CONTAINS MAY BE USED BY OR DISCLOSED TO ANY THIRD PARTY WITHOUT PRIOR WRITTEN CONSENT OF COMPAL ELECTRONICS, INC.

Compal Electronics, Inc.

Title: **LS-2821 ATI_M56-P VGA Board**

Size: | Document Number: **CHANNEL A EXT. 256M_2** | Rev: 0.1

Date: Monday, February 25, 2008 | Sheet 8 of 16

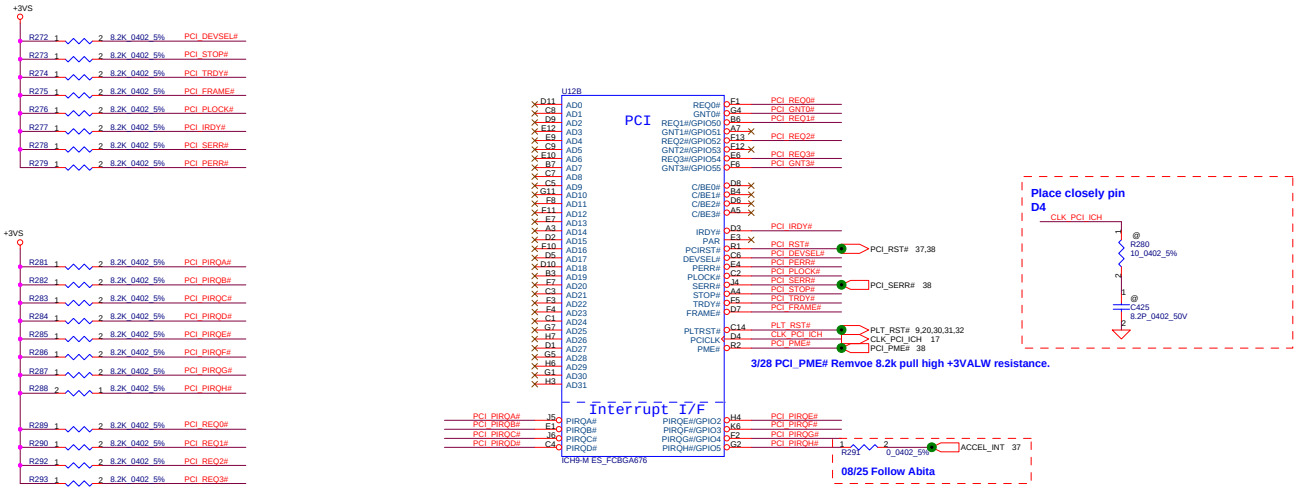

A16 swap override Strap	
PCI_GNT3#	Low= A16 swap override Enble High= Default *

Boot BIOS Strap		
PCI_GNT0#	SPI_CS#1	Boot BIOS Location
0	1	SPI
1	0	PCI
1	1	LPC *

www.kythuatvitinh.com

Security Classification	Compal Secret Data		
Issued Date	2008/02/25	Deciphered Date	2008/02/25

THIS SHEET OF ENGINEERING DRAWING IS THE PROPRIETARY PROPERTY OF COMPAL ELECTRONICS, INC. AND CONTAINS CONFIDENTIAL AND TRADE SECRET INFORMATION. THIS SHEET MAY NOT BE TRANSFERED FROM THE CUSTODY OF THE COMPETENT DIVISION OF R&D DEPARTMENT EXCEPT AS AUTHORIZED BY COMPAL ELECTRONICS, INC. NEITHER THIS SHEET NOR THE INFORMATION IT CONTAINS MAY BE USED BY OR DISCLOSED TO ANY THIRD PARTY WITHOUT PRIOR WRITTEN CONSENT OF COMPAL ELECTRONICS, INC.

Compal Electronics, Inc.

Title: ICH9(1/4)-PCI/INT

Size | Document Number: LA-4102P Blade discrete | Rev 0.4

Date: Monday, February 25, 2008 | Sheet 25 of 53

DELL CONF

THIS SHEET OF ENGINEERING DRAWING IS THE PROPRIETARY PROPERTY OF COMPAL ELECTRONICS, INC. AND CONTAINS CONFIDENTIAL AND TRADE SECRET INFORMATION. THIS SHEET MAY NOT BE TRANSFERED FROM THE CUSTODY OF THE COMPETENT DIVISION OF R&D DEPARTMENT EXCEPT AS AUTHORIZED BY COMPAL ELECTRONICS, INC. NEITHER THIS SHEET NOR THE INFORMATION IT CONTAINS MAY BE USED BY OR DISCLOSED TO ANY THIRD PARTY WITHOUT PRIOR WRITTEN CONSENT OF COMPAL ELECTRONICS, INC.

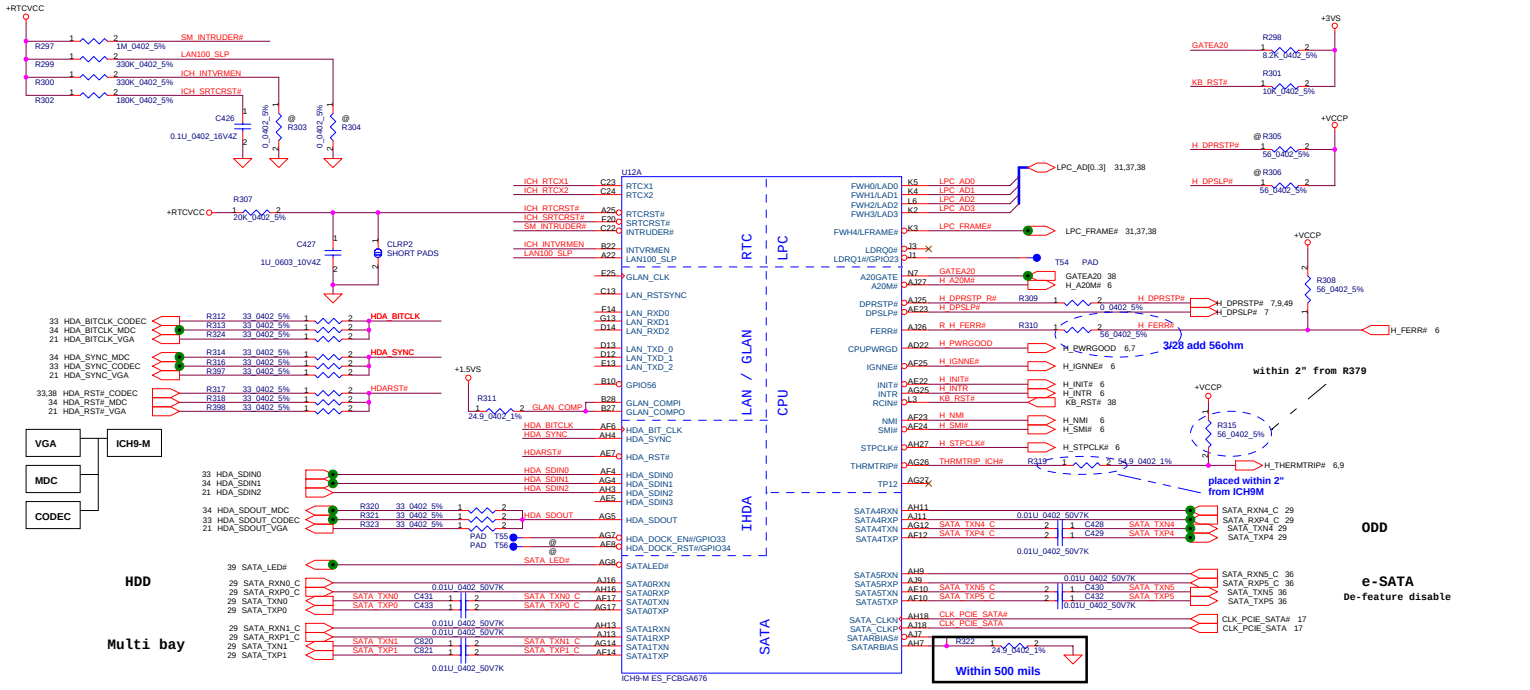

ICH_RSVD	HDA_SDOUT_CODEC	
0	0	
0	1	
1	0	
1	1	

Security Classification	Compal Secret Data		
Issued Date	2008/02/25	Deciphered Date	2008/02/25

THIS SHEET OF ENGINEERING DRAWING IS THE PROPRIETARY PROPERTY OF COMPAL ELECTRONICS, INC. AND CONTAINS CONFIDENTIAL AND TRADE SECRET INFORMATION. THIS SHEET MAY NOT BE TRANSFERED FROM THE CUSTODY OF THE COMPETENT DIVISION OF R&D DEPARTMENT EXCEPT AS AUTHORIZED BY COMPAL ELECTRONICS, INC. NEITHER THIS SHEET NOR THE INFORMATION IT CONTAINS MAY BE USED BY OR DISCLOSED TO ANY THIRD PARTY WITHOUT PRIOR WRITTEN CONSENT OF COMPAL ELECTRONICS, INC.

Compal Electronics, Inc.

Title: ICH9(2/4)_LAN,HD,IDE,LPC

Size: Custom | Document Number: LA-4102P Blade discrete | Rev: 0.4

Date: Monday, February 25, 2008 | Sheet 26 of 53

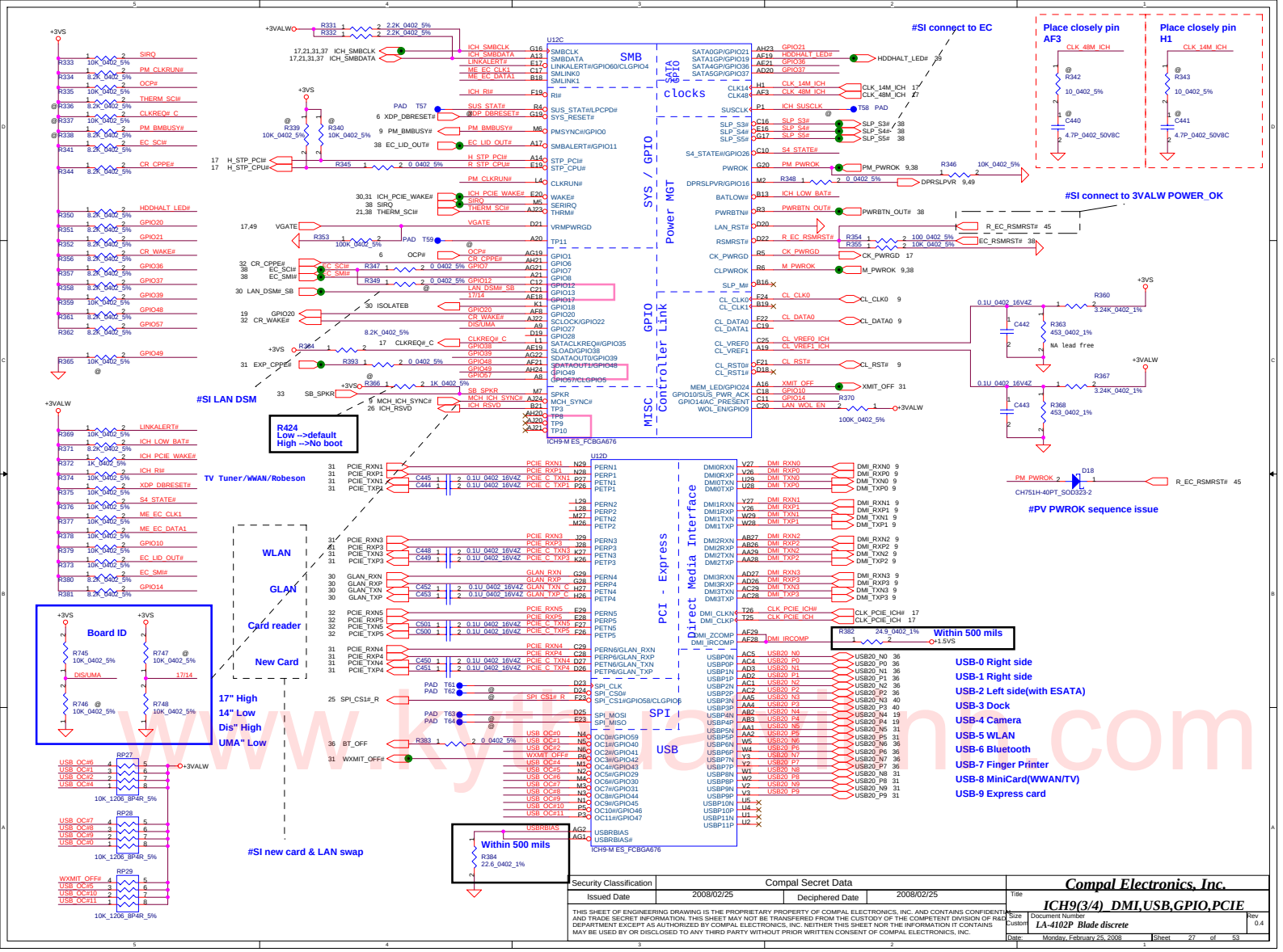

Security Classification	Compal Secret Data		
Issued Date	2008/02/25	Deciphered Date	2008/02/25

THIS SHEET OF ENGINEERING DRAWING IS THE PROPRIETARY PROPERTY OF COMPAL ELECTRONICS, INC. AND CONTAINS CONFIDENTIAL AND TRADE SECRET INFORMATION. THIS SHEET MAY NOT BE TRANSFERRED FROM THE CUSTODY OF THE COMPETENT DIVISION OF R&D DEPARTMENT EXCEPT AS AUTHORIZED BY COMPAL ELECTRONICS, INC. NEITHER THIS SHEET NOR THE INFORMATION IT CONTAINS MAY BE USED BY OR DISCLOSED TO ANY THIRD PARTY WITHOUT PRIOR WRITTEN CONSENT OF COMPAL ELECTRONICS, INC.

Compal Electronics, Inc.

Title: ICH9(3/4)_DMI,USB,GPIO,PCIE

Size: Custom | Document Number: LA-4102P Blade discrete | Rev: 0.4

Date: Monday, February 25, 2008 | Sheet 27 of 53

www.kyhtechelin.com

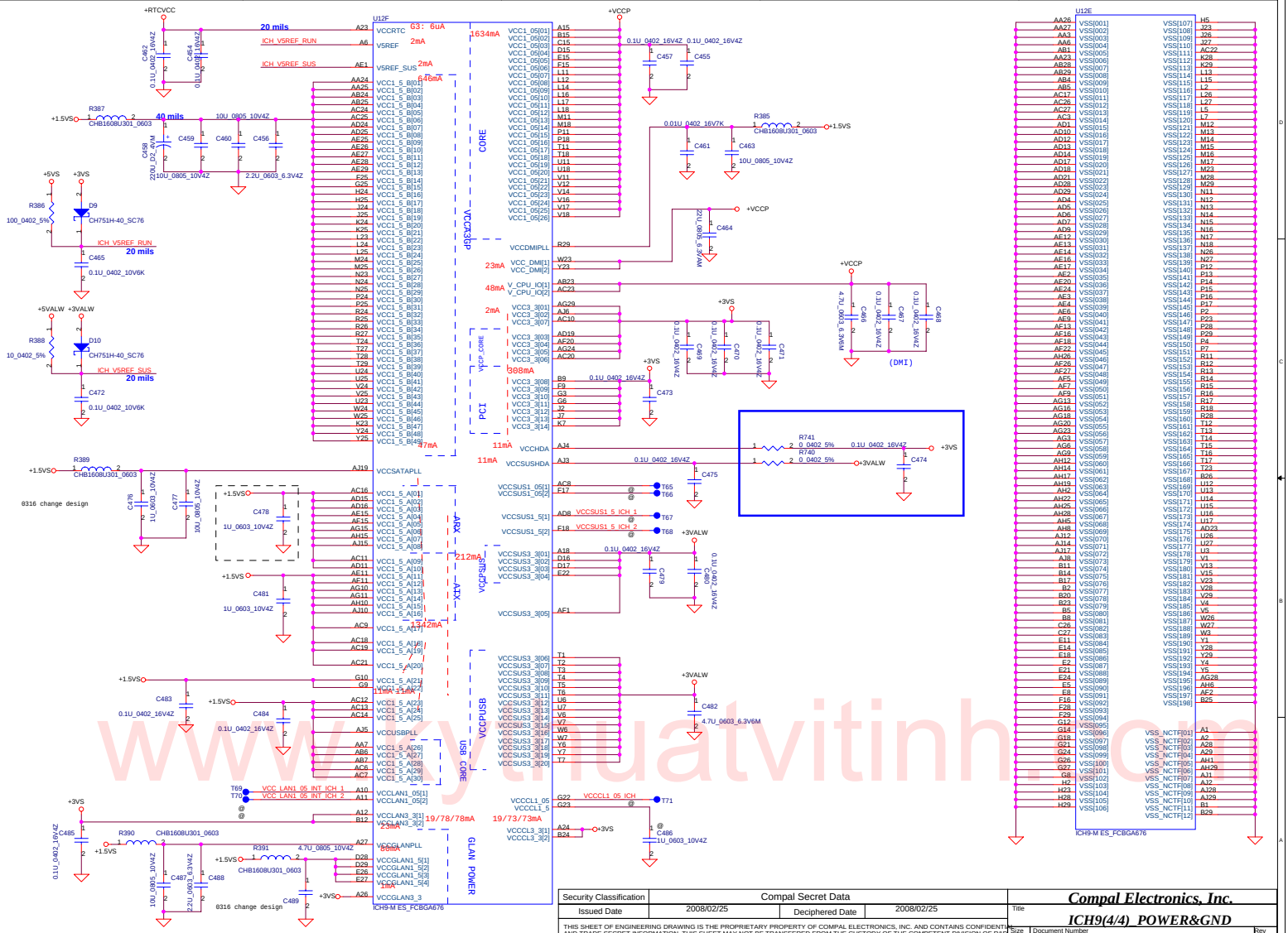

Security Classification	Compal Secret Data		
Issued Date	2008/02/25	Deciphered Date	2008/02/25

THIS SHEET OF ENGINEERING DRAWING IS THE PROPRIETARY PROPERTY OF COMPAL ELECTRONICS, INC. AND CONTAINS CONFIDENTIAL AND TRADE SECRET INFORMATION. THIS SHEET MAY NOT BE TRANSFERED FROM THE CUSTODY OF THE COMPETENT DIVISION OF R&D DEPARTMENT EXCEPT AS AUTHORIZED BY COMPAL ELECTRONICS, INC. NEITHER THIS SHEET NOR THE INFORMATION IT CONTAINS MAY BE USED BY OR DISCLOSED TO ANY THIRD PARTY WITHOUT PRIOR WRITTEN CONSENT OF COMPAL ELECTRONICS, INC.

Compal Electronics, Inc.

Title: **ICH9(4/4) POWER&GND**

Size: Custom | Document Number: LA-4102P Blade discrete | Rev: 0.4

Date: Monday, February 25, 2008 | Sheet 28 of 53

HDD Connector

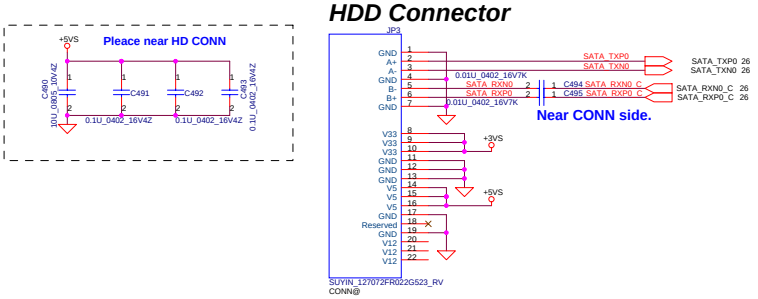

CD-ROM Connector

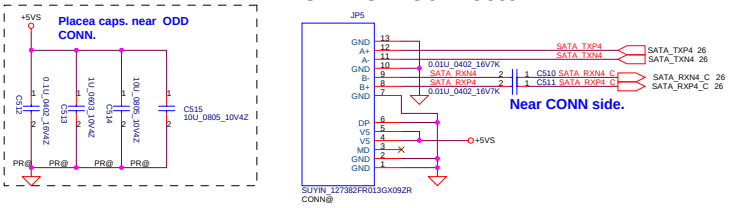

Multi Bay Connector

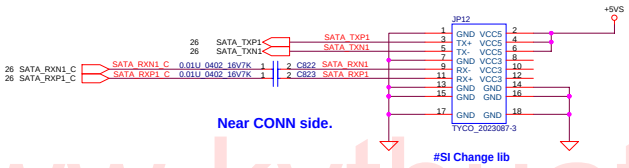

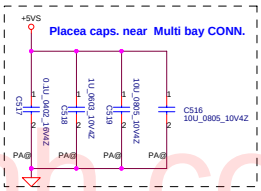

www.kythuatvitinh.com

Security Classification	Compal Secret Data		
Issued Date	2008/02/25	Deciphered Date	2008/02/25

THIS SHEET OF ENGINEERING DRAWING IS THE PROPRIETARY PROPERTY OF COMPAL ELECTRONICS, INC. AND CONTAINS CONFIDENTIAL AND TRADE SECRET INFORMATION. THIS SHEET MAY NOT BE TRANSFERED FROM THE CUSTODY OF THE COMPETENT DIVISION OF R&D DEPARTMENT EXCEPT AS AUTHORIZED BY COMPAL ELECTRONICS, INC. NEITHER THIS SHEET NOR THE INFORMATION IT CONTAINS MAY BE USED BY OR DISCLOSED TO ANY THIRD PARTY WITHOUT PRIOR WRITTEN CONSENT OF COMPAL ELECTRONICS, INC.

Compal Electronics, Inc.

Title: **HDD & CDROM**

Size: Custom | Document Number: LA-4102P Blade discrete | Rev: 0.4

Date: Monday, February 25, 2008 | Sheet 29 of 53

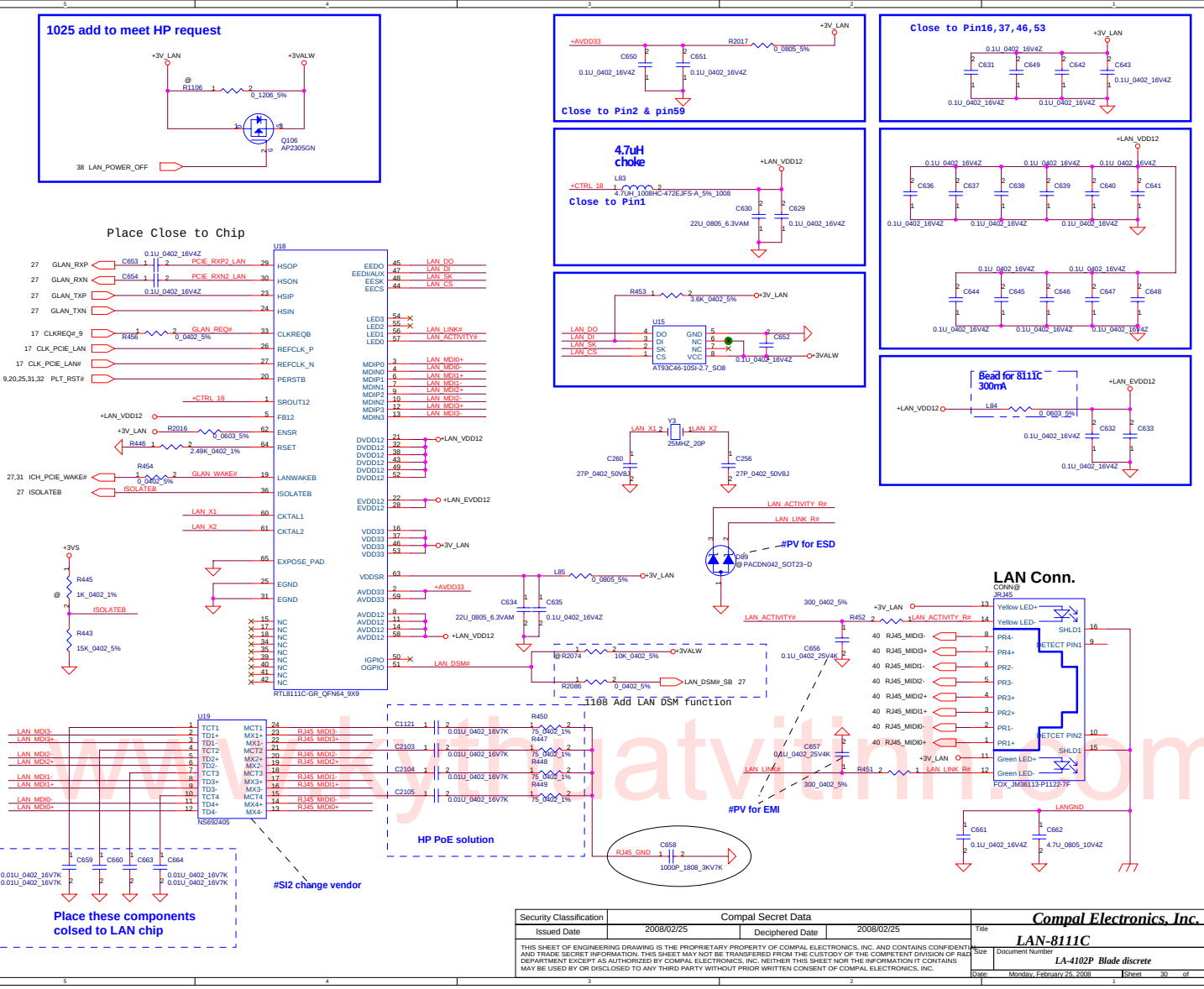

Security Classification	Compal Secret Data		
Issued Date	2008/02/25	Deciphered Date	2008/02/25

THIS SHEET OF ENGINEERING DRAWING IS THE PROPRIETARY PROPERTY OF COMPAL ELECTRONICS, INC. AND CONTAINS CONFIDENTIAL AND TRADE SECRET INFORMATION. THIS SHEET MAY NOT BE TRANSFERED FROM THE CUSTODY OF THE COMPETENT DIVISION OF R&D DEPARTMENT EXCEPT AS AUTHORIZED BY COMPAL ELECTRONICS, INC. NEITHER THIS SHEET NOR THE INFORMATION IT CONTAINS MAY BE USED BY OR DISCLOSED TO ANY THIRD PARTY WITHOUT PRIOR WRITTEN CONSENT OF COMPAL ELECTRONICS, INC.

Compal Electronics, Inc.

Title: **LAN-8111C**

Size: | Document Number: *LA-4102P Blade discrete* | Rev: 0.4

Date: Monday, February 25, 2008 | Sheet 30 of 53

www.kythuatvitinh.com

Mini Card 0--TV tuner/WWAN/Robson

SIM card Connector

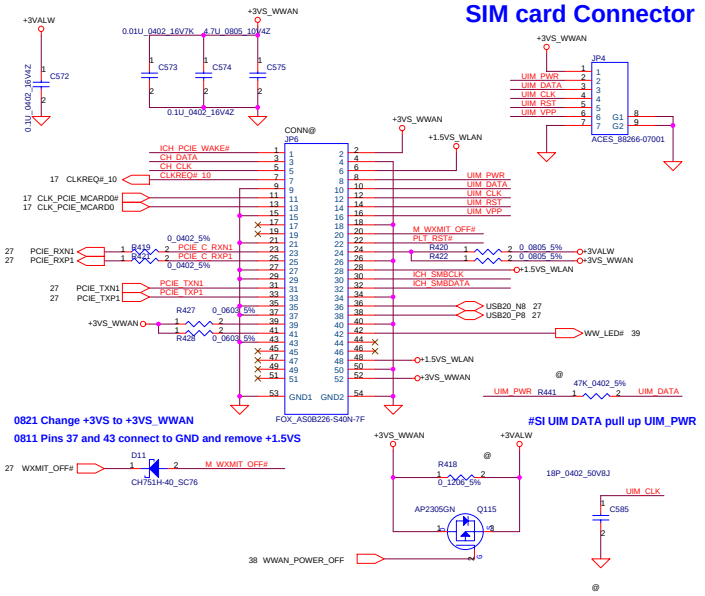

0821 Change +3VS to +3VS_WWAN

0811 Pins 37 and 43 connect to GND and remove +1.5VS

#SI UIM DATA pull up UIM_PWR

Mini Card 2---WLAN

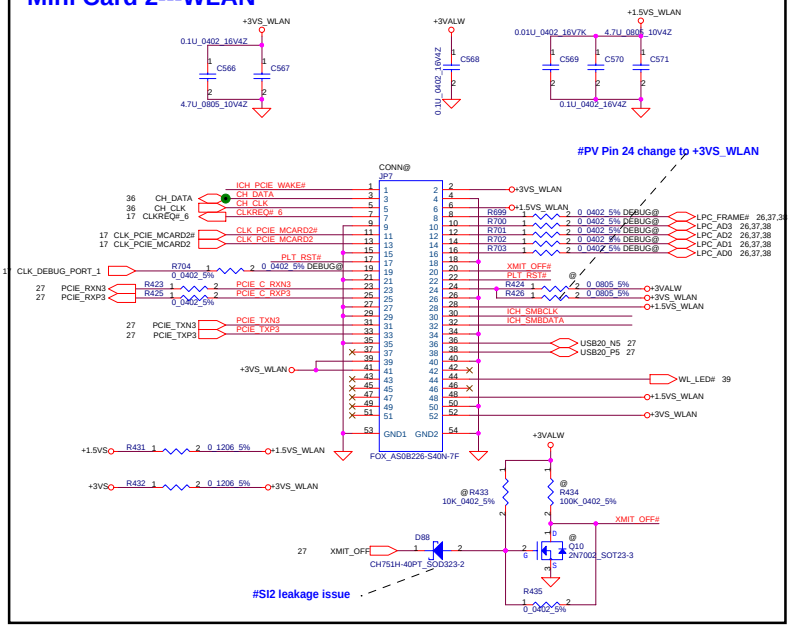

New Card

Express Card Power Switch

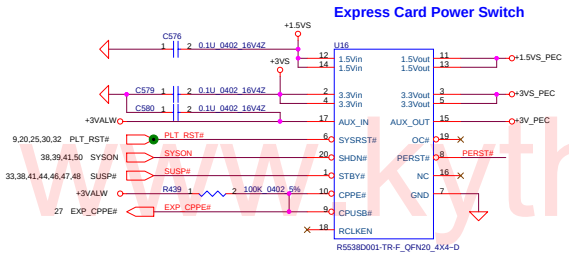

internal pull high to 3.3Vaux-in
EC need setting at Hi-Z & output Low

Close to JEXP

Near to Express Card slot.

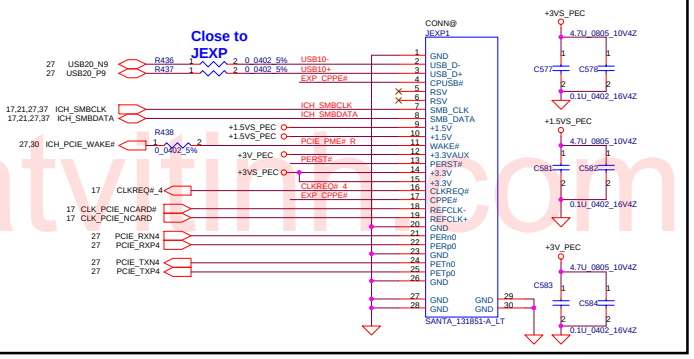

www.kythuatvitinh.com

Security Classification	Compal Secret Data		
Issued Date	2008/02/25	Deciphered Date	2008/02/25

THIS SHEET OF ENGINEERING DRAWING IS THE PROPRIETARY PROPERTY OF COMPAL ELECTRONICS, INC. AND CONTAINS CONFIDENTIAL AND TRADE SECRET INFORMATION. THIS SHEET MAY NOT BE TRANSFERED FROM THE CUSTODY OF THE COMPETENT DIVISION OF R&D DEPARTMENT EXCEPT AS AUTHORIZED BY COMPAL ELECTRONICS, INC. NEITHER THIS SHEET NOR THE INFORMATION IT CONTAINS MAY BE USED BY OR DISCLOSED TO ANY THIRD PARTY WITHOUT PRIOR WRITTEN CONSENT OF COMPAL ELECTRONICS, INC.

Compal Electronics, Inc.

Title: WLAN, WWAN, New Card

Size | Document Number: LA-4102P Blade discrete | Rev: 0.4

Date: Monday, February 25, 2008 | Sheet 31 of 53

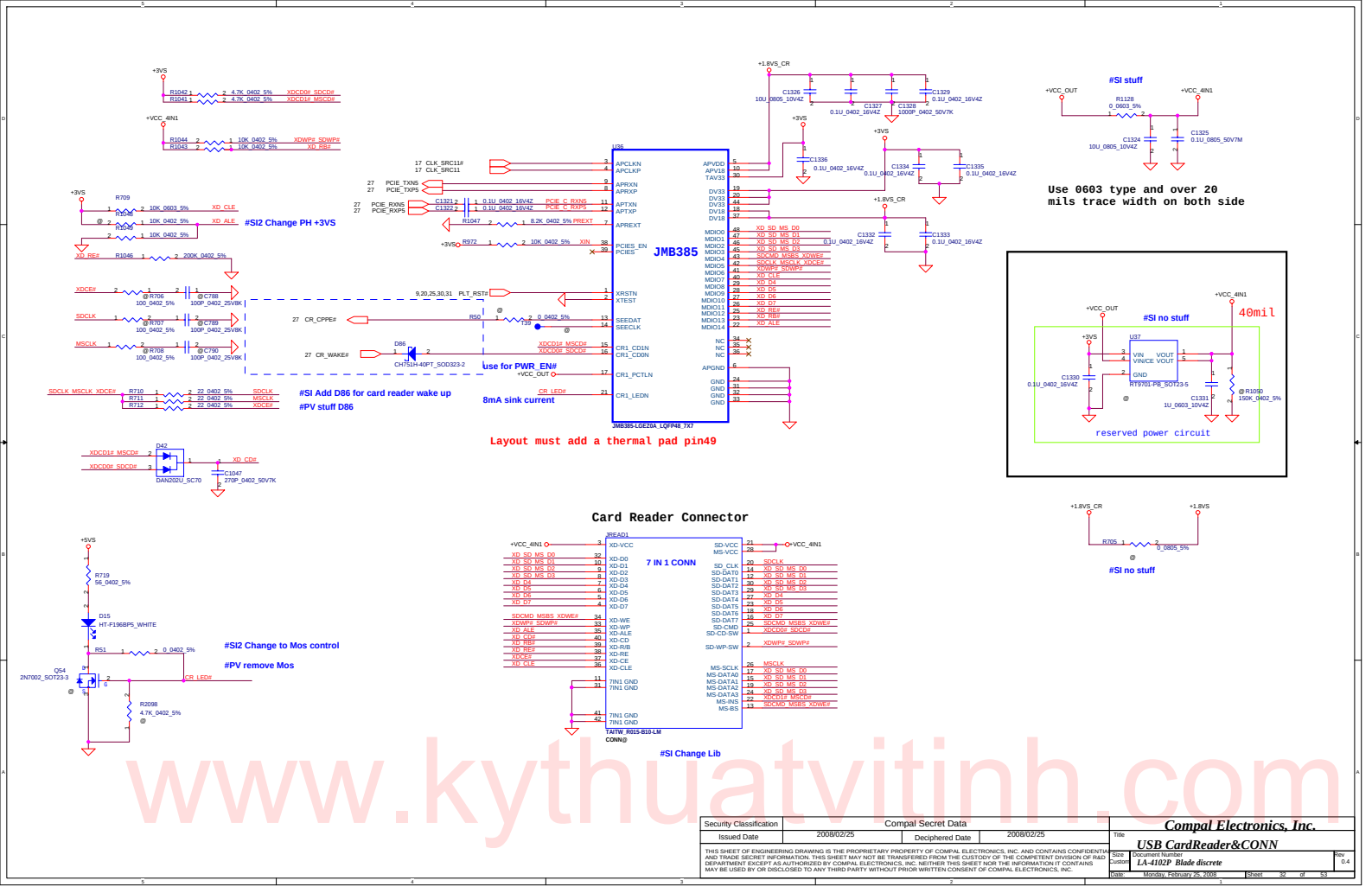

Card Reader Connector

www.kythuatvitinh.com

Security Classification	Compal Secret Data		
Issued Date	2008/02/25	Deciphered Date	2008/02/25

THIS SHEET OF ENGINEERING DRAWING IS THE PROPRIETARY PROPERTY OF COMPAL ELECTRONICS, INC. AND CONTAINS CONFIDENTIAL AND TRADE SECRET INFORMATION. THIS SHEET MAY NOT BE TRANSFERED FROM THE CUSTODY OF THE COMPETENT DIVISION OF R&D DEPARTMENT EXCEPT AS AUTHORIZED BY COMPAL ELECTRONICS, INC. NEITHER THIS SHEET NOR THE INFORMATION IT CONTAINS MAY BE USED BY OR DISCLOSED TO ANY THIRD PARTY WITHOUT PRIOR WRITTEN CONSENT OF COMPAL ELECTRONICS, INC.

Compal Electronics, Inc.

Title: USB CardReader&CONN

Size: Custom | Document Number: LA-4102P Blade discrete | Rev: 0.4

Date: Monday, February 25, 2008 | Sheet 32 of 53

CODEC POWER

(4.75V)
300mA

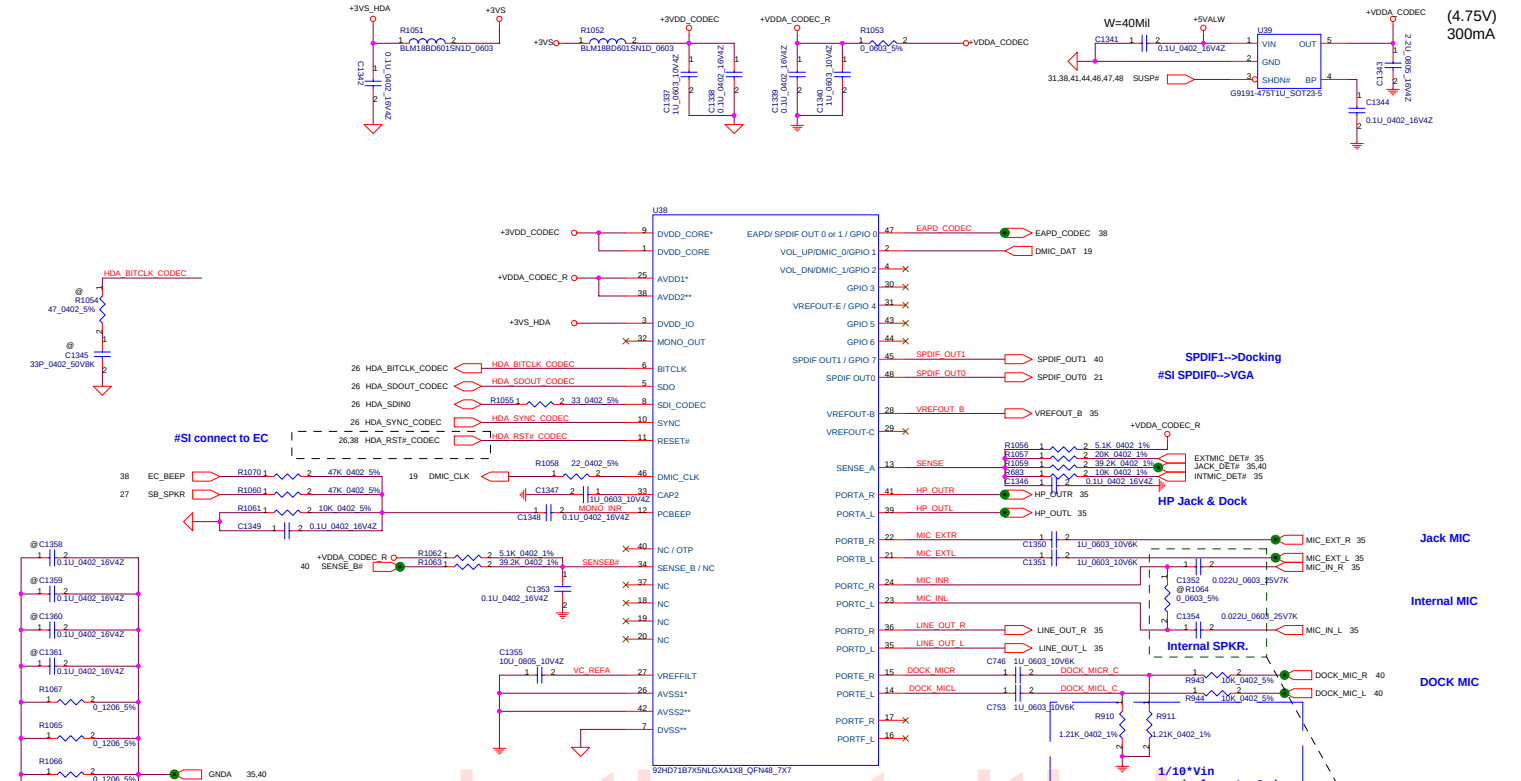

www.kythuatvitinh.com

SENSE A		SENSE B	
Port	Resistor	Port	Resistor
A	39.2K	E	39.2K
B	20K	F	20K
C	10K	G	10K
D	5.11K	H	5.11K

Security Classification	Compal Secret Data		
Issued Date	2008/02/25	Deciphered Date	2008/02/25

THIS SHEET OF ENGINEERING DRAWING IS THE PROPRIETARY PROPERTY OF COMPAL ELECTRONICS, INC. AND CONTAINS CONFIDENTIAL AND TRADE SECRET INFORMATION. THIS SHEET MAY NOT BE TRANSFERED FROM THE CUSTODY OF THE COMPETENT DIVISION OF R&D DEPARTMENT EXCEPT AS AUTHORIZED BY COMPAL ELECTRONICS, INC. NEITHER THIS SHEET NOR THE INFORMATION IT CONTAINS MAY BE USED BY OR DISCLOSED TO ANY THIRD PARTY WITHOUT PRIOR WRITTEN CONSENT OF COMPAL ELECTRONICS, INC.

Title: Codec_IDT9271B7

Size: Custom | Document Number: LA-4102P Blade discrete | Rev: 0.4

Date: Monday, February 25, 2008 | Sheet 33 of 53

MDC 1.5 Conn.

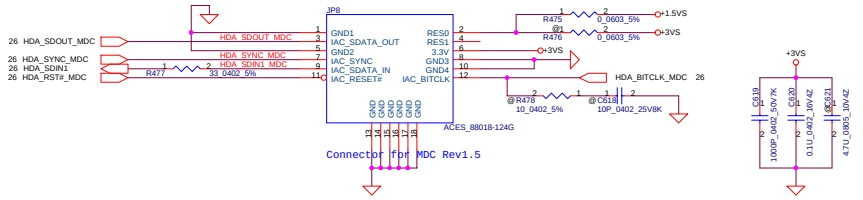

Connector for MDC Rev1.5

www.kythuatvitinh.com

Security Classification	Compal Secret Data			Compal Electronics, Inc.
Issued Date	2008/02/25	Deciphered Date	2008/02/25	Title: MDC 1.5 & Robson

THIS SHEET OF ENGINEERING DRAWING IS THE PROPRIETARY PROPERTY OF COMPAL ELECTRONICS, INC. AND CONTAINS CONFIDENTIAL AND TRADE SECRET INFORMATION. THIS SHEET MAY NOT BE TRANSFERED FROM THE CUSTODY OF THE COMPETENT DIVISION OF R&D DEPARTMENT EXCEPT AS AUTHORIZED BY COMPAL ELECTRONICS, INC. NEITHER THIS SHEET NOR THE INFORMATION IT CONTAINS MAY BE USED BY OR DISCLOSED TO ANY THIRD PARTY WITHOUT PRIOR WRITTEN CONSENT OF COMPAL ELECTRONICS, INC.

Size	Document Number	Rev
	LA-4102P Blade discrete	0.4

Date: Monday, February 25, 2008 Sheet 34 of 53

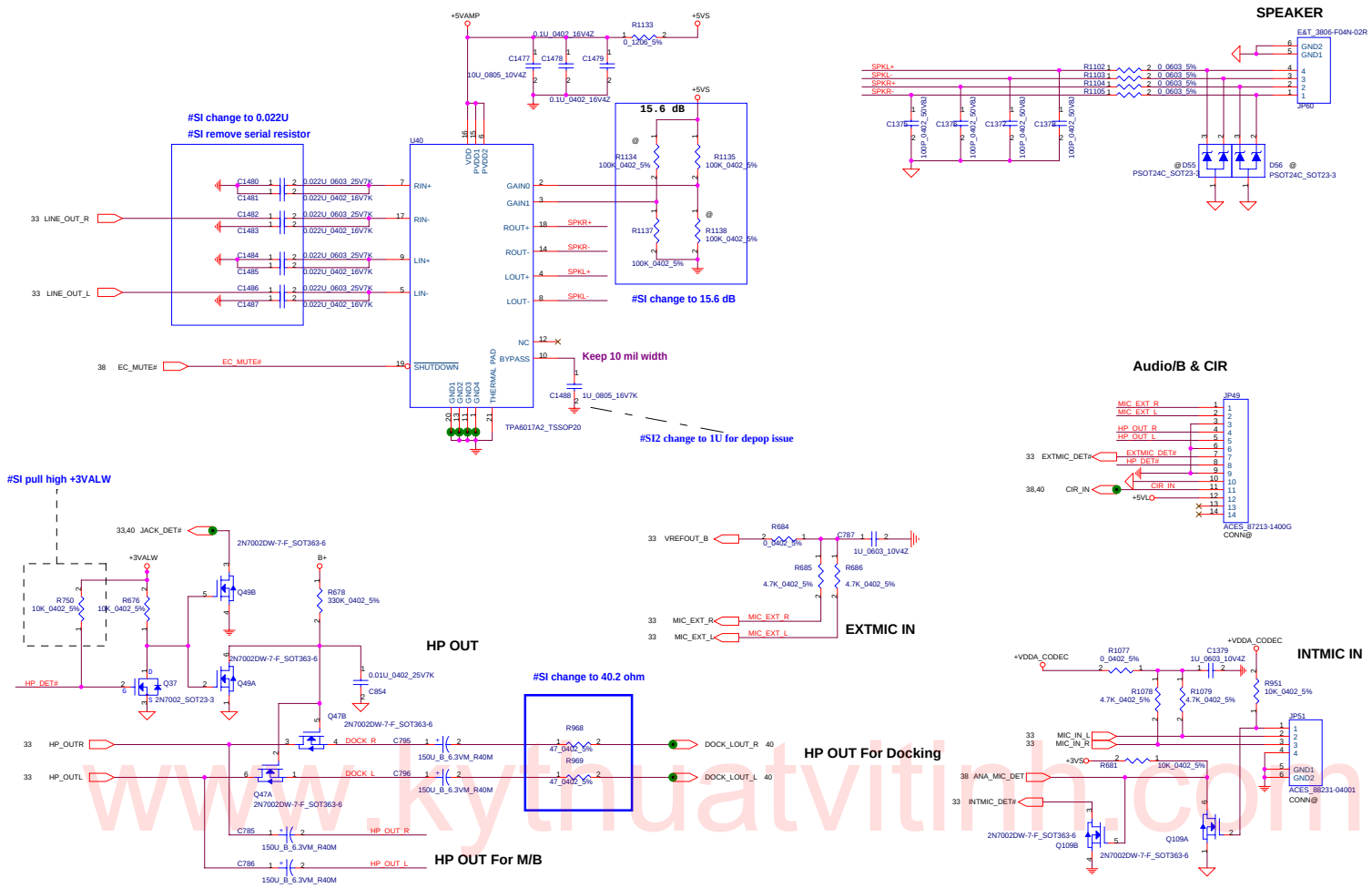

Security Classification	Compal Secret Data		
Issued Date	2008/02/25	Deciphered Date	2008/02/25

THIS SHEET OF ENGINEERING DRAWING IS THE PROPRIETARY PROPERTY OF COMPAL ELECTRONICS, INC. AND CONTAINS CONFIDENTIAL AND TRADE SECRET INFORMATION. THIS SHEET MAY NOT BE TRANSFERED FROM THE CUSTODY OF THE COMPETENT DIVISION OF R&D DEPARTMENT EXCEPT AS AUTHORIZED BY COMPAL ELECTRONICS, INC. NEITHER THIS SHEET NOR THE INFORMATION IT CONTAINS MAY BE USED BY OR DISCLOSED TO ANY THIRD PARTY WITHOUT PRIOR WRITTEN CONSENT OF COMPAL ELECTRONICS, INC.

Title: **AMP & Audio Jack**

Size: Custom | Document Number: **LA-4102P Blade discrete** | Rev: 0.4

Date: Monday, February 25, 2008 | Sheet 35 of 53

www.kythuatvitinh.com

Left side ESATA/USB combination Connector

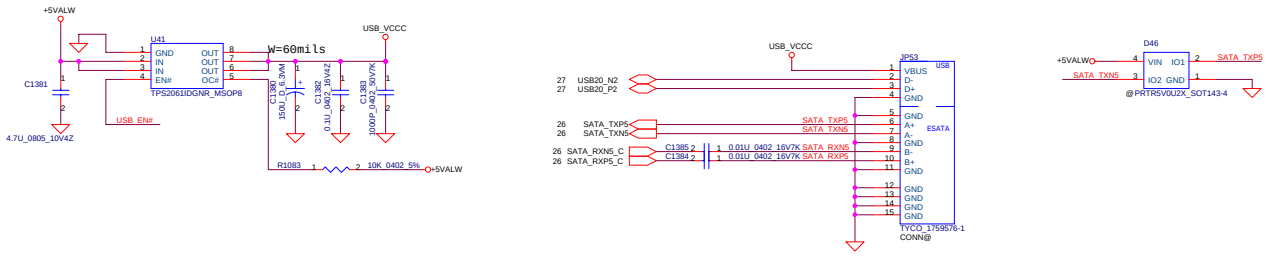

USB cable connector for Right side

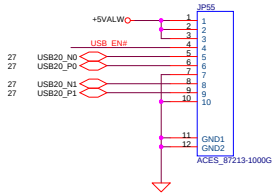

BT Connector

Need change to New version

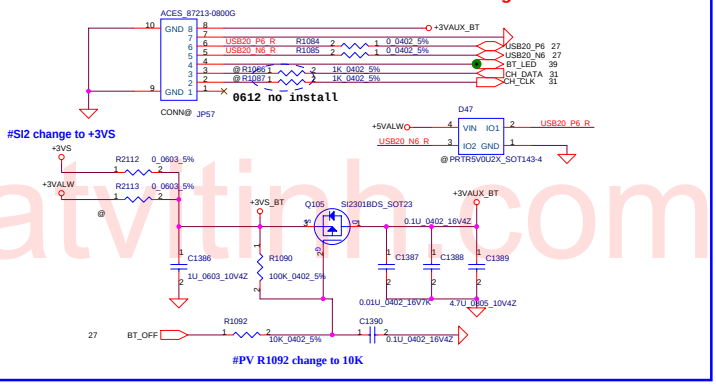

Finger printer

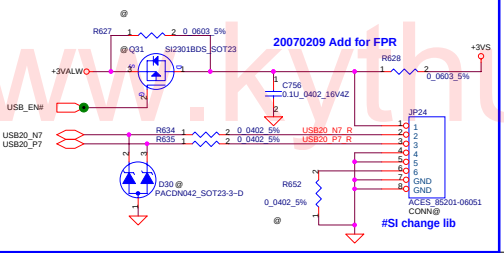

www.kythuatvitinh.com

Security Classification	Compal Secret Data		
Issued Date	2008/02/25	Deciphered Date	2008/02/25

THIS SHEET OF ENGINEERING DRAWING IS THE PROPRIETARY PROPERTY OF COMPAL ELECTRONICS, INC. AND CONTAINS CONFIDENTIAL AND TRADE SECRET INFORMATION. THIS SHEET MAY NOT BE TRANSFERED FROM THE CUSTODY OF THE COMPETENT DIVISION OF R&D DEPARTMENT EXCEPT AS AUTHORIZED BY COMPAL ELECTRONICS, INC. NEITHER THIS SHEET NOR THE INFORMATION IT CONTAINS MAY BE USED BY OR DISCLOSED TO ANY THIRD PARTY WITHOUT PRIOR WRITTEN CONSENT OF COMPAL ELECTRONICS, INC.

Compal Electronics, Inc.

Title: **USB, BT, eSATA**

Size | Document Number: **LA-4102P Blade discrete** | Rev: 0.4

Date: Monday, February 25, 2008 | Sheet 36 of 53

#SI change to +3VALW

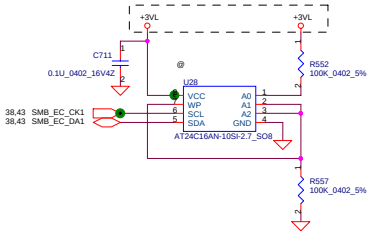

SPI ROM

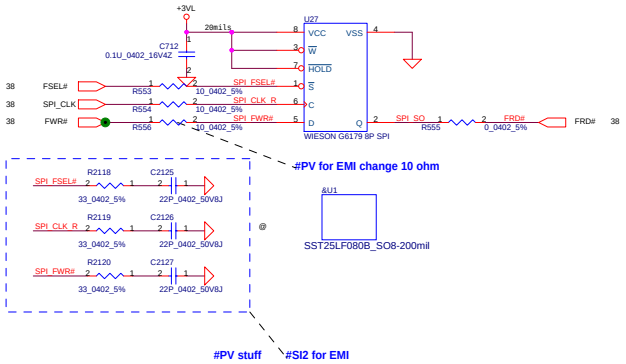

#PV for EMI change 10 ohm

#PV stuff

#SI2 for EMI

LPC Debug Port

Change from +3VL to +3VS. 6/9
Removed +3VS. 6/13

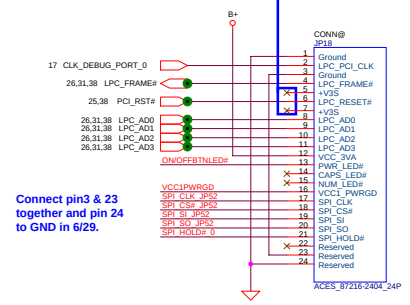

Connect pin3 & 23 together and pin 24 to GND in 6/29.

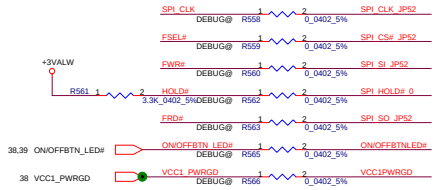

Acceleromter-1

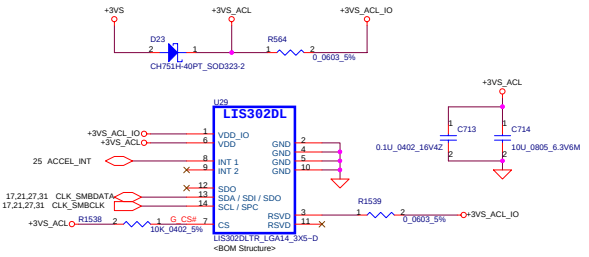

Must be placed in the center of the system.

Acceleromter-2

U29 & U14 must be close

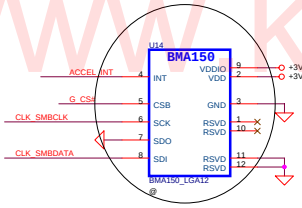

#SI co-lay MMA150

www.kythuatvitinh.com

Security Classification	Compal Secret Data			Compal Electronics, Inc.
Issued Date	2008/02/25	Deciphered Date	2008/02/25	Title: BIOS ROM

THIS SHEET OF ENGINEERING DRAWING IS THE PROPRIETARY PROPERTY OF COMPAL ELECTRONICS, INC. AND CONTAINS CONFIDENTIAL AND TRADE SECRET INFORMATION. THIS SHEET MAY NOT BE TRANSFERED FROM THE CUSTODY OF THE COMPETENT DIVISION OF R&D DEPARTMENT EXCEPT AS AUTHORIZED BY COMPAL ELECTRONICS, INC. NEITHER THIS SHEET NOR THE INFORMATION IT CONTAINS MAY BE USED BY OR DISCLOSED TO ANY THIRD PARTY WITHOUT PRIOR WRITTEN CONSENT OF COMPAL ELECTRONICS, INC.

Size	Document Number	Rev
	LA-4102P Blade discrete	0.4

Date: Monday, February 25, 2008 Sheet 37 of 53

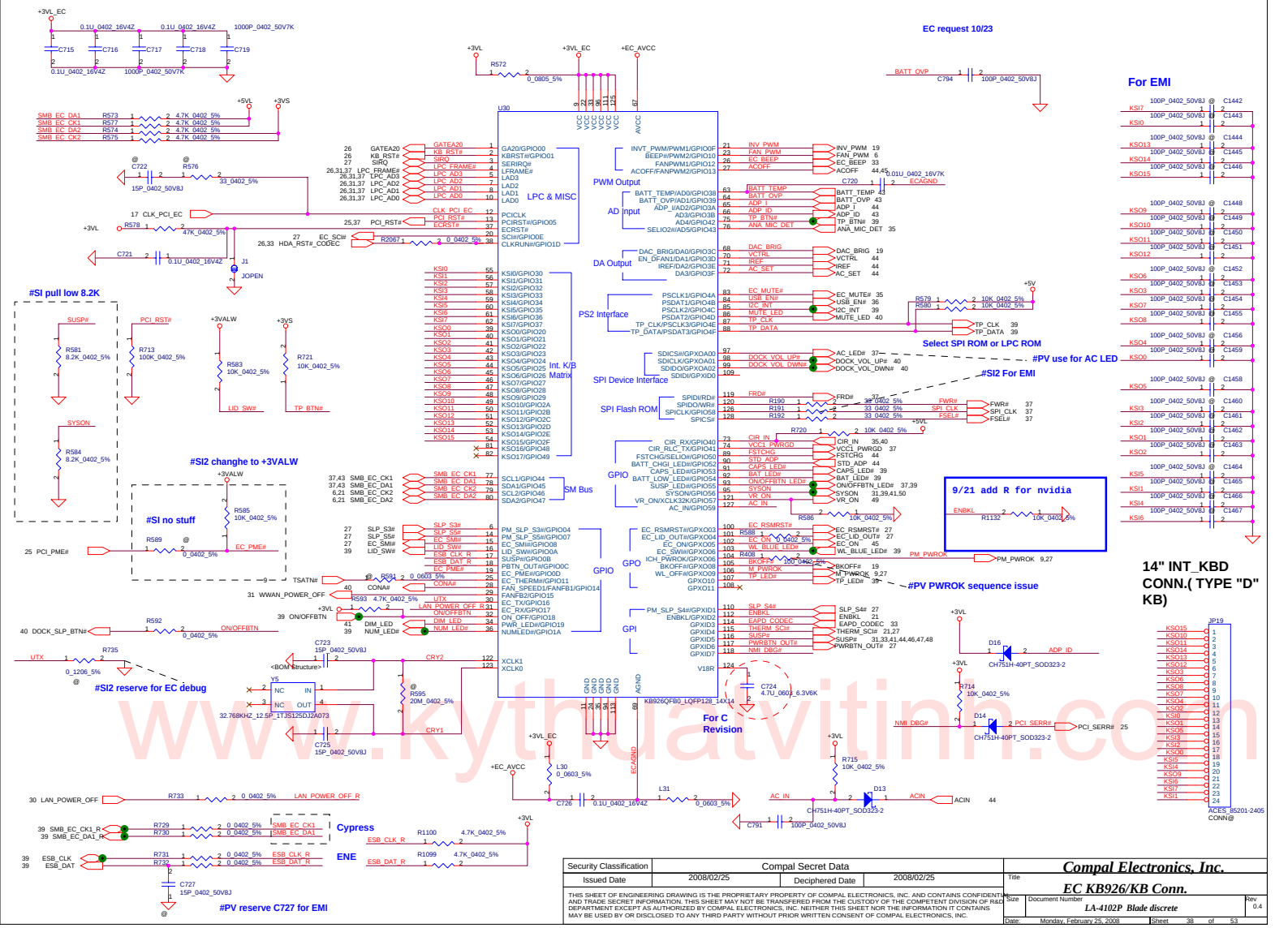

www.kythuatvitinh.com

Security Classification	Compal Secret Data		
Issued Date	2008/02/25	Deciphered Date	2008/02/25

THIS SHEET OF ENGINEERING DRAWING IS THE PROPRIETARY PROPERTY OF COMPAL ELECTRONICS, INC. AND CONTAINS CONFIDENTIAL AND TRADE SECRET INFORMATION. THIS SHEET MAY NOT BE TRANSFERED FROM THE CUSTODY OF THE COMPETENT DIVISION OF R&D DEPARTMENT EXCEPT AS AUTHORIZED BY COMPAL ELECTRONICS, INC. NEITHER THIS SHEET NOR THE INFORMATION IT CONTAINS MAY BE USED BY OR DISCLOSED TO ANY THIRD PARTY WITHOUT PRIOR WRITTEN CONSENT OF COMPAL ELECTRONICS, INC.

Compal Electronics, Inc.

Title: **EC KB926/KB Conn.**

Size: | Document Number: *LA-4102P Blade discrete* | Rev: 0.4

Date: Monday, February 25, 2008 | Sheet 38 of 53

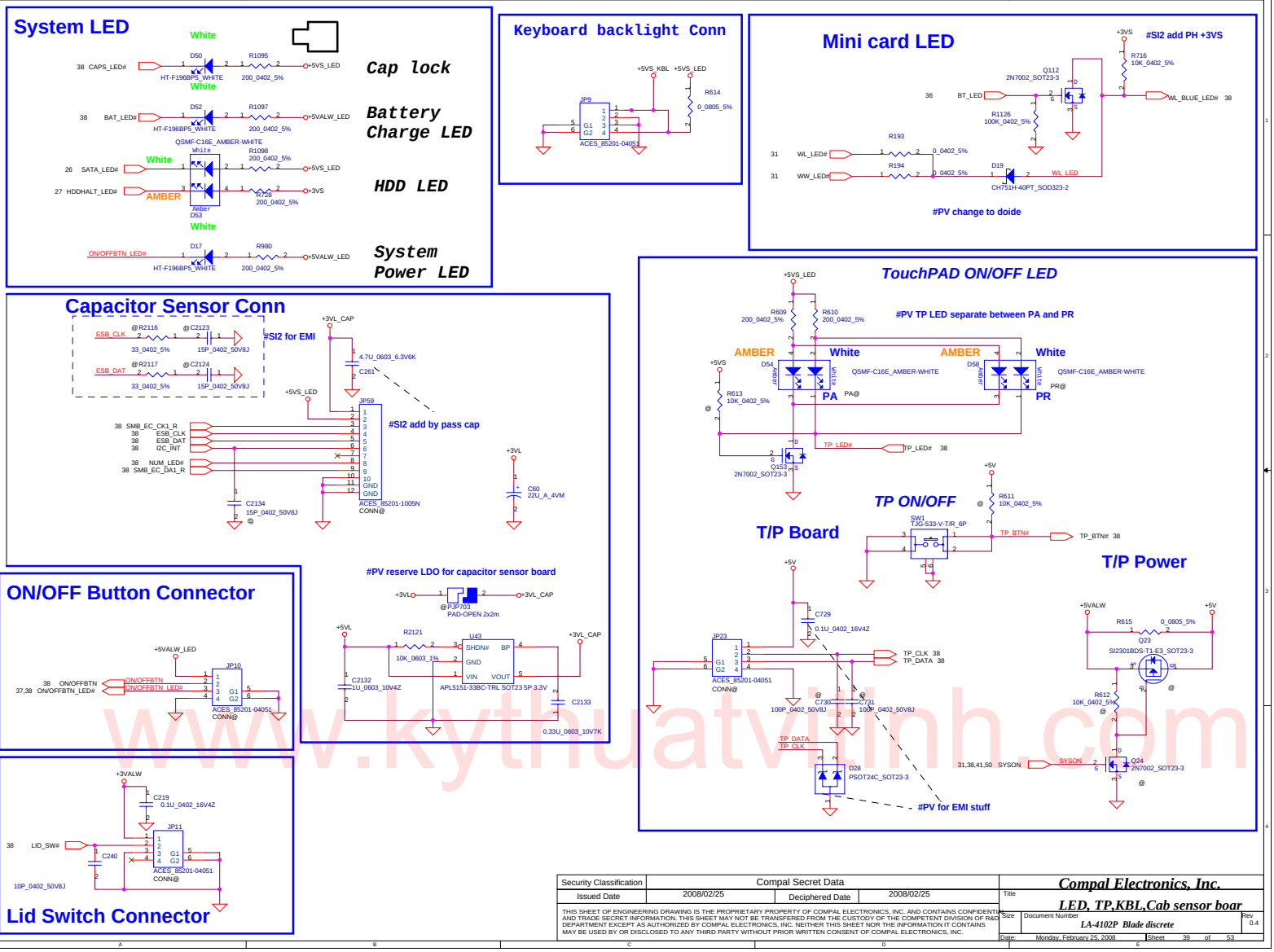

www.kythuatvinh.com

Security Classification	Compal Secret Data			Compal Electronics, Inc.
Issued Date	2008/02/25	Deciphered Date	2008/02/25	Title: LED, TP,KBL,Cab sensor boar

THIS SHEET OF ENGINEERING DRAWING IS THE PROPRIETARY PROPERTY OF COMPAL ELECTRONICS, INC. AND CONTAINS CONFIDENTIAL AND TRADE SECRET INFORMATION. THIS SHEET MAY NOT BE TRANSFERED FROM THE CUSTODY OF THE COMPETENT DIVISION OF R&D DEPARTMENT EXCEPT AS AUTHORIZED BY COMPAL ELECTRONICS, INC. NEITHER THIS SHEET NOR THE INFORMATION IT CONTAINS MAY BE USED BY OR DISCLOSED TO ANY THIRD PARTY WITHOUT PRIOR WRITTEN CONSENT OF COMPAL ELECTRONICS, INC.

Size	Document Number	Rev
	LA-4102P Blade discrete	0.4

Date: Monday, February 25, 2008 Sheet 39 of 53

Atlas/ Saturn Dock

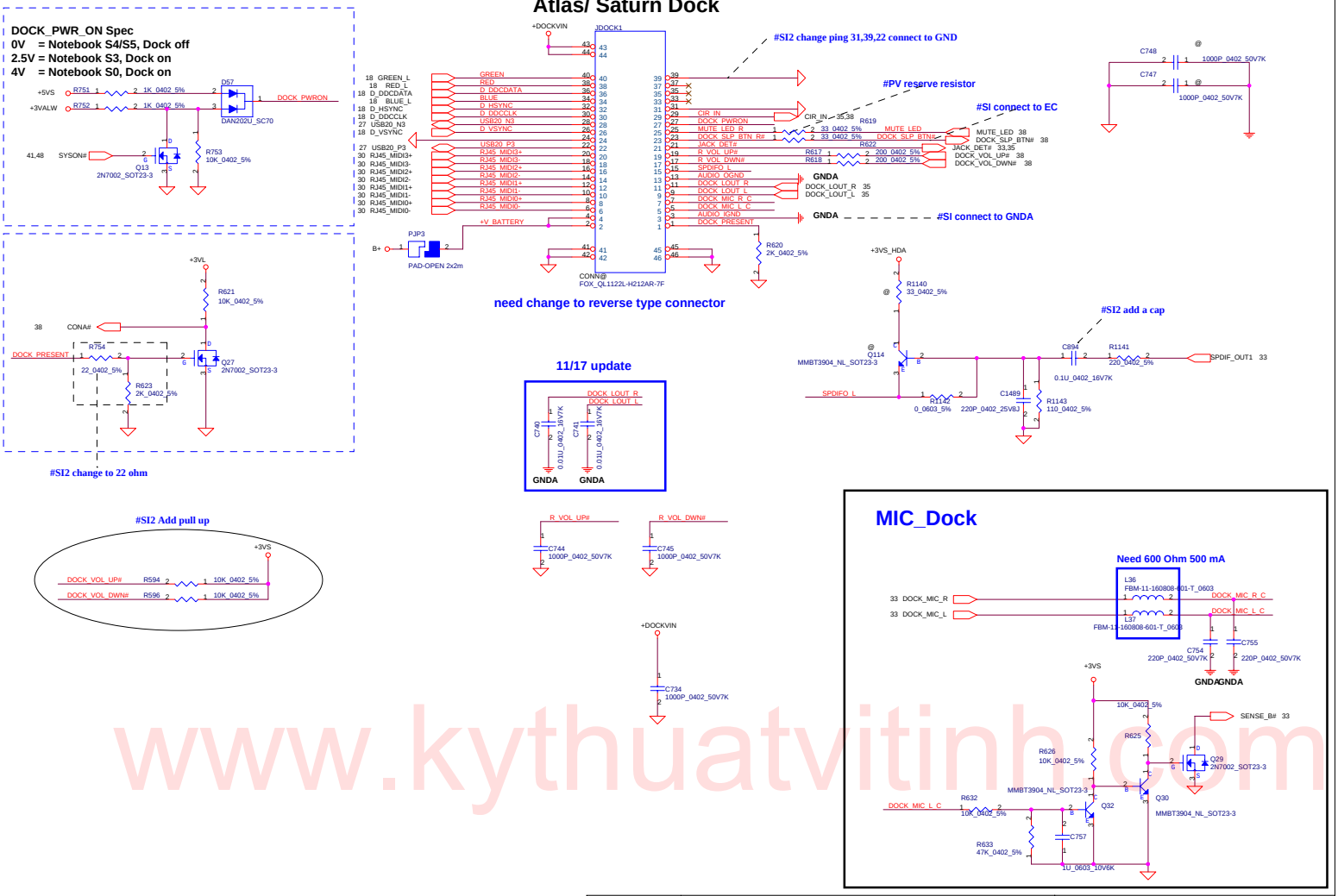

www.kythuatvitinh.com

Security Classification	Compal Secret Data		
Issued Date	2008/02/25	Deciphered Date	2008/02/25

THIS SHEET OF ENGINEERING DRAWING IS THE PROPRIETARY PROPERTY OF COMPAL ELECTRONICS, INC. AND CONTAINS CONFIDENTIAL AND TRADE SECRET INFORMATION. THIS SHEET MAY NOT BE TRANSFERED FROM THE CUSTODY OF THE COMPETENT DIVISION OF R&D DEPARTMENT EXCEPT AS AUTHORIZED BY COMPAL ELECTRONICS, INC. NEITHER THIS SHEET NOR THE INFORMATION IT CONTAINS MAY BE USED BY OR DISCLOSED TO ANY THIRD PARTY WITHOUT PRIOR WRITTEN CONSENT OF COMPAL ELECTRONICS, INC.

Compal Electronics, Inc.

Title: DOCK CONN.

Size: Custom | Document Number: LA-4102P Blade discrete | Rev: 0.4

Date: Monday, February 25, 2008 | Sheet 40 of 53

+5VALW to +5VS Transfer

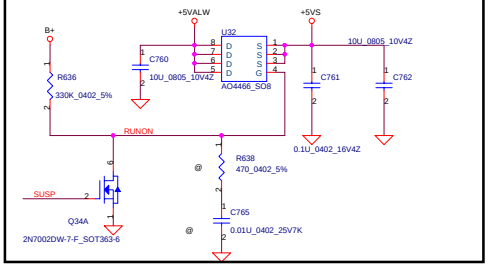

+3VALW to +3VS Transfer

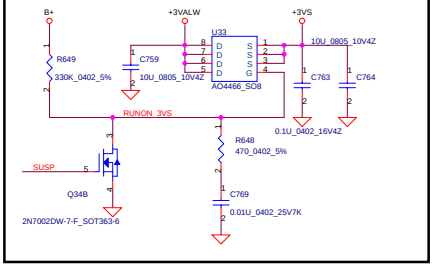

DIM LED

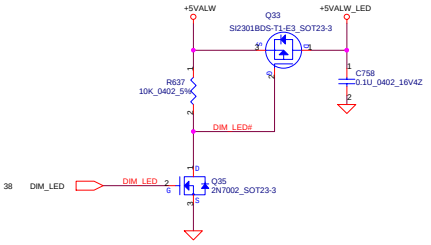

+1.8V to +1.8VS Transfer

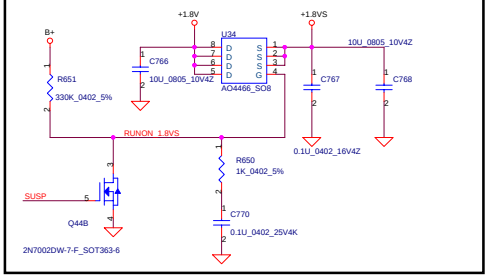

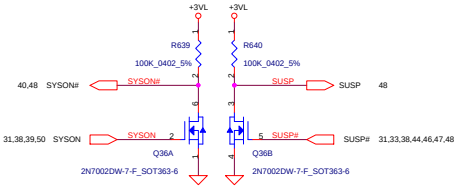

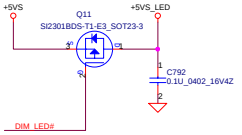

Discharge circuit

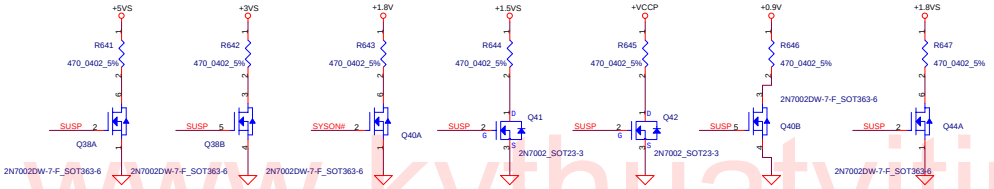

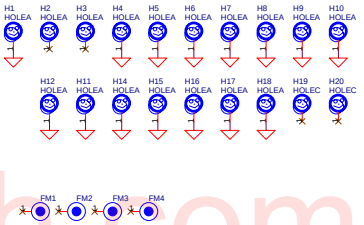

www.kythuatvitinh.com

Security Classification	Compal Secret Data			Compal Electronics, Inc.
Issued Date	2008/02/25	Deciphered Date	2008/02/25	Title: DC/DC Interface
				Size: Document Number: LA-4102P Blade discrete — Rev 0.4
				Date: Monday, February 25, 2008 — Sheet 41 of 53

THIS SHEET OF ENGINEERING DRAWING IS THE PROPRIETARY PROPERTY OF COMPAL ELECTRONICS, INC. AND CONTAINS CONFIDENTIAL AND TRADE SECRET INFORMATION. THIS SHEET MAY NOT BE TRANSFERED FROM THE CUSTODY OF THE COMPETENT DIVISION OF R&D DEPARTMENT EXCEPT AS AUTHORIZED BY COMPAL ELECTRONICS, INC. NEITHER THIS SHEET NOR THE INFORMATION IT CONTAINS MAY BE USED BY OR DISCLOSED TO ANY THIRD PARTY WITHOUT PRIOR WRITTEN CONSENT OF COMPAL ELECTRONICS, INC.

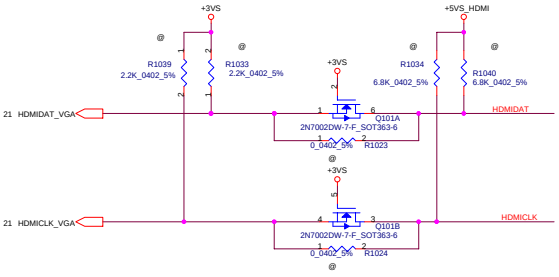

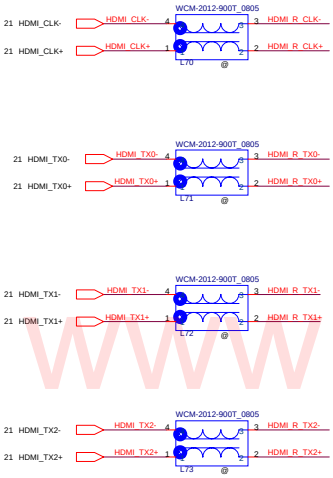

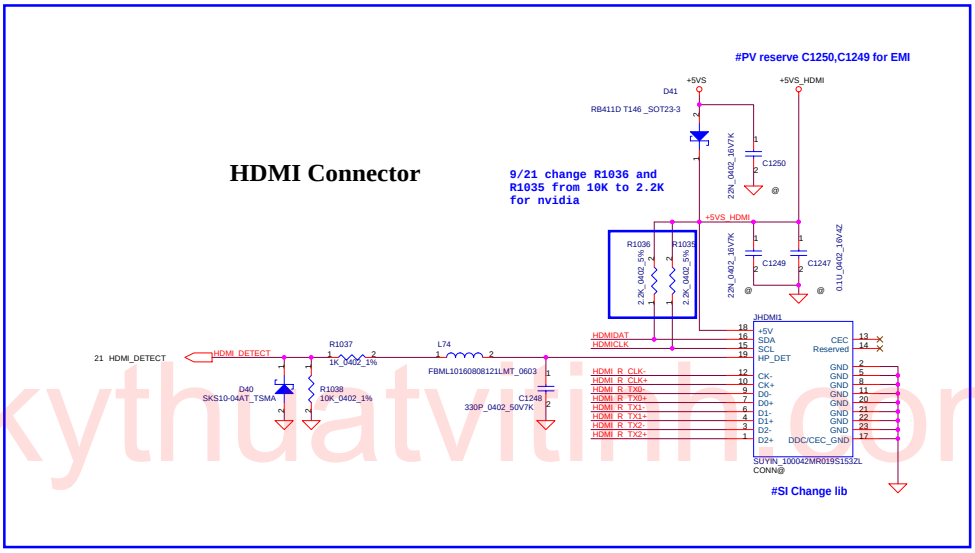

www.kythuatvitinh.com

Security Classification	Compal Secret Data			Compal Electronics, Inc.
Issued Date	2008/02/25	Deciphered Date	2008/02/25	Title: HDMI LS & Conn.

THIS SHEET OF ENGINEERING DRAWING IS THE PROPRIETARY PROPERTY OF COMPAL ELECTRONICS, INC. AND CONTAINS CONFIDENTIAL AND TRADE SECRET INFORMATION. THIS SHEET MAY NOT BE TRANSFERED FROM THE CUSTODY OF THE COMPETENT DIVISION OF R&D DEPARTMENT EXCEPT AS AUTHORIZED BY COMPAL ELECTRONICS, INC. NEITHER THIS SHEET NOR THE INFORMATION IT CONTAINS MAY BE USED BY OR DISCLOSED TO ANY THIRD PARTY WITHOUT PRIOR WRITTEN CONSENT OF COMPAL ELECTRONICS, INC.

Size	Document Number	Rev
Custom	LA-4102P Blade discrete	0.4

Date: Monday, February 25, 2008 Sheet 42 of 53

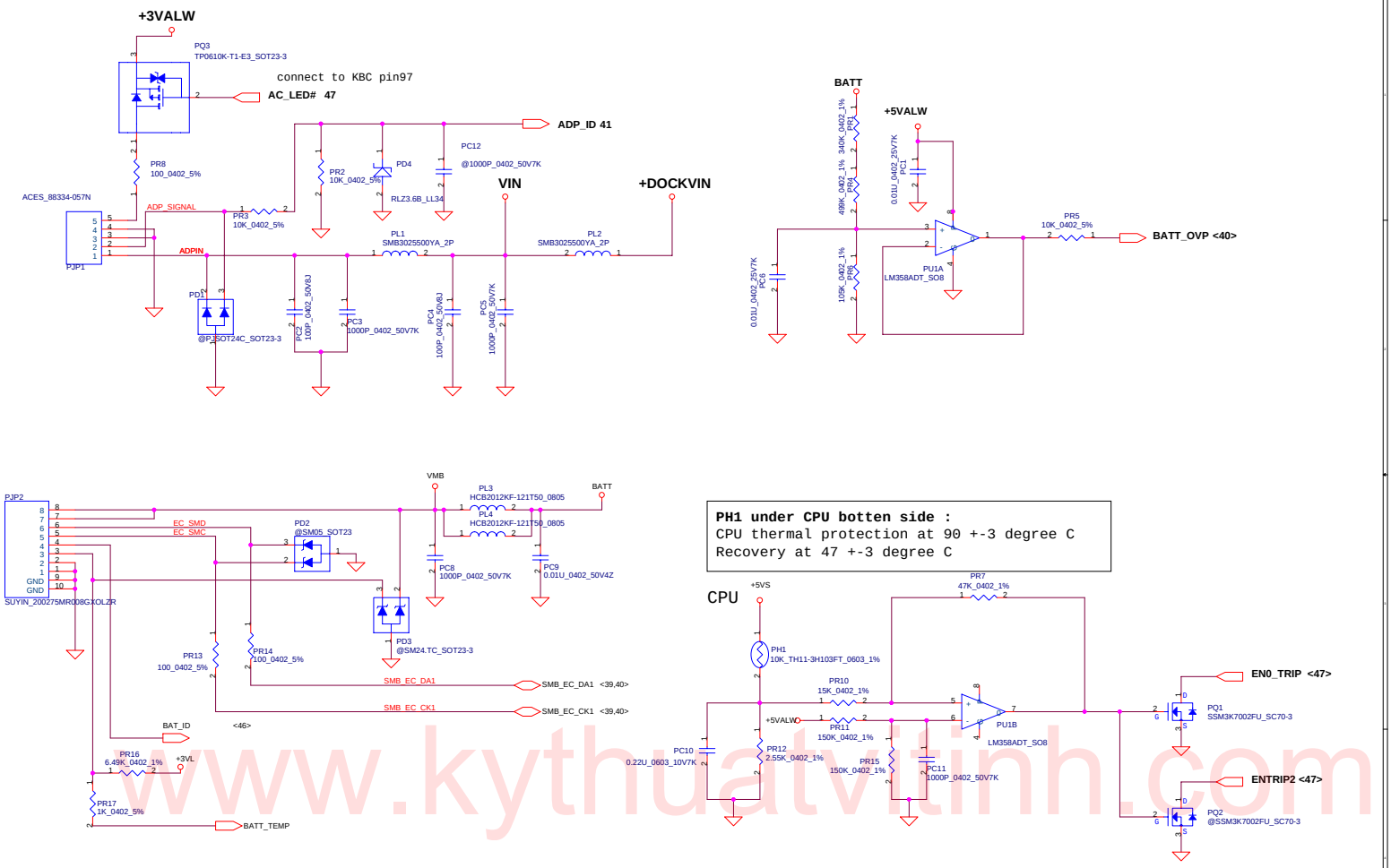

PH1 under CPU botten side :
CPU thermal protection at 90 +-3 degree C
Recovery at 47 +-3 degree C

www.kythuatvitinh.com

Security Classification	Compal Secret Data			Compal Electronics, Inc.
Issued Date	2008/02/25	Deciphered Date	2008/02/25	Title: DC Connector/CPU_OTP

THIS SHEET OF ENGINEERING DRAWING IS THE PROPRIETARY PROPERTY OF COMPAL ELECTRONICS, INC. AND CONTAINS CONFIDENTIAL AND TRADE SECRET INFORMATION. THIS SHEET MAY NOT BE TRANSFERED FROM THE CUSTODY OF THE COMPETENT DIVISION OF R&D DEPARTMENT EXCEPT AS AUTHORIZED BY COMPAL ELECTRONICS, INC. NEITHER THIS SHEET NOR THE INFORMATION IT CONTAINS MAY BE USED BY OR DISCLOSED TO ANY THIRD PARTY WITHOUT PRIOR WRITTEN CONSENT OF COMPAL ELECTRONICS, INC.

Size	Document Number	Rev
	LA-4102P Blade discrete	0.4

Date: Monday, February 25, 2008 Sheet 43 of 52

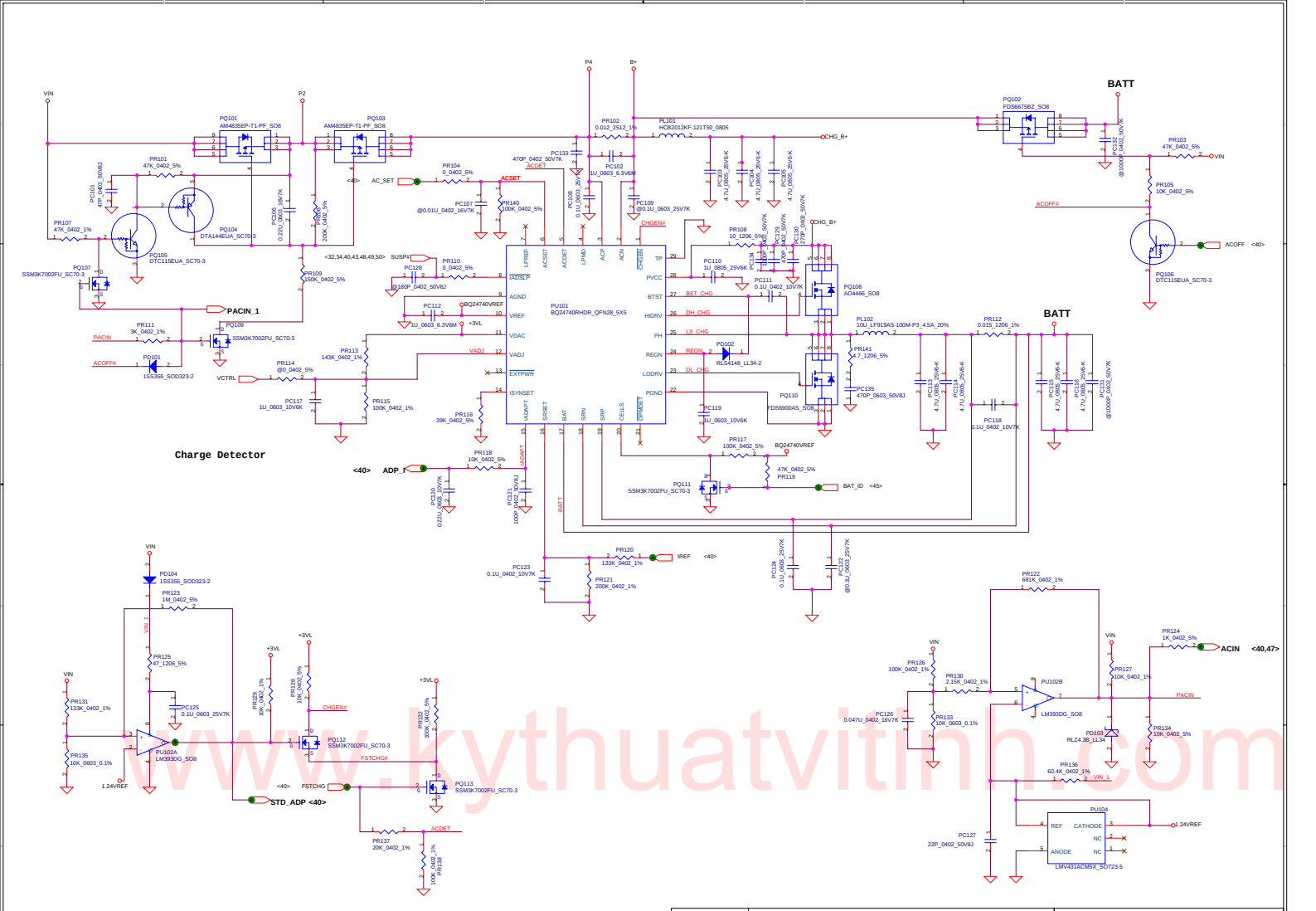

Security Classification	Compal Secret Data		
Issued Date	2008/02/25	Deciphered Date	2008/02/25

THIS SHEET OF ENGINEERING DRAWING IS THE PROPRIETARY PROPERTY OF COMPAL ELECTRONICS, INC. AND CONTAINS CONFIDENTIAL AND TRADE SECRET INFORMATION. THIS SHEET MAY NOT BE TRANSFERED FROM THE CUSTODY OF THE COMPETENT DIVISION OF R&D DEPARTMENT EXCEPT AS AUTHORIZED BY COMPAL ELECTRONICS, INC. NEITHER THIS SHEET NOR THE INFORMATION IT CONTAINS MAY BE USED BY OR DISCLOSED TO ANY THIRD PARTY WITHOUT PRIOR WRITTEN CONSENT OF COMPAL ELECTRONICS, INC.

Compal Electronics, Inc.

Title: *Charger*

Size	Document Number	Rev
	LA-4102P Blade discrete	0.4

Date: Monday, February 25, 2008 Sheet 44 of 52

www.kythuatvitinh.com

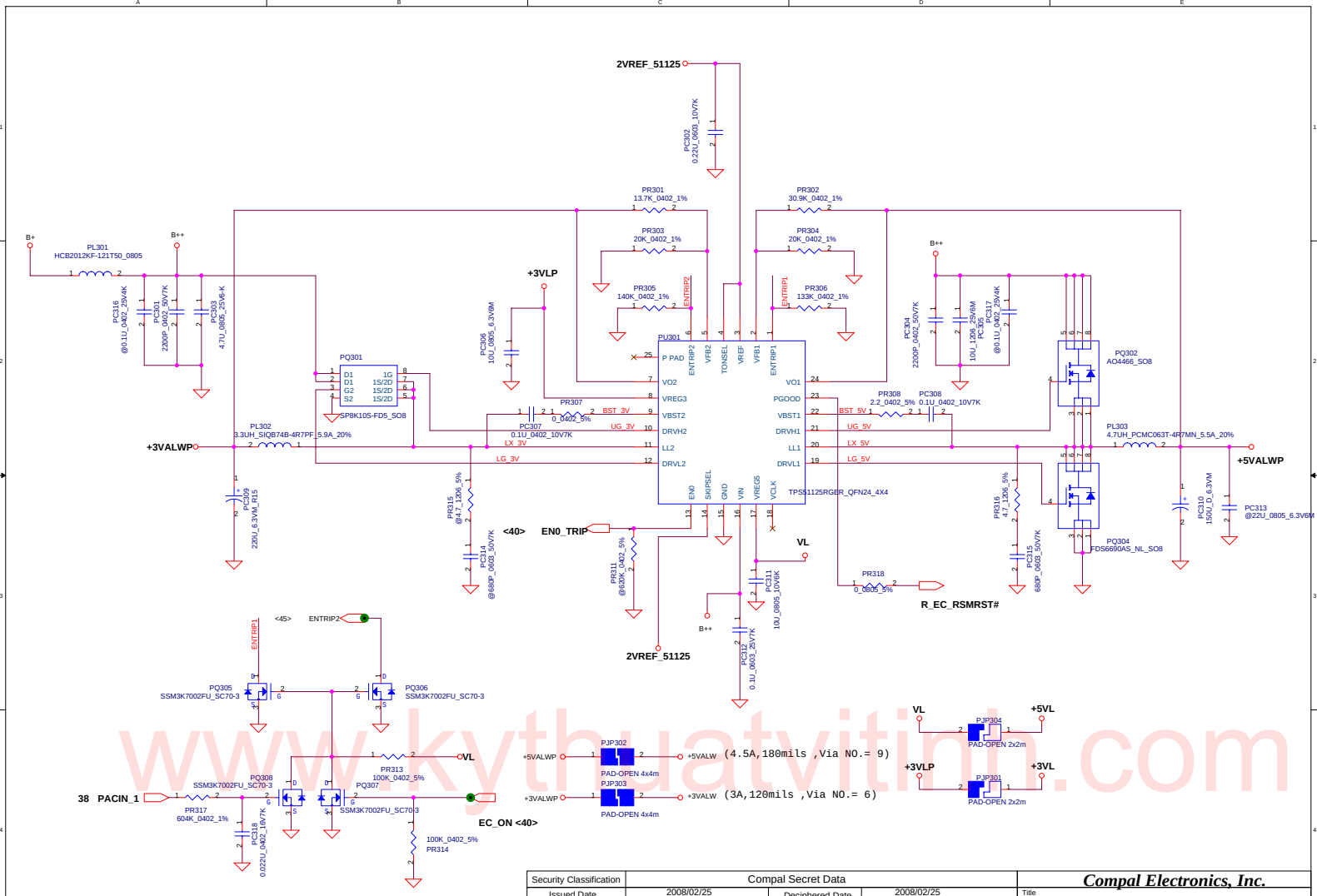

www.kythuatvitinh.com

Security Classification	Compal Secret Data		
Issued Date	2008/02/25	Deciphered Date	2008/02/25

THIS SHEET OF ENGINEERING DRAWING IS THE PROPRIETARY PROPERTY OF COMPAL ELECTRONICS, INC. AND CONTAINS CONFIDENTIAL AND TRADE SECRET INFORMATION. THIS SHEET MAY NOT BE TRANSFERED FROM THE CUSTODY OF THE COMPETENT DIVISION OF R&D DEPARTMENT EXCEPT AS AUTHORIZED BY COMPAL ELECTRONICS, INC. NEITHER THIS SHEET NOR THE INFORMATION IT CONTAINS MAY BE USED BY OR DISCLOSED TO ANY THIRD PARTY WITHOUT PRIOR WRITTEN CONSENT OF COMPAL ELECTRONICS, INC.

Compal Electronics, Inc.

Title: **3.3VALWP/5VALWP**

Size | Document Number: *LA-4102P Blade discrete* | Rev: 0.4

Date: Monday, February 25, 2008 | Sheet 45 of 52

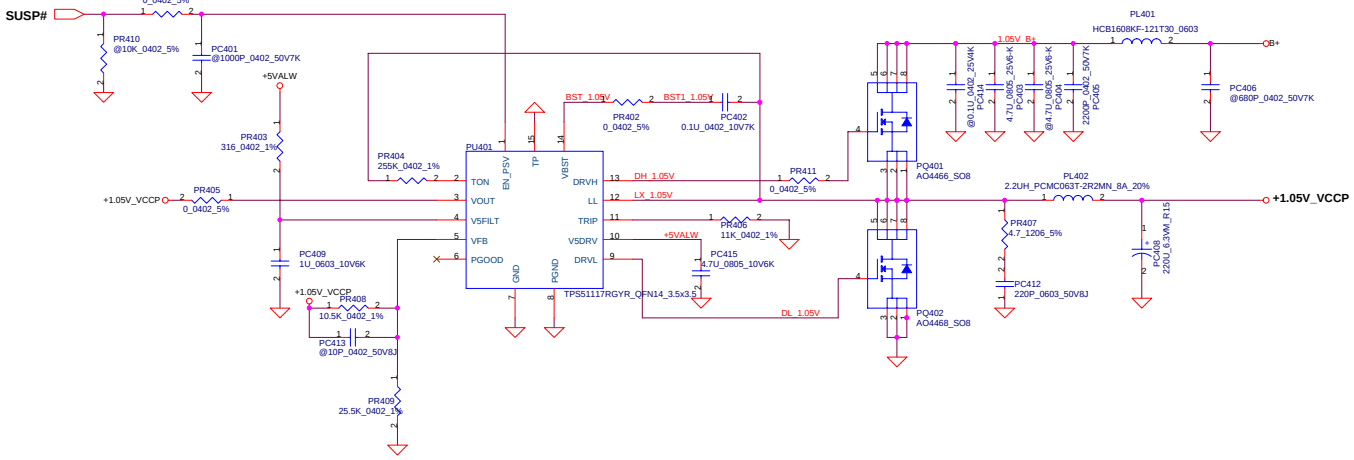

www.kythuatvitinh.com

Security Classification	Compal Secret Data		
Issued Date	2008/02/25	Deciphered Date	2008/02/25

THIS SHEET OF ENGINEERING DRAWING IS THE PROPRIETARY PROPERTY OF COMPAL ELECTRONICS, INC. AND CONTAINS CONFIDENTIAL AND TRADE SECRET INFORMATION. THIS SHEET MAY NOT BE TRANSFERED FROM THE CUSTODY OF THE COMPETENT DIVISION OF R&D DEPARTMENT EXCEPT AS AUTHORIZED BY COMPAL ELECTRONICS, INC. NEITHER THIS SHEET NOR THE INFORMATION IT CONTAINS MAY BE USED BY OR DISCLOSED TO ANY THIRD PARTY WITHOUT PRIOR WRITTEN CONSENT OF COMPAL ELECTRONICS, INC.

Compal Electronics, Inc.

Title: **1.05V_VCCP**

Size | Document Number: *LA-4102P Blade discrete* | Rev: 0.4

Date: Monday, February 25, 2008 | Sheet 46 of 52

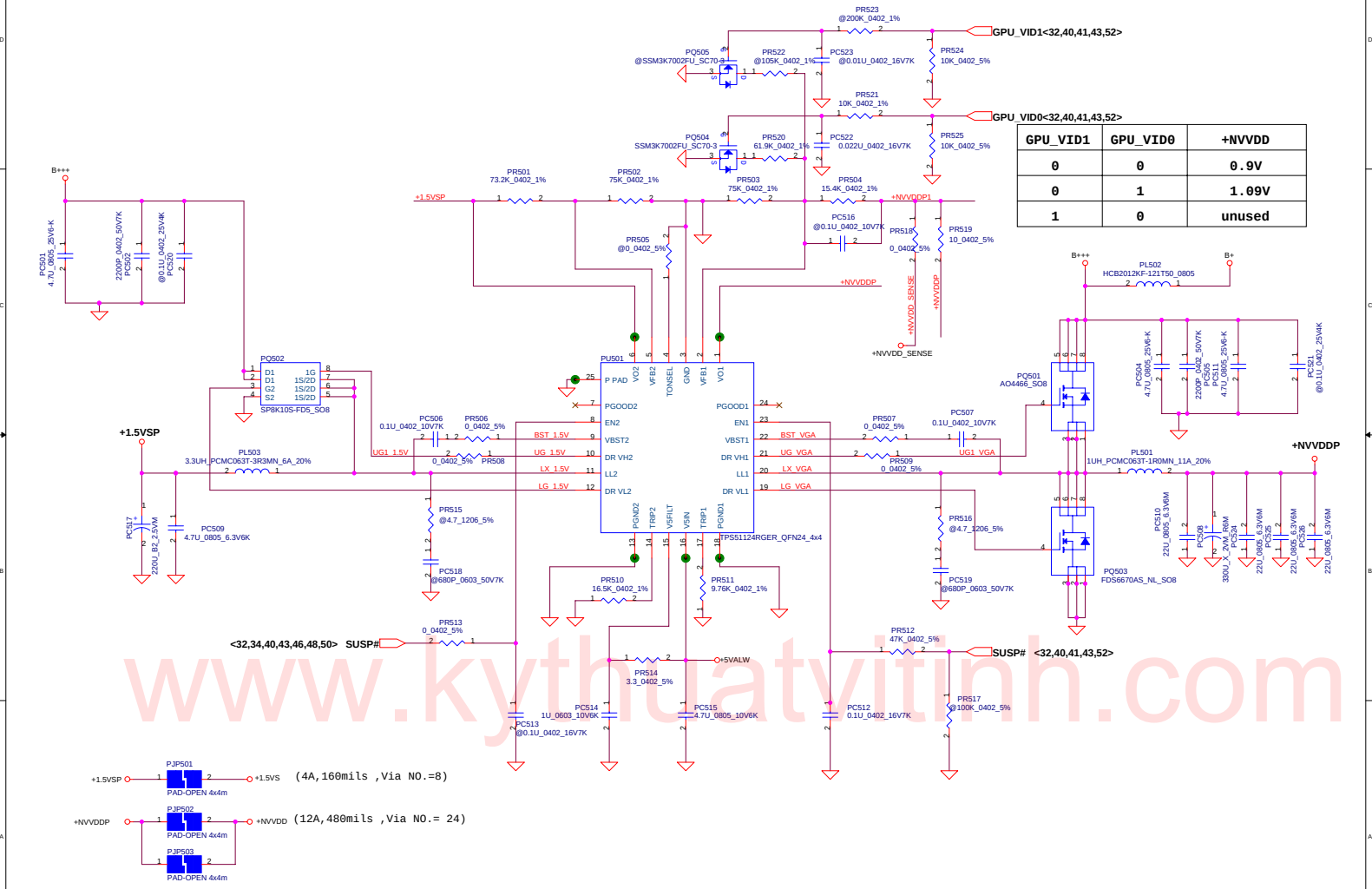

GPU_VID1	GPU_VID0	+NVVDD
0	0	0.9V
0	1	1.09V
1	0	unused

www.kythuatvitinh.com

Security Classification	Compal Secret Data		
Issued Date	2008/02/25	Deciphered Date	2008/02/25

THIS SHEET OF ENGINEERING DRAWING IS THE PROPRIETARY PROPERTY OF COMPAL ELECTRONICS, INC. AND CONTAINS CONFIDENTIAL AND TRADE SECRET INFORMATION. THIS SHEET MAY NOT BE TRANSFERED FROM THE CUSTODY OF THE COMPETENT DIVISION OF R&D DEPARTMENT EXCEPT AS AUTHORIZED BY COMPAL ELECTRONICS, INC. NEITHER THIS SHEET NOR THE INFORMATION IT CONTAINS MAY BE USED BY OR DISCLOSED TO ANY THIRD PARTY WITHOUT PRIOR WRITTEN CONSENT OF COMPAL ELECTRONICS, INC.

Compal Electronics, Inc.

Title: **1.5VSP/VGA_CORE**

Size: | Document Number: *LA-4102P Blade discrete* | Rev: 0.4

Date: Monday, February 25, 2008 | Sheet 47 of 52

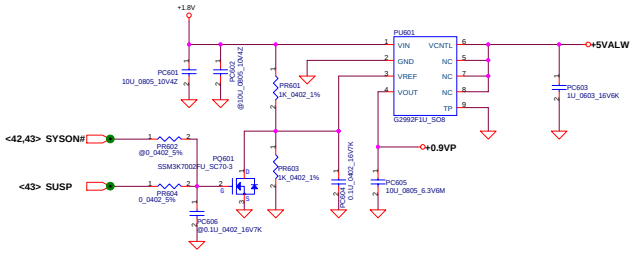

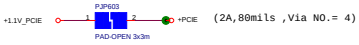

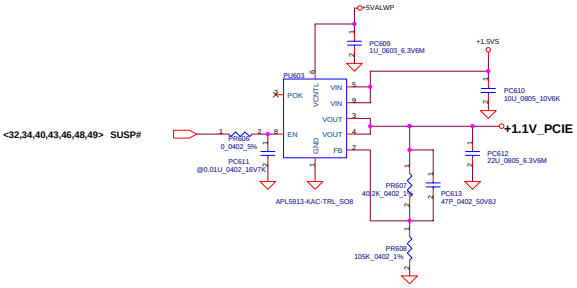

www.kythuatvitinh.com

Security Classification	Compal Secret Data		
Issued Date	2008/02/25	Deciphered Date	2008/02/25

THIS SHEET OF ENGINEERING DRAWING IS THE PROPRIETARY PROPERTY OF COMPAL ELECTRONICS, INC. AND CONTAINS CONFIDENTIAL AND TRADE SECRET INFORMATION. THIS SHEET MAY NOT BE TRANSFERED FROM THE CUSTODY OF THE COMPETENT DIVISION OF R&D DEPARTMENT EXCEPT AS AUTHORIZED BY COMPAL ELECTRONICS, INC. NEITHER THIS SHEET NOR THE INFORMATION IT CONTAINS MAY BE USED BY OR DISCLOSED TO ANY THIRD PARTY WITHOUT PRIOR WRITTEN CONSENT OF COMPAL ELECTRONICS, INC.

Compal Electronics, Inc.

Title: 0.9VP/1.1V_PCIE

Size: | Document Number: LA-4102P Blade discrete | Rev: 0.4

Date: Monday, February 25, 2008 | Sheet 48 of 52

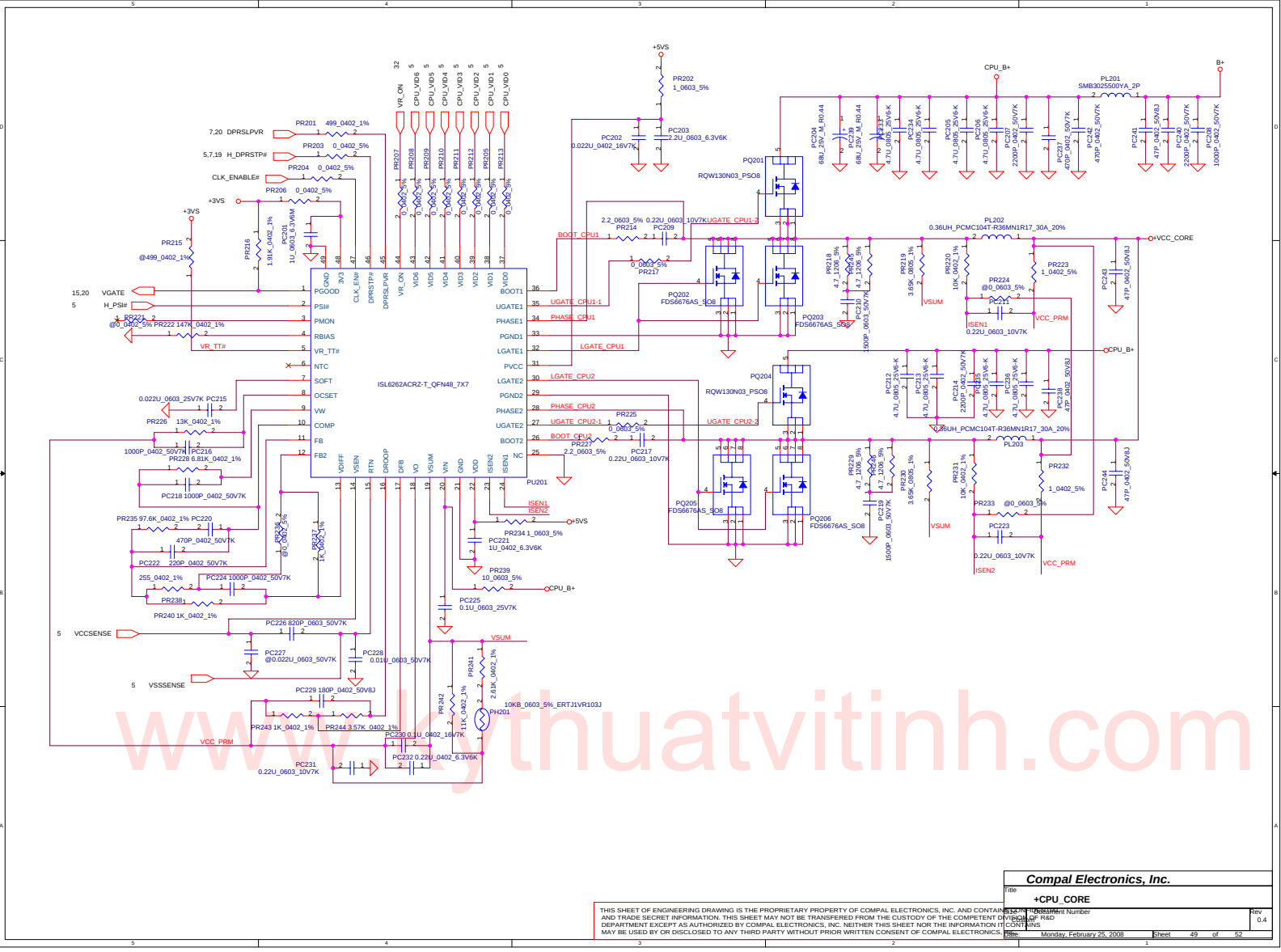

www.kythuatvitinh.com

Compal Electronics, Inc.

Title: +CPU_CORE

Size: A3 | Document Number: | Rev: 0.4

Date: Monday, February 25, 2008 | Sheet 49 of 52

THIS SHEET OF ENGINEERING DRAWING IS THE PROPRIETARY PROPERTY OF COMPAL ELECTRONICS, INC. AND CONTAINS CONFIDENTIAL AND TRADE SECRET INFORMATION. THIS SHEET MAY NOT BE TRANSFERED FROM THE CUSTODY OF THE COMPETENT DIVISION OF R&D DEPARTMENT EXCEPT AS AUTHORIZED BY COMPAL ELECTRONICS, INC. NEITHER THIS SHEET NOR THE INFORMATION IT CONTAINS MAY BE USED BY OR DISCLOSED TO ANY THIRD PARTY WITHOUT PRIOR WRITTEN CONSENT OF COMPAL ELECTRONICS, INC.

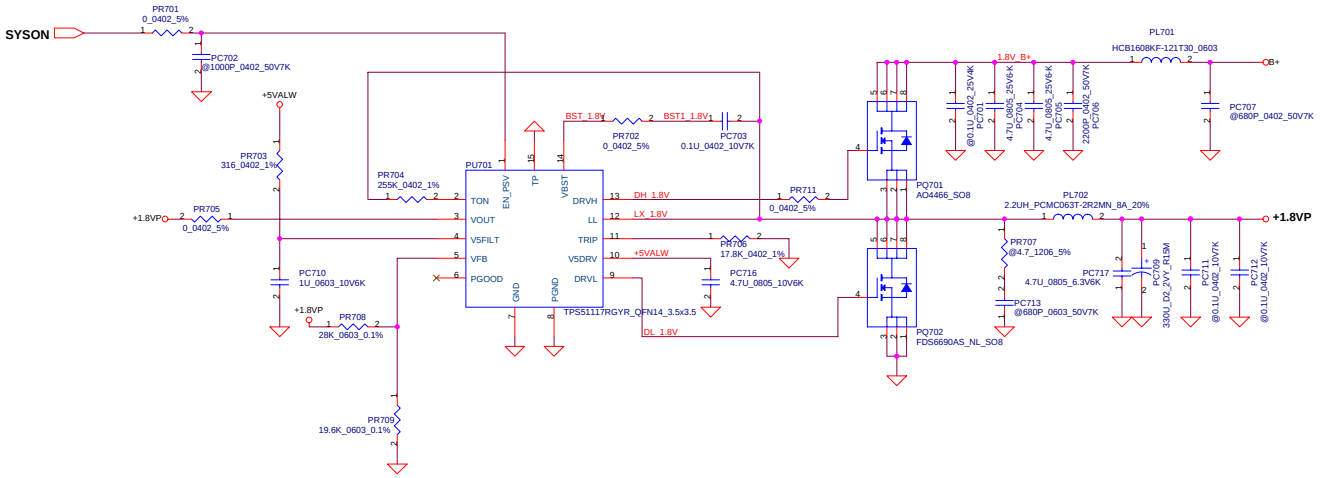

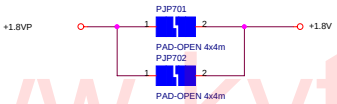

(7A,280mils ,Via NO.= 14)

www.kythuatvitinh.com

Security Classification	Compal Secret Data		
Issued Date	2008/02/25	Deciphered Date	2008/02/25

THIS SHEET OF ENGINEERING DRAWING IS THE PROPRIETARY PROPERTY OF COMPAL ELECTRONICS, INC. AND CONTAINS CONFIDENTIAL AND TRADE SECRET INFORMATION. THIS SHEET MAY NOT BE TRANSFERED FROM THE CUSTODY OF THE COMPETENT DIVISION OF R&D DEPARTMENT EXCEPT AS AUTHORIZED BY COMPAL ELECTRONICS, INC. NEITHER THIS SHEET NOR THE INFORMATION IT CONTAINS MAY BE USED BY OR DISCLOSED TO ANY THIRD PARTY WITHOUT PRIOR WRITTEN CONSENT OF COMPAL ELECTRONICS, INC.

Compal Electronics, Inc.

Title: **1.8VP**

Size | Document Number: *LA-4102P Blade discrete* | Rev: 0.4

Date: Monday, February 25, 2008 | Sheet 50 of 52

Version Change List (P. I. R. List) for Power Circuit

Item	Page#	Title	Date	Request Owner	Issue Description	Solution Description	Rev.
1	43	DC Connector /CPU_OTP	11/06	Compal	Add PD4 & PC12	Add PD4 & PC12	
2	45	3.3VALWP/5VALWP	11/06	Compal	for Layout	Change PQ301, cancel PQ303.	
3	44	Charger	11/06	Compal	EMI solution	Add PC128	
4	49	CPU_CORE	11/06	Compal	EMI solution	Add PC240	
5	47	1.5VSP/VGA_CORE	11/06	Compal	for VGA voltage steps	Add PQ505, PR523, PR524, PR525	
6	45	3.3VALWP/5VALWP	12/31	Compal	PWR request	Add PU302, control signal changed to ACOFF	
7	44	Charger	12/31	Compal	EMI solution	Add PC129, PC130, PC131, PC132, PC133	
8	49	+CPU_CORE	12/31	Compal	EMI solution	Add PC242	
9	47	+1.5VSP/VGA COREP	01/02	Compal	HW request	Change PR513 to 0_ohm	
10	44	Charger	01/02	Compal	EMI solution	Add PC135 and PR141	
11	49	+CPU_CORE	02/15	Compal	Change high-side MOS for WWAN	Change PQ201 and PQ204 to powerpak	
12	43	DC Connector /CPU_OTP	02/15	Compal	AC LED change to KBC control	ACLED# connect to EC pin 97	
13	43	DC Connector /CPU_OTP	02/19	Compal	WWAM issue	add PC241 47pF	
14	49	+CPU_CORE	02/19	Compal	WWAM issue	add PC243 PC244 47pF	

www.kythuatvitinh.com

Security Classification	Compal Secret Data		
Issued Date	2008/02/25	Deciphered Date	2008/02/25

THIS SHEET OF ENGINEERING DRAWING IS THE PROPRIETARY PROPERTY OF COMPAL ELECTRONICS, INC. AND CONTAINS CONFIDENTIAL AND TRADE SECRET INFORMATION. THIS SHEET MAY NOT BE TRANSFERED FROM THE CUSTODY OF THE COMPETENT DIVISION OF R&D DEPARTMENT EXCEPT AS AUTHORIZED BY COMPAL ELECTRONICS, INC. NEITHER THIS SHEET NOR THE INFORMATION IT CONTAINS MAY BE USED BY OR DISCLOSED TO ANY THIRD PARTY WITHOUT PRIOR WRITTEN CONSENT OF COMPAL ELECTRONICS, INC.

Compal Electronics, Inc.

Title: Power Changed-List History-1

Size: Custom | Document Number: LA-4102P Blade discrete | Rev: 0.4

Date: Monday, February 25, 2008 | Sheet 51 of 52

Item	Fixed Issue (Reason for change)	PAGE	Modify List	Date	Phase
1	Transation Fail	08	C41、C42、C43、C44 Change ESR=7m ohm	11/21	DB
2	Disable TV out function from Docking	20	TV signal unconnected,DACB_VDD pull low 10K (R948).	11/07	DB
3	Update Connetor Library		CRT(JCRT1)、HDMI(JHDMI1)、ESATA(JP53)、Finger print(JJP24)、FAN(JP2)、Speaker(JP60)、Multi bay(JP12)、Dual LED(D53、D54	11/17	DB
4	Delete LVDS B channel	19,20	Schematic Delete	11/17	DB
5	USB camera Footprint error	19	Change U42 to G916-390T1UF SOT23, it adjustable mode, R1091=215K, R1093=100K,Add GPIO 20 to turn off power	11/07	DB
6	Reserve Card reader D3E function	27,32	GPIO6= CR_CPPE#, GPIO22=CR_WAKE#	11/17	DB
7	Swap PCIE LAN and New card	27	Swap PCIE4 and PICE6	11/17	DB
8	Change GPU 1.8VS power	20、21	Change 1.8VS to +VDD_MEM18	11/17	DB
9	Change G sensor control from SB、LED drive by +5VS	27、39	Change G sensor control from SB	11/17	DB
10	Avoid Battery mode can't boot issue	38、45	Add +3VALW GD to EC_RSMRST# to fix Battery mode can't boot issue	11/17	DB
11	Add G sensor ST and Bosch	37	Add G sensor ST and Bosch	11/17	DB
12	Change LAN solution (Marvell to Realtek)	30	Change LAN solution (Marvell to Realtek)	11/17	DB
13	LAN transformer interfere	30	U19 Change to correct transformer type	11/17	DB
14	Cardreader schematic review,add D3E function	32	R709-->10K、R1047-->8.2K、R1128-->Stuff、R705-->@、U37-->@、Cardreader LED-->+5VS、add D3E function	11/17	DB
15	Jack can't detect normal	33	R1059 change from 39.2 to 39.2K	11/17	DB
16	Docking can not power on	40	Add power on circuit D57,Q13R751,R752,R753	11/17	DB
17	HP audio team recommend	33、35	C1480~C1487、C1352、C1354 change to 0.022U、Amp output setup to 15.6 dB、Reserve C747、C748 for GNDA and GND	11/17	DB
18	Audio jack can't detect normal	35	Add Pull up resistor R750 to +3VALW	11/17	DB
19	Docking HP audio test fail	35	Add C795、C796 to avoid DC level, and add R968、R969 to reduce HP out level	11/17	DB
20	Leakage problem	38	Correct direction pretect leakage	11/07	DB
21	EC pin define update	38	Delete EC_PME#、SYSON PU、SUSP# PU、LID_SW# change to +3VALW、Delete CLKRUN#、R582->@ for C0 chip、CIR PU+5VL、add 100P to BATT_OVP(EC recommend)	11/07	DB
22	Can't Hibernation(SLP_S4#)	38	Connect SLP_S4# to SB	11/17	DB
23	EC can't receive docking present	40	CONA# change +3VL	11/12	DB
24	Reserve capacitor on digital MIC for EMI request	19	Add C496,C498	11/07	DB
25	Add 2N7002 to GND on HDMI to avoid leakage.	21	Add Q74	01/04	SI
26	+VDD_MEM18 to +1.8VS, change to jummper	22	Delete R1124,R1125 add PJP605	01/04	SI
27	HDCP ROM fail. HDCP_SCL need pull high.	22	R224 no stuff. R213 stuff.	01/04	SI
28	Reserve capacitor on digital MIC for SED. WWAN noise	26	Add C499,C502	01/04	SI

www.kythuatvitinh.com

Security Classification	Compal Secret Data		Compal Electronics, Inc.
Issued Date	2008/02/25	Deciphered Date 2008/02/25	Title HW PIR

THIS SHEET OF ENGINEERING DRAWING IS THE PROPRIETARY PROPERTY OF COMPAL ELECTRONICS, INC. AND CONTAINS CONFIDENTIAL AND TRADE SECRET INFORMATION. THIS SHEET MAY NOT BE TRANSFERED FROM THE CUSTODY OF THE COMPETENT DIVISION OF R&D DEPARTMENT EXCEPT AS AUTHORIZED BY COMPAL ELECTRONICS, INC. NEITHER THIS SHEET NOR THE INFORMATION IT CONTAINS MAY BE USED BY OR DISCLOSED TO ANY THIRD PARTY WITHOUT PRIOR WRITTEN CONSENT OF COMPAL ELECTRONICS, INC.

Size	Document Number LA-4102P Blade discrete		Rev 0.4
Date: Monday, February 25, 2008		Sheet 52 of 53	

Item	Fixed Issue (Reason for change)	PAGE	Modify List	Date	Phase
1	Change transformer vendor	30	change U19 library	01/04	SI
2	XMIT_OFF add a diode to avoid leakage.	31	Add D88	01/04	SI
3	Card reader recommend	32	XD_ALE need pull +3VS not pull low.	01/04	SI
4	change Q54 from transistor to MOS for cardreader LED.	32	Change Q54	01/04	SI
5	speaker pop issue	35	Change C1488 to 1U	01/04	SI
6	Reserve capacitor on SPI_FSEL#,CLK#,FER for EMI request	36	Add C2125,C2126,C2127	01/04	SI
7	Change EC_PME pull high from +3VL to +3VALW	38	R585 stuff	01/04	SI
8	Reserve damping resistor on SPI_CLK for EMI request	38	Add R191	01/04	SI
9	WLAN LED issue,WL_BLUE_LED# pull +3VS	39	Add R716	01/04	SI
10	Add bypass capacitance on sensor bottom	39	Add C261(4.7U)	01/04	SI
11	EC can't detect DOCK_PRESENT.	40	change R754 to 22 Ohm,R623 to 2K	01/04	SI
12	Add DOCK_VOL_UP#,DOCK_VOL_Down# pull +3VS	40	Add R594,R596	01/04	SI
13	SPDIF issue	40	follow Vader	01/04	SI
14	Docking CRT blurred	40	Change ping 31,39,22 connect to GND	01/04	SI
15	Change R650 and C770 to modify the power sequence	41	change R650 to 1K, C770 to 0.1u	01/04	SI
16	Add 12P on CLK_14M_ICH for WWAN noise	17	Add 12P on CLK_14M_ICH	02/15	PV
17	BKOFF# reserve pull low 10K	19	reserve R717	02/15	PV
18	Reserve CMD27 to support 64M X16	7,8	Reserve CMD27 to support 64M X16	02/15	PV
19	Reserve cap on HDA_BITCLK for WWAN noise issue	26	Reserve cap on HDA_BITCLK	02/15	PV
20	Reserve to prevent ESD issue	30	Reserve ESD diode on LAN LED pin	02/15	PV
21	Change WLAN and WWAN 0402 resistor to 0805	31	Change WLAN and WWAN 0402 resistor to 0805, and WLAN change to +3VS power plane	02/15	PV
22	Direct drive LED, and add D3E function diode	32	Direct drive LED and XD_ALE Pull L, and add D86 for D3E function	02/15	PV
23	Change R1092 value on BT power switch Gate	36	Change R1092 to 10K	02/15	PV
24	Correct AC_LED control by EC	38	AC_LED Change controll by EC	02/15	PV
25	Change all LED limit current resistor to 200 ohm	39	Change all LED limit current resistor to 200 ohm and add Touch pad LED for PR	02/15	PV
26	Add 33 ohm for MUTE_LED and DOCK_SLP_BTN#	40	Add 33 ohm for MUTE_LED and DOCK_SLP_BTN#	02/15	PV
27	follow check list ver:1.5	6	change R13 to 56 ohm;change R2~R8 to 51 ohm;change R11 to 0ohm	02/20	PV
28	Reserve Cap for EMI	42	add C1250,C1249	02/20	PV

www.kythuatvitinh.com

THIS SHEET OF ENGINEERING DRAWING IS THE PROPRIETARY PROPERTY OF COMPAL ELECTRONICS, INC. AND CONTAINS CONFIDENTIAL AND TRADE SECRET INFORMATION. THIS SHEET MAY NOT BE TRANSFERED FROM THE CUSTODY OF THE COMPETENT DIVISION OF R&D DEPARTMENT EXCEPT AS AUTHORIZED BY COMPAL ELECTRONICS, INC. NEITHER THIS SHEET NOR THE INFORMATION IT CONTAINS MAY BE USED BY OR DISCLOSED TO ANY THIRD PARTY WITHOUT PRIOR WRITTEN CONSENT OF COMPAL ELECTRONICS, INC.

Item	Fixed Issue (Reason for change)	PAGE	Modify List	Date	Phase
1	follow check list Ver:1.5	17	reserve R148	02/15	PV
2	follow check list Ver:1.5	9	change R45,R48 to 10K	02/15	PV
3	boot code "88" power sequence faill	27	add Diode from PWROK to RSMRST	02/15	PV
4	Change BT,LAN,DOCK,Multibay connect for DFX			02/15	PV
5	Change WWAN and WLAN LED	39		02/15	PV
6	For EMI	37	SPI_CLK add R2118 , R2119 , R2120 => 33ohm add C2125 , C2126 , C2127 => 22pF;R553, 554, 556 =>10ohm	02/15	PV
7	For EMI	30	LAN add C656 and C657 => o.1uF	02/15	PV
8	For EMI	39	T/P add D28 and C729	02/15	PV
9					
10					
11					
12					
13					
14					
15					
16					
17					
18					
19					
20					
21					
22					
23					
24					
25					
26					
27					
28					

www.kythuatvitinh.com