DIABLO 13.3"

SI Build

2007.10.11

DATE	CHANGE NO.	REV

	EE	DATE	POWER	DATE
DRAWER				
DESIGN				
CHECK				
RESPONSIBLE				

SIZE = 3 VER :

FILE NAME : XXXX-XXXXXX-XX

P/N XXXXXXXXXXXX

INVENTEC

TITLE *DIABLO*

SIZE	CODE	DOC. NUMBER	REV
A3	CS	*Model_No*	*AX1*

SHEET 1 OF 61

TABLE OF CONTENTS

PAGE
5- DC& BATTERY CHARGER
6- BATTERY CONN
7- SYSTEM POWER(3V/5V)
8- SYSTEM POWER(+V1.8/+V1.25S)
9- GRAPHIC POWER(+VGFX_CORE)
10- SYSTEM POWER(+VCCP/+V1.5S)
11- CPU POWER(VCC_CORE)
12- DDR TERMINATION VOLTAGE
13- POWER(SLEEP)
14- POWER(SEQUENCE)

PAGE
15- CLOCK_ICS9LPRS355BGLFT
16- MEROM-1
17- MEROM-2
18- MEROM-3
19- THERMAL & FAN Conn
20- Crestline-1
21- Crestline-2
22- Crestline-3
23- Crestline-4
24- Crestline-5
25- Crestline-6
26- DDR2-DIMM0
27- DDR2-DIMM1
28- DDR2-DAMPING
29- CRT CONN
30- LCM CONN
31- ICH8-1
32- ICH8-2
33- ICH8-3
34- ICH8-4
35- ICH8-5

PAGE
36-
37- HDD&ODD CONN
38- USB CONN
39- KBC & IR & SPI BIOS & T/P Conn
40- KB&TP Disable CONN
41- AUDIO CODEC
42- AUDIO AMP-HP MIC VOL
43- MDC CONN & Audio Jack
44- LAN CONTROLLER- RTL8111C
45- LAN POWER
46- RJ45 CONN
47- MINICARD CONN
48- HDMI CONN & NEW CARD CONN
49- LED & BUTTON
50- SCREW
51- TOUCHPAD BOARD
52- WEB CAM & FINGER PRINT Conn
53- AU6371 Cardreader & 4 IN 1 Conn
54- External Board
55- nVIDIA NB8MGS-1
56- nVIDIA NB8MGS-2
57- nVIDIA NB8MGS-3
58- nVIDIA NB8MGS-4
59- nVIDIA NB8MGS-5
60- VRAM-1
61- VRAM-2

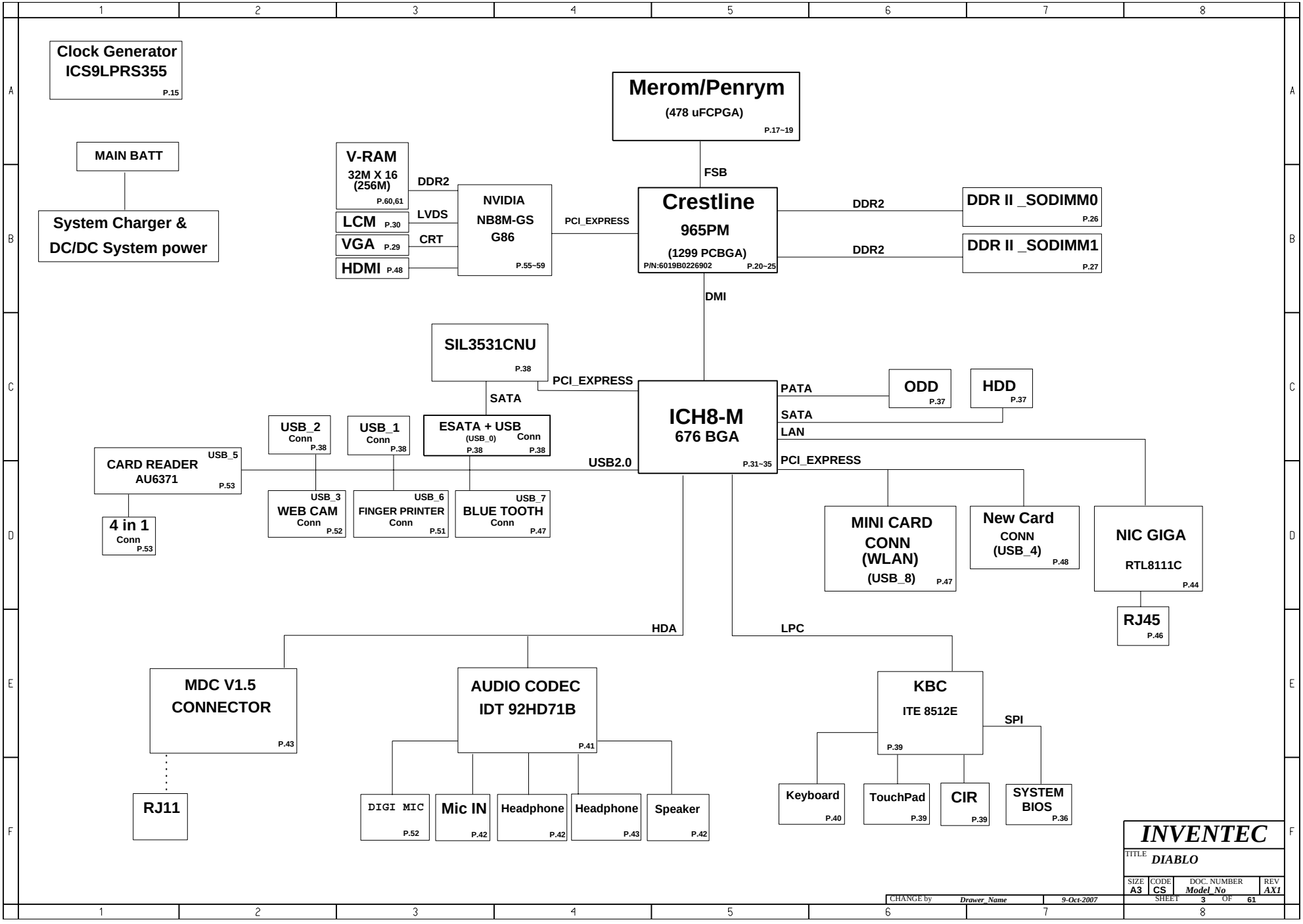
Clock Generator
ICS9LPRS355
P.15
Merom/Penrym
(478 uFCPGA)
P.17~19
MAIN BATT
System Charger &
DC/DC System power
V-RAM
32M X 16
(256M)
P.60,61
DDR2
LCM P.30
LVDS
VGA P.29
CRT
HDMI P.48
NVIDIA
NB8M-GS
G86
P.55~59
PCI_EXPRESS
FSB
Crestline
965PM
(1299 PCBGA)
P/N:6019B0226902
P.20~25
DDR2
DDR2
DDR II _SODIMM0
P.26
DDR II _SODIMM1
P.27
DMI
SIL3531CNU
P.38
PCI_EXPRESS
SATA
ICH8-M
676 BGA
P.31~35
PATA
SATA
LAN
PCI_EXPRESS
ODD
P.37
HDD
P.37
USB_2
Conn
P.38
USB_1
Conn
P.38
ESATA + USB
(USB_0)
Conn
P.38
P.38
CARD READER
AU6371
USB_5
P.53
USB2.0
4 in 1
Conn
P.53
USB_3
WEB CAM
Conn
P.52
USB_6
FINGER PRINTER
Conn
P.51
USB_7
BLUE TOOTH
Conn
P.47
MINI CARD
CONN
(WLAN)
(USB_8)
P.47
New Card
CONN
(USB_4)
P.48
NIC GIGA
RTL8111C
P.44
RJ45
P.46
HDA
LPC
MDC V1.5
CONNECTOR
P.43
RJ11
AUDIO CODEC
IDT 92HD71B
P.41
DIGI MIC
P.52
Mic IN
P.42
Headphone
P.42
Headphone
P.43
Speaker
P.42
KBC
ITE 8512E
P.39
SPI
Keyboard
P.40
TouchPad
P.39
CIR
P.39
SYSTEM
BIOS
P.36
INVENTEC
TITLE DIABLO
SIZE A3
CODE CS
DOC. NUMBER Model_No
REV AX1
SHEET 3 OF 61
CHANGE by Drawer_Name
9-Oct-2007

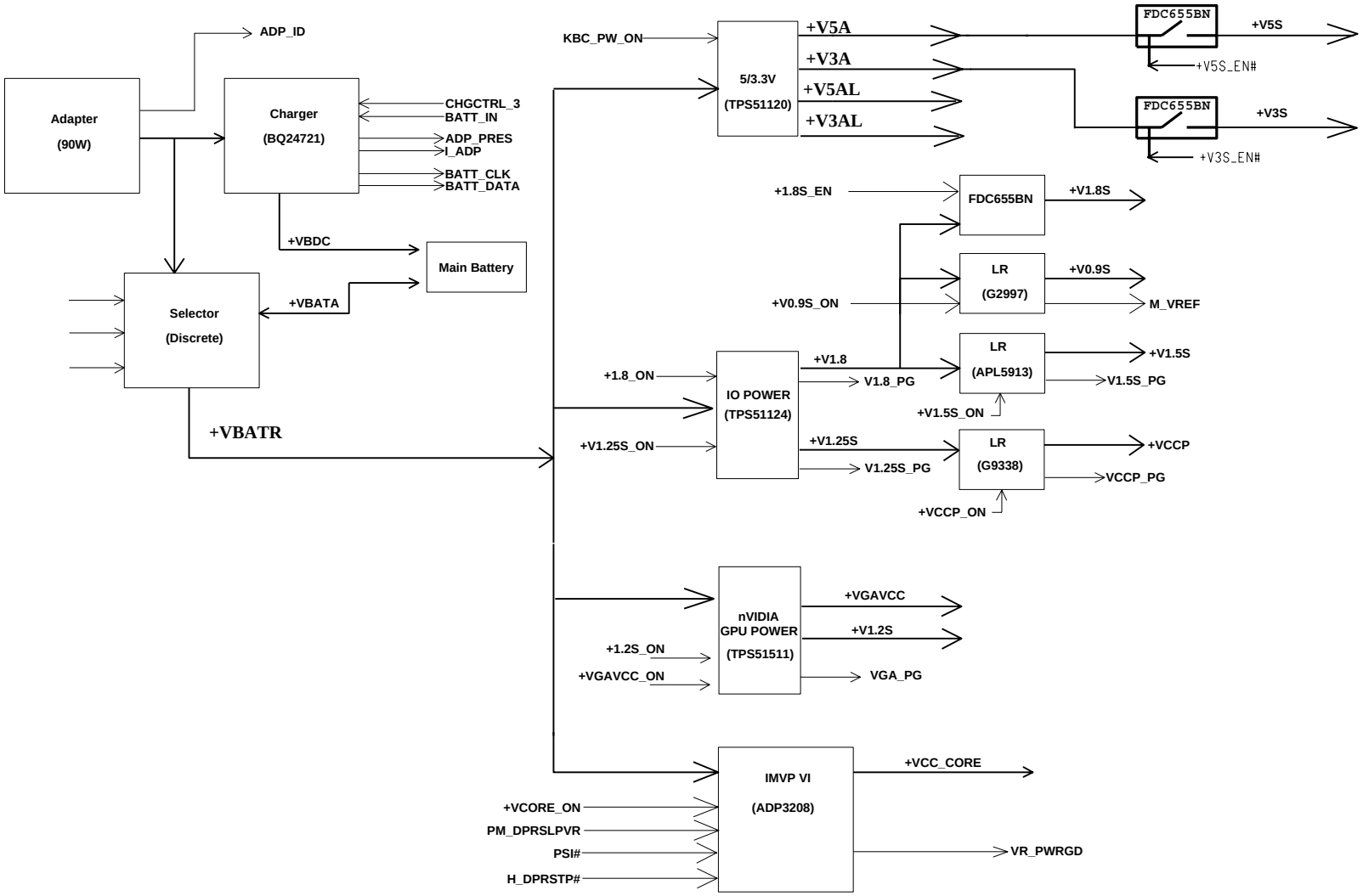

INVENTEC			
TITLE DIABLO			
SIZE A3	CODE CS	DOC. NUMBER Model_No	REV AX1
CHANGE by Drawer_Name	9-Oct-2007	SHEET 4 OF 61	

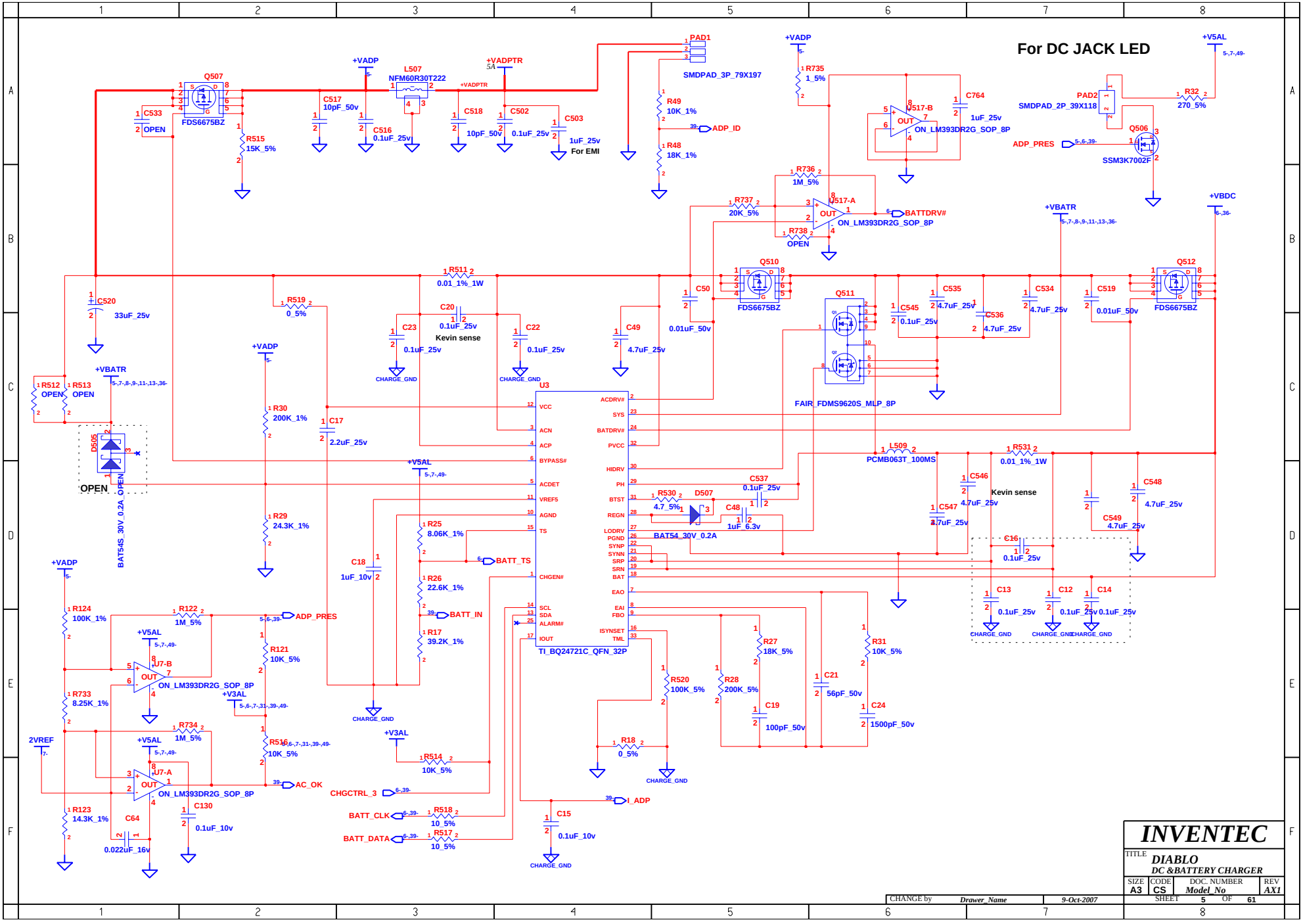
For DC JACK LED
Kevin sense
Kevin sense
U3
TI_BQ24721C_QFN_32P
Q507
FDS6675BZ
L507
NFM60R30T222
PAD1
SMDPAD_3P_79X197
PAD2
SMDPAD_2P_39X118
Q506
SSM3K7002F
U517-B
U517-A
U7-B
U7-A
ON_LM393DR2G_SOP_8P
Q510
Q511
Q512
FAIR_FDMS9620S_MLP_8P
L509
PCMB063T_100MS
D505
BAT54S_30V_0.2A
D507
BAT54_30V_0.2A
+VADP
+VADPTR
+V5AL
+VBATR
+VBDC
+V3AL
2VREF
ADP_ID
ADP_PRES
BATTDRV#
BATT_TS
BATT_IN
AC_OK
CHGCTRL_3
BATT_CLK
BATT_DATA
I_ADP
CHARGE_GND
For EMI
OPEN
INVENTEC
TITLE DIABLO
DC &BATTERY CHARGER
SIZE A3
CODE CS
DOC. NUMBER Model_No
REV AX1
SHEET 5 OF 61
CHANGE by Drawer_Name
9-Oct-2007

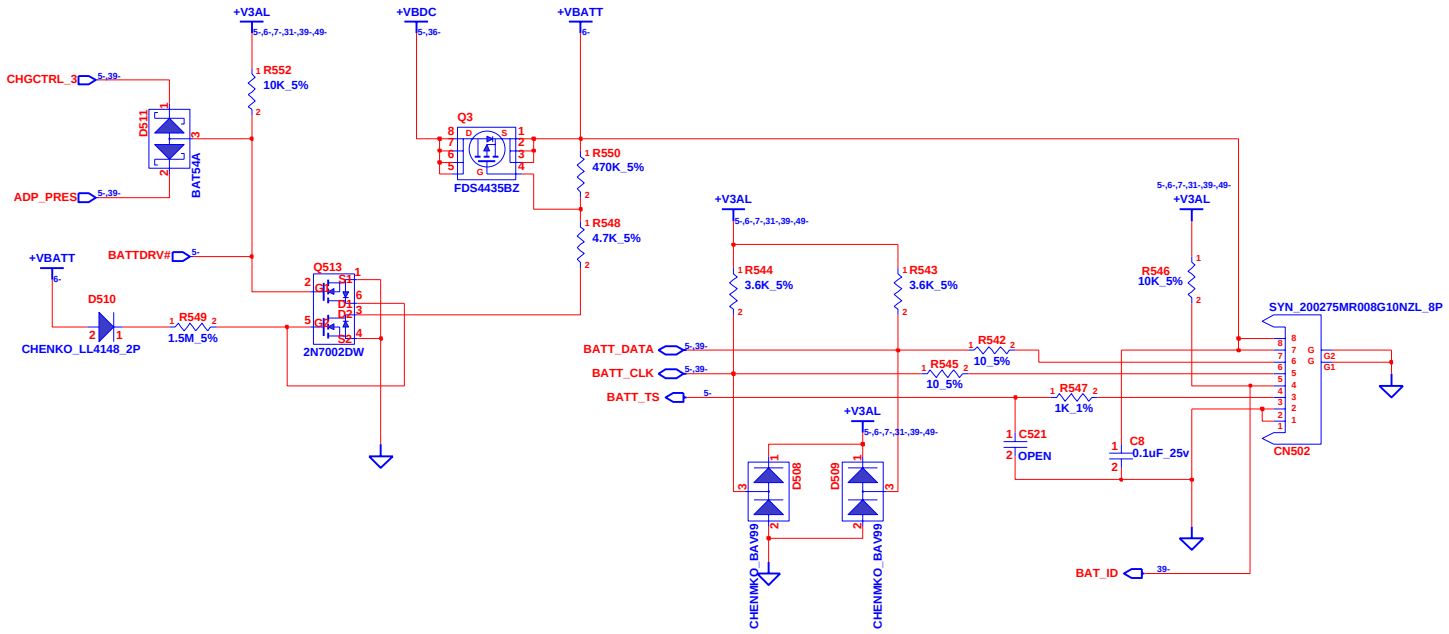

INVENTEC

TITLE **DIABLO**
BATTERY CONN

SIZE	CODE	DOC. NUMBER	REV
A3	CS	Model_No	AX1

SHEET 6 OF 61

CHANGE by	Drawer_Name	9-Oct-2007

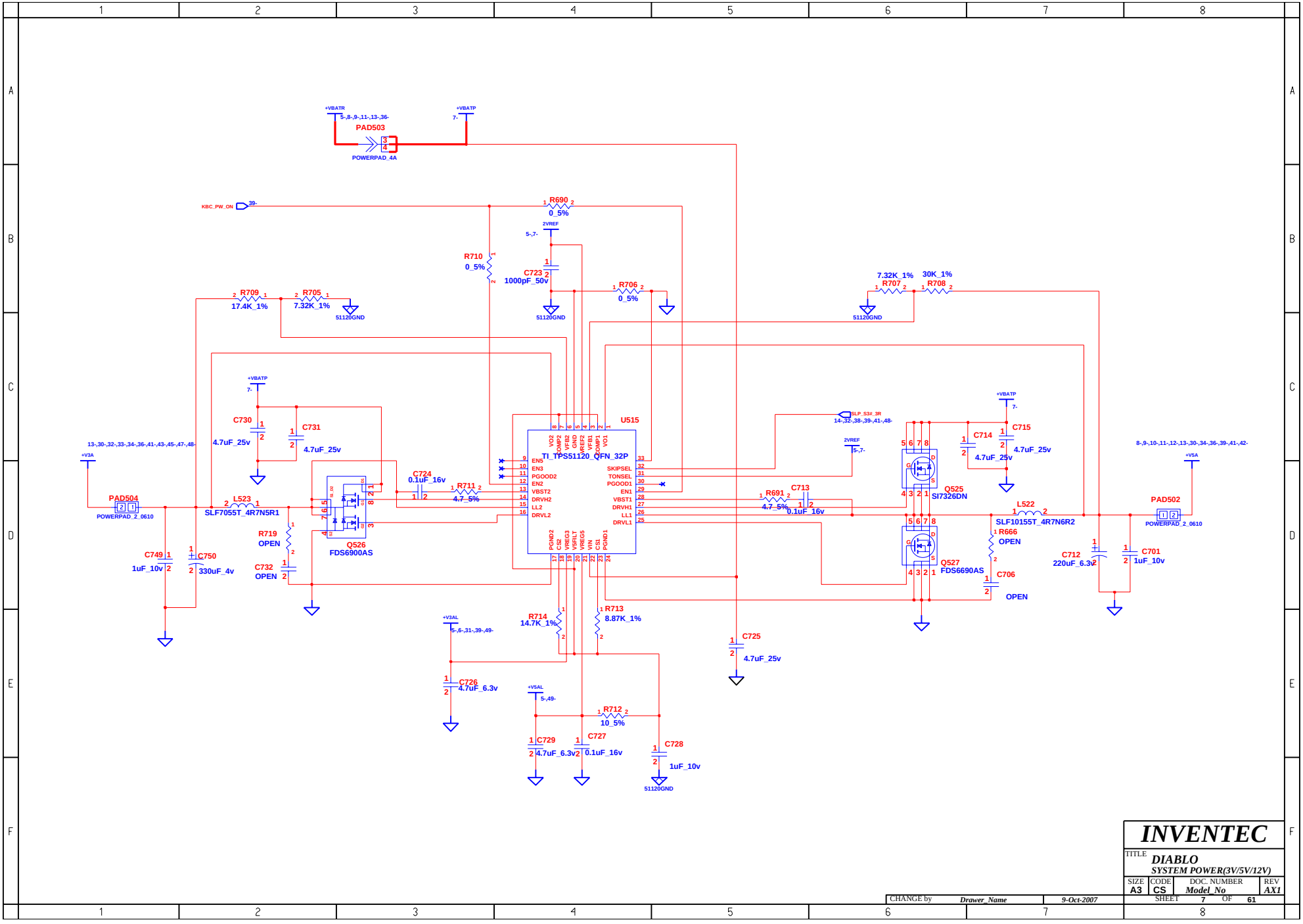

INVENTEC

TITLE DIABLO
SYSTEM POWER(3V/5V/12V)

SIZE	CODE	DOC. NUMBER	REV
A3	CS	Model_No	AX1

CHANGE by Drawer_Name 9-Oct-2007 SHEET 7 OF 61

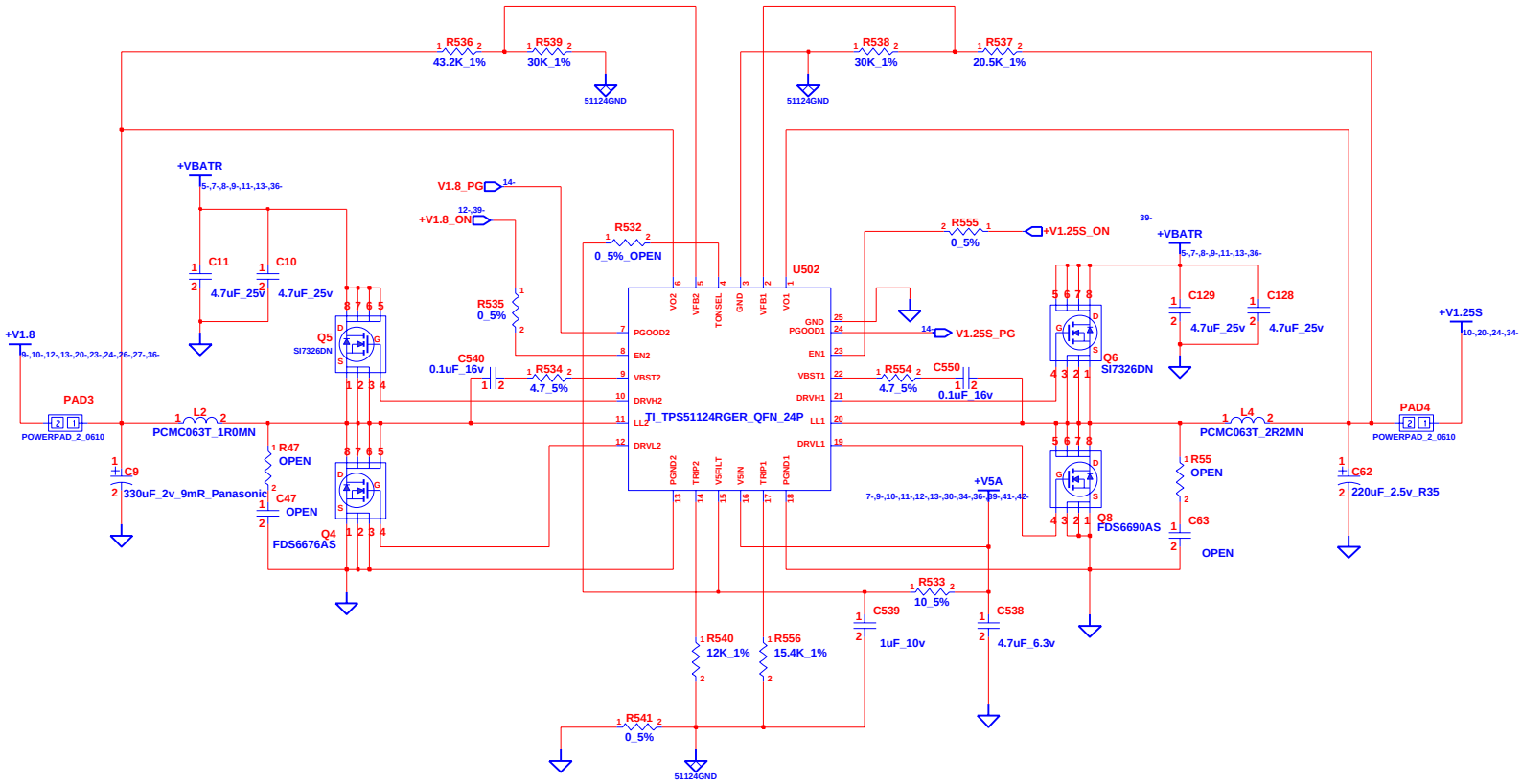

INVENTEC

TITLE
DIABLO
SYSTEM POWER(+V1.8/+V1.25S)

SIZE	CODE	DOC. NUMBER	REV
A3	CS	Model_No	AX1

CHANGE by Drawer_Name 9-Oct-2007

SHEET 8 OF 61

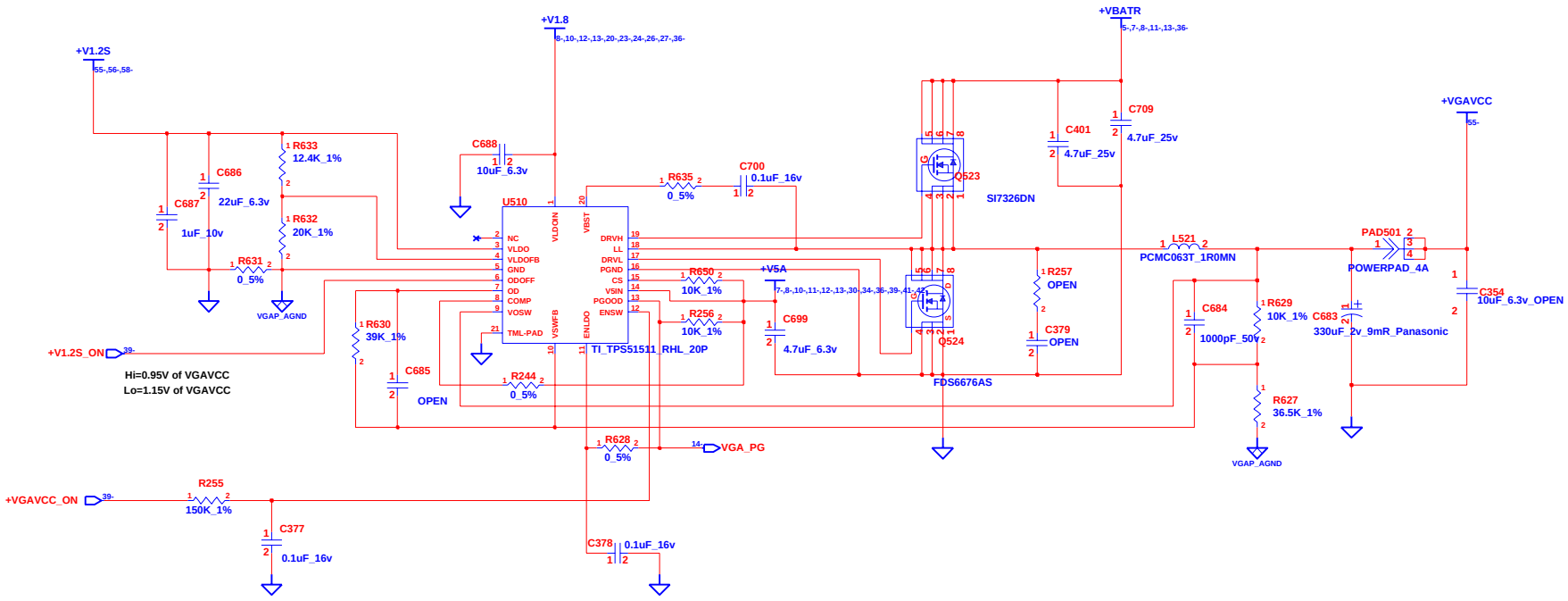

INVENTEC

TITLE
DIABLO
GRAPHIC POWER (+VGFX_CORE)

SIZE	CODE	DOC. NUMBER	REV
A3	CS	Model_No	AX1

CHANGE by Drawer_Name 9-Oct-2007

SHEET 9 OF 61

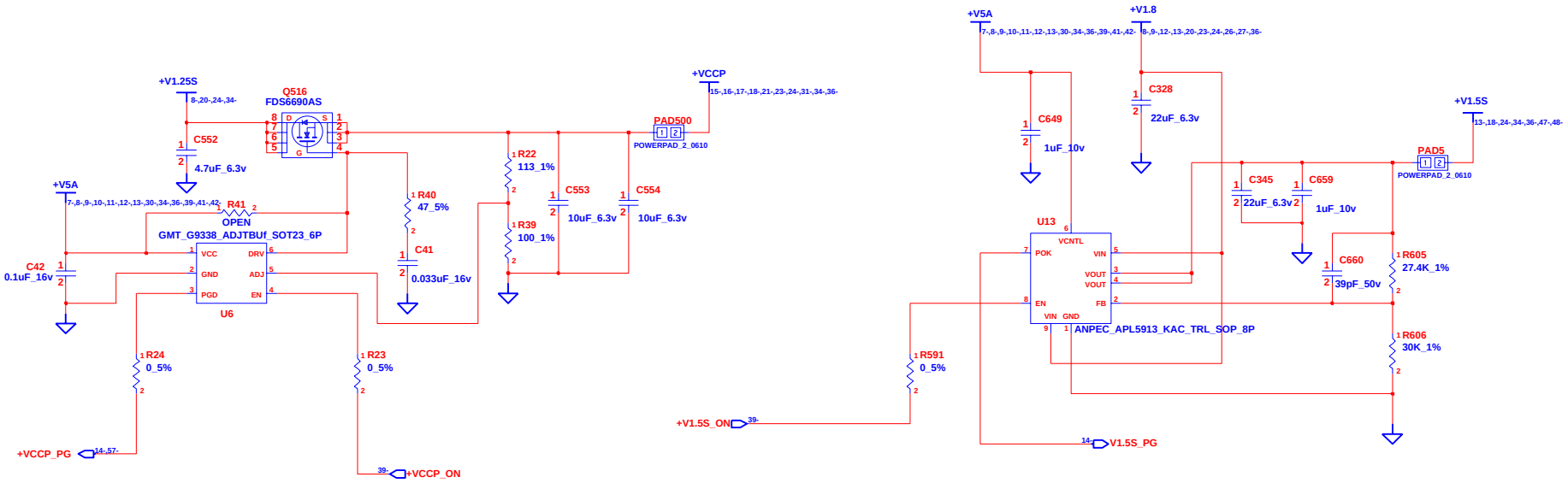

	R579	R576	R578	R577
G9338	0 ohm	OPEN	OPEN	0 ohm
SC339	OPEN	0 ohm	0 ohm	OPEN

CHANGE by	Drawer_Name	9-Oct-2007	

INVENTEC

TITLE **DIABLO**
SYSTEM POWER(+VCCP/+V1.5S)

SIZE	CODE	DOC. NUMBER	REV
A3	CS	Model_No	AX1

SHEET 10 OF 61

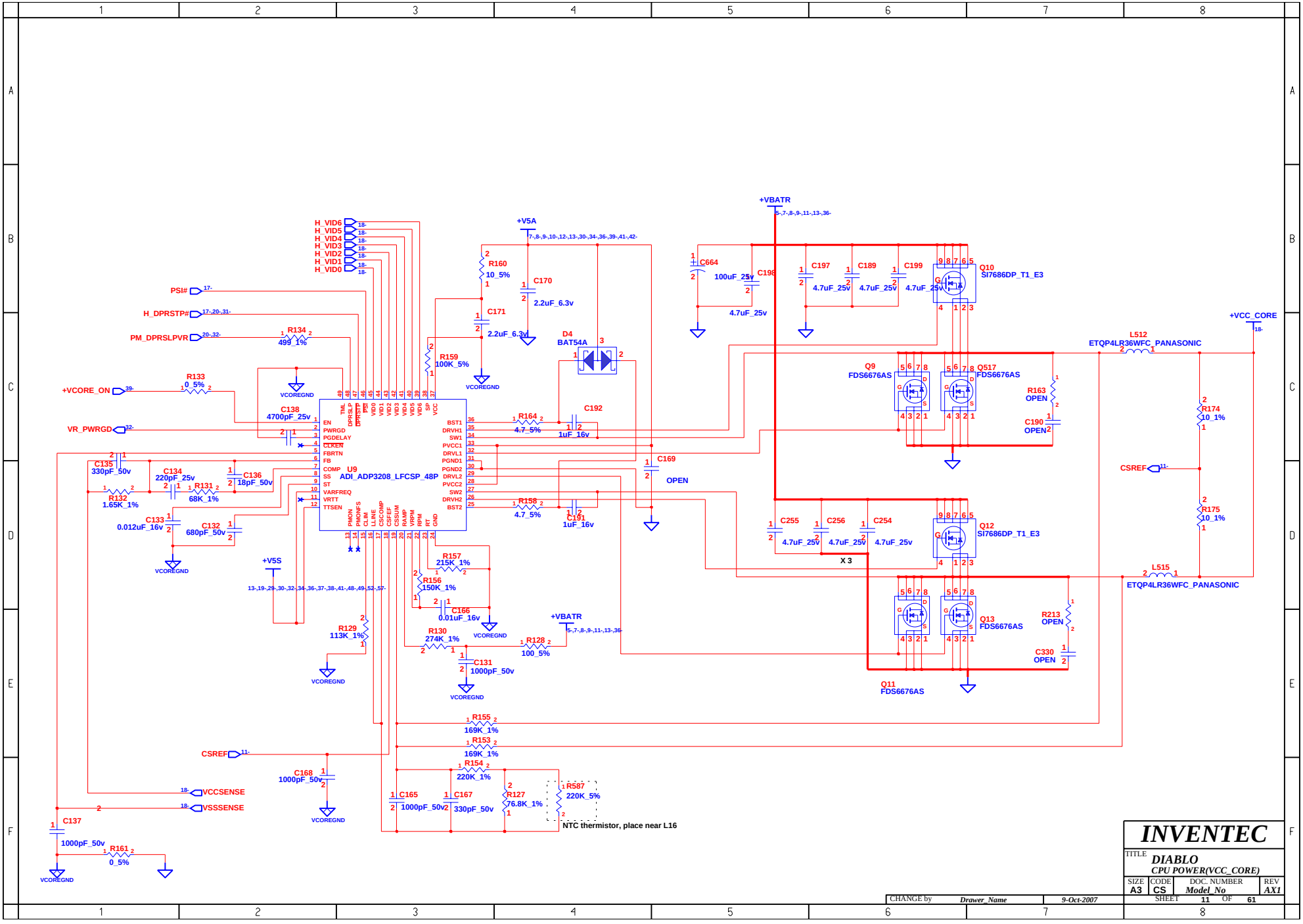

INVENTEC

TITLE DIABLO
CPU POWER(VCC_CORE)

SIZE	CODE	DOC. NUMBER	REV
A3	CS	Model_No	AX1

SHEET 11 OF 61

CHANGE by Drawer_Name 9-Oct-2007

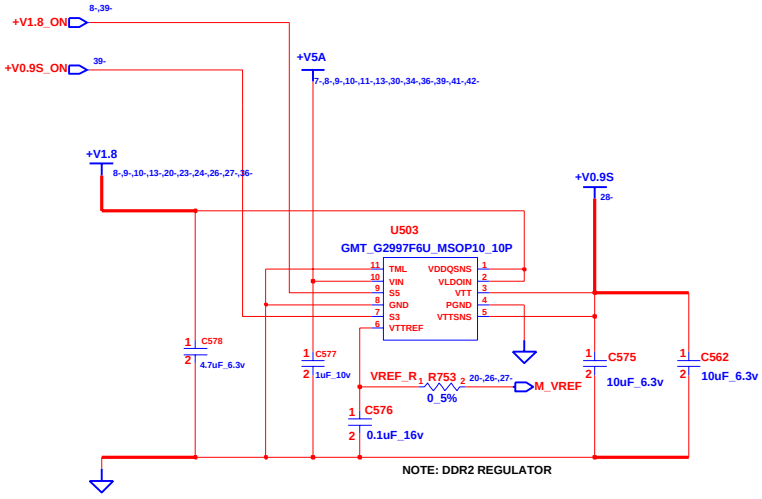

NOTE: DDR2 REGULATOR

INVENTEC

TITLE
DIABLO
DDR TERMINATION VOLTAGE

SIZE	CODE	DOC. NUMBER	REV
A3	CS	Model_No	AX1

SHEET 12 OF 61

CHANGE by	Drawer_Name	9-Oct-2007

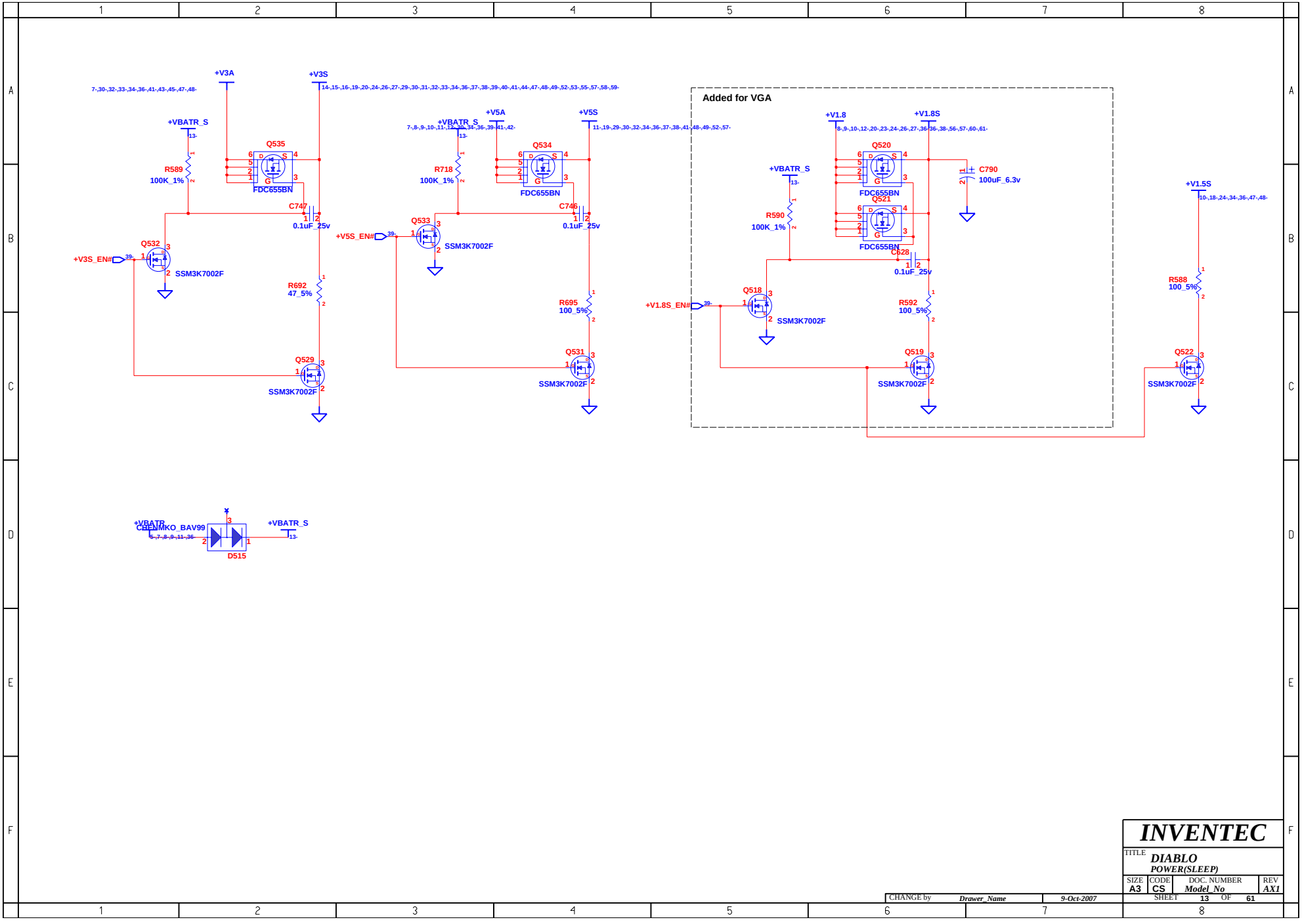

CHANGE by	Drawer_Name	9-Oct-2007	

INVENTEC

TITLE **DIABLO**
POWER(SLEEP)

SIZE	CODE	DOC. NUMBER	REV
A3	CS	Model_No	AX1

SHEET 13 OF 61

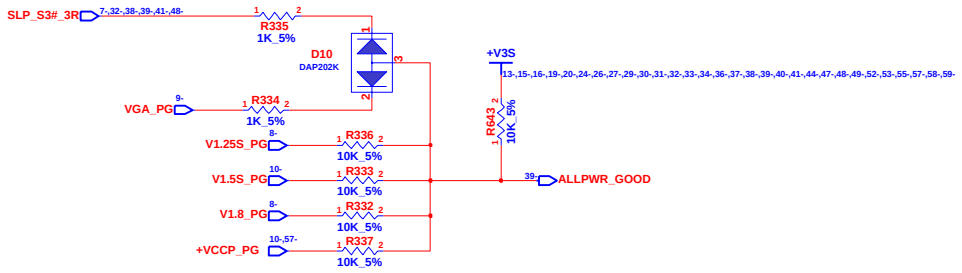

CHANGE by	Drawer_Name	9-Oct-2007	

INVENTEC

TITLE **DIABLO**
POWER(SEQUENCE)

SIZE	CODE	DOC. NUMBER	REV
A3	CS	Model_No	AX1

SHEET 14 OF 61

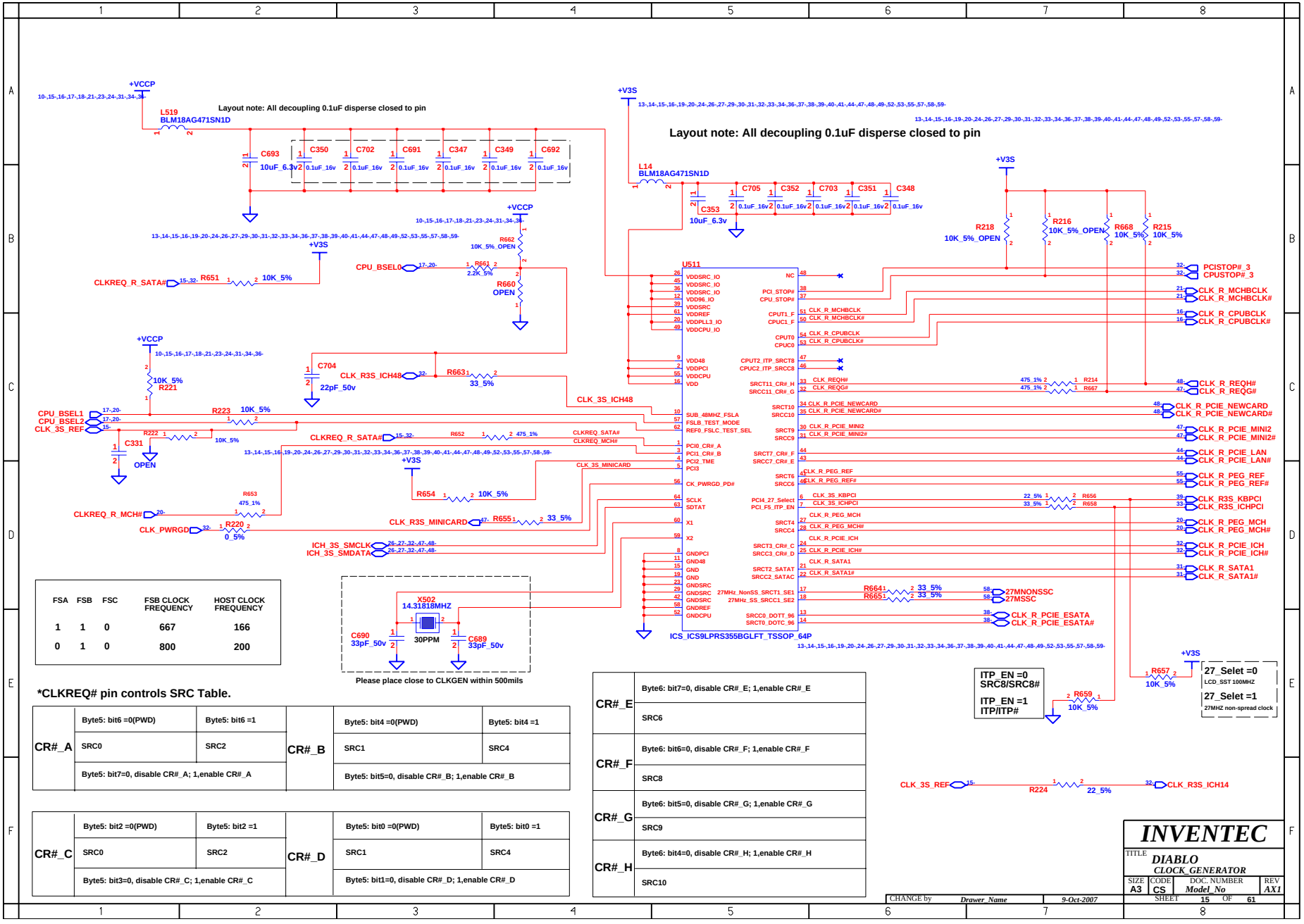

FSA	FSB	FSC	FSB CLOCK FREQUENCY	HOST CLOCK FREQUENCY
1	1	0	667	166
0	1	0	800	200

***CLKREQ# pin controls SRC Table.**

CR#_A	Byte5: bit6 =0(PWD)	Byte5: bit6 =1	CR#_B	Byte5: bit4 =0(PWD)	Byte5: bit4 =1
	SRC0	SRC2		SRC1	SRC4
	Byte5: bit7=0, disable CR#_A; 1,enable CR#_A			Byte5: bit5=0, disable CR#_B; 1,enable CR#_B	

CR#_C	Byte5: bit2 =0(PWD)	Byte5: bit2 =1	CR#_D	Byte5: bit0 =0(PWD)	Byte5: bit0 =1
	SRC0	SRC2		SRC1	SRC4
	Byte5: bit3=0, disable CR#_C; 1,enable CR#_C			Byte5: bit1=0, disable CR#_D; 1,enable CR#_D	

CR#_E	Byte6: bit7=0, disable CR#_E; 1,enable CR#_E
	SRC6
CR#_F	Byte6: bit6=0, disable CR#_F; 1,enable CR#_F
	SRC8
CR#_G	Byte6: bit5=0, disable CR#_G; 1,enable CR#_G
	SRC9
CR#_H	Byte6: bit4=0, disable CR#_H; 1,enable CR#_H
	SRC10

CHANGE by	Drawer_Name	9-Oct-2007	

INVENTEC

TITLE: DIABLO CLOCK_GENERATOR

SIZE	CODE	DOC. NUMBER	REV
A3	CS	Model_No	AX1

SHEET 15 OF 61

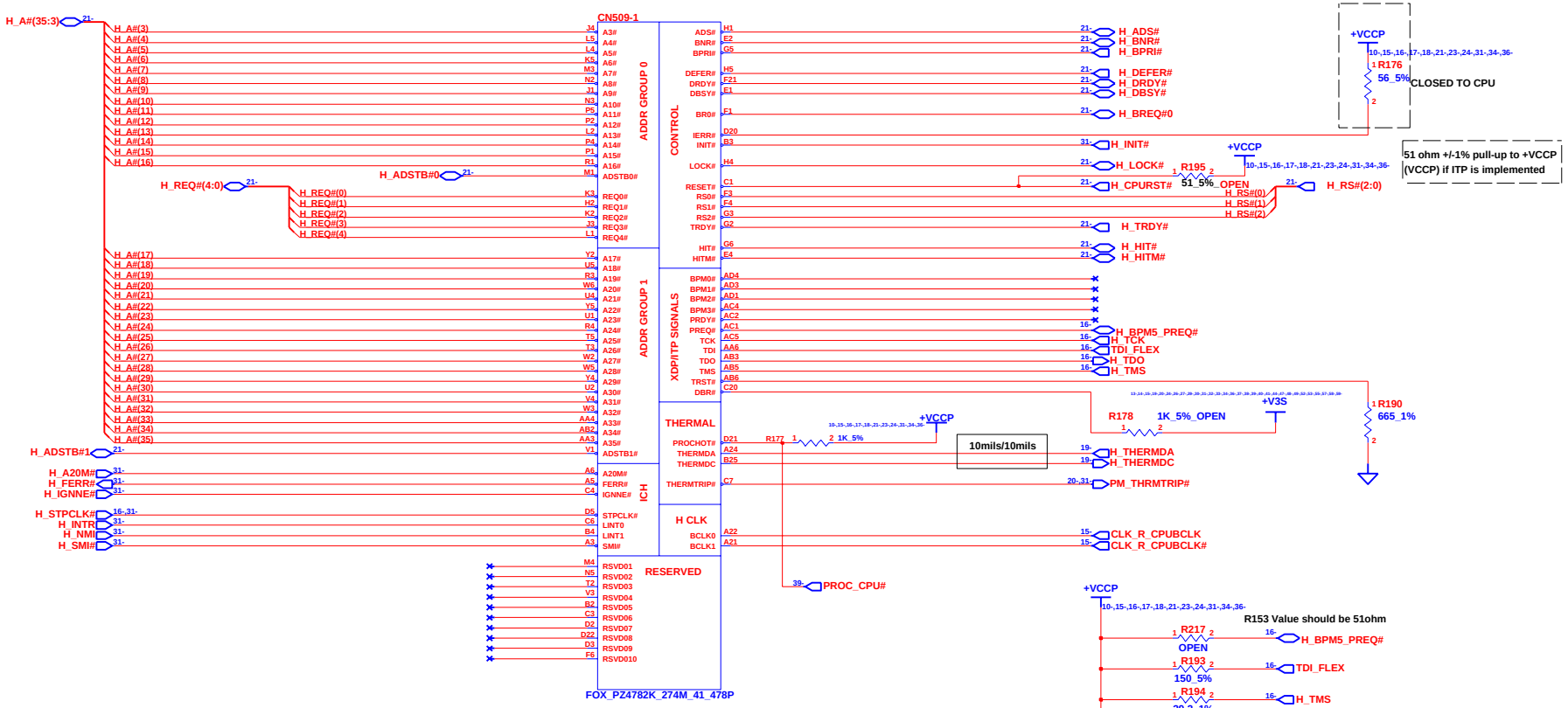

INVENTEC

TITLE DIABLO
MEROM-1

SIZE	CODE	DOC. NUMBER	REV
A3	CS	Model_No	AX1

CHANGE by Drawer_Name 9-Oct-2007 SHEET 16 OF 61

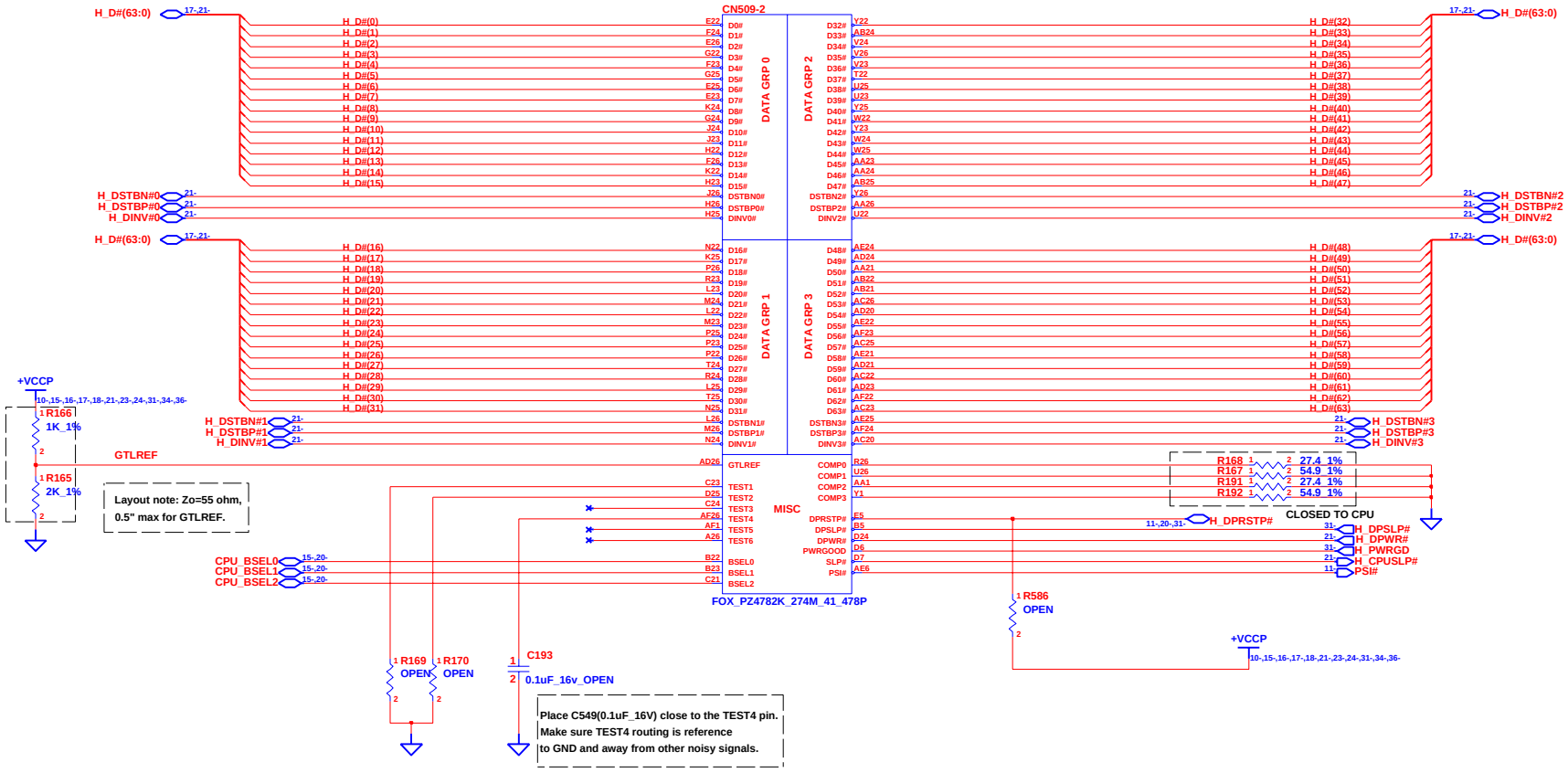

CHANGE by	Drawer_Name	9-Oct-2007	

INVENTEC

TITLE **DIABLO**
MEROM-2

SIZE	CODE	DOC. NUMBER	REV
A3	CS	Model_No	AX1

SHEET 17 OF 61

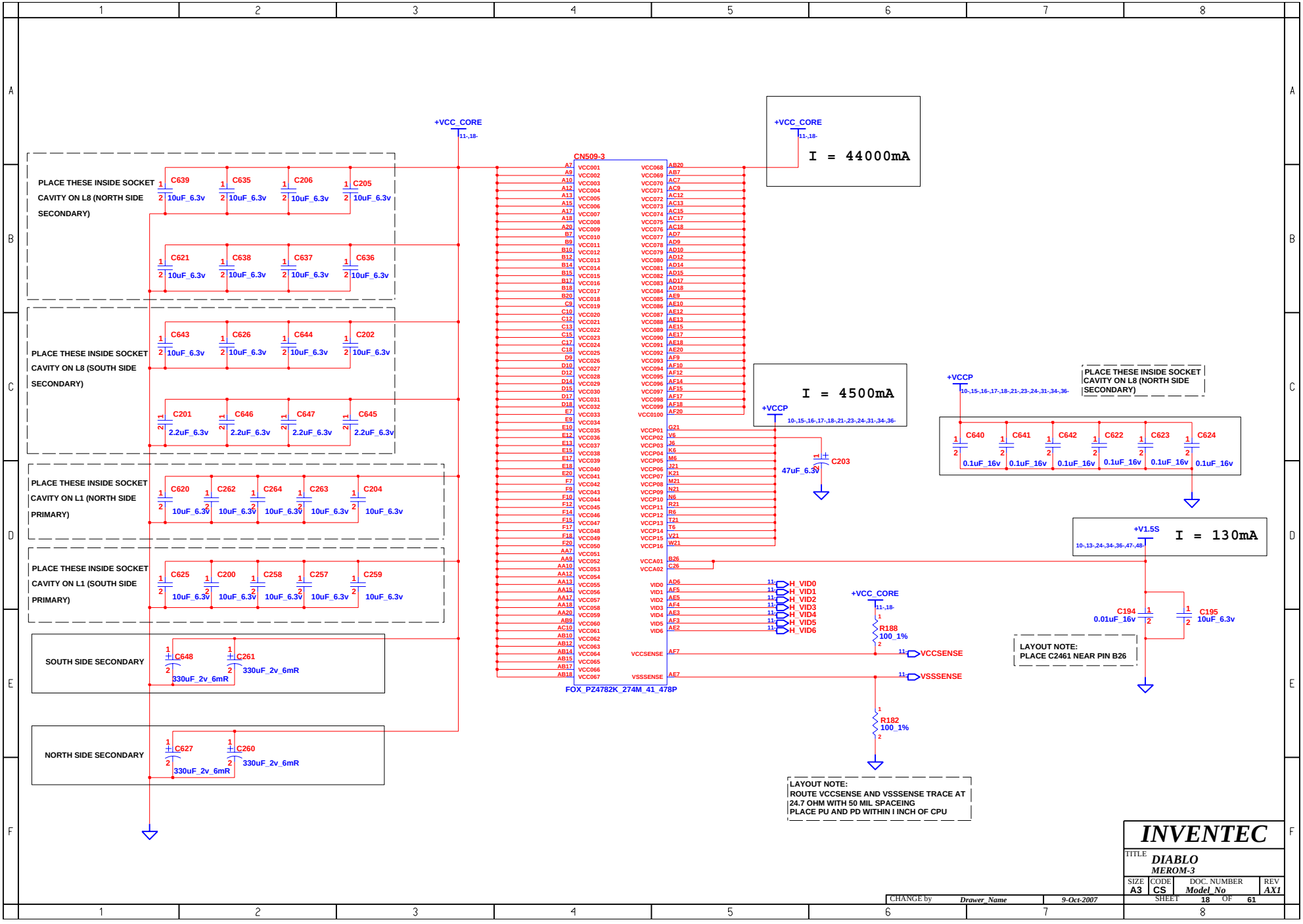
+VCC_CORE
11-,18-
CN509-3
FOX_PZ4782K_274M_41_478P
I = 44000mA
I = 4500mA
+VCCP
10-,15-,16-,17-,18-,21-,23-,24-,31-,34-,36-
47uF_6.3V
C203
PLACE THESE INSIDE SOCKET CAVITY ON L8 (NORTH SIDE SECONDARY)
C639 C635 C206 C205
C621 C638 C637 C636
10uF_6.3v
PLACE THESE INSIDE SOCKET CAVITY ON L8 (SOUTH SIDE SECONDARY)
C643 C626 C644 C202
C201 C646 C647 C645
2.2uF_6.3v
PLACE THESE INSIDE SOCKET CAVITY ON L1 (NORTH SIDE PRIMARY)
C620 C262 C264 C263 C204
PLACE THESE INSIDE SOCKET CAVITY ON L1 (SOUTH SIDE PRIMARY)
C625 C200 C258 C257 C259
SOUTH SIDE SECONDARY
C648 C261
330uF_2v_6mR
NORTH SIDE SECONDARY
C627 C260
H_VID0
H_VID1
H_VID2
H_VID3
H_VID4
H_VID5
H_VID6
R188
100_1%
VCCSENSE
VSSSENSE
R182
LAYOUT NOTE:
ROUTE VCCSENSE AND VSSSENSE TRACE AT 24.7 OHM WITH 50 MIL SPACEING
PLACE PU AND PD WITHIN I INCH OF CPU
C640 C641 C642 C622 C623 C624
0.1uF_16v
+V1.5S
10-,13-,24-,34-,36-,47-,48-
I = 130mA
C194
0.01uF_16v
C195
10uF_6.3v
LAYOUT NOTE:
PLACE C2461 NEAR PIN B26
INVENTEC
TITLE
DIABLO
MEROM-3
SIZE A3
CODE CS
DOC. NUMBER Model_No
REV AX1
SHEET 18 OF 61
CHANGE by Drawer_Name
9-Oct-2007

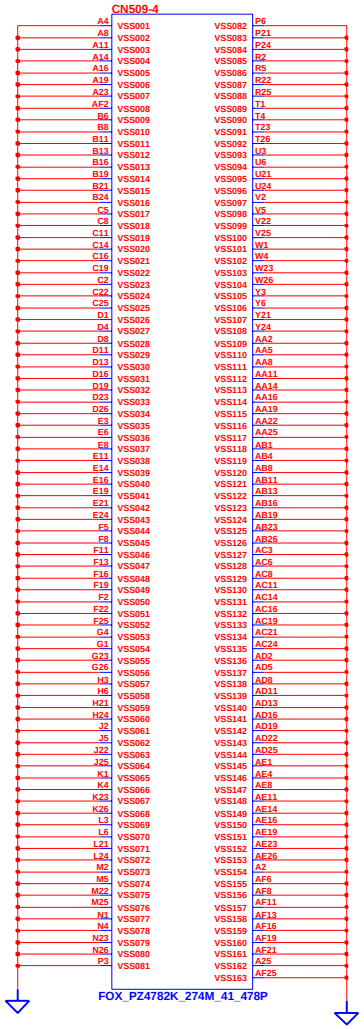

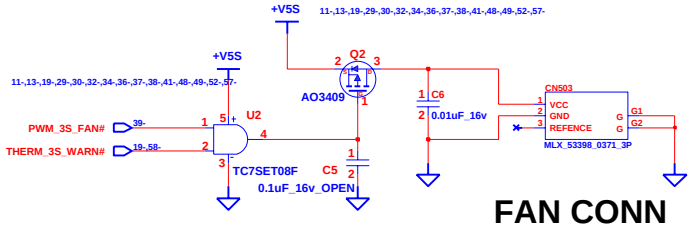

FAN CONN

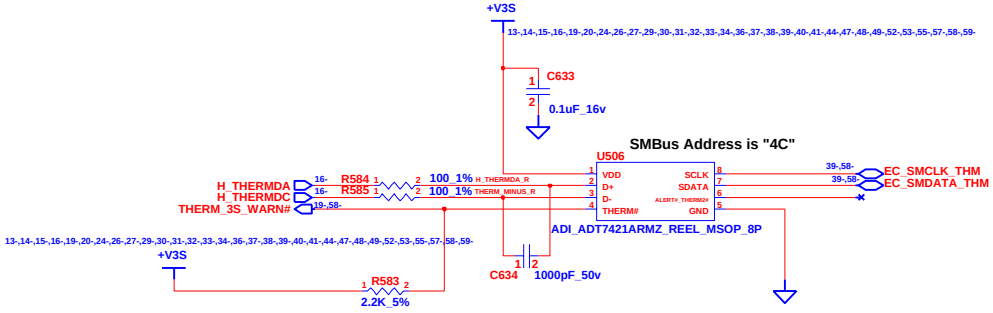

CHANGE by	Drawer_Name	9-Oct-2007	

INVENTEC

TITLE **DIABLO**
THERMAL&FAN

SIZE	CODE	DOC. NUMBER	REV
A3	CS	Model_No	AX1

SHEET 19 OF 61

MCH_CFG(5)	LOW=DMIx2 HIGH=DMIx4

MCH_CFG(7) (CPU Strap)	LOW=RSVD HIGH=Mobile CPU

MCH_CFG(9) PCIE Graphics Lane	LOW=Reverse Lane HIGH=Normal operation

NOTE : USE 4K-OHM RESISTOR WHEN INSTALLING PULL-UP/PULL-DOWN RESISTOR ON ANY MCH-CFG CONNECTION/PINS.

MCH_CFG(13:12) XOR/ALLZ	00=PARTIAL CLOCK GATING DISABLE 01=XOR MODE ENABLE 10=ALL-Z MODE ENABLE 11=NORMAL OPERATION

MCH_CFG(16) (FSB Dynamic ODT)	LOW=Dynamic ODT Disable HIGH=Dynamic ODT Enable

MCH_CFG(11) PSB 4X CLK ENABLE	LOW=CALISTOGA HIGH=RESERVED

NOTE: CFG[2:0] STRP : 001b : 533 MT/S
011b : 667 MT/S

Note: R1351,R1352
For Calero : 80.6 ohm
For Crestline : 20 ohm

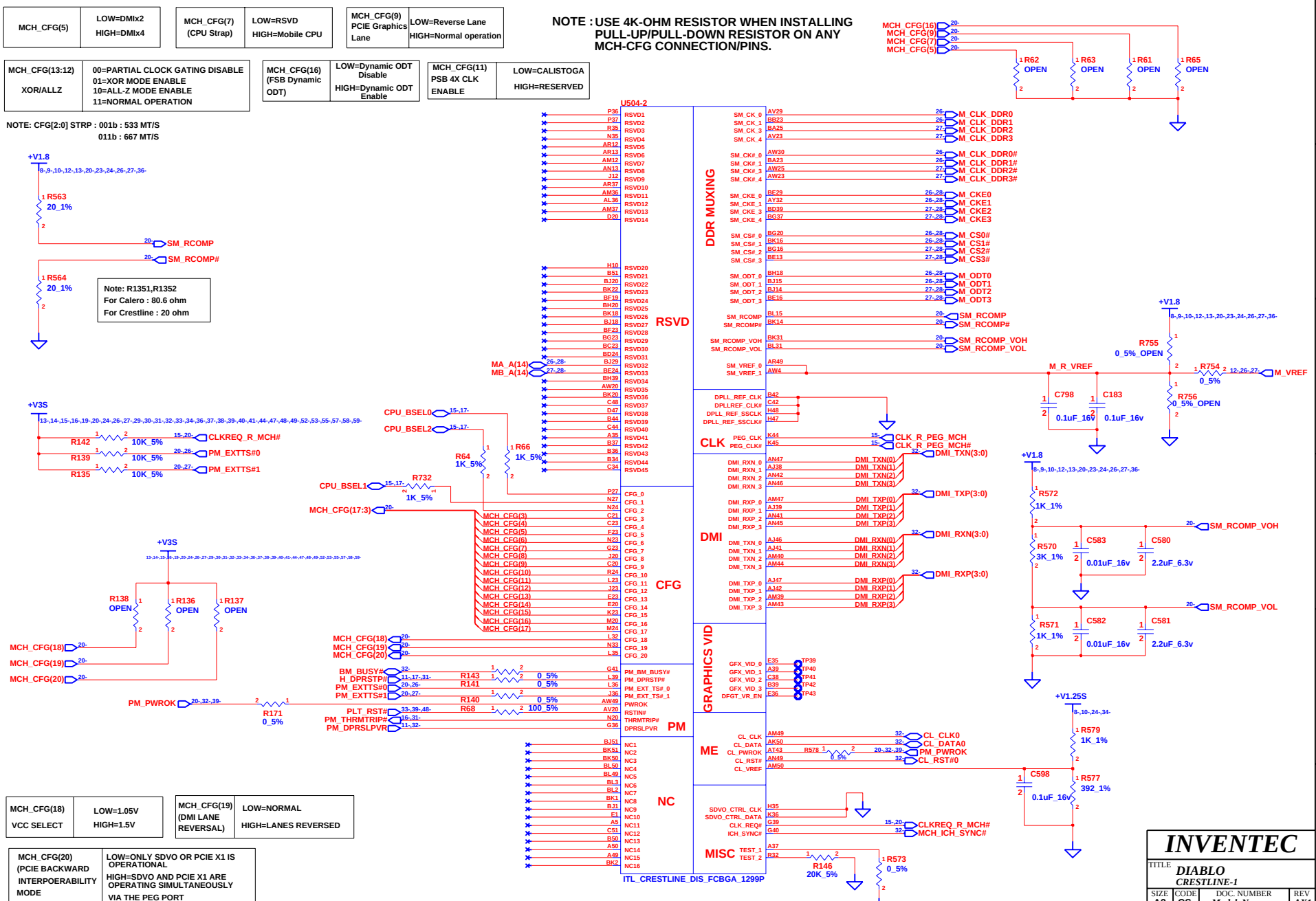

MCH_CFG(18) VCC SELECT	LOW=1.05V HIGH=1.5V

MCH_CFG(19) (DMI LANE REVERSAL)	LOW=NORMAL HIGH=LANES REVERSED

MCH_CFG(20) (PCIE BACKWARD INTERPOERABILITY MODE	LOW=ONLY SDVO OR PCIE X1 IS OPERATIONAL HIGH=SDVO AND PCIE X1 ARE OPERATING SIMULTANEOUSLY VIA THE PEG PORT

INVENTEC

TITLE: DIABLO
CRESTLINE-1

SIZE	CODE	DOC. NUMBER	REV
A3	CS	Model_No	AX1

SHEET 20 OF 61

CHANGE by Drawer_Name 9-Oct-2007

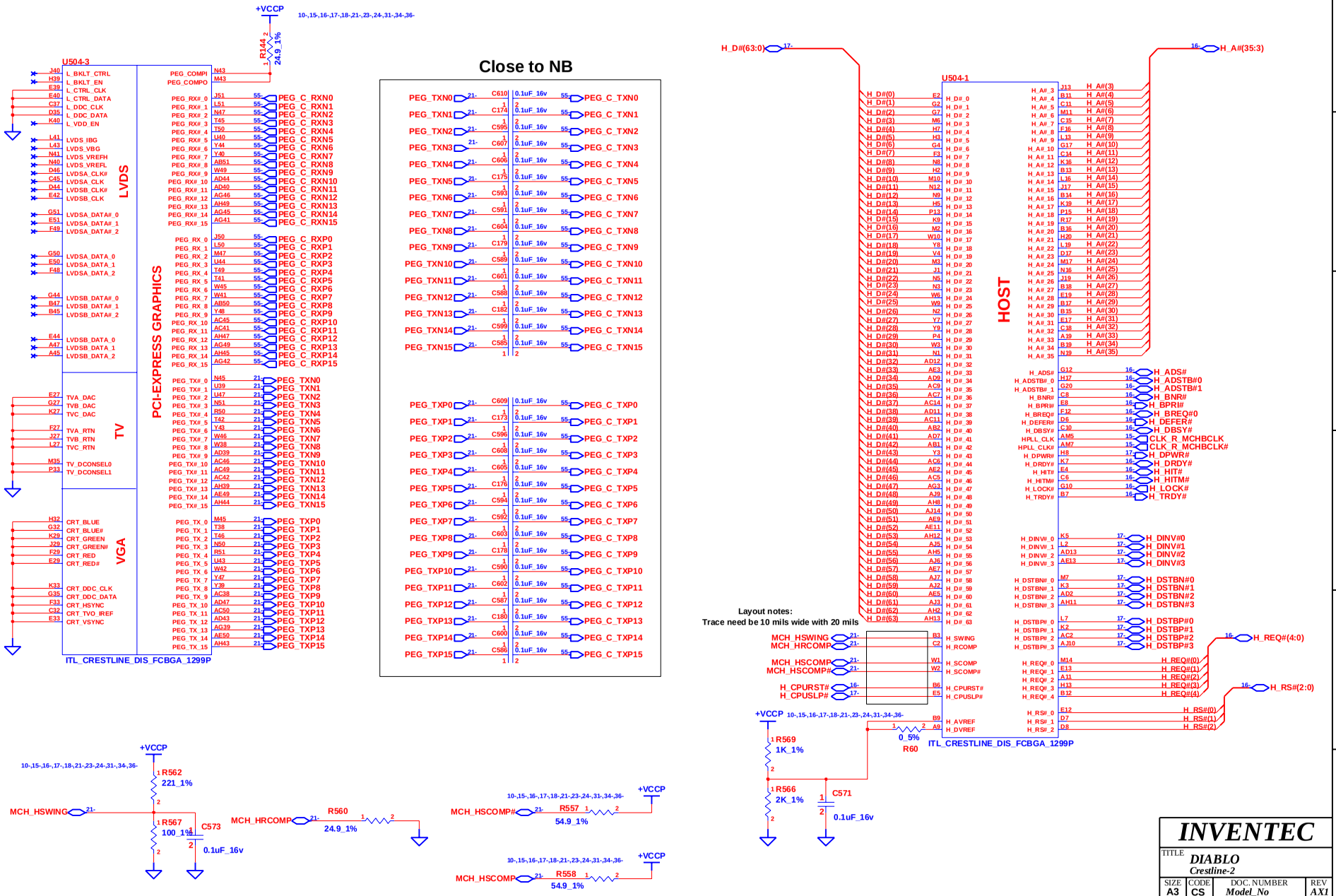

CHANGE by	Drawer_Name	9-Oct-2007

INVENTEC

TITLE: DIABLO
Crestline-2

SIZE	CODE	DOC. NUMBER	REV
A3	CS	Model_No	AX1

SHEET 21 OF 61

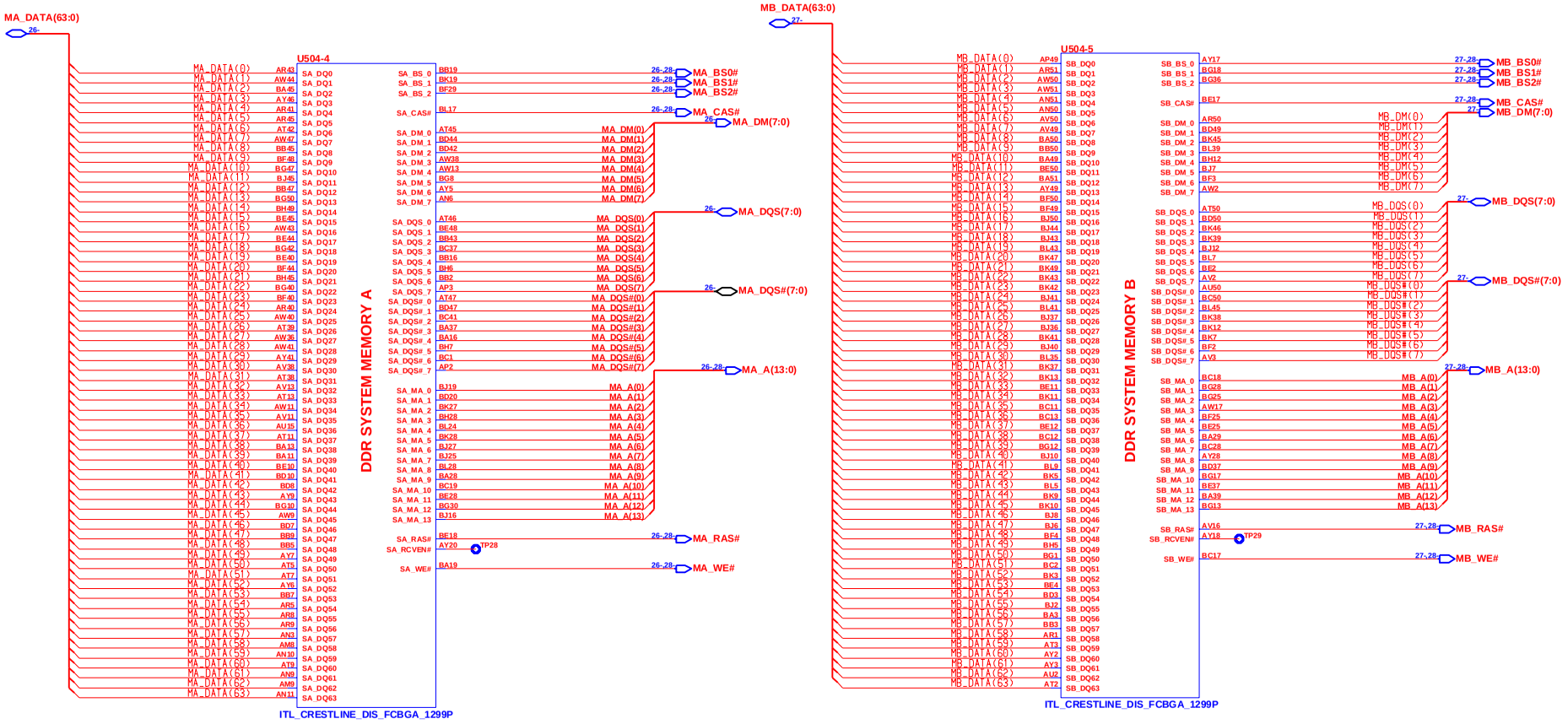

CHANGE by	Drawer_Name	9-Oct-2007	

INVENTEC

TITLE: *DIABLO*
CRESTLINE-3

SIZE	CODE	DOC. NUMBER	REV
A3	CS	Model_No	AX1

SHEET 22 OF 61

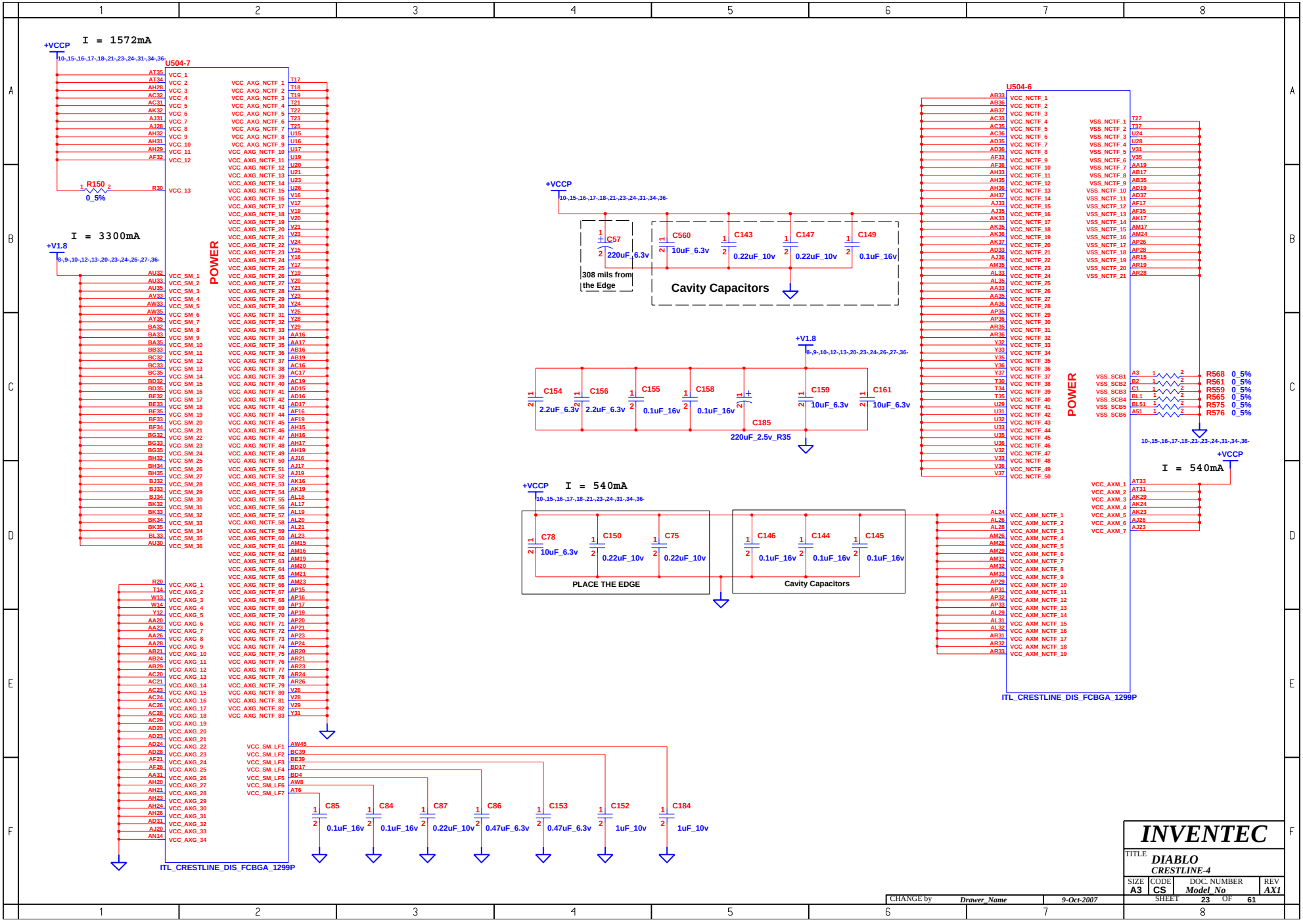
I = 1572mA
+VCCP
U504-7
R150
0_5%
I = 3300mA
+V1.8
POWER
ITL_CRESTLINE_DIS_FCBGA_1299P
C57
220uF_6.3v
308 mils from the Edge
C560
10uF_6.3v
C143
0.22uF_10v
C147
0.22uF_10v
C149
0.1uF_16v
Cavity Capacitors
C154
2.2uF_6.3v
C156
2.2uF_6.3v
C155
0.1uF_16v
C158
0.1uF_16v
C185
220uF_2.5v_R35
C159
10uF_6.3v
C161
10uF_6.3v
I = 540mA
C78
10uF_6.3v
C150
0.22uF_10v
C75
0.22uF_10v
PLACE THE EDGE
C146
0.1uF_16v
C144
0.1uF_16v
C145
0.1uF_16v
Cavity Capacitors
U504-6
ITL_CRESTLINE_DIS_FCBGA_1299P
R568 0_5%
R561 0_5%
R559 0_5%
R565 0_5%
R575 0_5%
R576 0_5%
I = 540mA
C85
0.1uF_16v
C84
0.1uF_16v
C87
0.22uF_10v
C86
0.47uF_6.3v
C153
0.47uF_6.3v
C152
1uF_10v
C184
1uF_10v
INVENTEC
TITLE
DIABLO
CRESTLINE-4
SIZE A3
CODE CS
DOC. NUMBER Model_No
REV AX1
SHEET 23 OF 61
CHANGE by Drawer_Name
9-Oct-2007

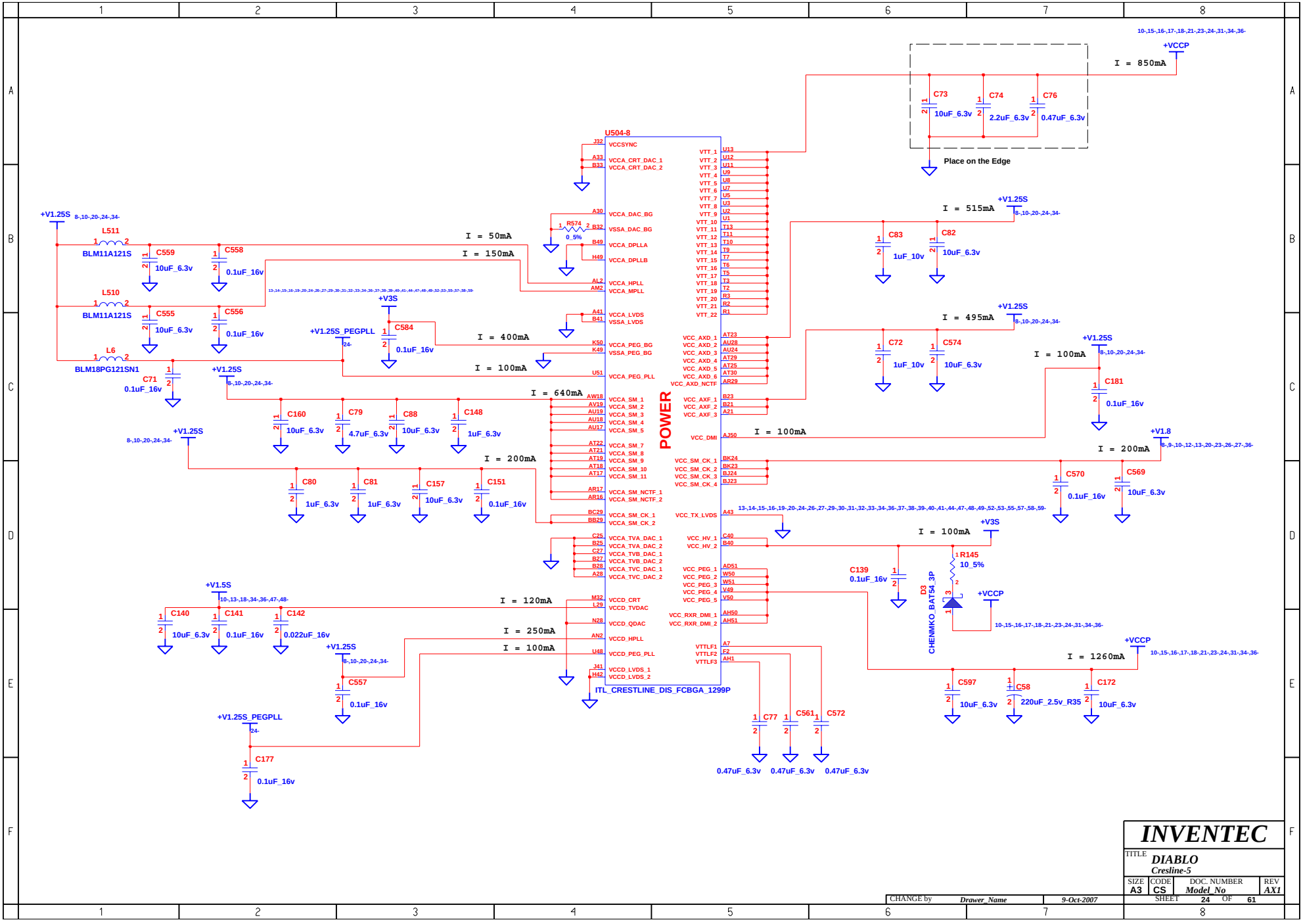

CHANGE by	Drawer_Name	9-Oct-2007	

INVENTEC

TITLE **DIABLO**
Cresline-5

SIZE	CODE	DOC. NUMBER	REV
A3	CS	Model_No	AX1

SHEET 24 OF 61

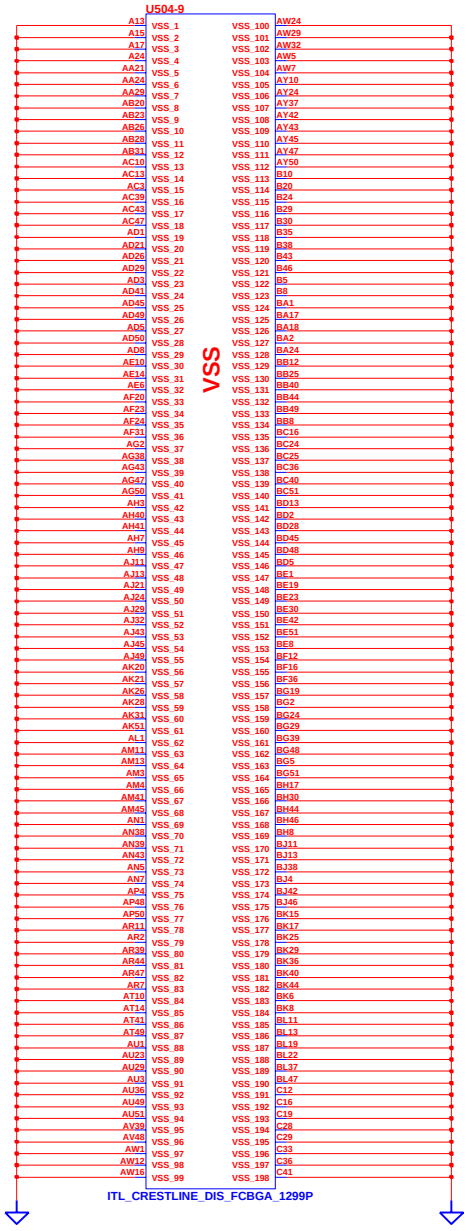

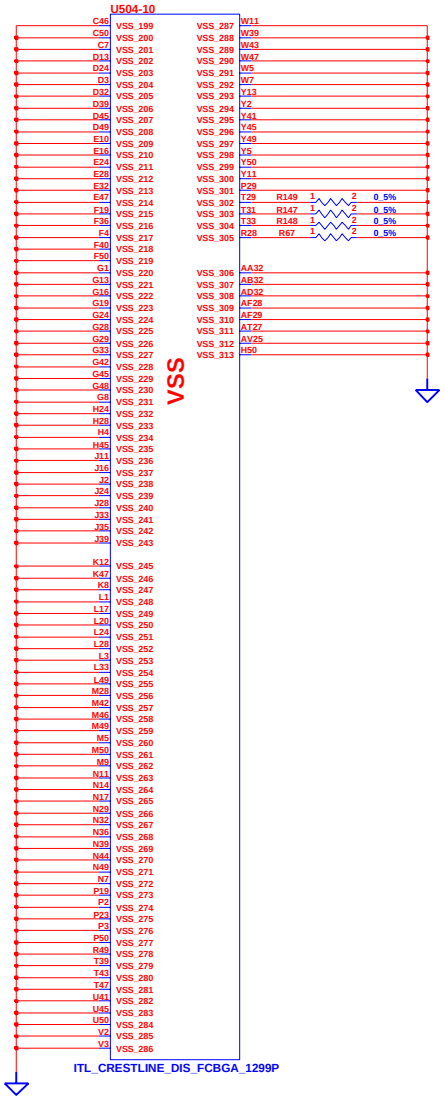

CHANGE by	Drawer_Name	9-Oct-2007	

INVENTEC

TITLE **DIABLO**
CRESTLINE-6

SIZE	CODE	DOC. NUMBER	REV
A3	CS	Model_No	AX1

SHEET 25 OF 61

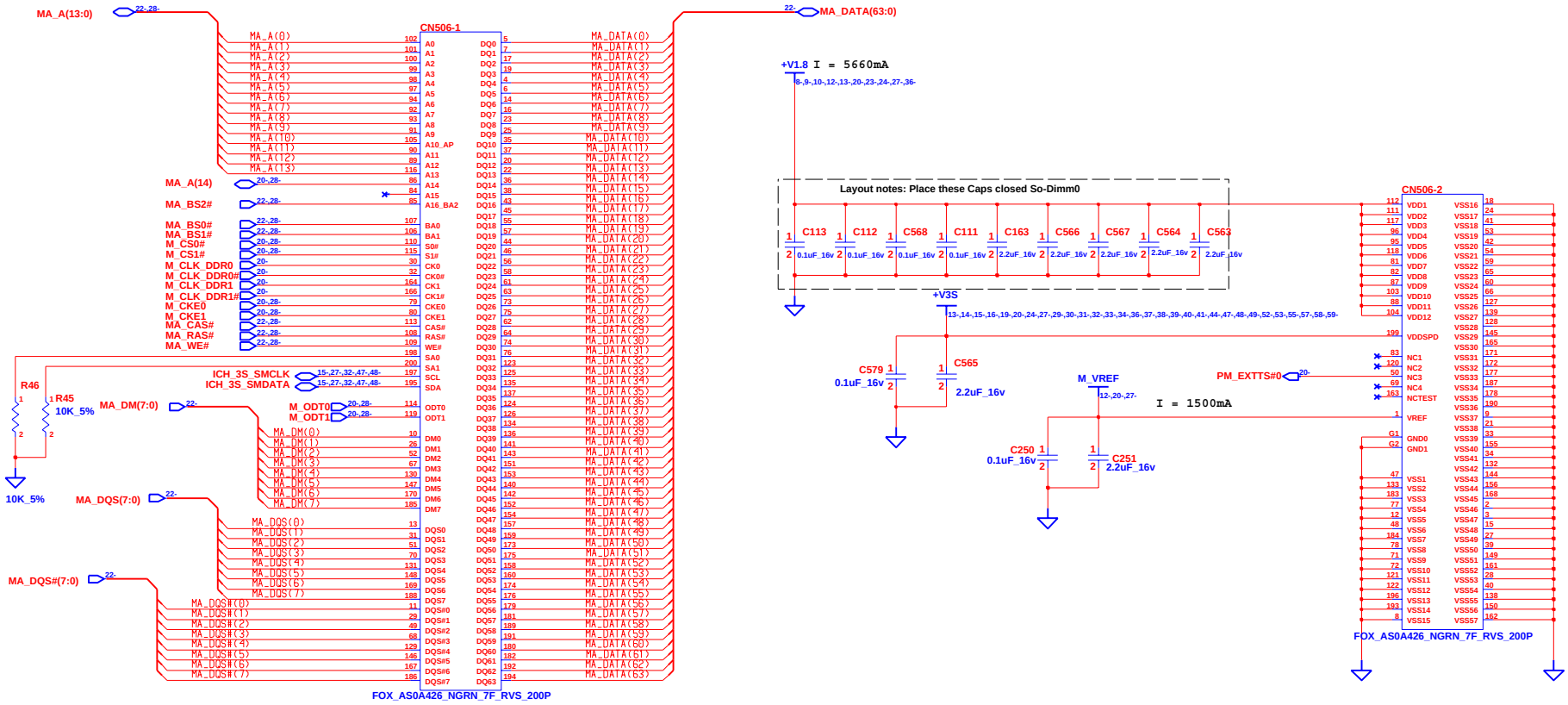

SO DIMM0_11mm

INVENTEC			
TITLE DIABLO DDR2-DIMM-0			
SIZE A3	CODE CS	DOC. NUMBER Model_No	REV AX1
CHANGE by Drawer_Name	9-Oct-2007	SHEET 26 OF 61	

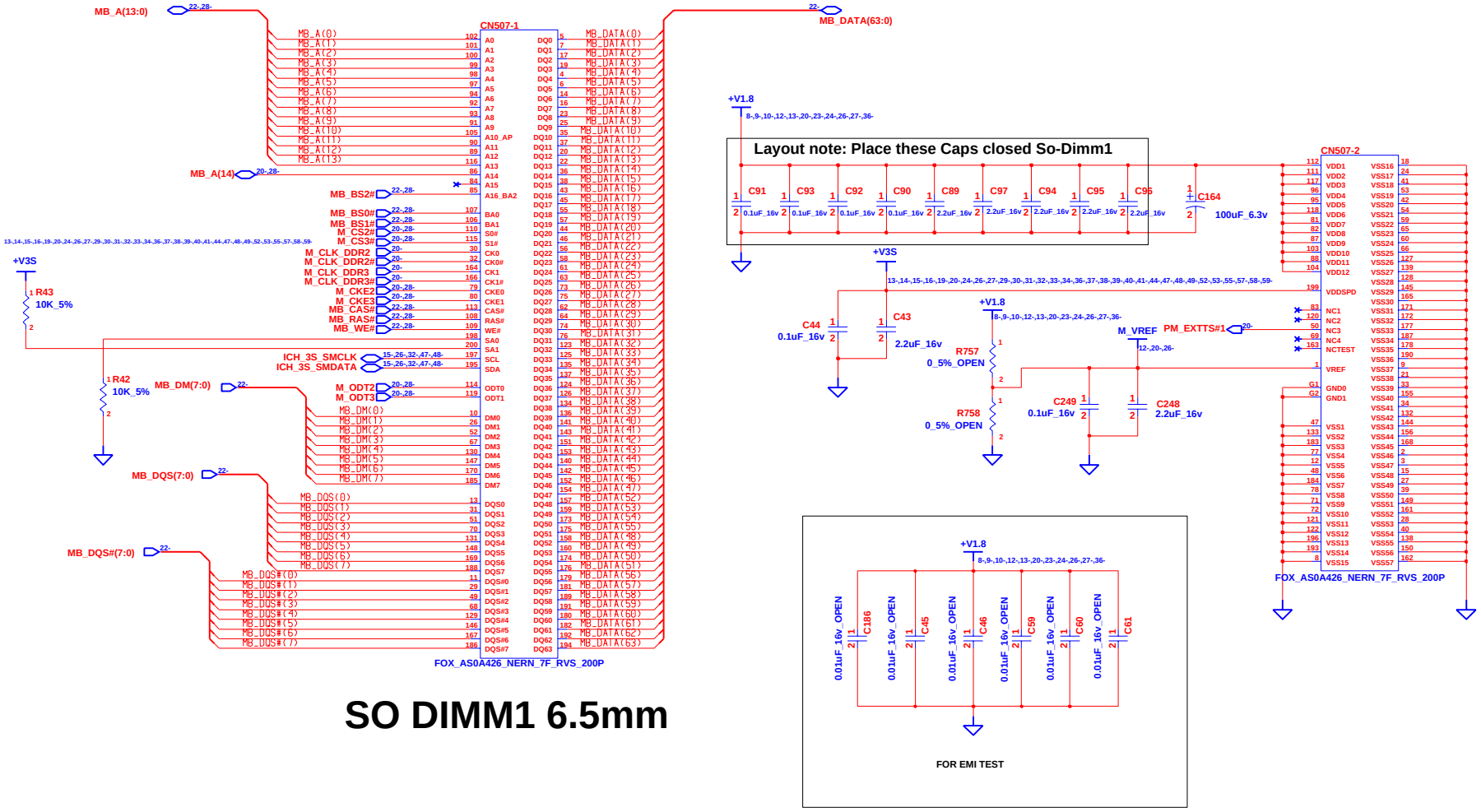

SO DIMM1 6.5mm

CHANGE by	Drawer_Name	9-Oct-2007	

INVENTEC

TITLE **DIABLO**
DDR2-DIMM1

SIZE	CODE	DOC. NUMBER	REV
A3	CS	Model_No	AX1

SHEET 27 OF 61

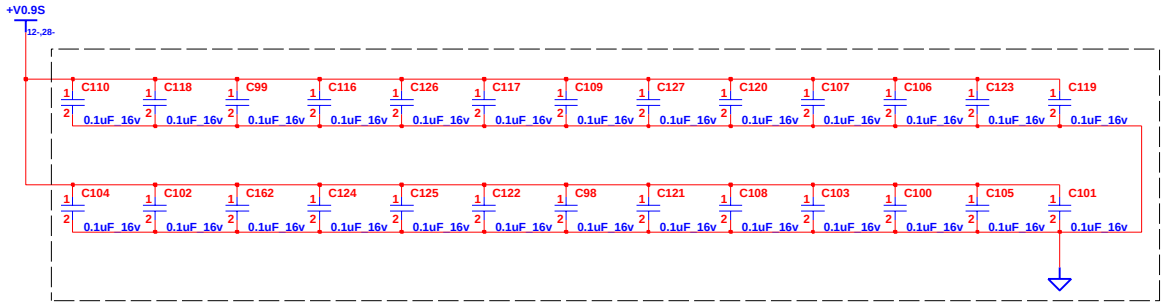

LAYOUT NOTES : PLACE ONE CAP CLOSE TO EVERY 2 PULL UP RESISTOR TERMINATED TO +V0.9S

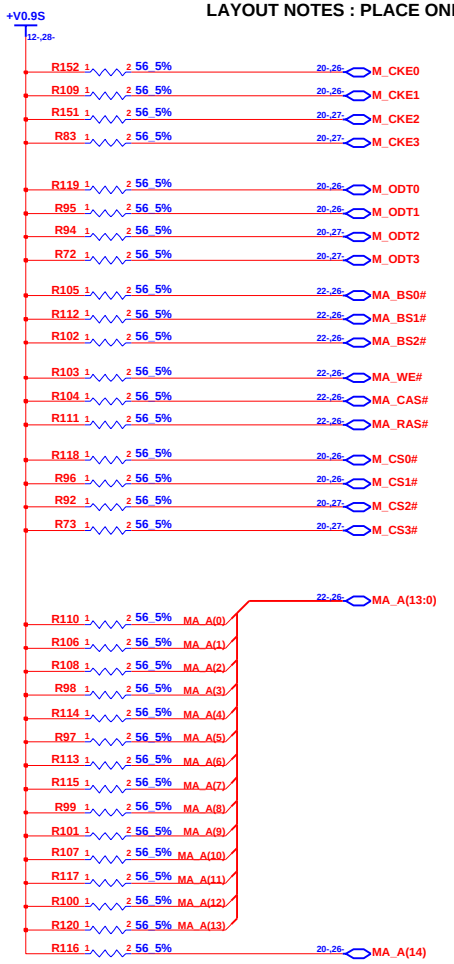

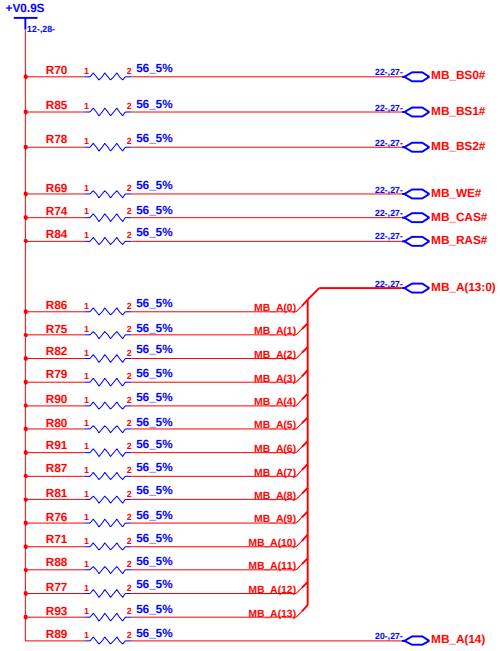

CHANGE by	Drawer_Name	27-Sep-2003	

INVENTEC

TITLE **DIABLO**
DDR2-DAMPING

SIZE	CODE	DOC. NUMBER	REV
A3	CS	Model_No	AX1

SHEET 28 OF 61

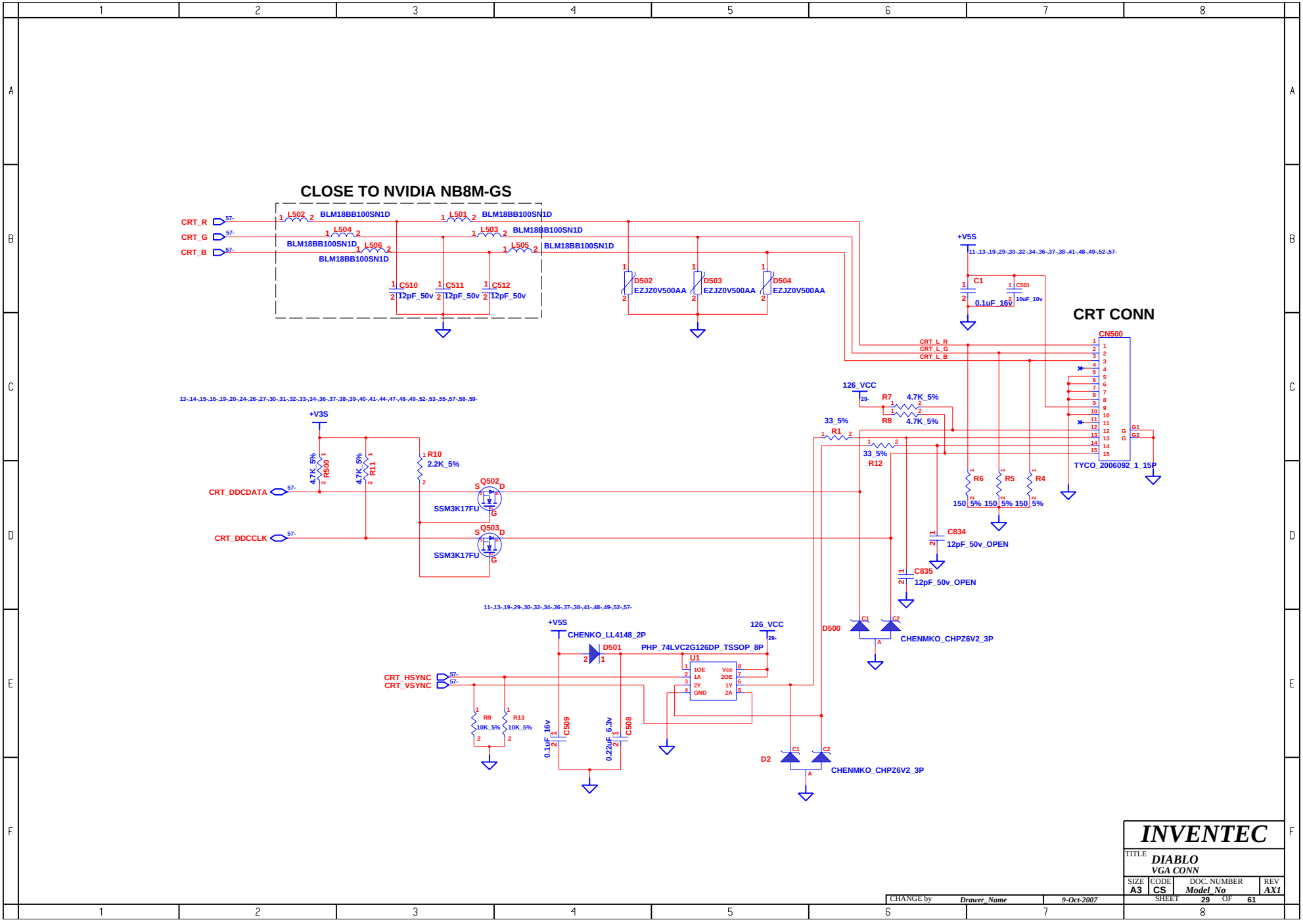
CLOSE TO NVIDIA NB8M-GS
CRT_R
CRT_G
CRT_B
L502 BLM18BB100SN1D
L504 BLM18BB100SN1D
L506 BLM18BB100SN1D
L501 BLM18BB100SN1D
L503 BLM18BB100SN1D
L505 BLM18BB100SN1D
C510 12pF_50v
C511 12pF_50v
C512 12pF_50v
D502 EZJZ0V500AA
D503 EZJZ0V500AA
D504 EZJZ0V500AA
+V5S
C1 0.1uF_16v
C501 10uF_10v
CRT CONN
CN500
CRT_L_R
CRT_L_G
CRT_L_B
TYCO_2006092_1_15P
126_VCC
R7 4.7K_5%
R8 4.7K_5%
33_5%
R1
R12 33_5%
R6 150_5%
R5 150_5%
R4 150_5%
C834 12pF_50v_OPEN
C835 12pF_50v_OPEN
D500
CHENMKO_CHPZ6V2_3P
+V3S
R500 4.7K_5%
R11 4.7K_5%
R10 2.2K_5%
CRT_DDCDATA
CRT_DDCCLK
Q502 SSM3K17FU
Q503 SSM3K17FU
CHENKO_LL4148_2P
D501
PHP_74LVC2G126DP_TSSOP_8P
U1
CRT_HSYNC
CRT_VSYNC
R9 10K_5%
R13 10K_5%
C509 0.1uF_16v
C508 0.22uF_6.3v
D2
CHENMKO_CHPZ6V2_3P
INVENTEC
TITLE DIABLO
VGA CONN
SIZE A3
CODE CS
DOC. NUMBER Model_No
REV AX1
SHEET 29 OF 61
CHANGE by Drawer_Name
9-Oct-2007

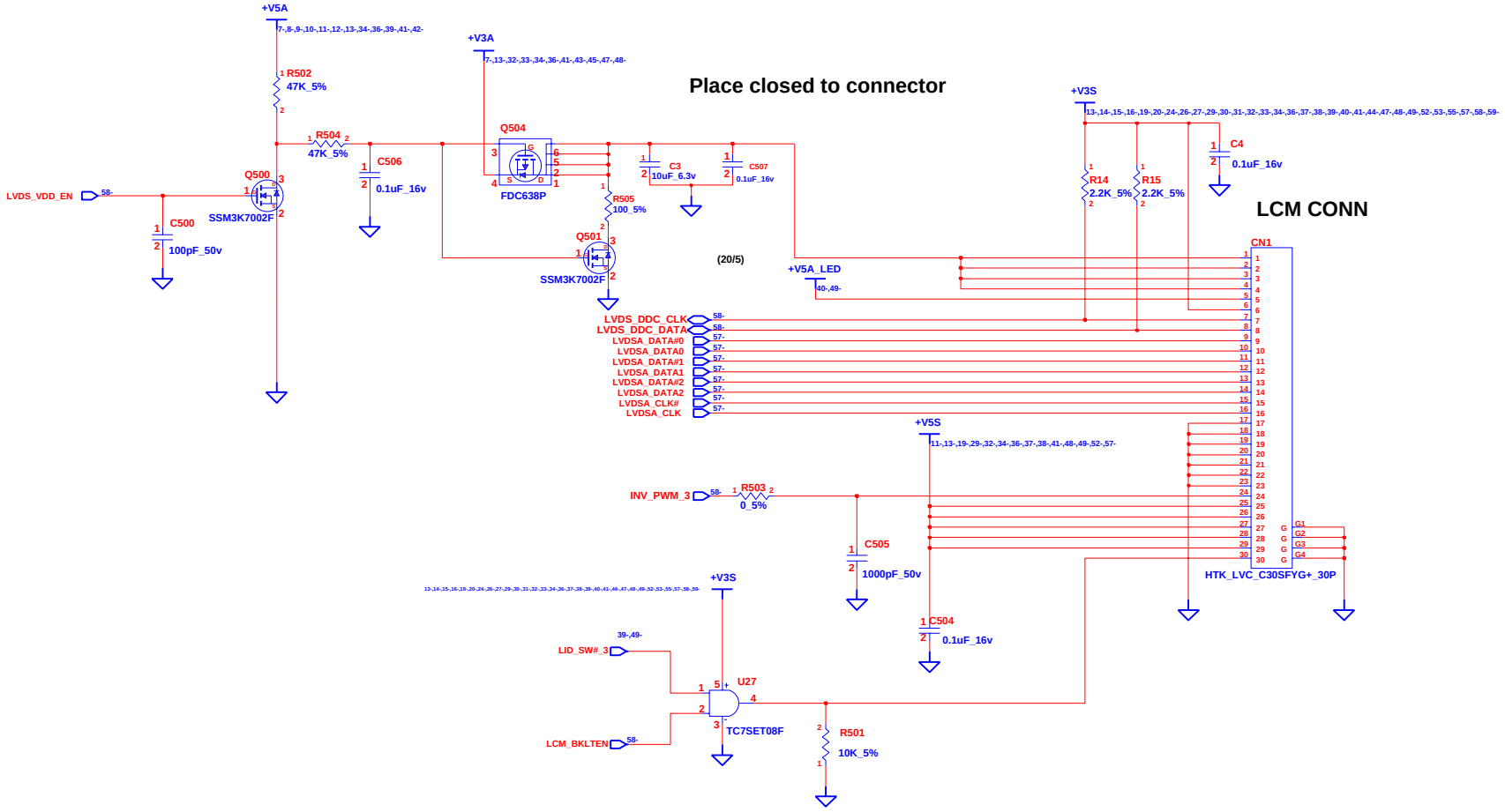

INVENTEC

TITLE DIABLO
LCM CONN

SIZE	CODE	DOC. NUMBER	REV
A3	CS	Model_No	AX1

CHANGE by Drawer_Name 9-Oct-2007 SHEET 30 OF 61

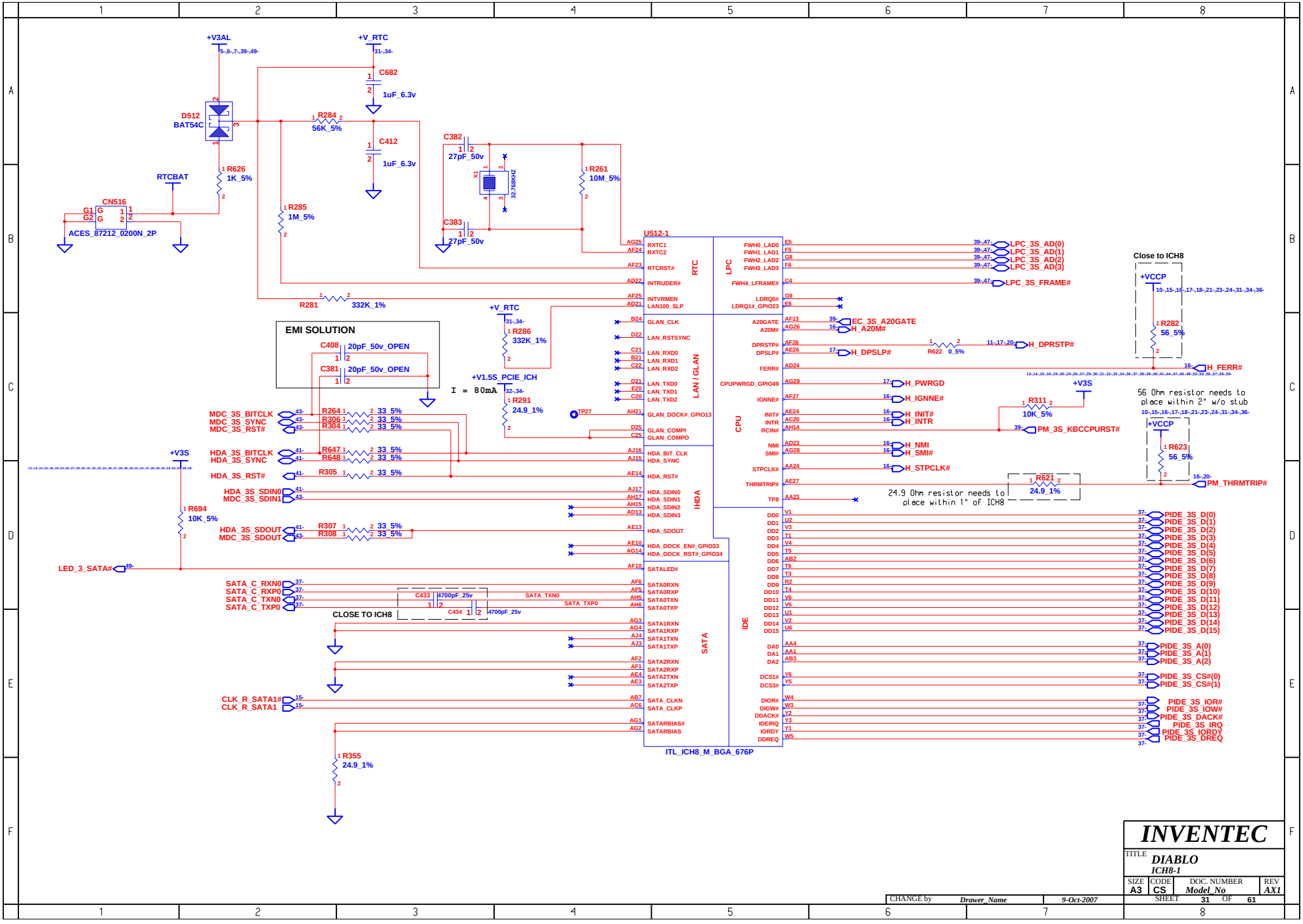
+V3AL
+V_RTC
C682
1uF_6.3v
D512
BAT54C
R284
56K_5%
C412
1uF_6.3v
C382
27pF_50v
X1
32.768KHZ
R261
10M_5%
C383
27pF_50v
R626
1K_5%
RTCBAT
CN516
ACES_87212_0200N_2P
R285
1M_5%
R281
332K_1%
U512-1
RTC
LPC
LAN / GLAN
CPU
IHDA
IDE
SATA
ITL_ICH8_M_BGA_676P
LPC_3S_AD(0)
LPC_3S_AD(1)
LPC_3S_AD(2)
LPC_3S_AD(3)
LPC_3S_FRAME#
EC_3S_A20GATE
H_A20M#
H_DPRSTP#
H_DPSLP#
R622 0_5%
H_FERR#
H_PWRGD
H_IGNNE#
H_INIT#
H_INTR
PM_3S_KBCCPURST#
H_NMI
H_SMI#
H_STPCLK#
PM_THRMTRIP#
R621
24.9_1%
24.9 Ohm resistor needs to place within 1" of ICH8
Close to ICH8
+VCCP
R282
56_5%
R623
56_5%
56 Ohm resistor needs to place within 2" w/o stub
R311
10K_5%
+V3S
EMI SOLUTION
C408
20pF_50v_OPEN
C381
20pF_50v_OPEN
R286
332K_1%
+V1.5S_PCIE_ICH
I = 80mA
R291
24.9_1%
TP27
MDC_3S_BITCLK
MDC_3S_SYNC
MDC_3S_RST#
R264
R306
R304
33_5%
HDA_3S_BITCLK
HDA_3S_SYNC
R647
R648
HDA_3S_RST#
R305
HDA_3S_SDIN0
MDC_3S_SDIN1
R694
10K_5%
HDA_3S_SDOUT
MDC_3S_SDOUT
R307
R308
LED_3_SATA#
SATA_C_RXN0
SATA_C_RXP0
SATA_C_TXN0
SATA_C_TXP0
C433
4700pF_25v
C434
4700pF_25v
SATA_TXN0
SATA_TXP0
CLOSE TO ICH8
CLK_R_SATA1#
CLK_R_SATA1
R355
24.9_1%
PIDE_3S_D(0)
PIDE_3S_D(1)
PIDE_3S_D(2)
PIDE_3S_D(3)
PIDE_3S_D(4)
PIDE_3S_D(5)
PIDE_3S_D(6)
PIDE_3S_D(7)
PIDE_3S_D(8)
PIDE_3S_D(9)
PIDE_3S_D(10)
PIDE_3S_D(11)
PIDE_3S_D(12)
PIDE_3S_D(13)
PIDE_3S_D(14)
PIDE_3S_D(15)
PIDE_3S_A(0)
PIDE_3S_A(1)
PIDE_3S_A(2)
PIDE_3S_CS#(0)
PIDE_3S_CS#(1)
PIDE_3S_IOR#
PIDE_3S_IOW#
PIDE_3S_DACK#
PIDE_3S_IRQ
PIDE_3S_IORDY
PIDE_3S_DREQ
INVENTEC
TITLE
DIABLO
ICH8-1
SIZE A3
CODE CS
DOC. NUMBER Model_No
REV AX1
SHEET 31 OF 61
CHANGE by Drawer_Name
9-Oct-2007

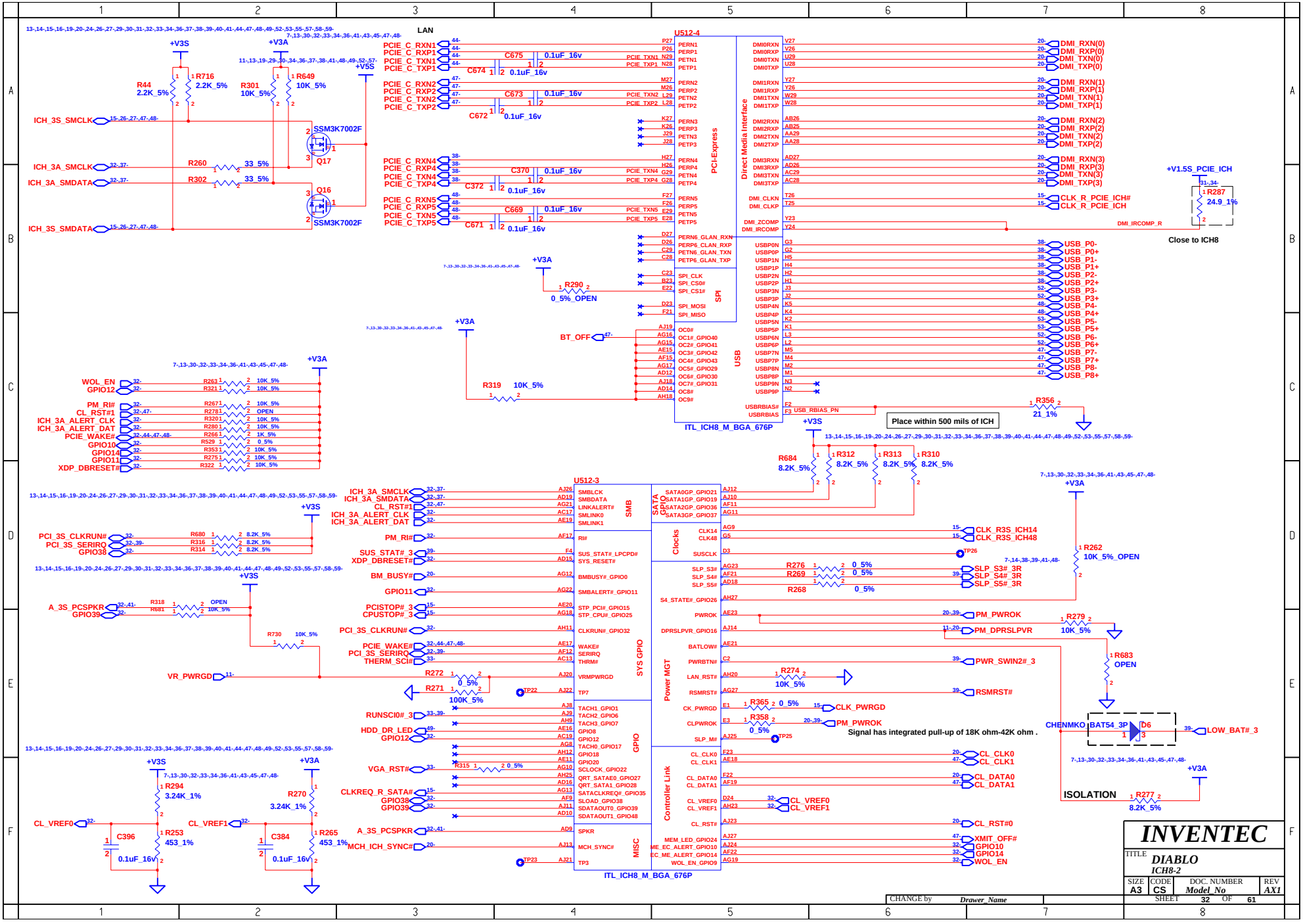
LAN
U512-4
PCI-Express
Direct Media Interface
USB
SPI
ITL_ICH8_M_BGA_676P
U512-3
SMB
SATA GPIO
Clocks
Power MGT
SYS GPIO
GPIO
Controller Link
MISC
ITL_ICH8_M_BGA_676P
Close to ICH8
Place within 500 mils of ICH
Signal has integrated pull-up of 18K ohm-42K ohm .
ISOLATION
INVENTEC
TITLE
DIABLO
ICH8-2
SIZE A3
CODE CS
DOC. NUMBER Model_No
REV AX1
SHEET 32 OF 61
CHANGE by Drawer_Name

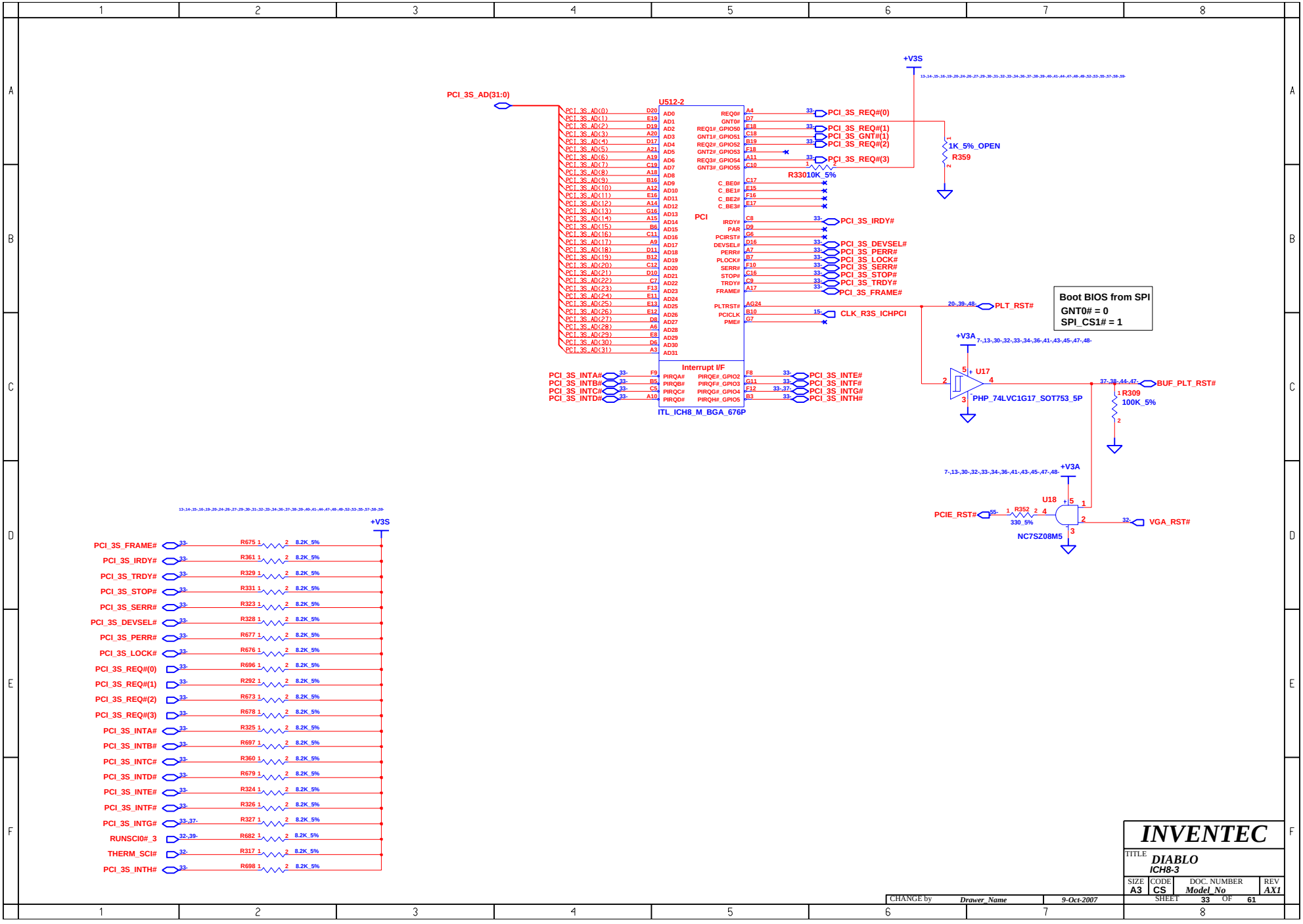
PCI_3S_AD(31:0)
U512-2
PCI
Interrupt I/F
ITL_ICH8_M_BGA_676P
PCI_3S_REQ#(0)
PCI_3S_REQ#(1)
PCI_3S_GNT#(1)
PCI_3S_REQ#(2)
PCI_3S_REQ#(3)
PCI_3S_IRDY#
PCI_3S_DEVSEL#
PCI_3S_PERR#
PCI_3S_LOCK#
PCI_3S_SERR#
PCI_3S_STOP#
PCI_3S_TRDY#
PCI_3S_FRAME#
CLK_R3S_ICHPCI
PLT_RST#
PCI_3S_INTA#
PCI_3S_INTB#
PCI_3S_INTC#
PCI_3S_INTD#
PCI_3S_INTE#
PCI_3S_INTF#
PCI_3S_INTG#
PCI_3S_INTH#
+V3S
1K_5%_OPEN
R359
R330 10K_5%
+V3A
U17
PHP_74LVC1G17_SOT753_5P
BUF_PLT_RST#
R309
100K_5%
U18
NC7SZ08M5
PCIE_RST#
R352
330_5%
VGA_RST#
Boot BIOS from SPI
GNT0# = 0
SPI_CS1# = 1
R675 8.2K_5%
R361 8.2K_5%
R329 8.2K_5%
R331 8.2K_5%
R323 8.2K_5%
R328 8.2K_5%
R677 8.2K_5%
R676 8.2K_5%
R696 8.2K_5%
R292 8.2K_5%
R673 8.2K_5%
R678 8.2K_5%
R325 8.2K_5%
R697 8.2K_5%
R360 8.2K_5%
R679 8.2K_5%
R324 8.2K_5%
R326 8.2K_5%
R327 8.2K_5%
R682 8.2K_5%
R317 8.2K_5%
R698 8.2K_5%
RUNSCI0#_3
THERM_SCI#
INVENTEC
TITLE
DIABLO
ICH8-3
SIZE A3
CODE CS
DOC. NUMBER Model_No
REV AX1
SHEET 33 OF 61
CHANGE by Drawer_Name
9-Oct-2007

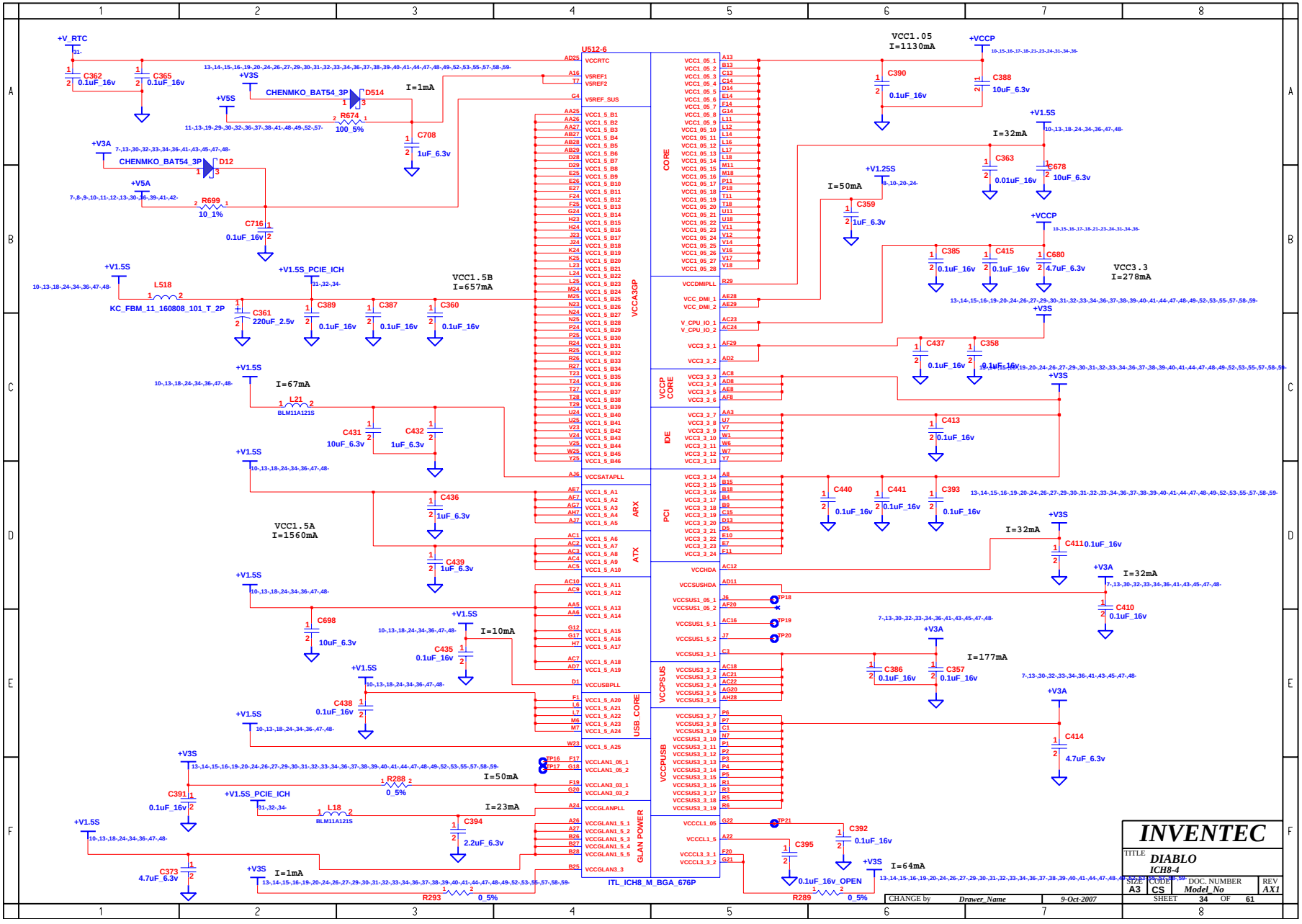
U512-6
ITL_ICH8_M_BGA_676P
CORE
VCCA3GP
VCCP CORE
IDE
PCI
ARX
ATX
USB_CORE
VCCPSUS
VCCPUSB
GLAN POWER
+V_RTC
C362 0.1uF_16v
C365 0.1uF_16v
+V3S
CHENMKO_BAT54_3P
D514
I=1mA
+V5S
R674 100_5%
C708 1uF_6.3v
+V3A
CHENMKO_BAT54_3P
D12
+V5A
R699 10_1%
C716 0.1uF_16v
+V1.5S
L518
KC_FBM_11_160808_101_T_2P
C361 220uF_2.5v
+V1.5S_PCIE_ICH
C389 0.1uF_16v
C387 0.1uF_16v
C360 0.1uF_16v
VCC1.5B
I=657mA
I=67mA
L21
BLM11A121S
C431 10uF_6.3v
C432 1uF_6.3v
C436 1uF_6.3v
VCC1.5A
I=1560mA
C439 1uF_6.3v
C698 10uF_6.3v
I=10mA
C435 0.1uF_16v
C438 0.1uF_16v
R288 0_5%
I=50mA
C391 0.1uF_16v
L18
BLM11A121S
I=23mA
C394 2.2uF_6.3v
C373 4.7uF_6.3v
I=1mA
R293 0_5%
VCC1.05
I=1130mA
+VCCP
C390 0.1uF_16v
C388 10uF_6.3v
+V1.5S
I=32mA
C363 0.01uF_16v
C678 10uF_6.3v
+V1.25S
I=50mA
C359 1uF_6.3v
C385 0.1uF_16v
C415 0.1uF_16v
C680 4.7uF_6.3v
VCC3.3
I=278mA
C437 0.1uF_16v
C358 0.1uF_16v
C413 0.1uF_16v
C440 0.1uF_16v
C441 0.1uF_16v
C393 0.1uF_16v
C411 0.1uF_16v
I=32mA
C410 0.1uF_16v
C386 0.1uF_16v
C357 0.1uF_16v
I=177mA
C414 4.7uF_6.3v
C392 0.1uF_16v
C395 0.1uF_16v_OPEN
I=64mA
R289 0_5%
INVENTEC
TITLE DIABLO
ICH8-4
SIZE A3
CODE CS
DOC. NUMBER Model_No
REV AX1
CHANGE by Drawer_Name
9-Oct-2007
SHEET 34 OF 61

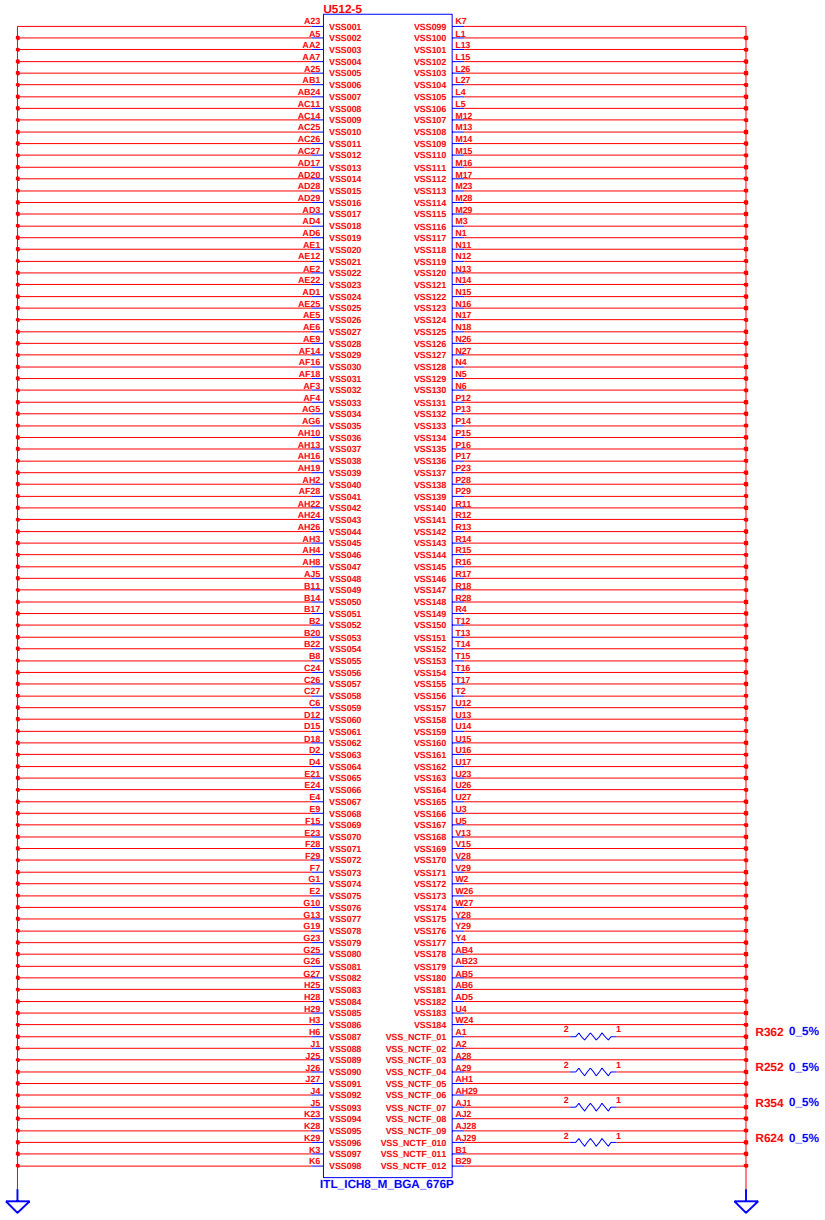

CHANGE by	Drawer_Name	9-Oct-2007	

INVENTEC

TITLE **DIABLO**
ICH8-5

SIZE	CODE	DOC. NUMBER	REV
A3	CS	Model_No	AX1

SHEET 35 OF 61

CHANGE by	Drawer_Name	9-Oct-2007

INVENTEC

TITLE
DIABLO
SYSTEM BIOS&ODD EXT/B

SIZE	CODE	DOC. NUMBER	REV
A3	CS	Model_No	AX1

SHEET 36 OF 61

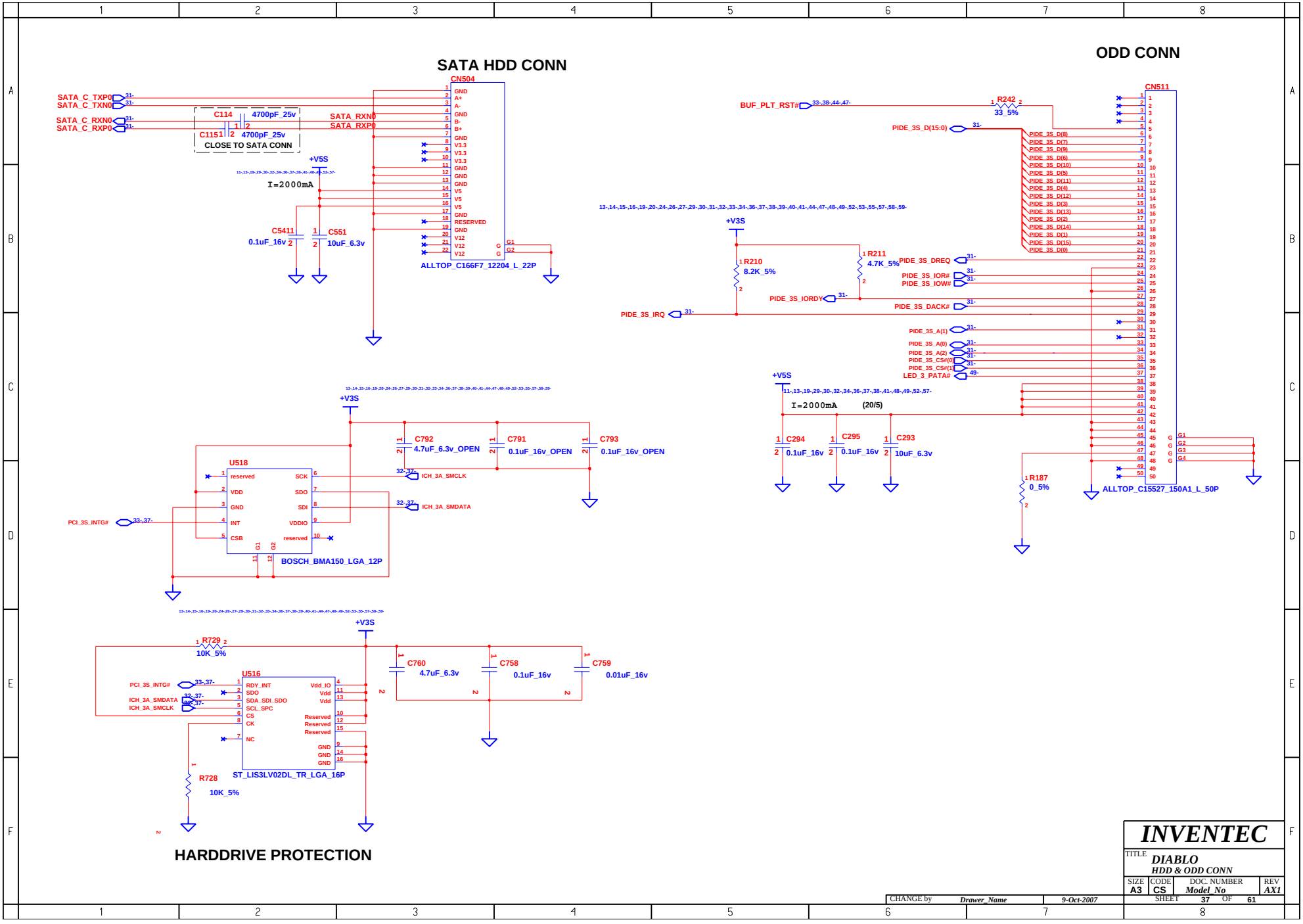
SATA HDD CONN
ODD CONN
CN504
CN511
SATA_C_TXP0
SATA_C_TXN0
SATA_C_RXN0
SATA_C_RXP0
SATA_RXN0
SATA_RXP0
C114 4700pF_25v
C115 4700pF_25v
CLOSE TO SATA CONN
+V5S
I=2000mA
C5411 0.1uF_16v
C551 10uF_6.3v
ALLTOP_C166F7_12204_L_22P
BUF_PLT_RST#
R242 33_5%
PIDE_3S_D(15:0)
R210 8.2K_5%
R211 4.7K_5%
+V3S
PIDE_3S_DREQ
PIDE_3S_IOR#
PIDE_3S_IOW#
PIDE_3S_IORDY
PIDE_3S_DACK#
PIDE_3S_IRQ
PIDE_3S_A(1)
PIDE_3S_A(0)
PIDE_3S_A(2)
PIDE_3S_CS#(0)
PIDE_3S_CS#(1)
LED_3_PATA#
I=2000mA (20/5)
C294 0.1uF_16v
C295 0.1uF_16v
C293 10uF_6.3v
R187 0_5%
ALLTOP_C15527_150A1_L_50P
U518
reserved
VDD
GND
INT
CSB
SCK
SDO
SDI
VDDIO
reserved
BOSCH_BMA150_LGA_12P
PCI_3S_INTG#
ICH_3A_SMCLK
ICH_3A_SMDATA
C792 4.7uF_6.3v_OPEN
C791 0.1uF_16v_OPEN
C793 0.1uF_16v_OPEN
R729 10K_5%
U516
RDY_INT
SDO
SDA_SDI_SDO
SCL_SPC
CS
CK
NC
Vdd_IO
Vdd
Reserved
GND
ST_LIS3LV02DL_TR_LGA_16P
R728 10K_5%
C760 4.7uF_6.3v
C758 0.1uF_16v
C759 0.01uF_16v
HARDDRIVE PROTECTION
INVENTEC
TITLE DIABLO
HDD & ODD CONN
SIZE A3
CODE CS
DOC. NUMBER Model_No
REV AX1
CHANGE by Drawer_Name
9-Oct-2007
SHEET 37 OF 61

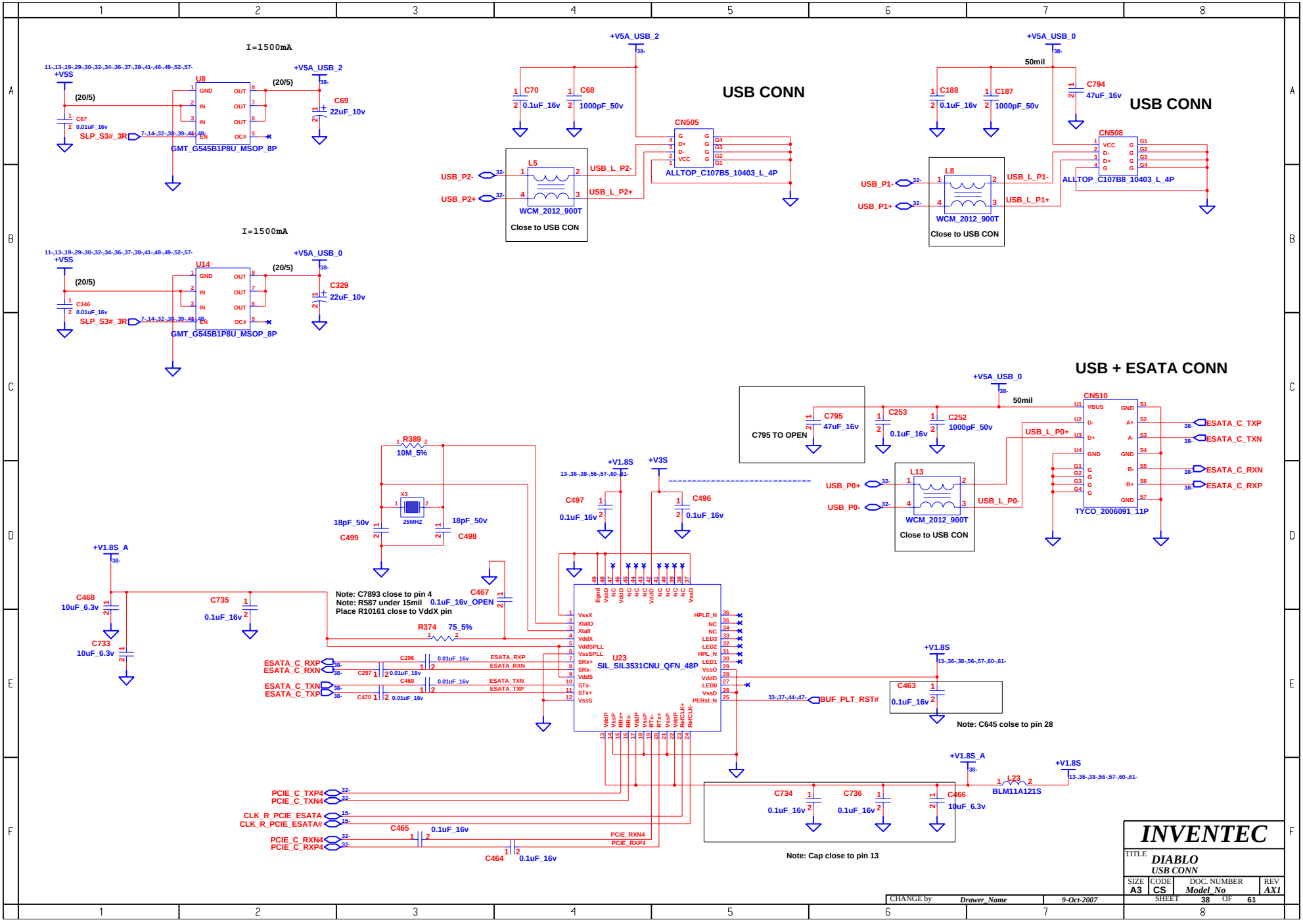
USB CONN
USB CONN
USB + ESATA CONN
I=1500mA
I=1500mA
U8
GMT_G545B1P8U_MSOP_8P
U14
GMT_G545B1P8U_MSOP_8P
+V5S
+V5A_USB_2
+V5A_USB_0
SLP_S3#_3R
C67 0.01uF_16v
C69 22uF_10v
C329 22uF_10v
C346 0.01uF_16v
C70 0.1uF_16v
C68 1000pF_50v
CN505
ALLTOP_C107B5_10403_L_4P
L5
WCM_2012_900T
Close to USB CON
USB_P2-
USB_P2+
USB_L_P2-
USB_L_P2+
C188 0.1uF_16v
C187 1000pF_50v
C794 47uF_16v
50mil
CN508
ALLTOP_C107B8_10403_L_4P
L8
WCM_2012_900T
Close to USB CON
USB_P1-
USB_P1+
USB_L_P1-
USB_L_P1+
C795 TO OPEN
C795 47uF_16v
C253 0.1uF_16v
C252 1000pF_50v
CN510
TYCO_2006091_11P
L13
WCM_2012_900T
Close to USB CON
USB_P0+
USB_P0-
USB_L_P0+
USB_L_P0-
ESATA_C_TXP
ESATA_C_TXN
ESATA_C_RXN
ESATA_C_RXP
R389 10M_5%
X3 25MHZ
18pF_50v C499
18pF_50v C498
C497 0.1uF_16v
C496 0.1uF_16v
+V1.8S
+V3S
+V1.8S_A
C468 10uF_6.3v
C733 10uF_6.3v
C735 0.1uF_16v
C467 0.1uF_16v_OPEN
Note: C7893 close to pin 4
Note: R587 under 15mil
Place R10161 close to VddX pin
R374 75_5%
U23
SIL_SIL3531CNU_QFN_48P
ESATA_C_RXP
ESATA_C_RXN
ESATA_C_TXN
ESATA_C_TXP
C296 0.01uF_16v
C297 0.01uF_16v
C469 0.01uF_16v
C470 0.01uF_16v
ESATA_RXP
ESATA_RXN
ESATA_TXN
ESATA_TXP
BUF_PLT_RST#
C463 0.1uF_16v
Note: C645 colse to pin 28
PCIE_C_TXP4
PCIE_C_TXN4
CLK_R_PCIE_ESATA
CLK_R_PCIE_ESATA#
PCIE_C_RXN4
PCIE_C_RXP4
C465 0.1uF_16v
C464 0.1uF_16v
PCIE_RXN4
PCIE_RXP4
C734 0.1uF_16v
C736 0.1uF_16v
C466 10uF_6.3v
L23 BLM11A121S
Note: Cap close to pin 13
INVENTEC
TITLE DIABLO
USB CONN
SIZE A3
CODE CS
DOC. NUMBER Model_No
REV AX1
SHEET 38 OF 61
CHANGE by Drawer_Name
9-Oct-2007

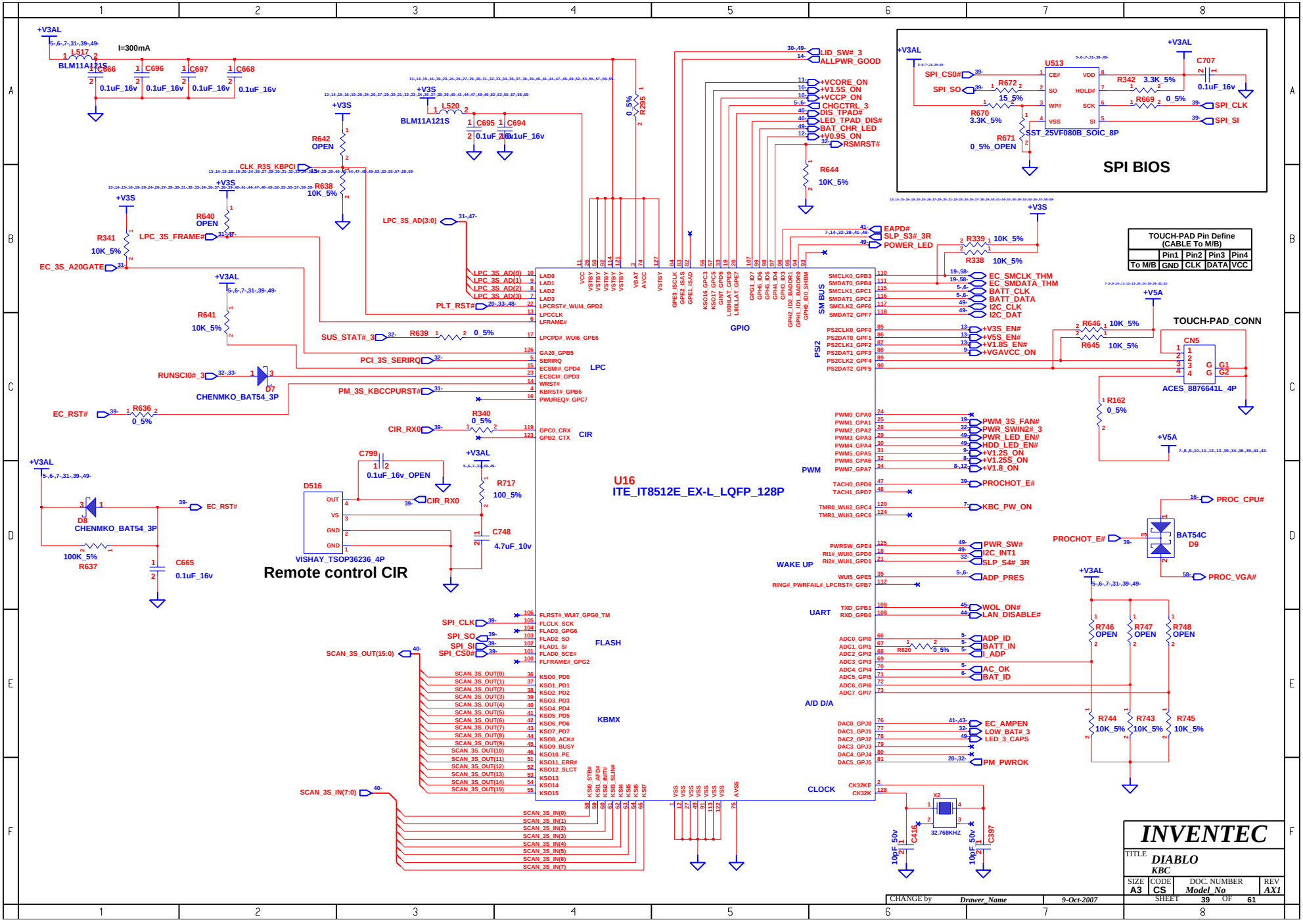
U16
ITE_IT8512E_EX-L_LQFP_128P
SPI BIOS
U513
SST_25VF080B_SOIC_8P
Remote control CIR
VISHAY_TSOP36236_4P
TOUCH-PAD_CONN
CN5
ACES_8876641L_4P
TOUCH-PAD Pin Define (CABLE To M/B)
Pin1 Pin2 Pin3 Pin4
To M/B GND CLK DATA VCC
INVENTEC
TITLE DIABLO
KBC
SIZE A3 CODE CS DOC. NUMBER Model_No REV AX1
SHEET 39 OF 61
CHANGE by Drawer_Name 9-Oct-2007

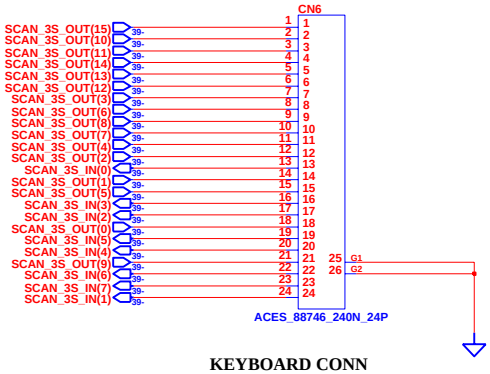

KEYBOARD CONN

13-,14-,15-,16-,19-,20-,24-,26-,27-,29-,30-,31-,32-,33-,34-,36-,37-,38-,39-,40-,41-,44-,47-,48-,49-,52-,53-,55-,57-,58-,59-

TOUCHPAD LED CONN

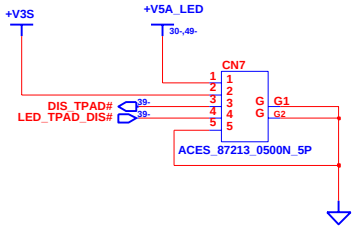

13-,14-,15-,16-,19-,20-,24-,26-,27-,29-,30-,31-,32-,33-,34-,36-,37-,38-,39-,40-,41-,44-,47-,48-,49-,52-,53-,55-,57-,58-,59-

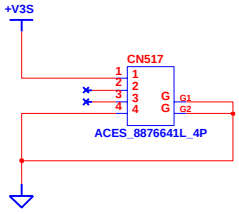

CHANGE by	Drawer_Name	9-Oct-2007	

INVENTEC

TITLE *DIABLO*
KB & TP CONN

SIZE	CODE	DOC. NUMBER	REV
A3	CS	Model_No	AX1

SHEET 40 OF 61

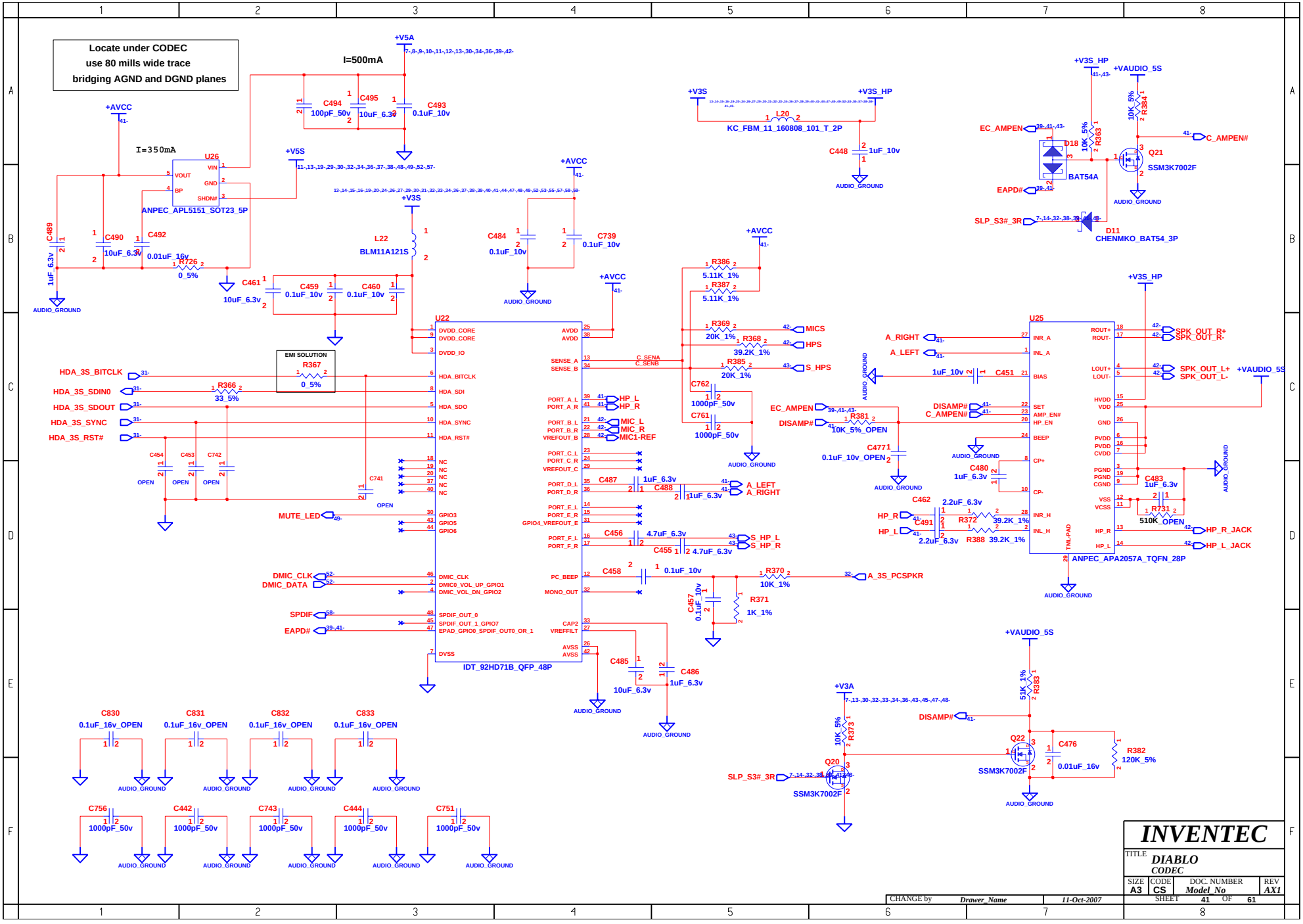

CHANGE by	Drawer_Name	11-Oct-2007	

INVENTEC

TITLE **DIABLO**
CODEC

SIZE	CODE	DOC. NUMBER	REV
A3	CS	Model_No	AX1

SHEET 41 OF 61

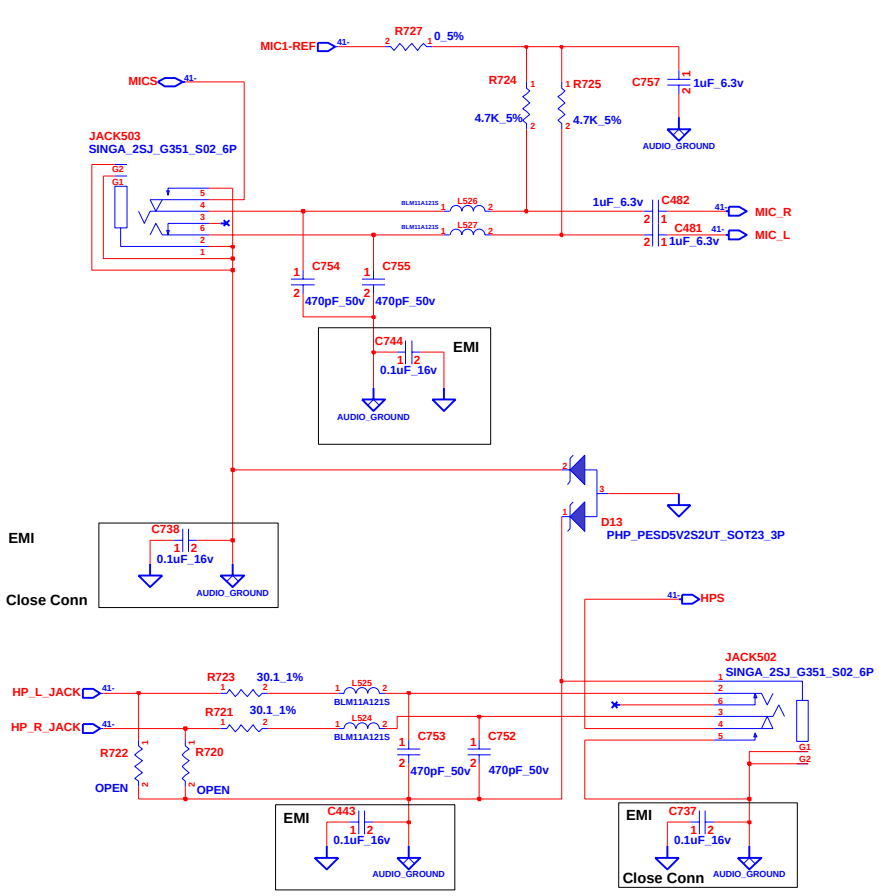

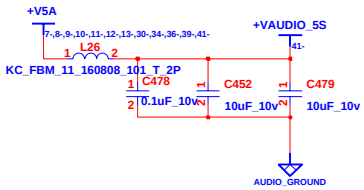

INTERNAL SPEAKER

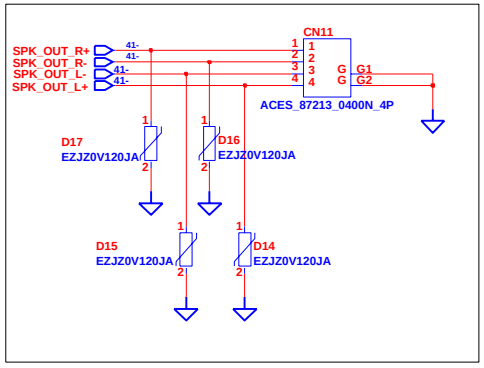

INVENTEC

TITLE **DIABLO**
AMP & MIC & HP

SIZE	CODE	DOC. NUMBER	REV
A3	CS	Model_No	AX1

CHANGE by Drawer_Name 9-Oct-2007 SHEET 42 OF 61

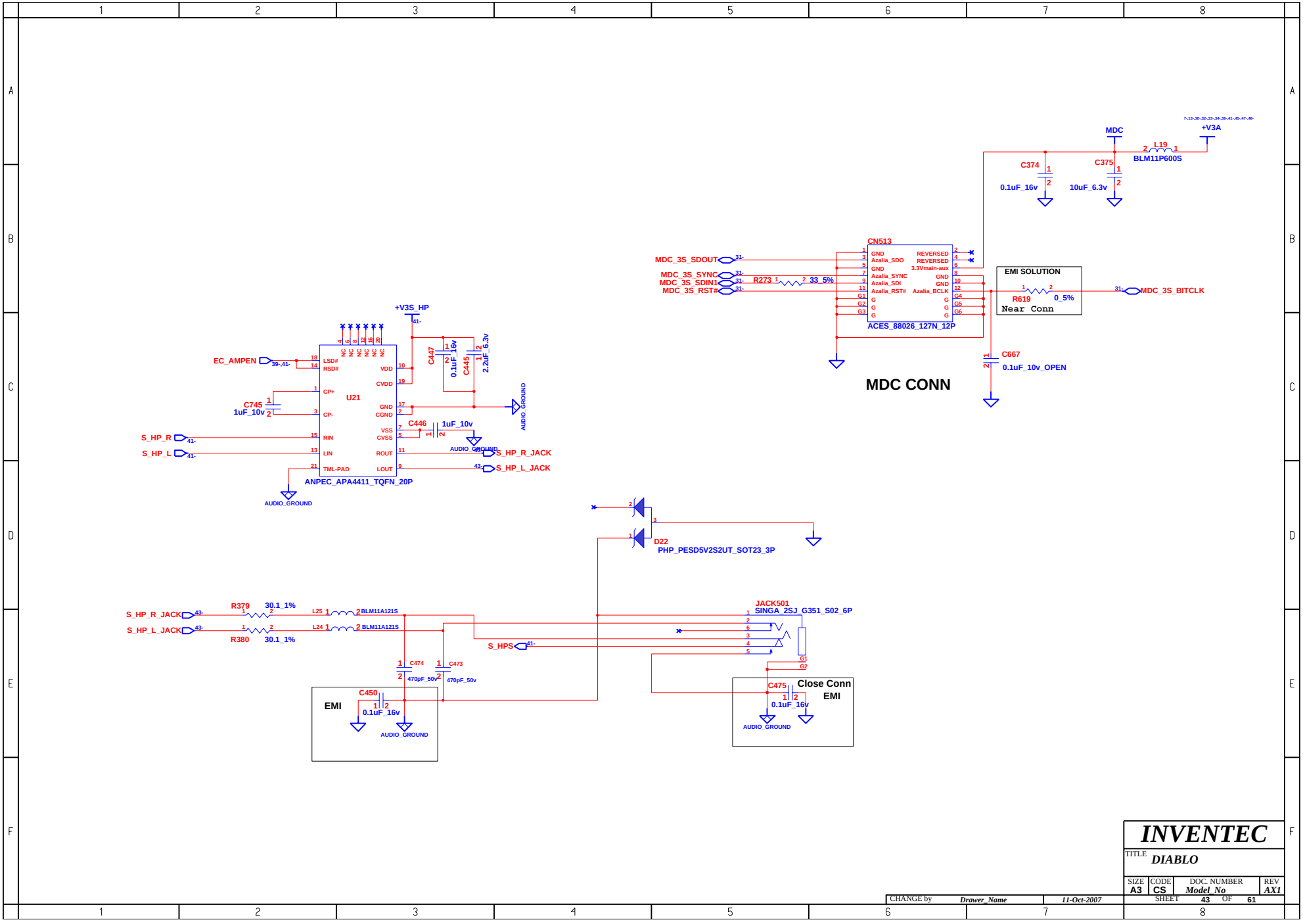

INVENTEC			
TITLE DIABLO			
SIZE A3	CODE CS	DOC. NUMBER Model_No	REV AX1
CHANGE by Drawer_Name	11-Oct-2007	SHEET 43 OF 61	

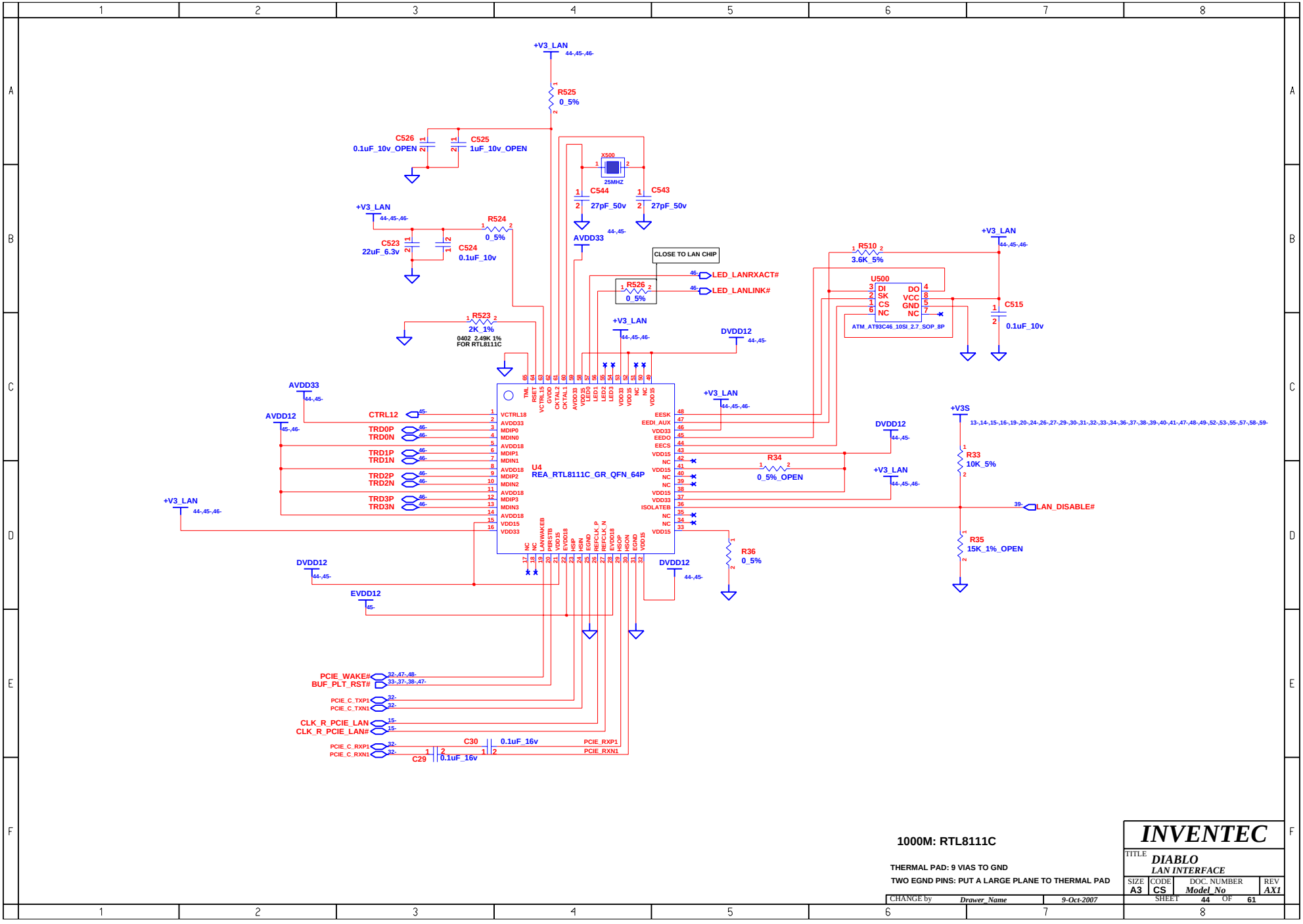

1000M: RTL8111C

THERMAL PAD: 9 VIAS TO GND

TWO EGND PINS: PUT A LARGE PLANE TO THERMAL PAD

INVENTEC			
TITLE: DIABLO LAN INTERFACE			
SIZE: A3	CODE: CS	DOC. NUMBER: Model_No	REV: AX1
CHANGE by: Drawer_Name	9-Oct-2007	SHEET 44 OF 61	

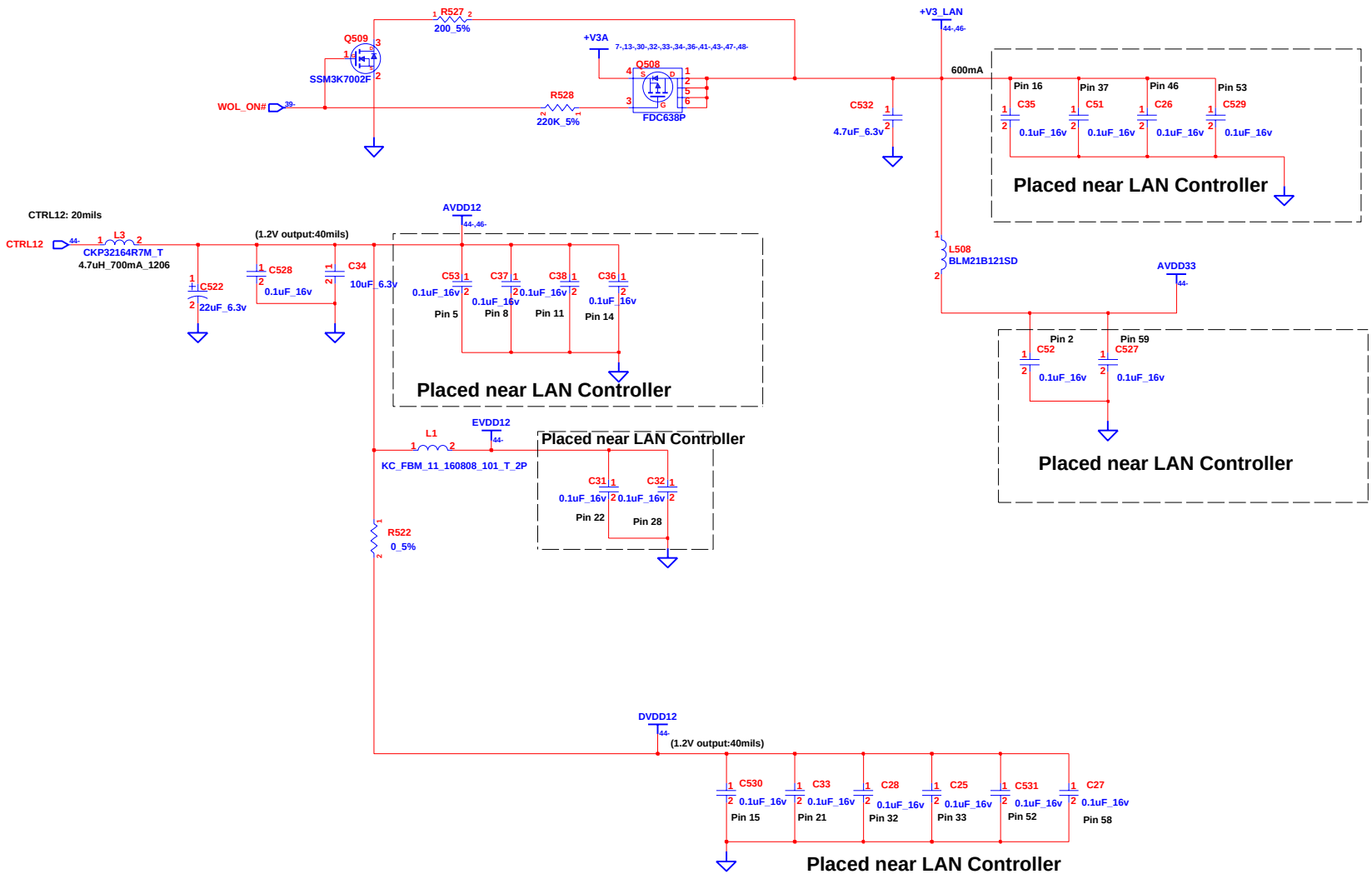

INVENTEC

TITLE DIABLO
LAN POWER

SIZE	CODE	DOC. NUMBER	REV
A3	CS	Model_No	AX1

CHANGE by Drawer_Name 9-Oct-2007

SHEET 45 OF 61

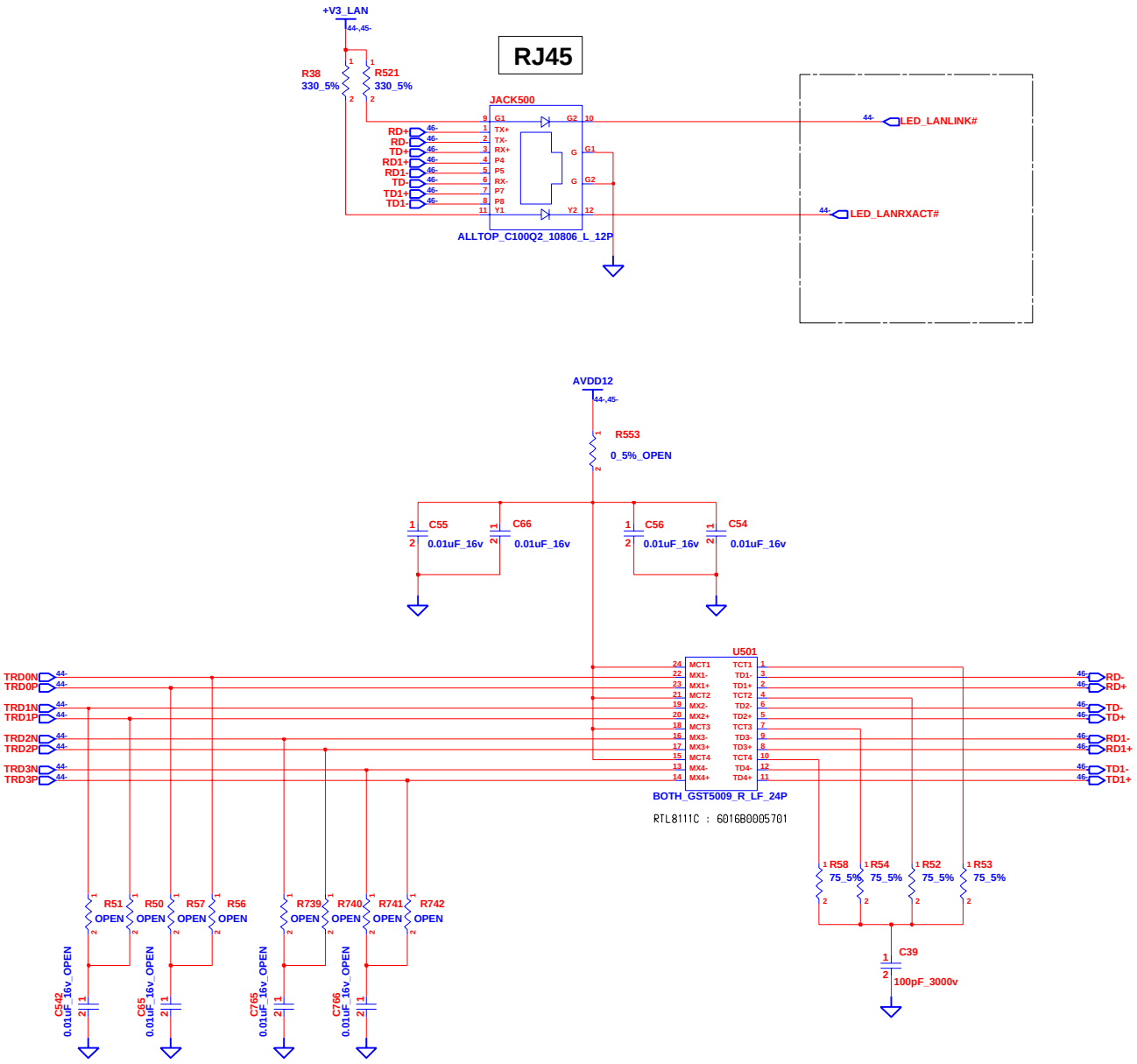

LAYOUT NOTE : Place termination resistors and caps as close to LAN controller as possible

INVENTEC			
TITLE DIABLO LAN RJ45 CONN			
SIZE A3	CODE CS	DOC. NUMBER Model_No	REV AX1
CHANGE by Drawer_Name	9-Oct-2007	SHEET 46 OF 61	

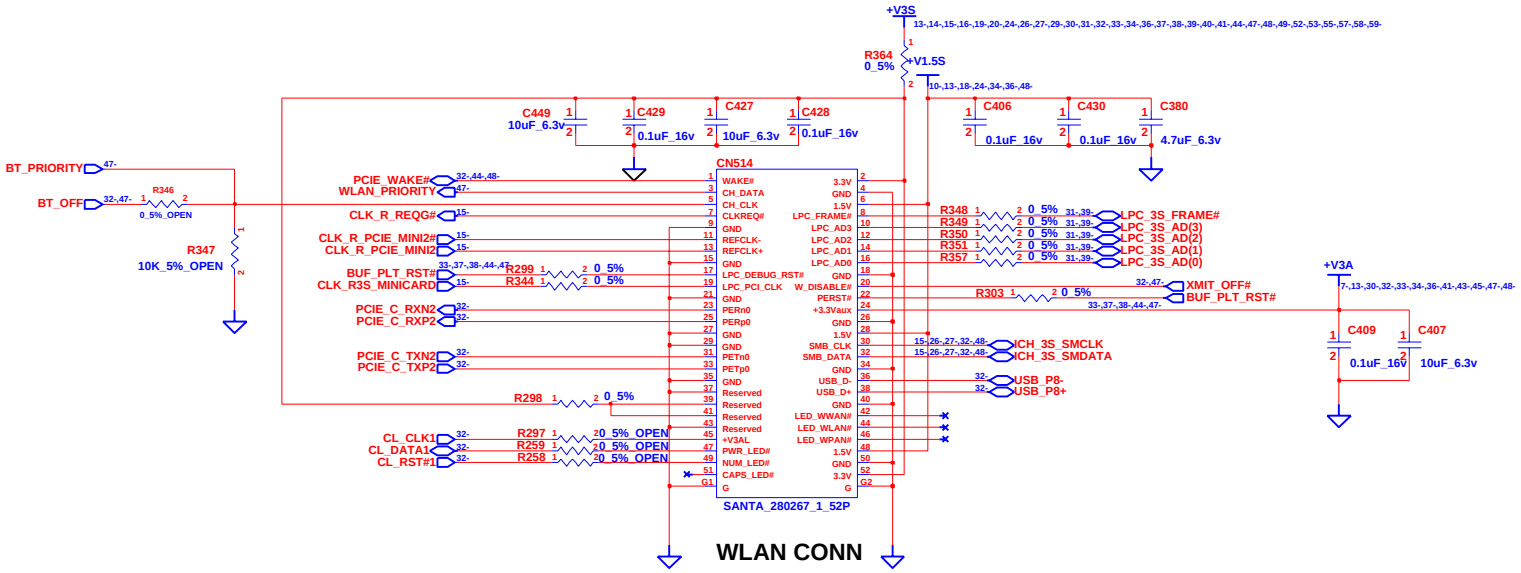

WLAN CONN

R261,R262,R263,R264,R265 place as close to LPC signal as possible to minimize stub length for LPC bus
(will be NI for FCS)

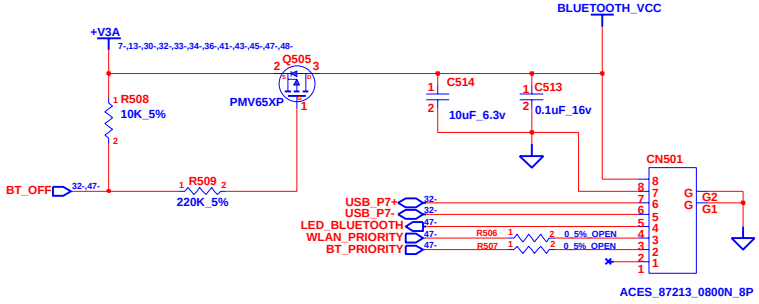

BLUETOOTH CONN

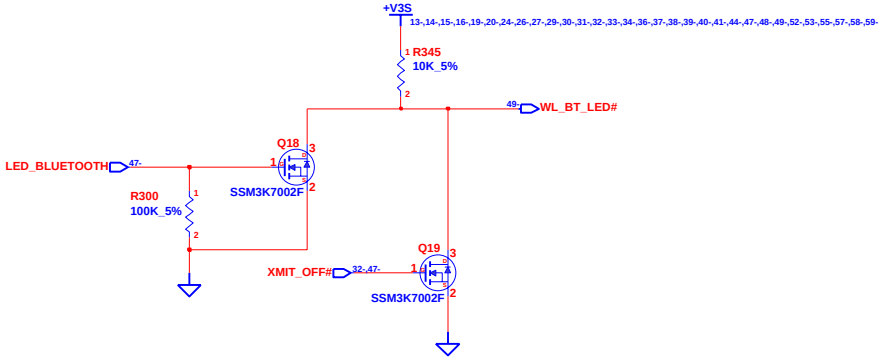

INVENTEC			
TITLE DIABLO MINICARD CONN			
SIZE A3	CODE CS	DOC. NUMBER Model_No	REV AX1
CHANGE by Drawer_Name	9-Oct-2007	SHEET 47 OF 61	

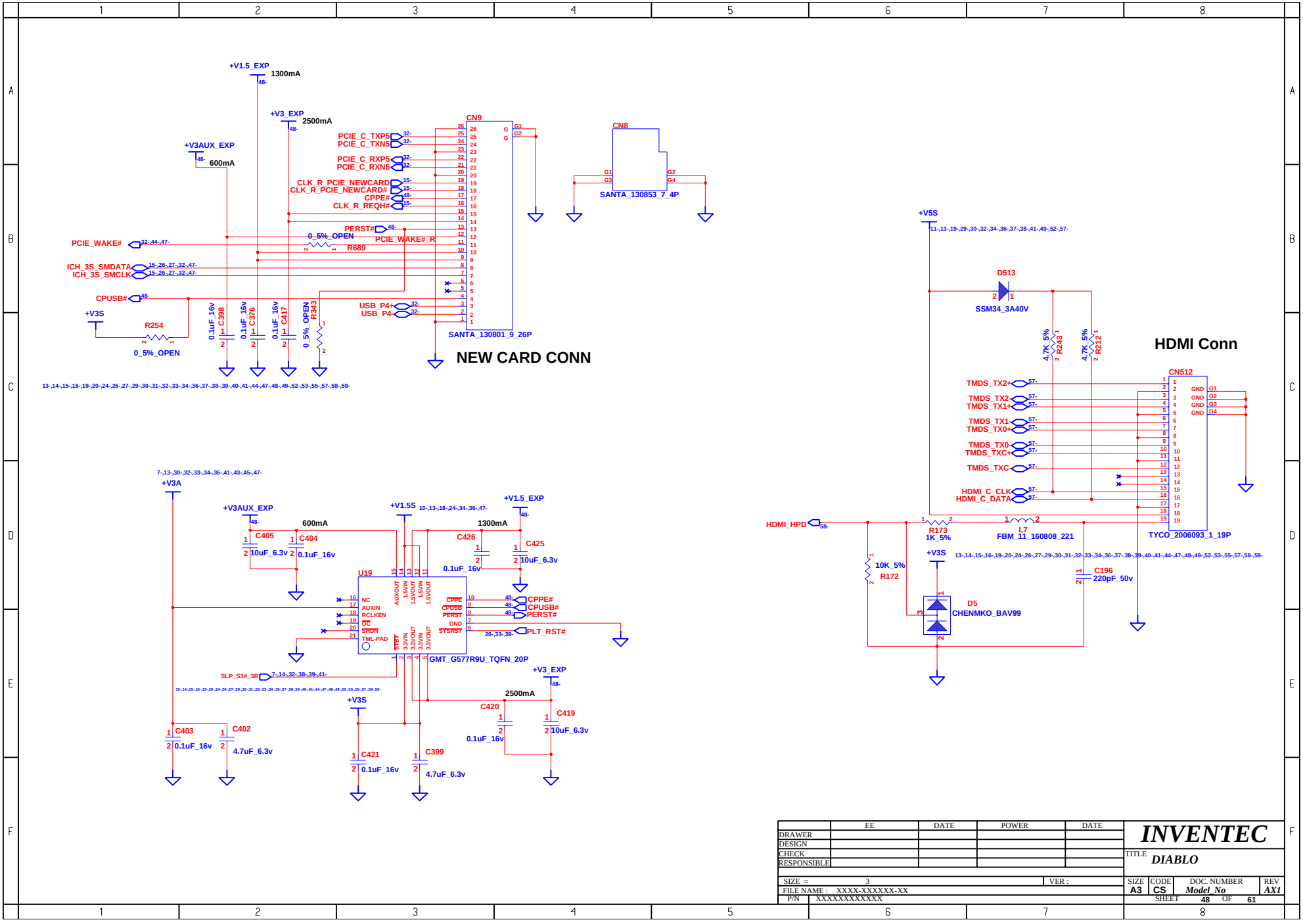

	EE	DATE	POWER	DATE
DRAWER				
DESIGN				
CHECK				
RESPONSIBLE				

SIZE = 3 VER :

FILE NAME : XXXX-XXXXXX-XX

P/N XXXXXXXXXXXX

INVENTEC

TITLE DIABLO

SIZE	CODE	DOC. NUMBER	REV
A3	CS	Model_No	AX1

SHEET 48 OF 61

LED P/N: 6011B0072901

BATTERY-CHARGE LED

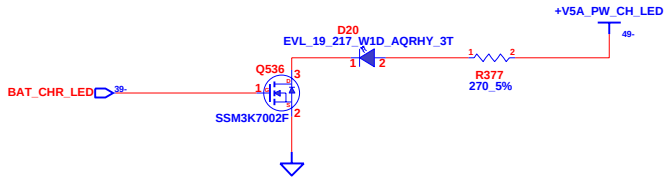

POWER LED

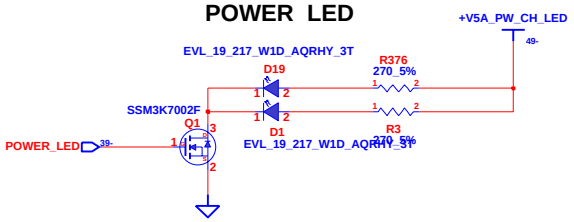

To CAP LED Bd

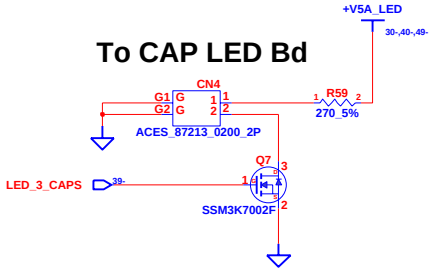

HDD & ODD LED

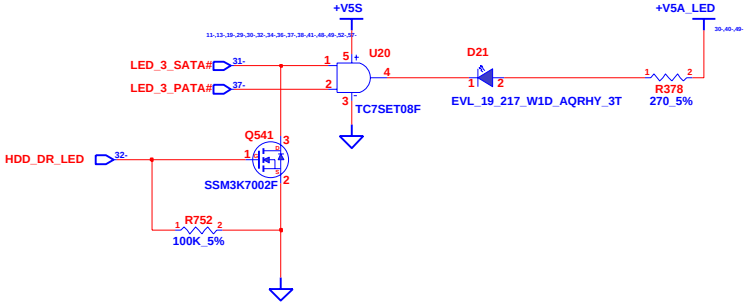

LID SWITCH

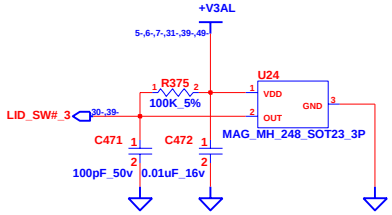

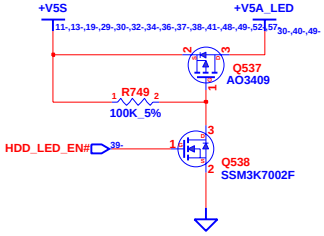

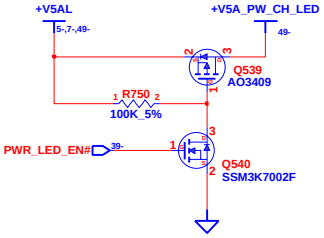

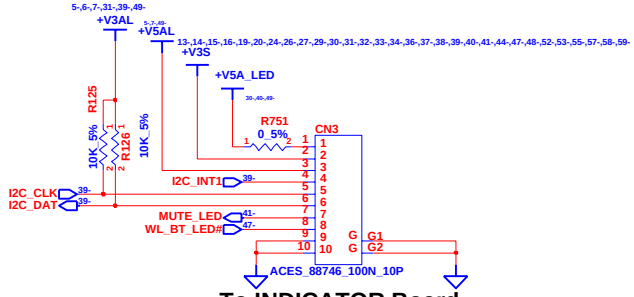

To INDICATOR Board

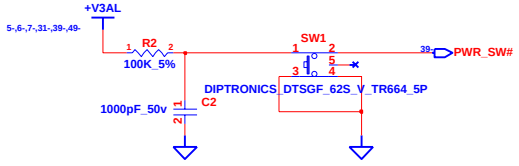

POWER BUTTON

CHANGE by	Drawer_Name	9-Oct-2007	

INVENTEC

TITLE *DIABLO BUTTON & LED*

SIZE	CODE	DOC. NUMBER	REV
A3	CS	Model_No	AX1

SHEET 49 OF 61

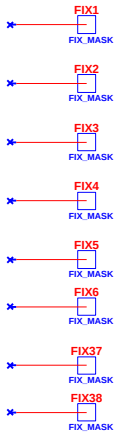

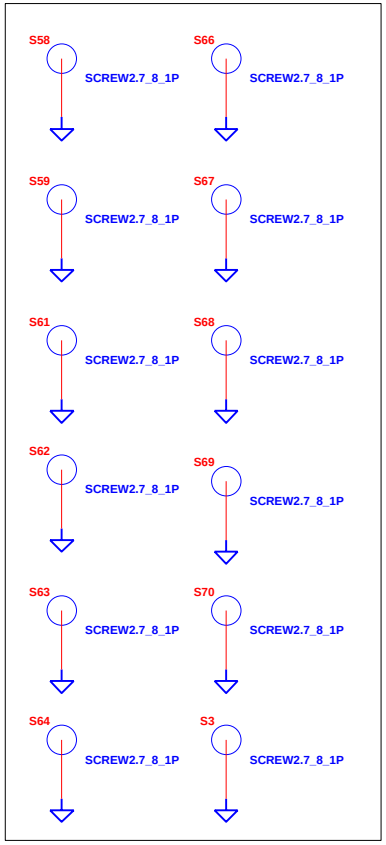

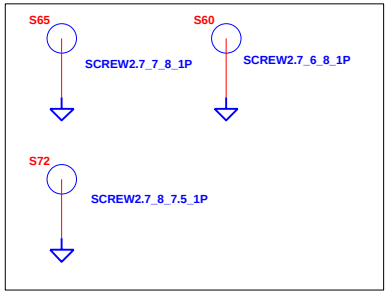

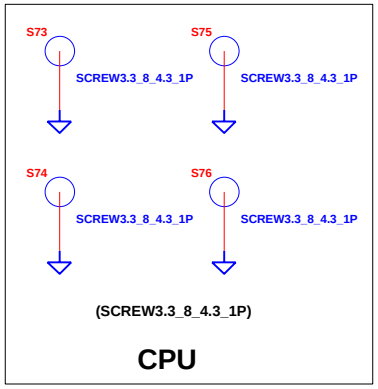

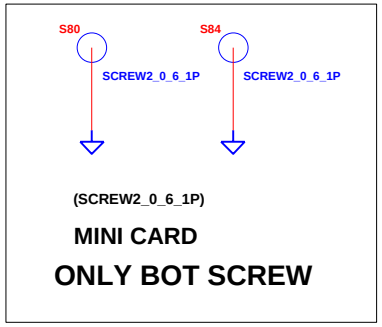

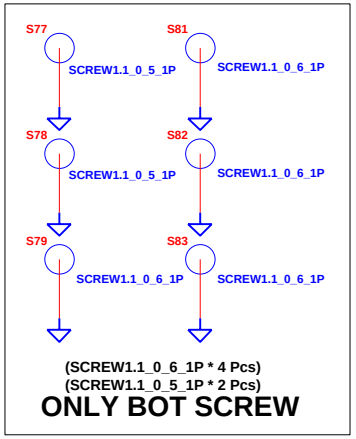

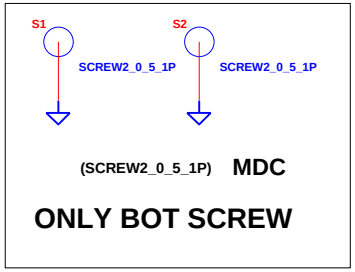

CHANGE by	Drawer_Name	9-Oct-2007	

INVENTEC

TITLE *DIABLO SCREW*

SIZE	CODE	DOC. NUMBER	REV
A3	CS	Model_No	AX1

SHEET 50 OF 61

TOUCHPAD-DISABLE BUTTOM_DB

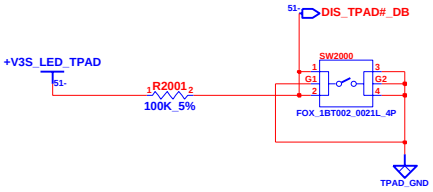

TOUCHPAD ACTIVE LED

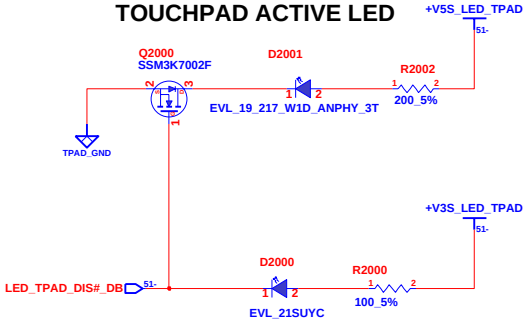

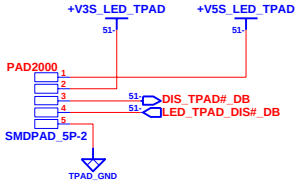

TouchPad Disable DB

CHANGE by	Drawer_Name	9-Oct-2007	

INVENTEC

TITLE *DIABLO*
FINGER PRINTER CONN.

SIZE	CODE	DOC. NUMBER	REV
A3	CS	Model_No	AX1

SHEET 51 OF 61

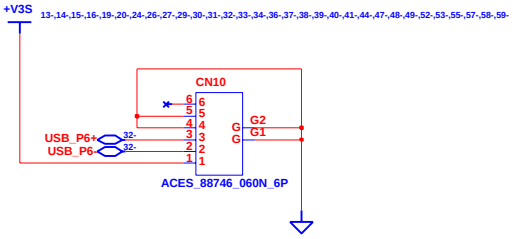

To Finger Print Reader Board

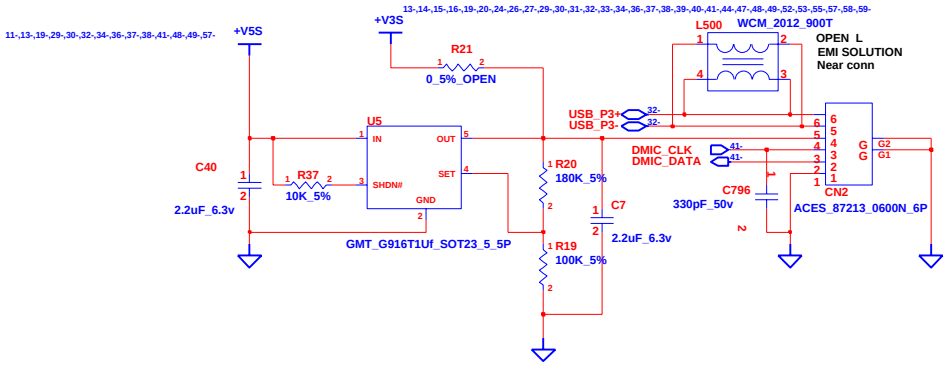

Webcam CONN & DIGITAL MIC

CHANGE by	Drawer_Name	9-Oct-2007	

INVENTEC

TITLE *DIABLO*

SIZE	CODE	DOC. NUMBER	REV
A3	CS	Model_No	AX1

SHEET 52 OF 61

Cardreader Conn

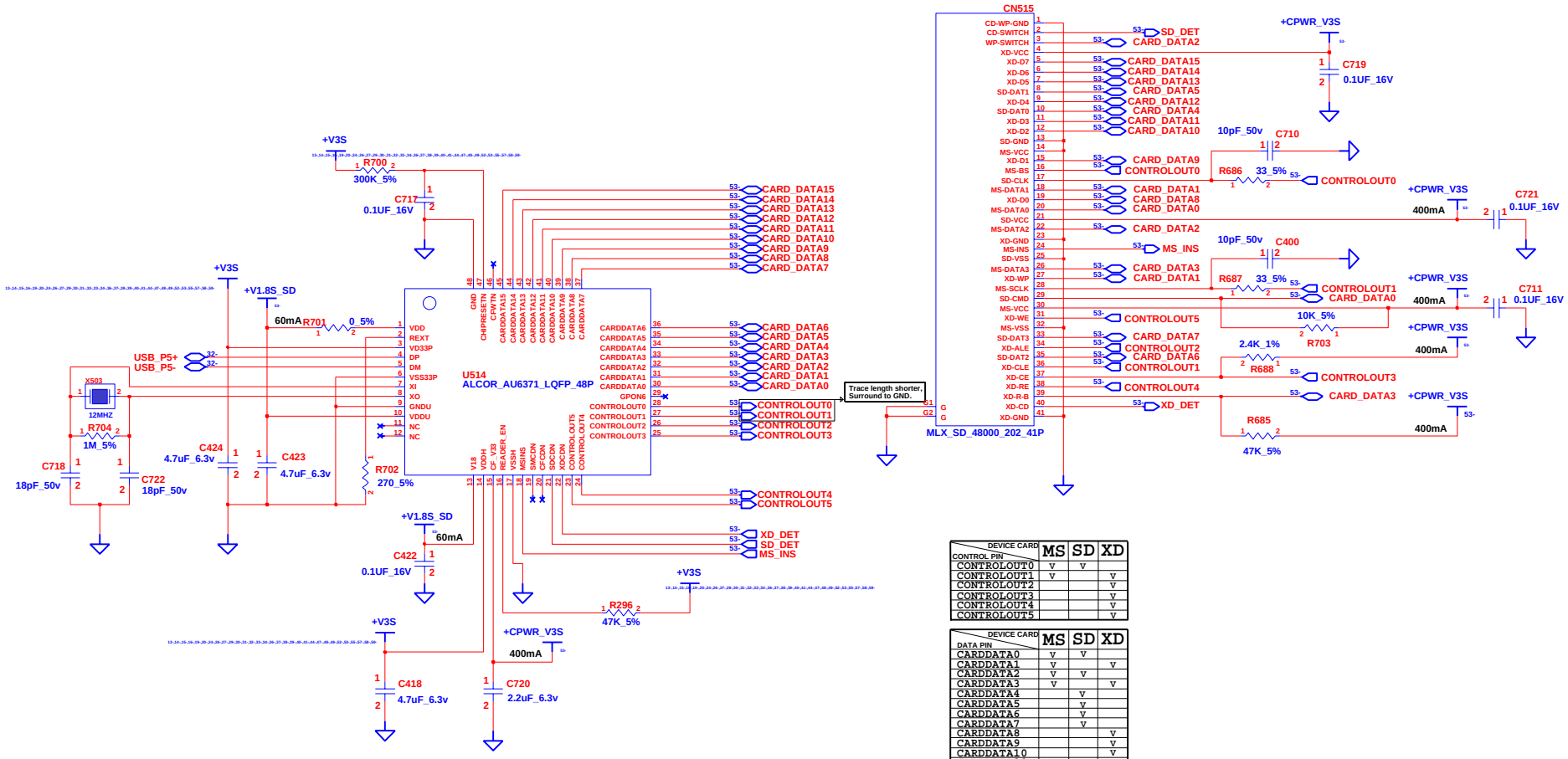

CONTROL PIN \ DEVICE CARD	MS	SD	XD
CONTROLOUT0	V	V	
CONTROLOUT1	V		V
CONTROLOUT2			V
CONTROLOUT3			V
CONTROLOUT4			V
CONTROLOUT5			V

DATA PIN \ DEVICE CARD	MS	SD	XD
CARDDATA0	V	V	
CARDDATA1	V		V
CARDDATA2	V	V	
CARDDATA3	V		V
CARDDATA4		V	
CARDDATA5		V	
CARDDATA6		V	
CARDDATA7		V	
CARDDATA8			V
CARDDATA9			V
CARDDATA10			V
CARDDATA11			V
CARDDATA12			V
CARDDATA13			V
CARDDATA14			V
CARDDATA15			V

INVENTEC

TITLE *DIABLO*
5 IN1/1394 CONN

SIZE	CODE	DOC. NUMBER	REV
A3	CS	*Model_No*	*AX1*

CHANGE by *Drawer_Name* *9-Oct-2007*

SHEET 53 OF 61

1	2	3	4	5	6	7	8

A B C D E F

CHANGE by *Drawer_Name* *9-Oct-2007*

INVENTEC

TITLE *DIABLO*
5 IN 1/1394 CONN

SIZE	CODE	DOC. NUMBER	REV
A3	CS	*Model_No*	*AX1*

SHEET 54 OF 61

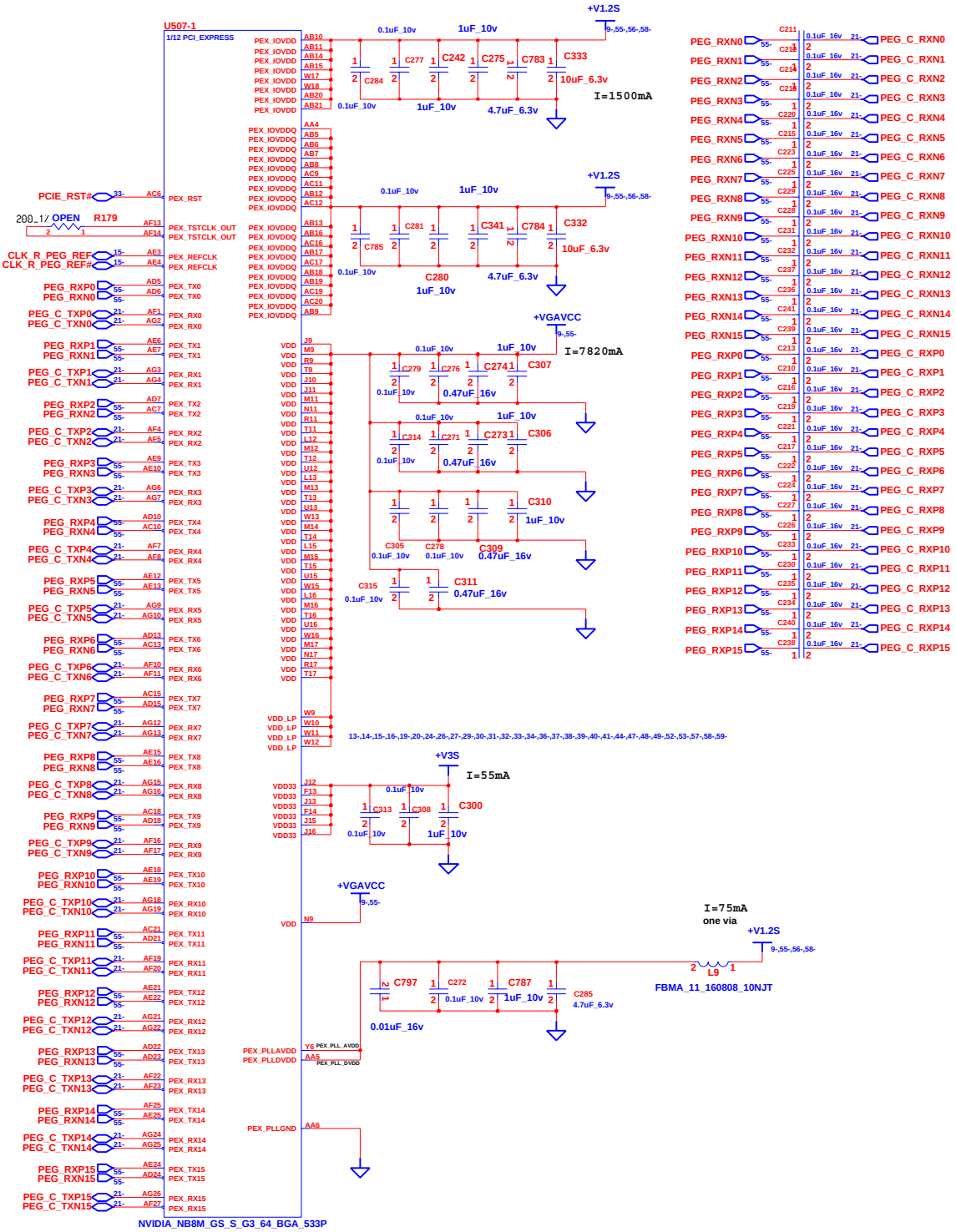

CHANGE by Drawer_Name

INVENTEC

TITLE DIABLO
nVIDIA G72M(U3)

SIZE A3 | CODE C5 | DOC NUMBER Model_No | REV AX1

SHEET 55 OF 61

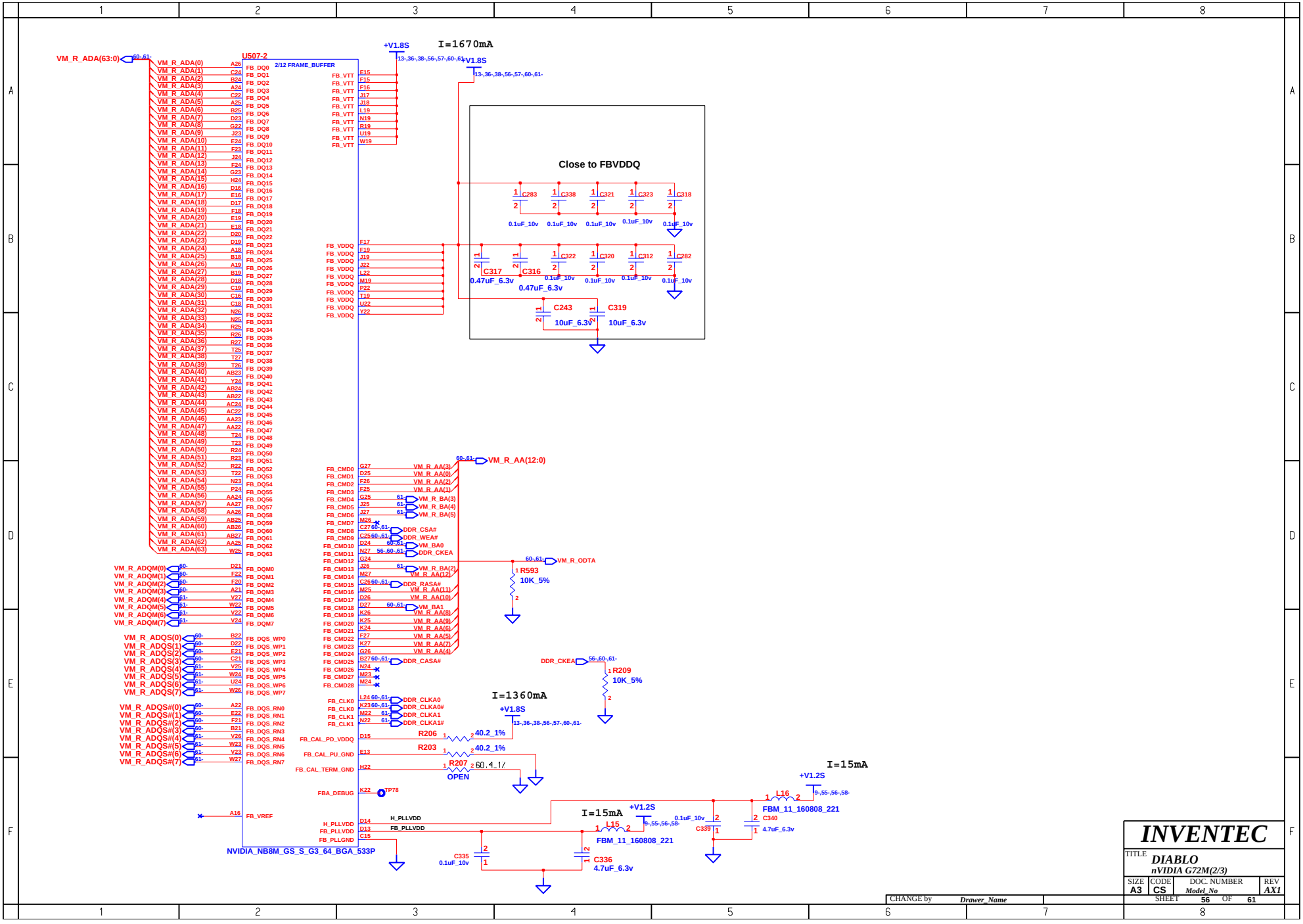
VM_R_ADA(63:0)
U007-2
2/12 FRAME_BUFFER
NVIDIA_NB8M_GS_S_G3_64_BGA_533P
+V1.8S
I=1670mA
Close to FBVDDQ
C283 C338 C321 C323 C318
0.1uF_10v
C317 C316 C322 C320 C312 C282
0.47uF_6.3v
C243 C319
10uF_6.3v
VM_R_AA(12:0)
VM_R_ODTA
R593
10K_5%
DDR_CKEA
R209
10K_5%
I=1360mA
R206 40.2_1%
R203 40.2_1%
R207 60.4_1%
OPEN
TP78
I=15mA
+V1.2S
L16
FBM_11_160808_221
C340
4.7uF_6.3v
L15
C335
C336
VM_R_ADQM(0)
VM_R_ADQS(0)
VM_R_ADQS#(0)
FB_VREF
H_PLLVDD
FB_PLLVDD
FB_PLLGND
FBA_DEBUG
FB_CAL_PD_VDDQ
FB_CAL_PU_GND
FB_CAL_TERM_GND
DDR_CSA#
DDR_WEA#
VM_BA0
DDR_CKEA
DDR_RASA#
VM_BA1
DDR_CASA#
DDR_CLKA0
DDR_CLKA0#
DDR_CLKA1
DDR_CLKA1#
INVENTEC
TITLE
DIABLO
nVIDIA G72M(2/3)
SIZE A3
CODE CS
DOC. NUMBER Model_No
REV AX1
SHEET 56 OF 61
CHANGE by Drawer_Name

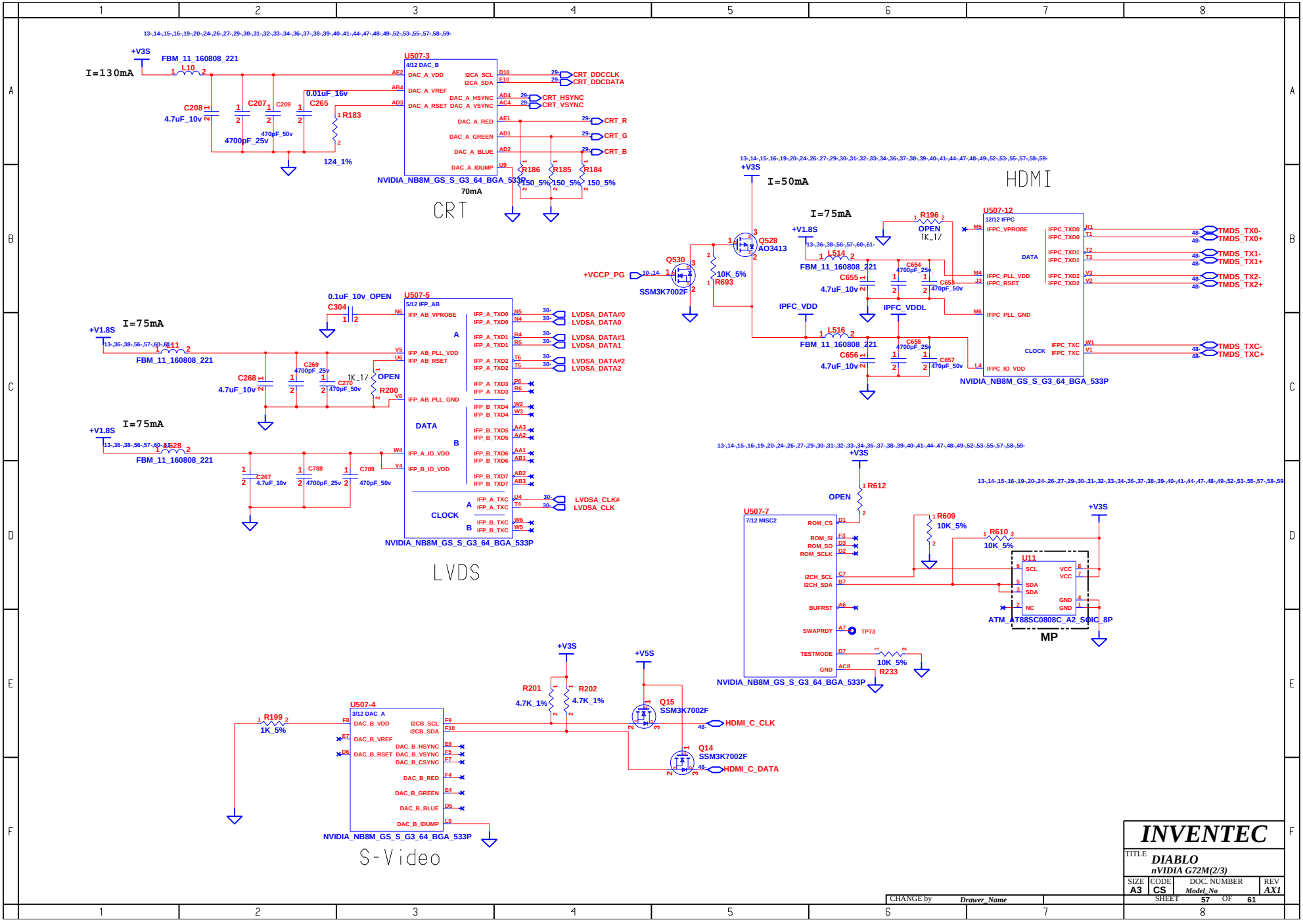
CRT
HDMI
LVDS
S-Video
MP
U507-3
4/12 DAC_B
NVIDIA_NB8M_GS_S_G3_64_BGA_533P
U507-12
12/12 IFPC
U507-5
5/12 IFP_AB
U507-7
7/12 MISC2
U507-4
3/12 DAC_A
U11
ATM_AT88SC0808C_A2_SOIC_8P
CRT_DDCCLK
CRT_DDCDATA
CRT_HSYNC
CRT_VSYNC
CRT_R
CRT_G
CRT_B
TMDS_TX0-
TMDS_TX0+
TMDS_TX1-
TMDS_TX1+
TMDS_TX2-
TMDS_TX2+
TMDS_TXC-
TMDS_TXC+
LVDSA_DATA#0
LVDSA_DATA0
LVDSA_DATA#1
LVDSA_DATA1
LVDSA_DATA#2
LVDSA_DATA2
LVDSA_CLK#
LVDSA_CLK
HDMI_C_CLK
HDMI_C_DATA
+V3S
+V1.8S
+V5S
+VCCP_PG
I=130mA
I=75mA
I=50mA
FBM_11_160808_221
SSM3K7002F
AO3413
124_1%
70mA
INVENTEC
TITLE
DIABLO
nVIDIA G72M(2/3)
SIZE A3
CODE CS
DOC. NUMBER Model_No
REV AX1
SHEET 57 OF 61
CHANGE by Drawer_Name

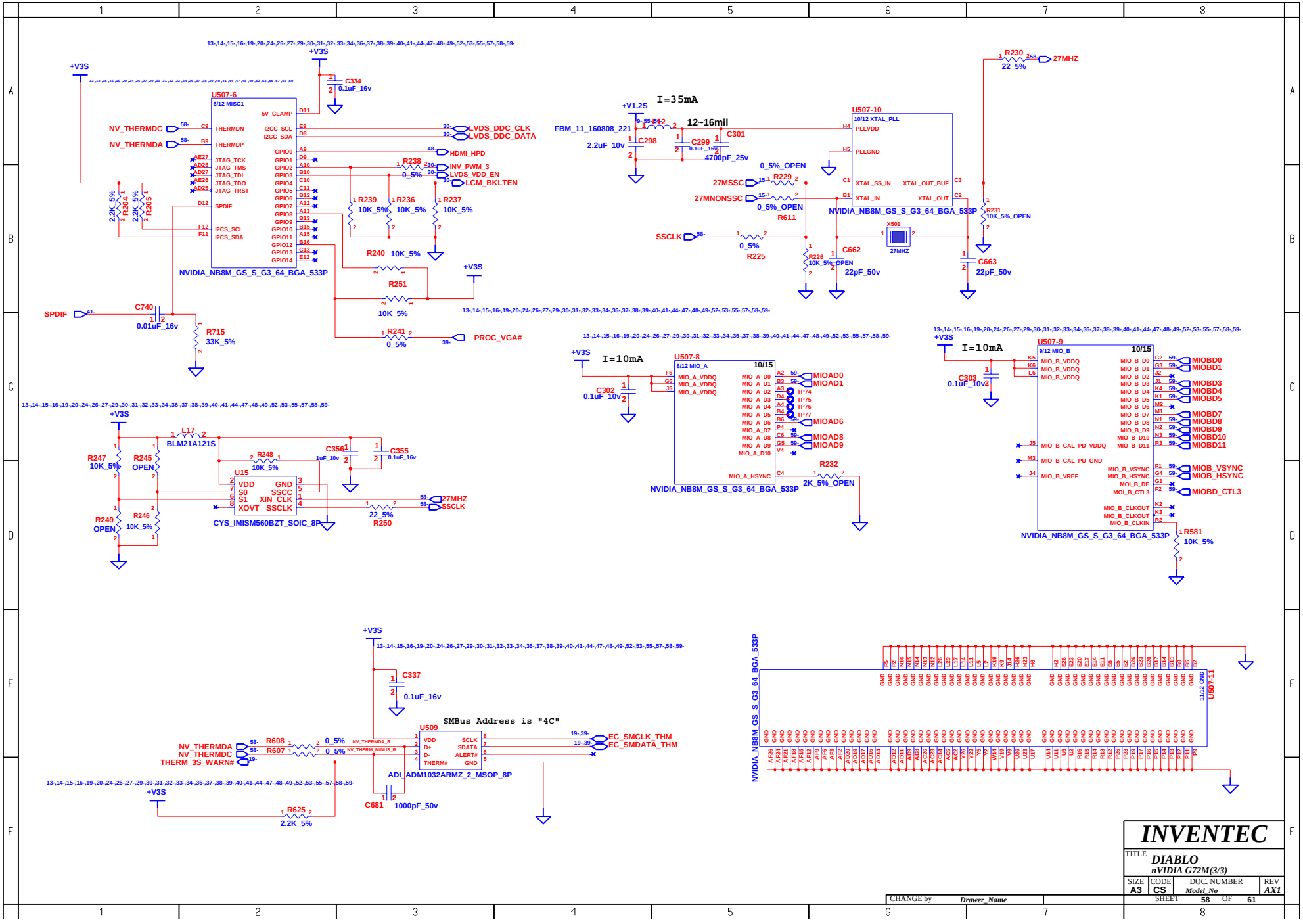
U507-6
6/12 MISC1
NVIDIA_NB8M_GS_S_G3_64_BGA_533P
NV_THERMDC
NV_THERMDA
THERMDN
THERMDP
JTAG_TCK
JTAG_TMS
JTAG_TDI
JTAG_TDO
JTAG_TRST
SPDIF
I2CS_SCL
I2CS_SDA
5V_CLAMP
I2CC_SCL
I2CC_SDA
LVDS_DDC_CLK
LVDS_DDC_DATA
HDMI_HPD
INV_PWM_3
LVDS_VDD_EN
LCM_BKLTEN
PROC_VGA#
+V3S
C334
0.1uF_16v
R204
R205
2.2K_5%
R238
0_5%
R239
R236
R237
10K_5%
R240
R251
R241
C740
0.01uF_16v
R715
33K_5%
I=35mA
+V1.2S
FBM_11_160808_221
12~16mil
C298
2.2uF_10v
C299
0.1uF_16v
C301
4700pF_25v
U507-10
10/12 XTAL_PLL
PLLVDD
PLLGND
XTAL_SS_IN
XTAL_OUT_BUF
XTAL_IN
XTAL_OUT
27MSSC
27MNONSSC
SSCLK
R229
0_5%_OPEN
R611
R225
R226
C662
22pF_50v
X501
27MHZ
R230
22_5%
R231
C663
22pF_50v
L17
BLM21A121S
R247
R245
R248
C356
C355
0.1uF_16v
U15
VDD
S0
S1
XOVT
GND
SSCC
XIN_CLK
SSCLK
CYS_IMISM560BZT_SOIC_8P
R249
R246
R250
I=10mA
U507-8
8/12 MIO_A
10/15
MIO_A_VDDQ
MIO_A_D0
MIO_A_D1
MIO_A_D2
MIO_A_D3
MIO_A_D4
MIO_A_D5
MIO_A_D6
MIO_A_D7
MIO_A_D8
MIO_A_D9
MIO_A_D10
MIO_A_HSYNC
MIOAD0
MIOAD1
MIOAD6
MIOAD8
MIOAD9
TP74
TP75
TP76
TP77
C302
R232
2K_5%_OPEN
U507-9
9/12 MIO_B
MIO_B_VDDQ
MIO_B_D0
MIO_B_D1
MIO_B_D2
MIO_B_D3
MIO_B_D4
MIO_B_D5
MIO_B_D6
MIO_B_D7
MIO_B_D8
MIO_B_D9
MIO_B_D10
MIO_B_D11
MIO_B_CAL_PD_VDDQ
MIO_B_CAL_PU_GND
MIO_B_VREF
MIO_B_VSYNC
MIO_B_HSYNC
MOI_B_DE
MOI_B_CTL3
MIO_B_CLKOUT
MIO_B_CLKIN
MIOBD0
MIOBD1
MIOBD3
MIOBD4
MIOBD5
MIOBD7
MIOBD8
MIOBD9
MIOBD10
MIOBD11
MIOB_VSYNC
MIOB_HSYNC
MIOBD_CTL3
C303
0.1uF_10v
R581
10K_5%
C337
0.1uF_16v
SMBus Address is "4C"
U509
VDD
D+
D-
THERM#
SCLK
SDATA
ALERT#
GND
ADI_ADM1032ARMZ_2_MSOP_8P
R608
R607
THERM_3S_WARN#
NV_THERMDA_R
NV_THERM_MINUS_R
EC_SMCLK_THM
EC_SMDATA_THM
C681
1000pF_50v
R625
2.2K_5%
NVIDIA_NB8M_GS_S_G3_64_BGA_533P
U507-11
11/12 GND
INVENTEC
TITLE
DIABLO
nVIDIA G72M(3/3)
SIZE A3
CODE CS
DOC. NUMBER Model_No
REV AX1
SHEET 58 OF 61
CHANGE by Drawer_Name

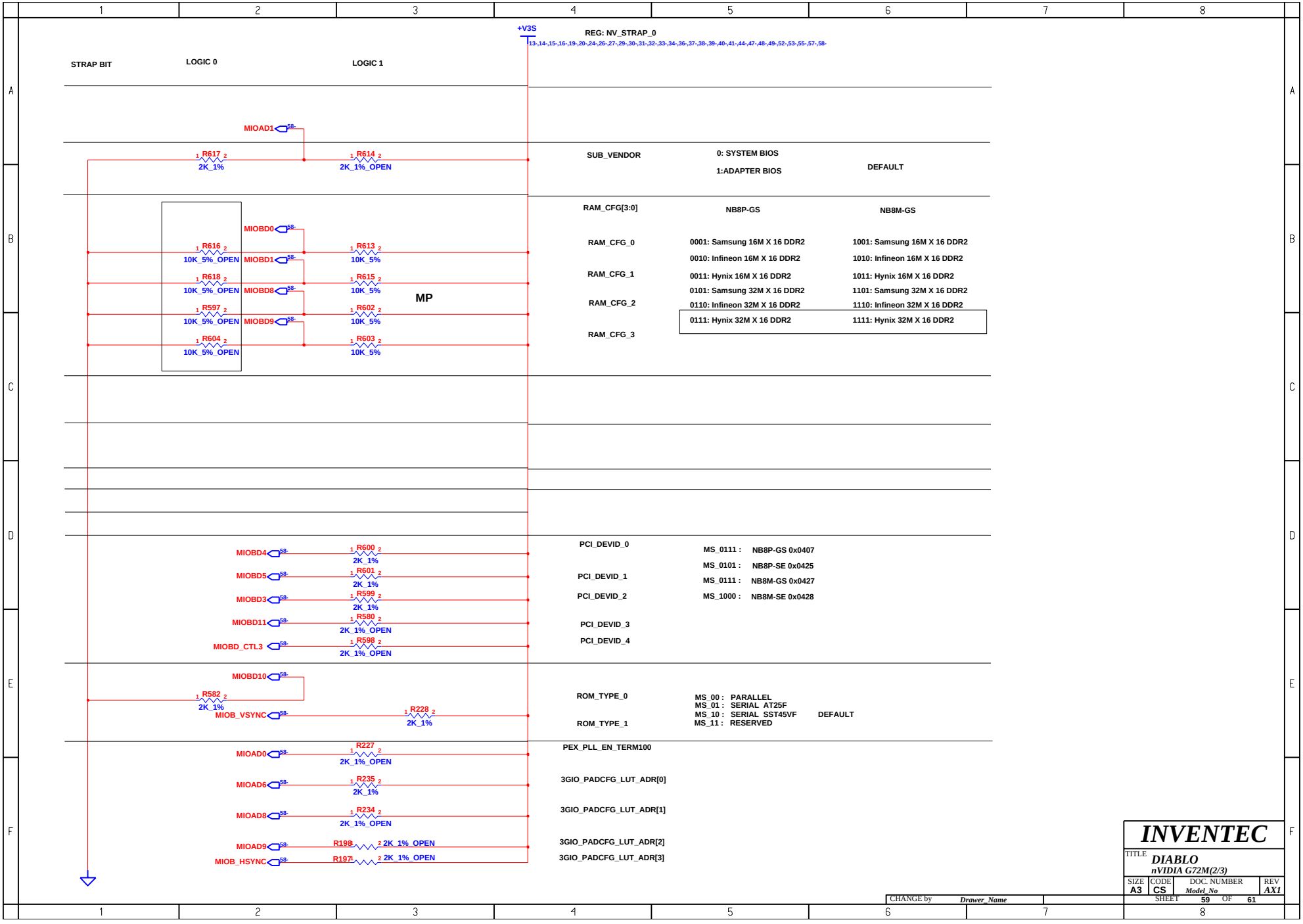
+V3S
REG: NV_STRAP_0
13-,14-,15-,16-,19-,20-,24-,26-,27-,29-,30-,31-,32-,33-,34-,36-,37-,38-,39-,40-,41-,44-,47-,48-,49-,52-,53-,55-,57-,58-
STRAP BIT
LOGIC 0
LOGIC 1
MIOAD1
R617 2K_1%
R614 2K_1%_OPEN
SUB_VENDOR
0: SYSTEM BIOS
1:ADAPTER BIOS
DEFAULT
MIOBD0
MIOBD1
MIOBD8
MIOBD9
R616 10K_5%_OPEN
R613 10K_5%
R618 10K_5%_OPEN
R615 10K_5%
R597 10K_5%_OPEN
R602 10K_5%
R604 10K_5%_OPEN
R603 10K_5%
MP
RAM_CFG[3:0]
NB8P-GS
NB8M-GS
RAM_CFG_0
RAM_CFG_1
RAM_CFG_2
RAM_CFG_3
0001: Samsung 16M X 16 DDR2
0010: Infineon 16M X 16 DDR2
0011: Hynix 16M X 16 DDR2
0101: Samsung 32M X 16 DDR2
0110: Infineon 32M X 16 DDR2
0111: Hynix 32M X 16 DDR2
1001: Samsung 16M X 16 DDR2
1010: Infineon 16M X 16 DDR2
1011: Hynix 16M X 16 DDR2
1101: Samsung 32M X 16 DDR2
1110: Infineon 32M X 16 DDR2
1111: Hynix 32M X 16 DDR2
MIOBD4
MIOBD5
MIOBD3
MIOBD11
MIOBD_CTL3
R600 2K_1%
R601 2K_1%
R599 2K_1%
R580 2K_1%_OPEN
R598 2K_1%_OPEN
PCI_DEVID_0
PCI_DEVID_1
PCI_DEVID_2
PCI_DEVID_3
PCI_DEVID_4
MS_0111 : NB8P-GS 0x0407
MS_0101 : NB8P-SE 0x0425
MS_0111 : NB8M-GS 0x0427
MS_1000 : NB8M-SE 0x0428
MIOBD10
R582 2K_1%
MIOB_VSYNC
R228 2K_1%
ROM_TYPE_0
ROM_TYPE_1
MS_00 : PARALLEL
MS_01 : SERIAL AT25F
MS_10 : SERIAL SST45VF
MS_11 : RESERVED
DEFAULT
MIOAD0
MIOAD6
MIOAD8
MIOAD9
MIOB_HSYNC
R227 2K_1%_OPEN
R235 2K_1%
R234 2K_1%_OPEN
R198 2K_1%_OPEN
R197 2K_1%_OPEN
PEX_PLL_EN_TERM100
3GIO_PADCFG_LUT_ADR[0]
3GIO_PADCFG_LUT_ADR[1]
3GIO_PADCFG_LUT_ADR[2]
3GIO_PADCFG_LUT_ADR[3]
INVENTEC
TITLE
DIABLO
nVIDIA G72M(2/3)
SIZE A3
CODE CS
DOC. NUMBER Model_No
REV AX1
SHEET 59 OF 61
CHANGE by Drawer_Name

P/N:6019B329301

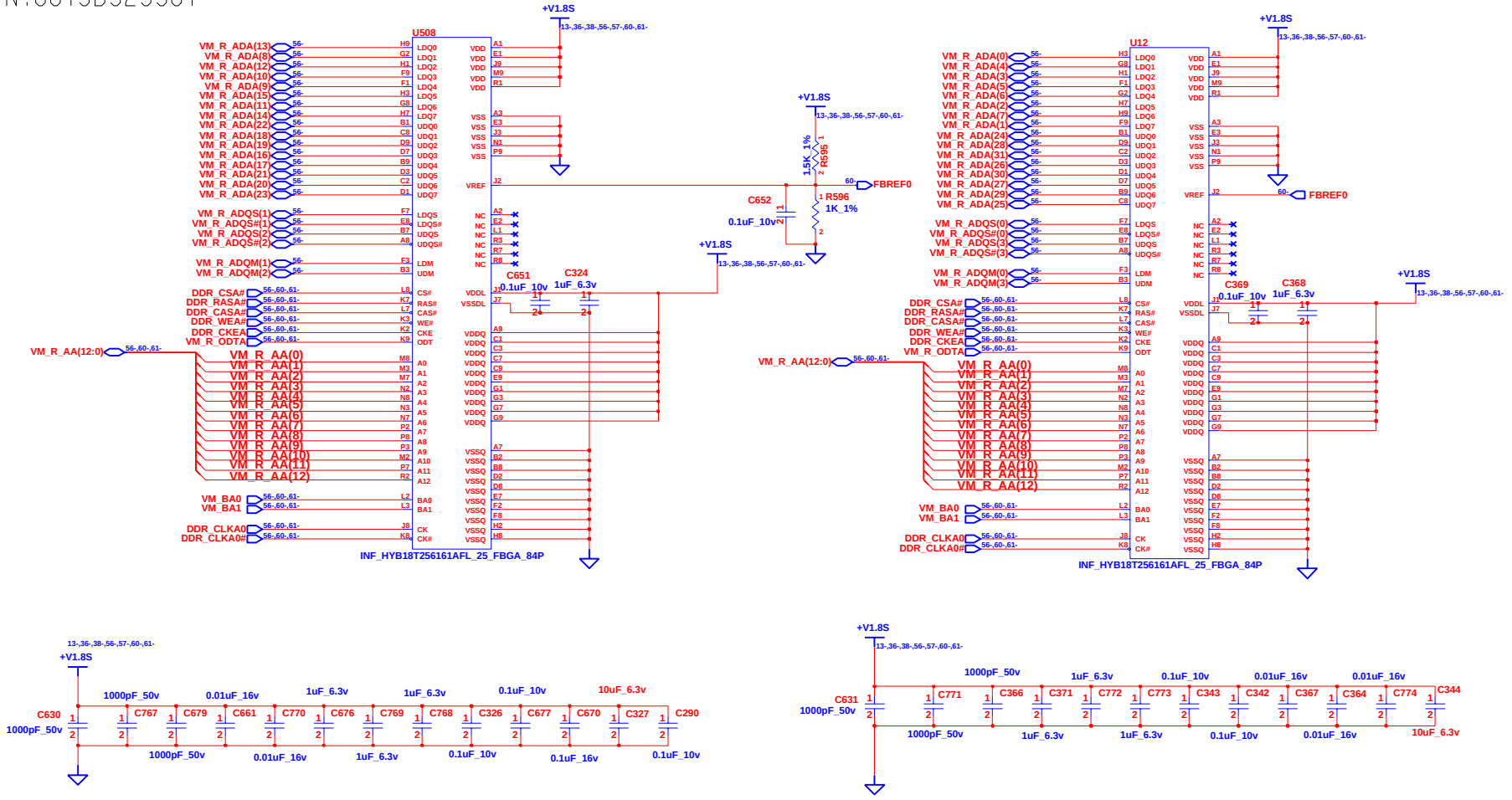

INVENTEC			
TITLE	DIABLO VRAM(1/4)		
SIZE A3	CODE CS	DOC. NUMBER Model_No	REV AX1
CHANGE by Drawer_Name		SHEET 60 OF 61	

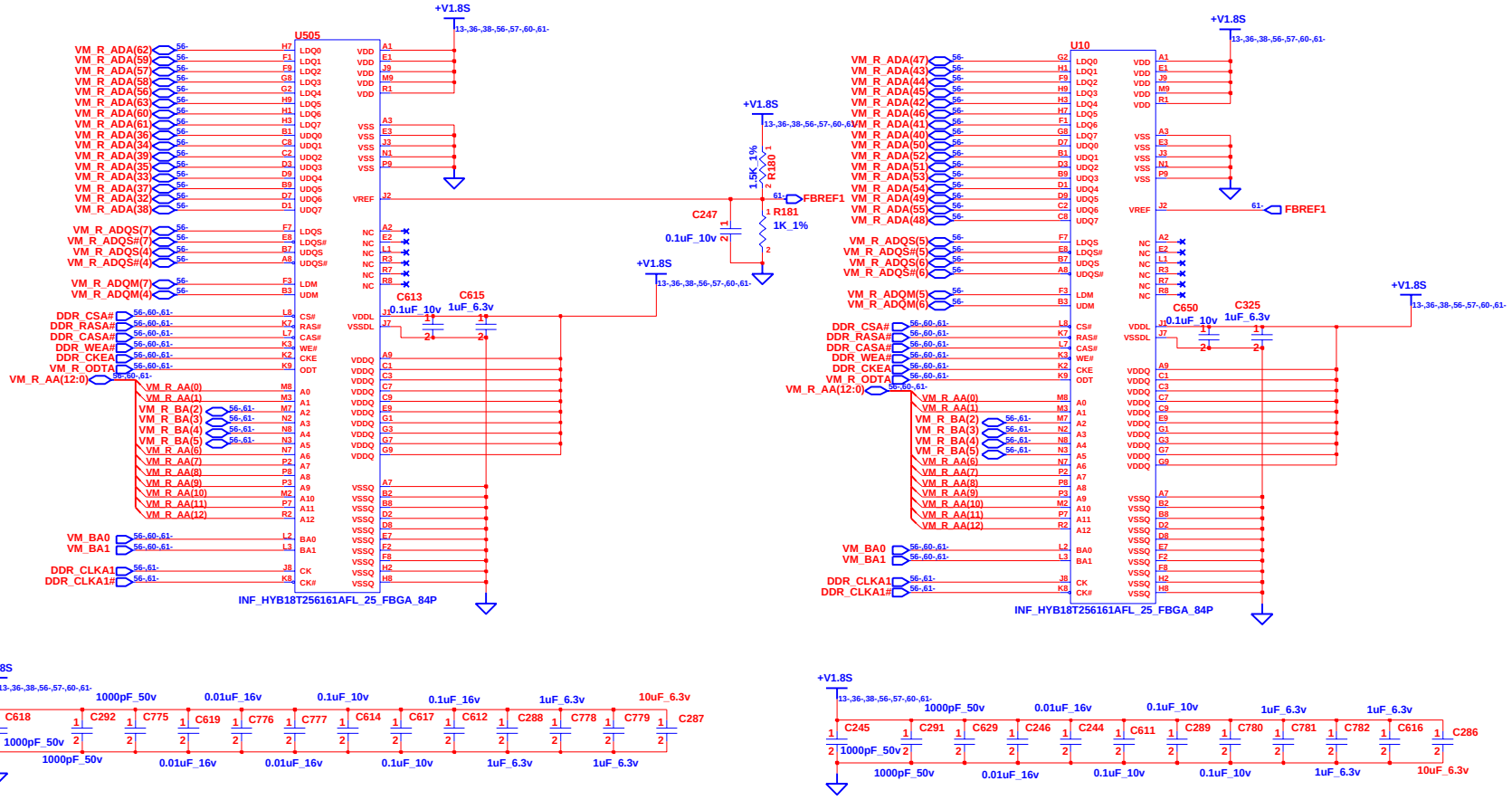

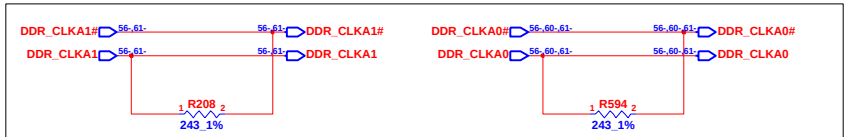

Layou Note: Put these resisters close to the V-RAM.

INVENTEC			
TITLE DIABLO VRAM(2/4)			
SIZE A3	CODE CS	DOC. NUMBER Model_No	REV AX1
CHANGE by Drawer_Name		SHEET 61 OF 61	