zzz

PCB

Compal Confidential

NDWG0 Schematics Document

AMD S1g3/ RS880M/ SB710

2009 / 09 / 22

LA-5991P

Rev:0.1

CONFIDENTIAL

Security Classification	Compal Secret Data			Compal Electronics, Inc.
Issued Date	2009/09/11	Deciphered Date	2010/03/12	Title: SCHEMATIC,MB A5991
				Size: Custom / Document Number: 401830 / Rev: A
				Date: Tuesday, October 13, 2009 / Sheet 1 of 47

THIS SHEET OF ENGINEERING DRAWING IS THE PROPRIETARY PROPERTY OF COMPAL ELECTRONICS, INC. AND CONTAINS CONFIDENTIAL AND TRADE SECRET INFORMATION. THIS SHEET MAY NOT BE TRANSFERED FROM THE CUSTODY OF THE COMPETENT DIVISION OF R&D DEPARTMENT EXCEPT AS AUTHORIZED BY COMPAL ELECTRONICS, INC. NEITHER THIS SHEET NOR THE INFORMATION IT CONTAINS MAY BE USED BY OR DISCLOSED TO ANY THIRD PARTY WITHOUT PRIOR WRITTEN CONSENT OF COMPAL ELECTRONICS, INC.

http://laptop-motherboard-schematic.blogspot.com/

Compal confidential

Project Code: NDWG0/H0

File Name : LA-5991P

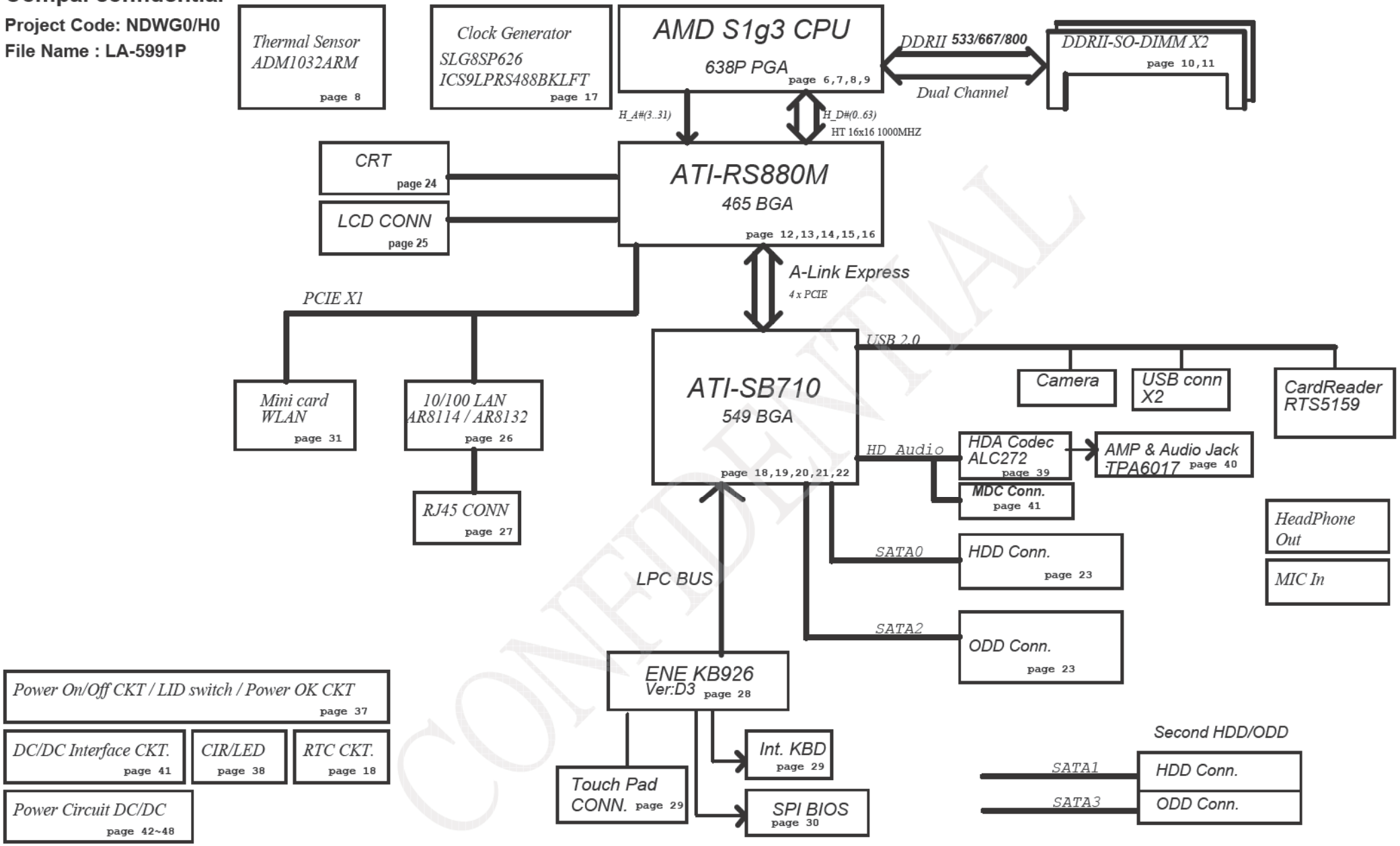

Security Classification	Compal Secret Data		
Issued Date	2009/09/11	Deciphered Date	2010/03/12

THIS SHEET OF ENGINEERING DRAWING IS THE PROPRIETARY PROPERTY OF COMPAL ELECTRONICS, INC. AND CONTAINS CONFIDENTIAL AND TRADE SECRET INFORMATION. THIS SHEET MAY NOT BE TRANSFERED FROM THE CUSTODY OF THE COMPETENT DIVISION OF R&D DEPARTMENT EXCEPT AS AUTHORIZED BY COMPAL ELECTRONICS, INC. NEITHER THIS SHEET NOR THE INFORMATION IT CONTAINS MAY BE USED BY OR DISCLOSED TO ANY THIRD PARTY WITHOUT PRIOR WRITTEN CONSENT OF COMPAL ELECTRONICS, INC.

Compal Electronics, Inc.

Title: SCHEMATIC,MB A5991

Size: Custom | Document Number: 401830 | Rev: A

Date: Tuesday, October 13, 2009 | Sheet 2 of 47

http://laptop-motherboard-schematic.blogspot.com/

Voltage Rails

VIN	Adapter power supply (19V)			
B+	AC or battery power rail for power circuit.			
+CPU_CORE	Core voltage for CPU			
+0.9V	0.9V switched power rail for DDR terminator			
+1.2V_HT	1.2V switched power rail	ON	OFF	
+1.5VS	1.5V switched power rail	ON	OFF	OFF
+1.8V	1.8V power rail for DDR	ON		ON*
+1.8VS	1.8V switched power rail		OFF	
+2.5VS	2.5V switched power rail	ON	OFF	OFF
+3VALW	3.3V always on power rail	ON	ON	ON*
+3VS	3.3V switched power rail	ON	OFF	OFF
+5VALW	5V always on power rail	ON	ON	ON*
+5VS	5V switched power rail	ON	OFF	OFF
+VSB	VSB always on power rail	ON	ON	ON*
+RTCVCC	RTC power	ON	ON	ON

STATE \ SIGNAL	SLP_S1#	SLP_S3#	SLP_S4#	SLP_S5#	+VALW	+V	+VS	Clock
Full ON	HIGH	HIGH	HIGH	HIGH	ON	ON	ON	ON
S1 (Power On Suspend)	LOW	HIGH	HIGH	HIGH	ON	ON	ON	LOW
S3 (Suspend to RAM)	LOW	LOW	HIGH	HIGH	ON	ON	OFF	OFF
S4 (Suspend to Disk)	LOW	LOW	LOW	HIGH	ON	OFF	OFF	OFF
S5 (Soft OFF)	LOW	LOW	LOW	LOW	ON	OFF	OFF	OFF

Board ID / SKU ID Table for AD channel

Vcc	3.3V +/- 5%
Ra/Rc/Re	100K +/- 5%

Board ID	Rb / Rd / Rf	V_{AD_BID} min	V_{AD_BID} typ	V_{AD_BID} max
0	0	0 V	0 V	0 V
1	8.2K +/- 5%	0.216 V	0.250 V	0.289 V
2	18K +/- 5%	0.436 V	0.503 V	0.538 V
3	33K +/- 5%	0.712 V	0.819 V	0.875 V
4	56K +/- 5%	1.036 V	1.185 V	1.264 V
5	100K +/- 5%	1.453 V	1.650 V	1.759 V
6	200K +/- 5%	1.935 V	2.200 V	2.341 V
7	NC	2.500 V	3.300 V	3.300 V

External PCI Devices

Device	IDSEL#	REQ#/GNT#	Interrupts

BOARD ID Table

Board ID	PCB Revision
0	No Support VaryBright
1	
2	
3	Support VaryBright
4	
5	
6	
7	

BTO Option Table

BTO Item	BOM Structure
10/100 Lan	8114@
GIGA Lan	8132@
17" ID	17@
15" ID	15@
Support VaryBright	VARY@

EC SM Bus1 address

Device	Address
Smart Battery	0001 011X b

EC SM Bus2 address

Device	Address
ADM1032	1001 100X b

PROJECT ID Table

SKU ID	SKU
0	NCWG0
1	
2	
3	NAL00
4	
5	
6	
7	NCWH0

SB600 SM Bus 1 address

Device	Address
Clock Generator	1101 001Xb
DDR DIMM0	1001 000Xb
DDR DIMM2	1001 010Xb
Wireless Lan	

SB600 SM Bus 2 address

Device	Address
New Card	

CONFIDENTIAL

Security Classification	Compal Secret Data		Compal Electronics, Inc.
Issued Date	2009/09/11	Deciphered Date	2010/03/12
Title	SCHEMATIC,MB A5991		
Size Custom	Document Number 401830		Rev A
Date: Tuesday, October 13, 2009	Sheet 3 of 47		

THIS SHEET OF ENGINEERING DRAWING IS THE PROPRIETARY PROPERTY OF COMPAL ELECTRONICS, INC. AND CONTAINS CONFIDENTIAL AND TRADE SECRET INFORMATION. THIS SHEET MAY NOT BE TRANSFERED FROM THE CUSTODY OF THE COMPETENT DIVISION OF R&D DEPARTMENT EXCEPT AS AUTHORIZED BY COMPAL ELECTRONICS, INC. NEITHER THIS SHEET NOR THE INFORMATION IT CONTAINS MAY BE USED BY OR DISCLOSED TO ANY THIRD PARTY WITHOUT PRIOR WRITTEN CONSENT OF COMPAL ELECTRONICS, INC.

http://laptop-motherboard-schematic.blogspot.com/

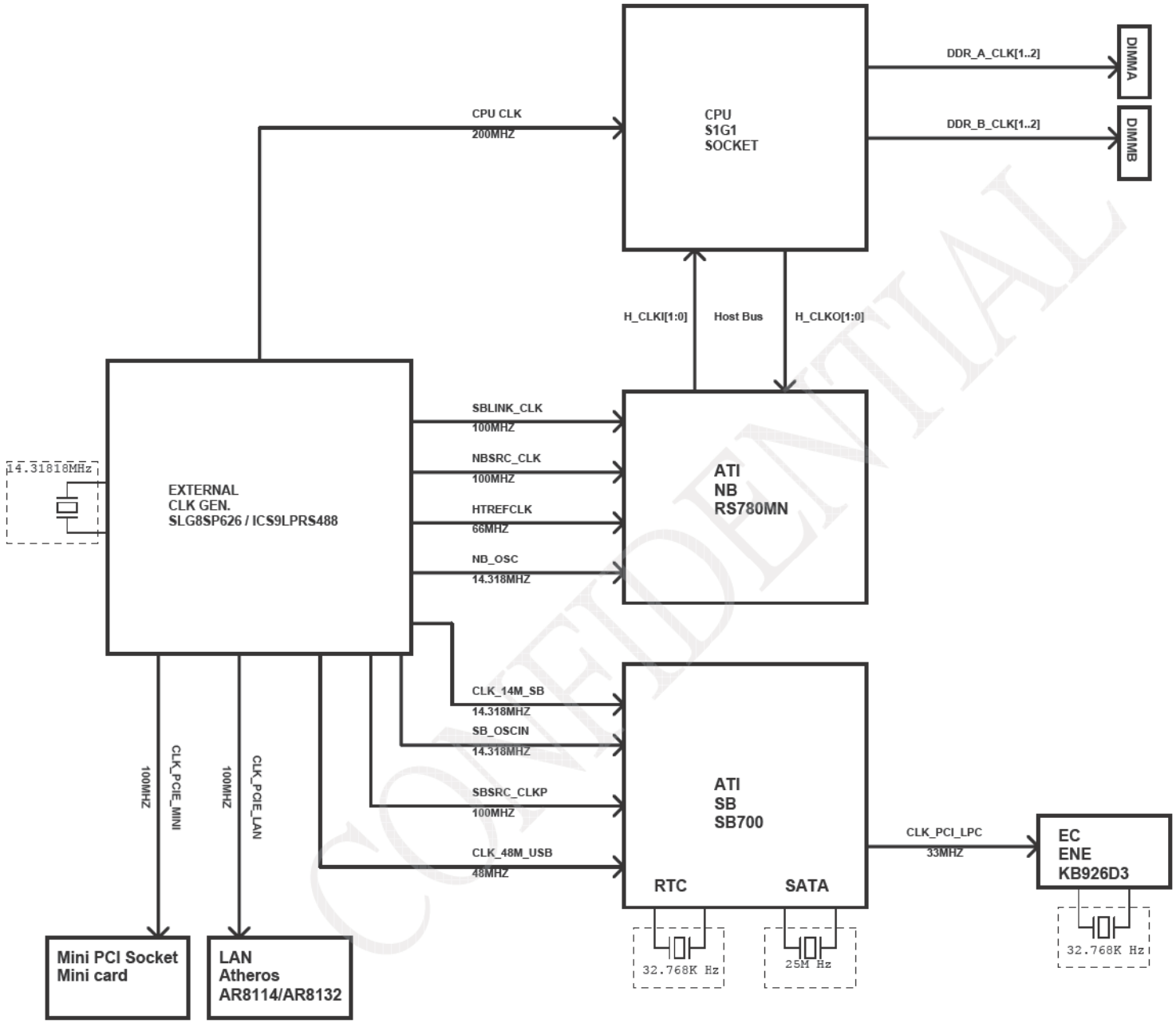

CONFIDENTIAL

Security Classification	Compal Secret Data		
Issued Date	2009/09/11	Deciphered Date	2010/03/12

THIS SHEET OF ENGINEERING DRAWING IS THE PROPRIETARY PROPERTY OF COMPAL ELECTRONICS, INC. AND CONTAINS CONFIDENTIAL AND TRADE SECRET INFORMATION. THIS SHEET MAY NOT BE TRANSFERED FROM THE CUSTODY OF THE COMPETENT DIVISION OF R&D DEPARTMENT EXCEPT AS AUTHORIZED BY COMPAL ELECTRONICS, INC. NEITHER THIS SHEET NOR THE INFORMATION IT CONTAINS MAY BE USED BY OR DISCLOSED TO ANY THIRD PARTY WITHOUT PRIOR WRITTEN CONSENT OF COMPAL ELECTRONICS, INC.

Compal Electronics, Inc.

Title: SCHEMATIC,MB A5991

Size: Custom | Document Number: 401830 | Rev: A

Date: Wednesday, October 14, 2009 | Sheet 4 of 47

http://laptop-motherboard-schematic.blogspot.com/

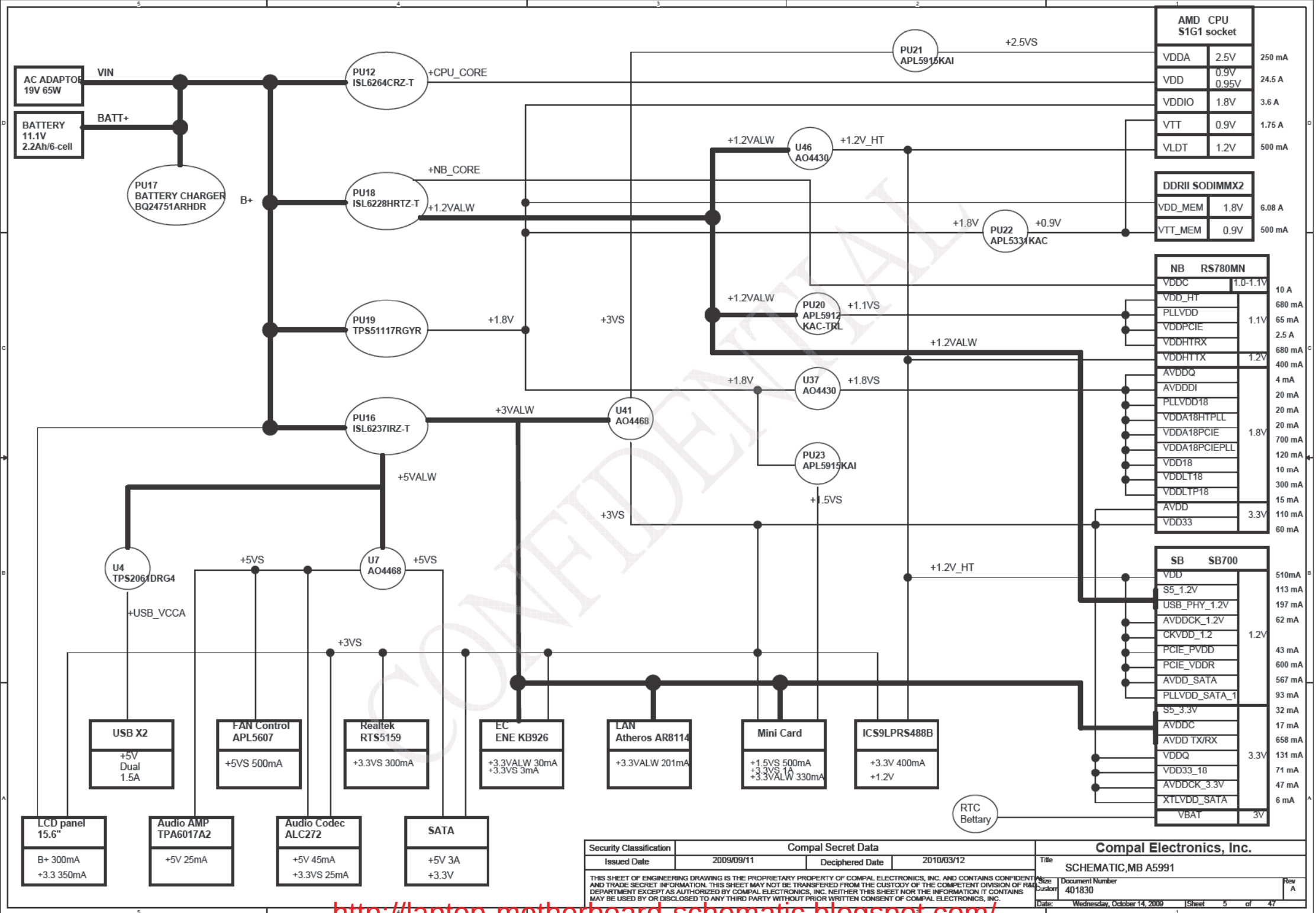

Security Classification	Compal Secret Data		
Issued Date	2009/09/11	Deciphered Date	2010/03/12

THIS SHEET OF ENGINEERING DRAWING IS THE PROPRIETARY PROPERTY OF COMPAL ELECTRONICS, INC. AND CONTAINS CONFIDENTIAL AND TRADE SECRET INFORMATION. THIS SHEET MAY NOT BE TRANSFERED FROM THE CUSTODY OF THE COMPETENT DIVISION OF R&D DEPARTMENT EXCEPT AS AUTHORIZED BY COMPAL ELECTRONICS, INC. NEITHER THIS SHEET NOR THE INFORMATION IT CONTAINS MAY BE USED BY OR DISCLOSED TO ANY THIRD PARTY WITHOUT PRIOR WRITTEN CONSENT OF COMPAL ELECTRONICS, INC.

Compal Electronics, Inc.

Title: SCHEMATIC,MB A5991

Size: Custom | Document Number: 401830 | Rev: A

Date: Wednesday, October 14, 2009 | Sheet 5 of 47

http://laptop-motherboard-schematic.blogspot.com/

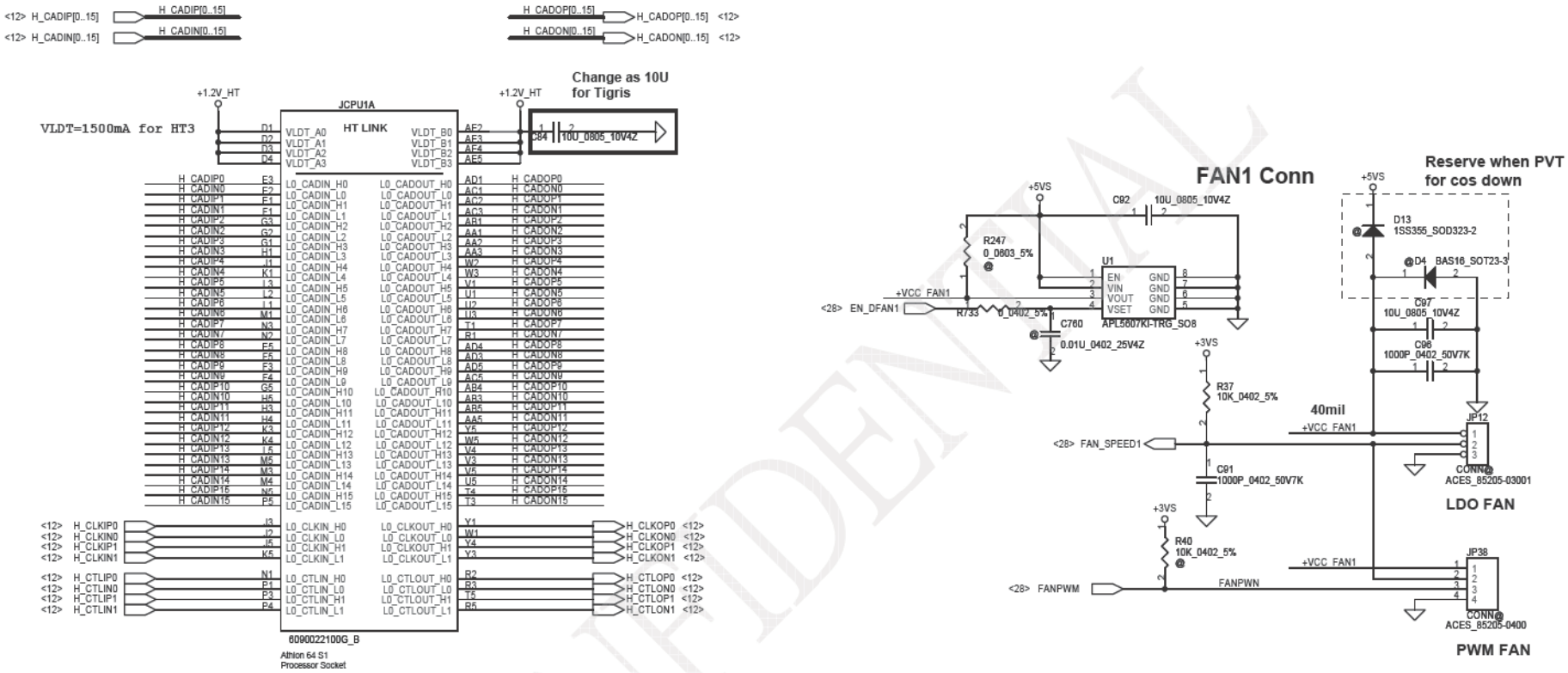

Security Classification	Compal Secret Data		
Issued Date	2009/09/11	Deciphered Date	2010/03/12

Compal Electronics, Inc.

Title: SCHEMATIC,MB A5991

Size: A3 | Document Number: 401830 | Rev: A

Date: Tuesday, October 13, 2009 | Sheet 6 of 47

THIS SHEET OF ENGINEERING DRAWING IS THE PROPRIETARY PROPERTY OF COMPAL ELECTRONICS, INC. AND CONTAINS CONFIDENTIAL AND TRADE SECRET INFORMATION. THIS SHEET MAY NOT BE TRANSFERED FROM THE CUSTODY OF THE COMPETENT DIVISION OF R&D DEPARTMENT EXCEPT AS AUTHORIZED BY COMPAL ELECTRONICS, INC. NEITHER THIS SHEET NOR THE INFORMATION IT CONTAINS MAY BE USED BY OR DISCLOSED TO ANY THIRD PARTY WITHOUT PRIOR WRITTEN CONSENT OF COMPAL ELECTRONICS, INC.

http://laptop-motherboard-schematic.blogspot.com/

Processor DDR2 Memory Interface

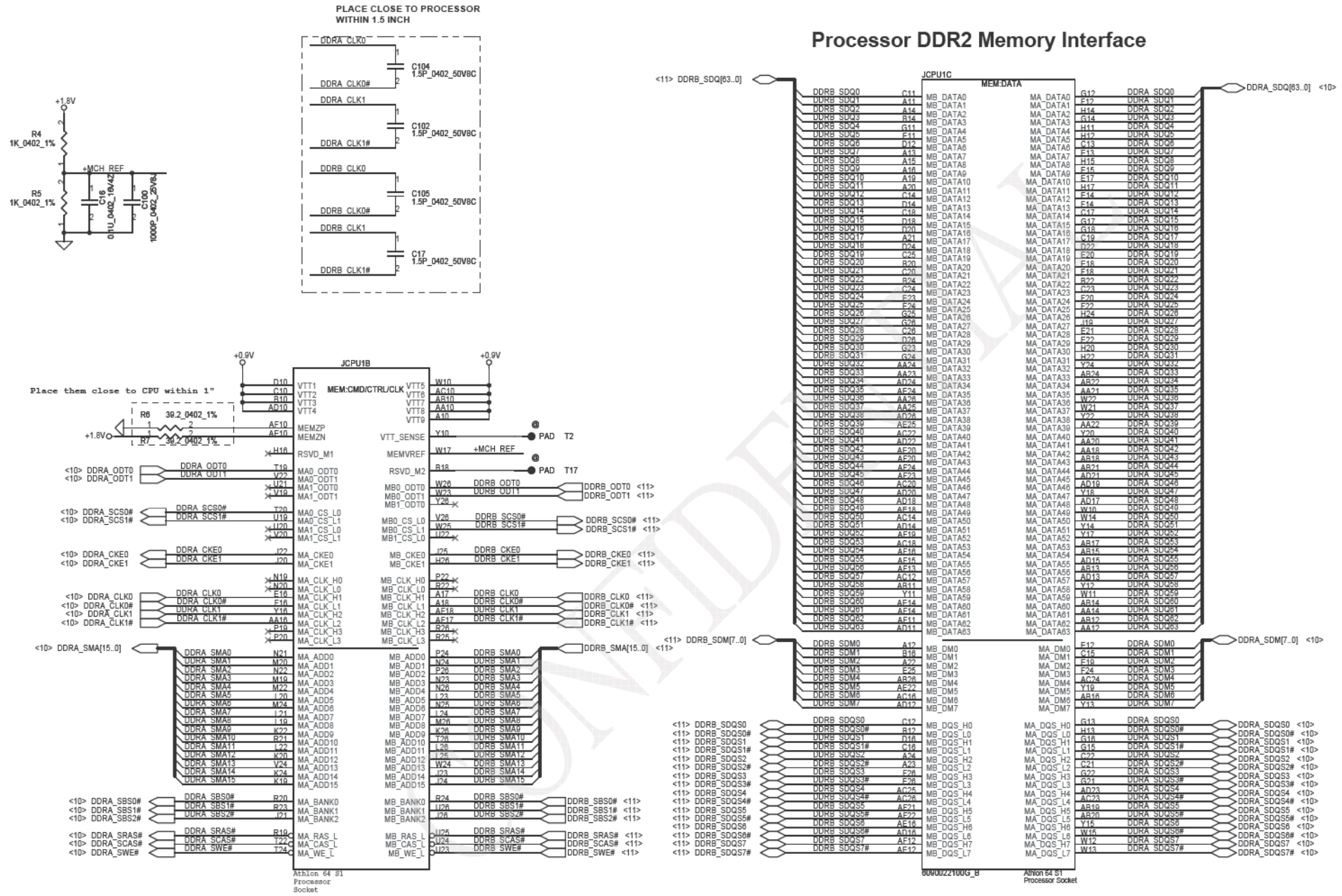

Security Classification	Compal Secret Data		
Issued Date	2009/09/11	Deciphered Date	2010/03/12

THIS SHEET OF ENGINEERING DRAWING IS THE PROPRIETARY PROPERTY OF COMPAL ELECTRONICS, INC. AND CONTAINS CONFIDENTIAL AND TRADE SECRET INFORMATION. THIS SHEET MAY NOT BE TRANSFERED FROM THE CUSTODY OF THE COMPETENT DIVISION OF R&D DEPARTMENT EXCEPT AS AUTHORIZED BY COMPAL ELECTRONICS, INC. NEITHER THIS SHEET NOR THE INFORMATION IT CONTAINS MAY BE USED BY OR DISCLOSED TO ANY THIRD PARTY WITHOUT PRIOR WRITTEN CONSENT OF COMPAL ELECTRONICS, INC.

Compal Electronics, Inc.

Title: SCHEMATIC,MB A5991

Size: A | Document Number: 401830 | Rev: A

Date: Tuesday, October 13, 2009 | Sheet 7 of 47

http://laptop-motherboard-schematic.blogspot.com/

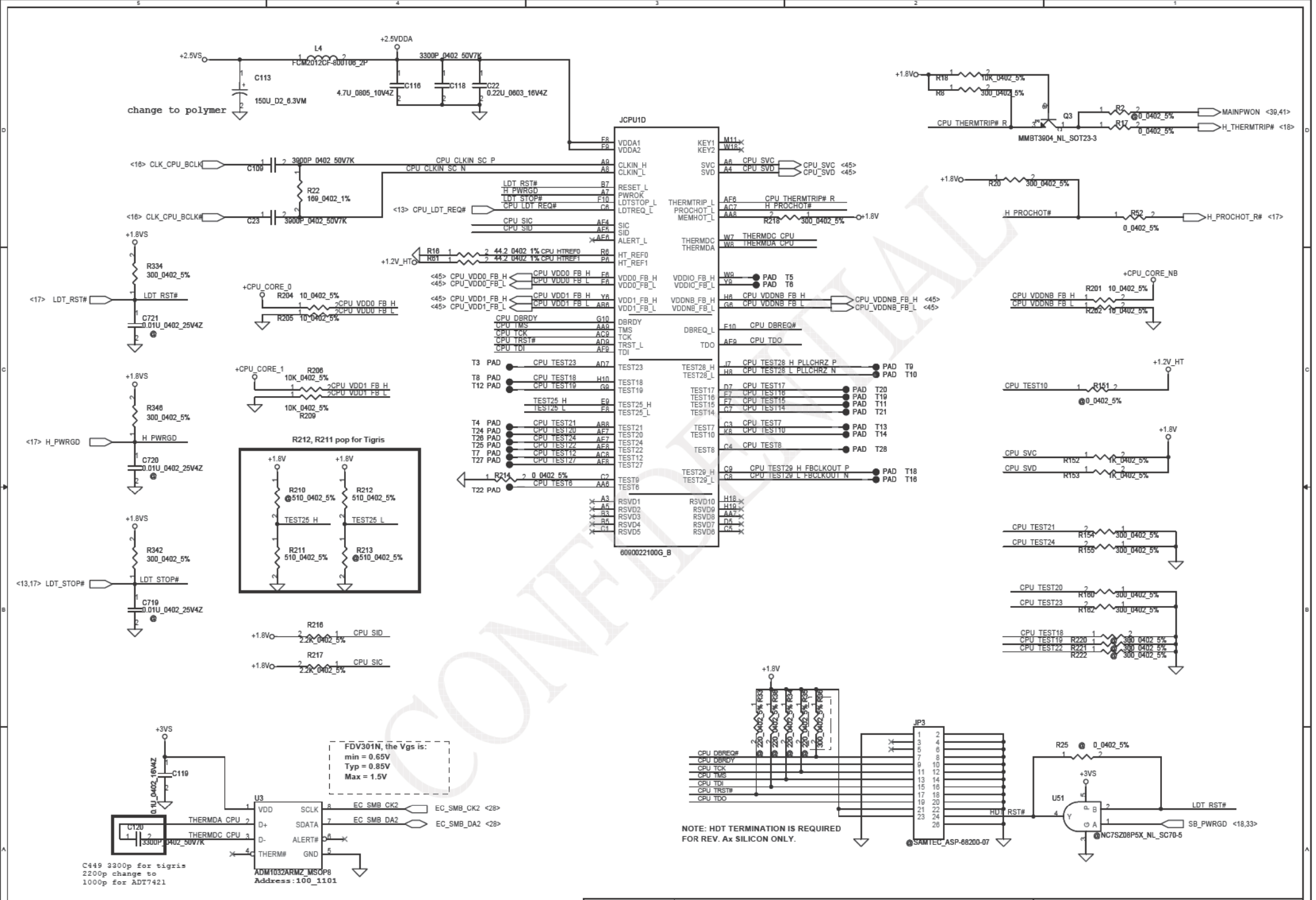

Security Classification	Compal Secret Data		
Issued Date	2009/09/11	Deciphered Date	2010/03/12

Title: SCHEMATIC,MB A5991

Compal Electronics, Inc.

Size: Custom | Document Number: 401830 | Rev: A

Date: Tuesday, October 13, 2009 | Sheet 8 of 47

THIS SHEET OF ENGINEERING DRAWING IS THE PROPRIETARY PROPERTY OF COMPAL ELECTRONICS, INC. AND CONTAINS CONFIDENTIAL AND TRADE SECRET INFORMATION. THIS SHEET MAY NOT BE TRANSFERED FROM THE CUSTODY OF THE COMPETENT DIVISION OF R&D DEPARTMENT EXCEPT AS AUTHORIZED BY COMPAL ELECTRONICS, INC. NEITHER THIS SHEET NOR THE INFORMATION IT CONTAINS MAY BE USED BY OR DISCLOSED TO ANY THIRD PARTY WITHOUT PRIOR WRITTEN CONSENT OF COMPAL ELECTRONICS, INC.

CONFIDENTIAL

http://laptop-motherboard-schematic.blogspot.com/

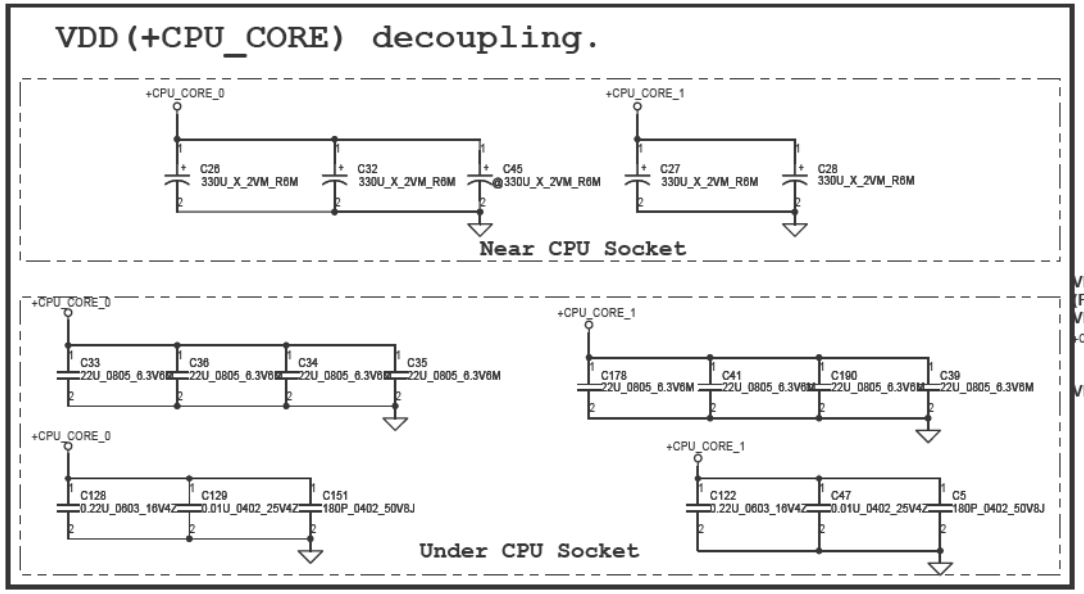

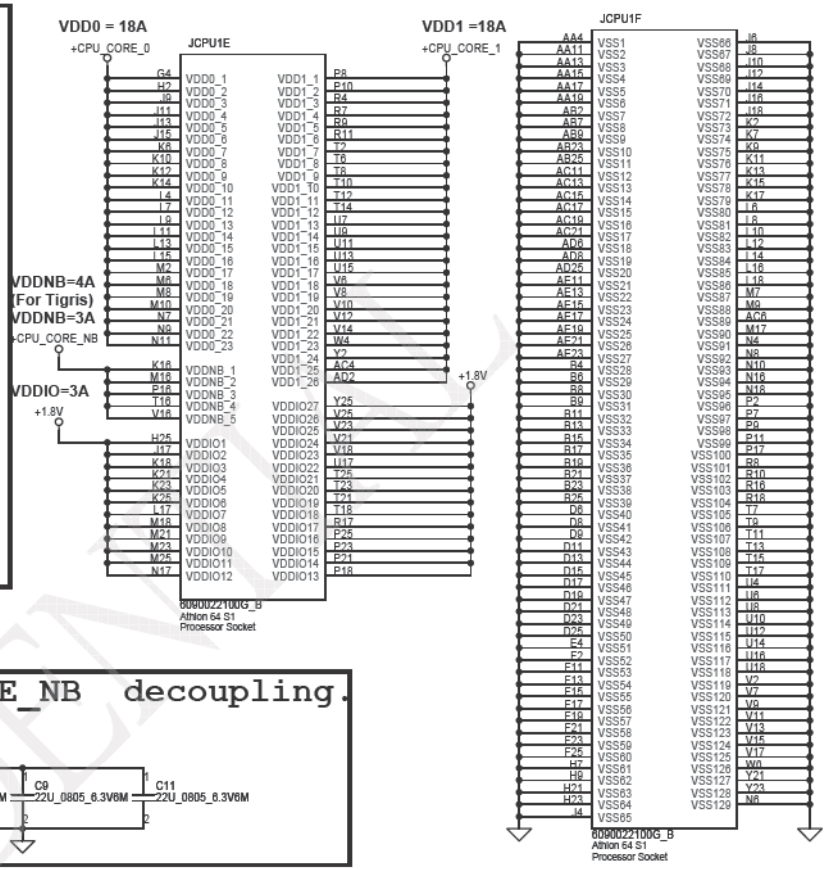

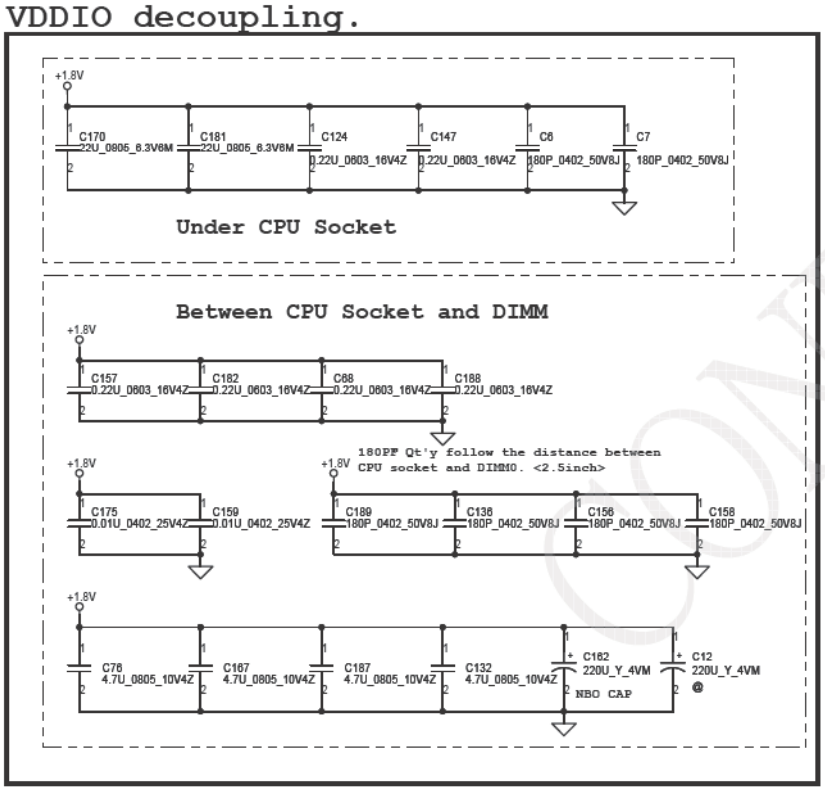

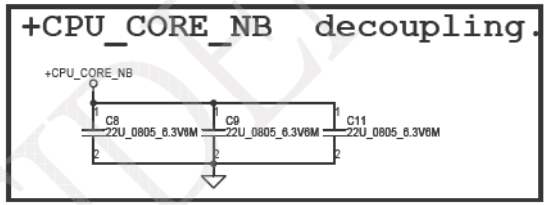

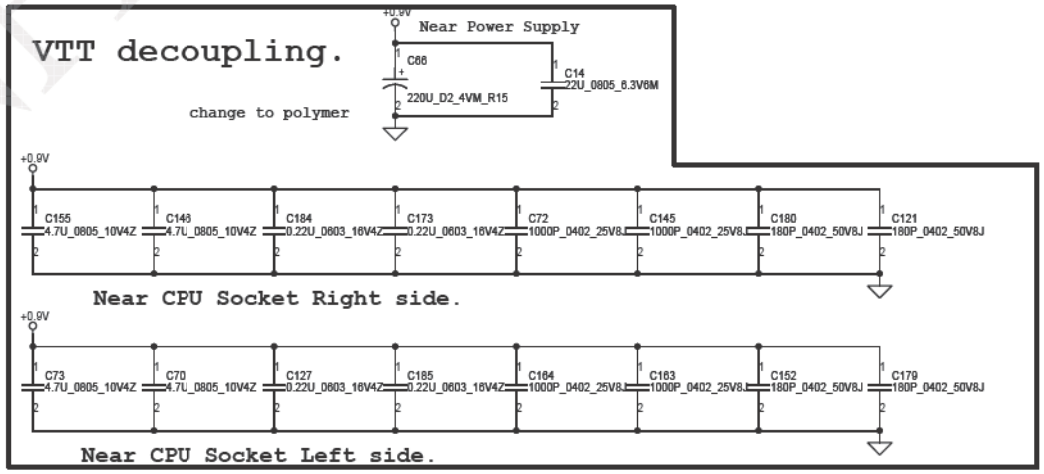

Security Classification	Compal Secret Data		
Issued Date	2009/09/11	Deciphered Date	2010/03/12

Title: SCHEMATIC,MB A5991

Compal Electronics, Inc.

THIS SHEET OF ENGINEERING DRAWING IS THE PROPRIETARY PROPERTY OF COMPAL ELECTRONICS, INC. AND CONTAINS CONFIDENTIAL AND TRADE SECRET INFORMATION. THIS SHEET MAY NOT BE TRANSFERED FROM THE CUSTODY OF THE COMPETENT DIVISION OF R&D DEPARTMENT EXCEPT AS AUTHORIZED BY COMPAL ELECTRONICS, INC. NEITHER THIS SHEET NOR THE INFORMATION IT CONTAINS MAY BE USED BY OR DISCLOSED TO ANY THIRD PARTY WITHOUT PRIOR WRITTEN CONSENT OF COMPAL ELECTRONICS, INC.

Size	Document Number	Rev
Custom	401830	A

Date: Tuesday, October 13, 2009 Sheet 9 of 47

http://laptop-motherboard-schematic.blogspot.com/

RESERVE
+V_DDR_MCH_REF BUFFER CIRCUIT

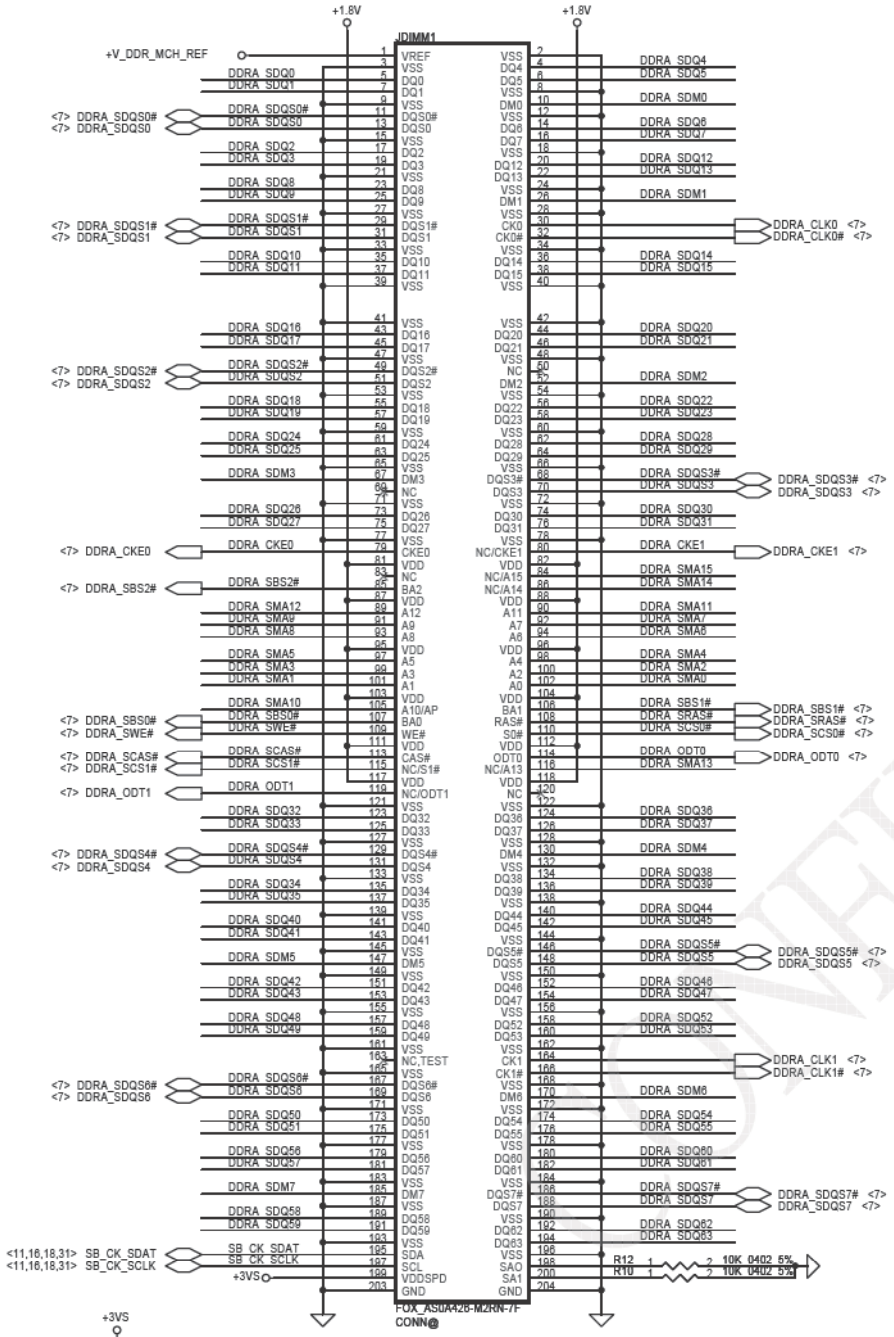

DIMM1 REV H:5.2mm (BOT)

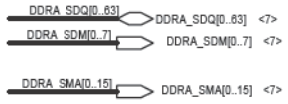

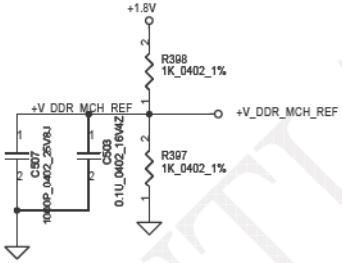

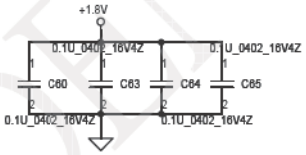

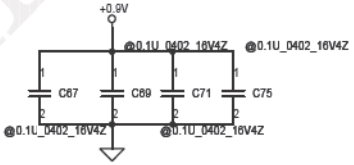

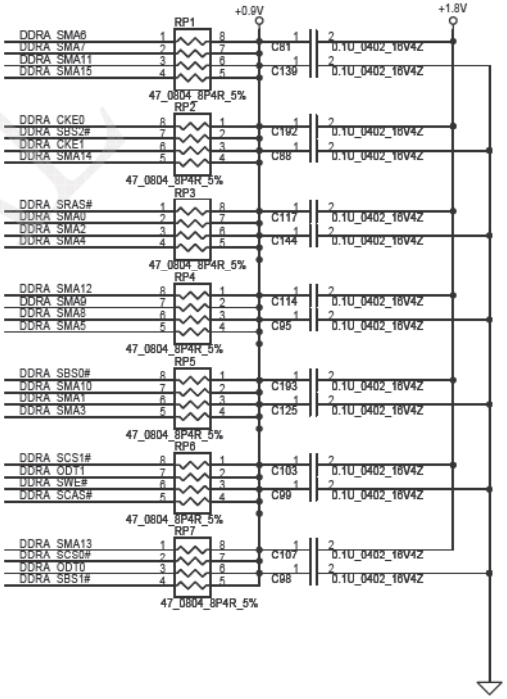

CONFIDENTIAL

Security Classification	Compal Secret Data			Compal Electronics, Inc.
Issued Date	2009/09/11	Deciphered Date	2010/03/12	Title: SCHEMATIC,MB A5991
				Size: Custom; Document Number: 401830; Rev: A
				Date: Tuesday, October 13, 2009; Sheet 10 of 47

THIS SHEET OF ENGINEERING DRAWING IS THE PROPRIETARY PROPERTY OF COMPAL ELECTRONICS, INC. AND CONTAINS CONFIDENTIAL AND TRADE SECRET INFORMATION. THIS SHEET MAY NOT BE TRANSFERRED FROM THE CUSTODY OF THE COMPETENT DIVISION OF R&D DEPARTMENT EXCEPT AS AUTHORIZED BY COMPAL ELECTRONICS, INC. NEITHER THIS SHEET NOR THE INFORMATION IT CONTAINS MAY BE USED BY OR DISCLOSED TO ANY THIRD PARTY WITHOUT PRIOR WRITTEN CONSENT OF COMPAL ELECTRONICS, INC.

http://laptop-motherboard-schematic.blogspot.com/

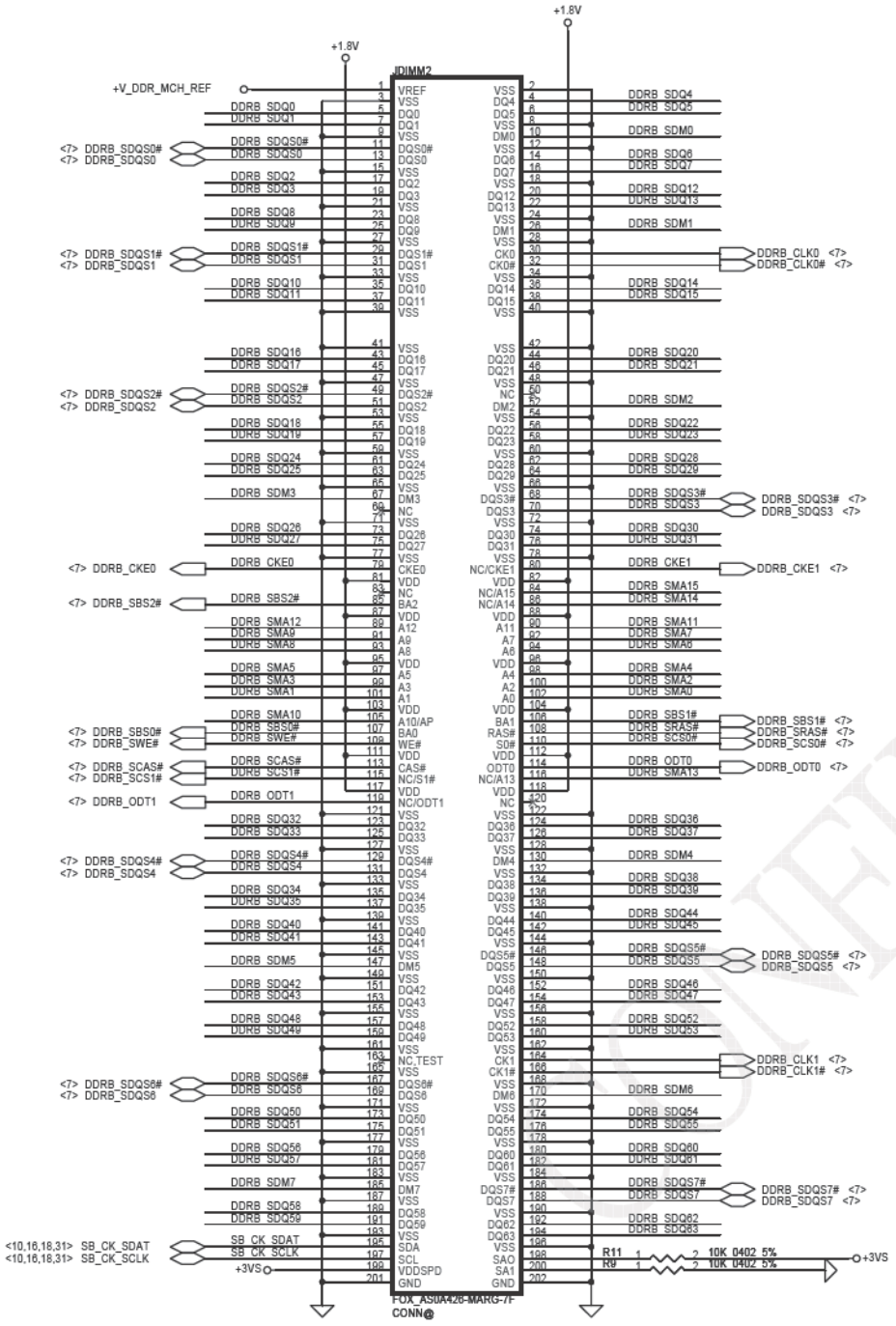

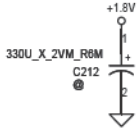

Place near to DIMM2

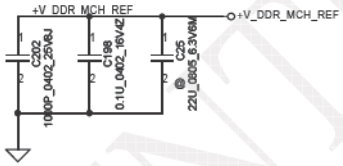

AMD recommend

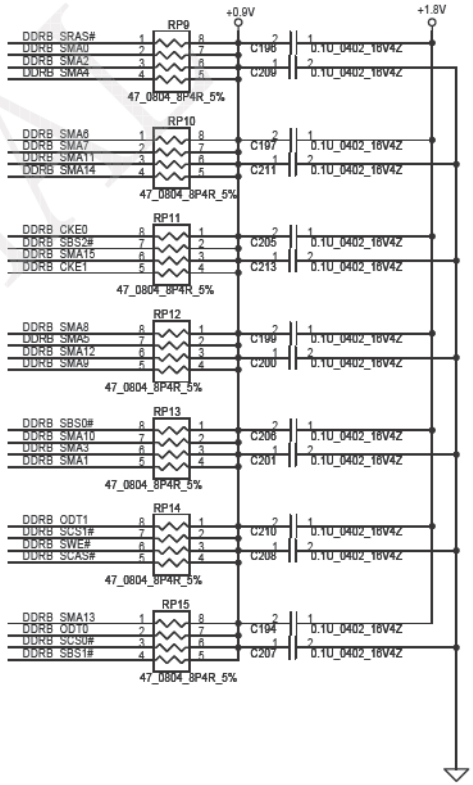

DIMM1 REV H:9.2mm (BOT)

Security Classification	Compal Secret Data			Compal Electronics, Inc.
Issued Date	2009/09/11	Deciphered Date	2010/03/12	Title: SCHEMATIC,MB A5991
THIS SHEET OF ENGINEERING DRAWING IS THE PROPRIETARY PROPERTY OF COMPAL ELECTRONICS, INC. AND CONTAINS CONFIDENTIAL AND TRADE SECRET INFORMATION. THIS SHEET MAY NOT BE TRANSFERED FROM THE CUSTODY OF THE COMPETENT DIVISION OF R&D DEPARTMENT EXCEPT AS AUTHORIZED BY COMPAL ELECTRONICS, INC. NEITHER THIS SHEET NOR THE INFORMATION IT CONTAINS MAY BE USED BY OR DISCLOSED TO ANY THIRD PARTY WITHOUT PRIOR WRITTEN CONSENT OF COMPAL ELECTRONICS, INC.				Size: Custom / Document Number: 401830 / Rev: A
				Date: Tuesday, October 13, 2009 / Sheet 11 of 47

http://laptop-motherboard-schematic.blogspot.com/

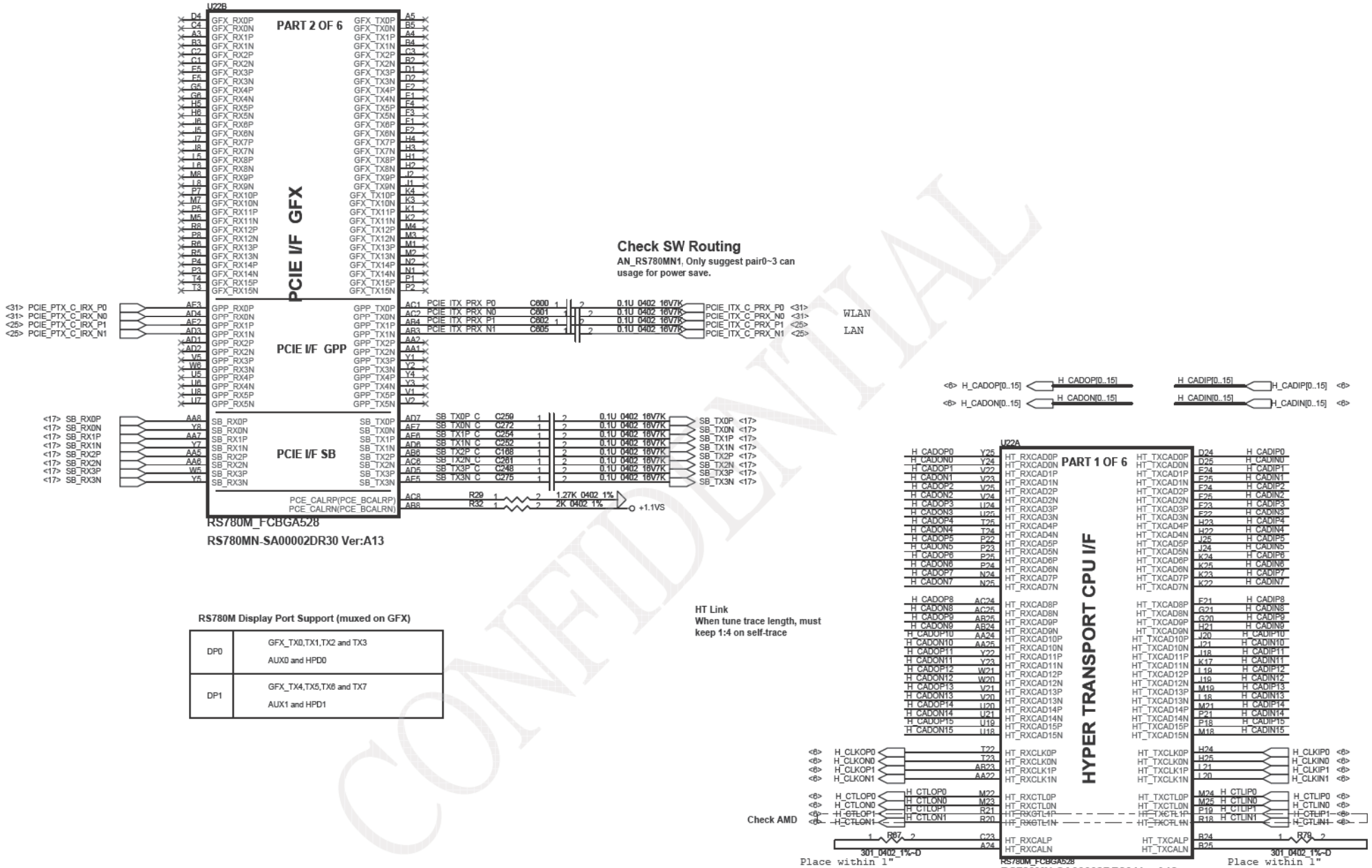

RS780M Display Port Support (muxed on GFX)

DP0	GFX_TX0,TX1,TX2 and TX3 AUX0 and HPD0
DP1	GFX_TX4,TX5,TX6 and TX7 AUX1 and HPD1

CONFIDENTIAL

Security Classification	Compal Secret Data			Compal Electronics, Inc.
Issued Date	2009/09/11	Deciphered Date	2010/03/12	Title: SCHEMATIC,MB A5991

THIS SHEET OF ENGINEERING DRAWING IS THE PROPRIETARY PROPERTY OF COMPAL ELECTRONICS, INC. AND CONTAINS CONFIDENTIAL AND TRADE SECRET INFORMATION. THIS SHEET MAY NOT BE TRANSFERED FROM THE CUSTODY OF THE COMPETENT DIVISION OF R&D DEPARTMENT EXCEPT AS AUTHORIZED BY COMPAL ELECTRONICS, INC. NEITHER THIS SHEET NOR THE INFORMATION IT CONTAINS MAY BE USED BY OR DISCLOSED TO ANY THIRD PARTY WITHOUT PRIOR WRITTEN CONSENT OF COMPAL ELECTRONICS, INC.

Size	Document Number	Rev
Custom	401830	A

Date: Wednesday, October 14, 2009 Sheet 12 of 47

http://laptop-motherboard-schematic.blogspot.com/

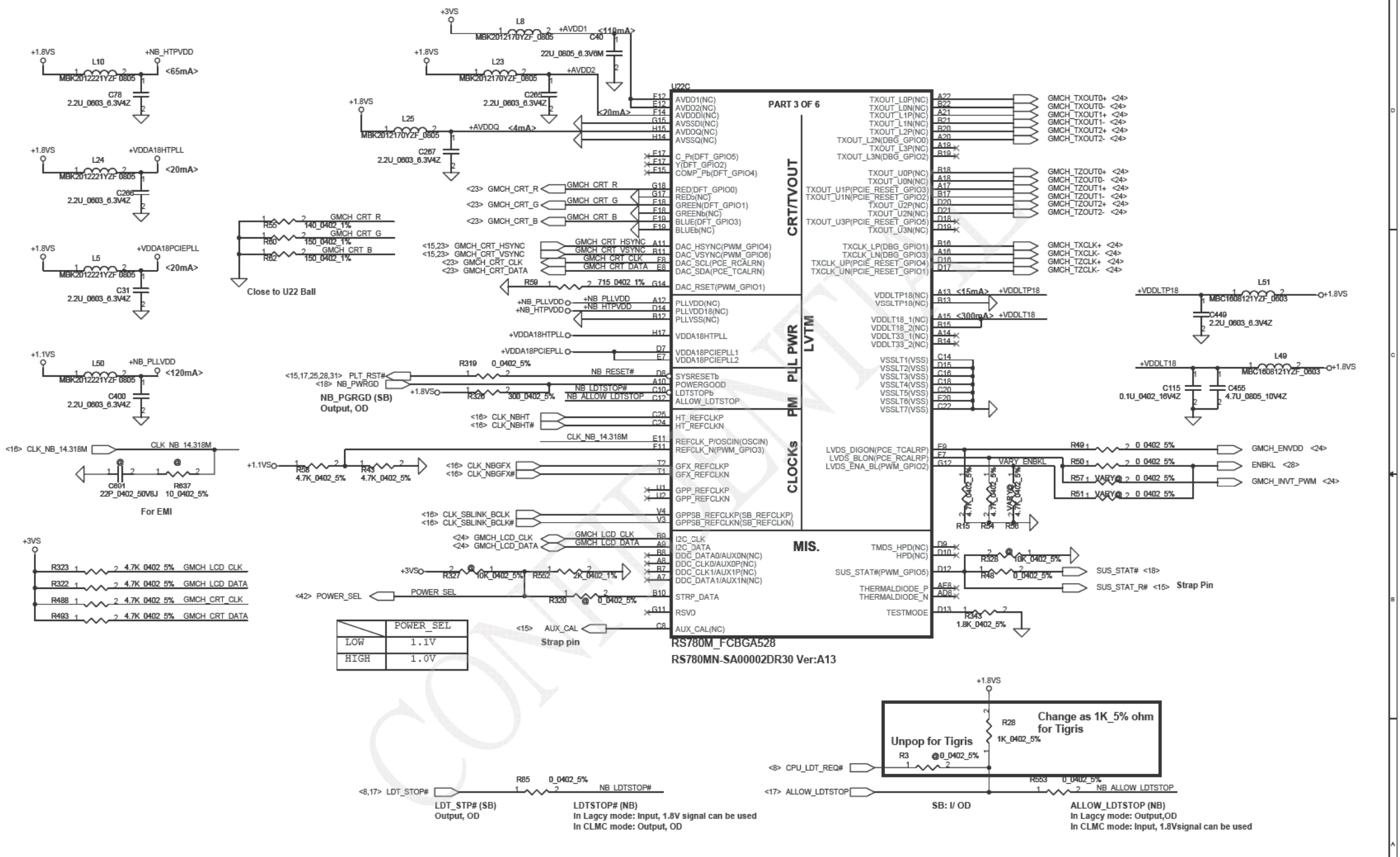

Security Classification	Compal Secret Data		
Issued Date	2009/09/11	Deciphered Date	2010/03/12

THIS SHEET OF ENGINEERING DRAWING IS THE PROPRIETARY PROPERTY OF COMPAL ELECTRONICS, INC. AND CONTAINS CONFIDENTIAL AND TRADE SECRET INFORMATION. THIS SHEET MAY NOT BE TRANSFERED FROM THE CUSTODY OF THE COMPETENT DIVISION OF R&D DEPARTMENT EXCEPT AS AUTHORIZED BY COMPAL ELECTRONICS, INC. NEITHER THIS SHEET NOR THE INFORMATION IT CONTAINS MAY BE USED BY OR DISCLOSED TO ANY THIRD PARTY WITHOUT PRIOR WRITTEN CONSENT OF COMPAL ELECTRONICS, INC.

Compal Electronics, Inc.

Title: SCHEMATIC,MB A5991

Size: Custom | Document Number: 401830 | Rev: A

Date: Wednesday, October 14, 2009 | Sheet 13 of 47

http://laptop-motherboard-schematic.blogspot.com/

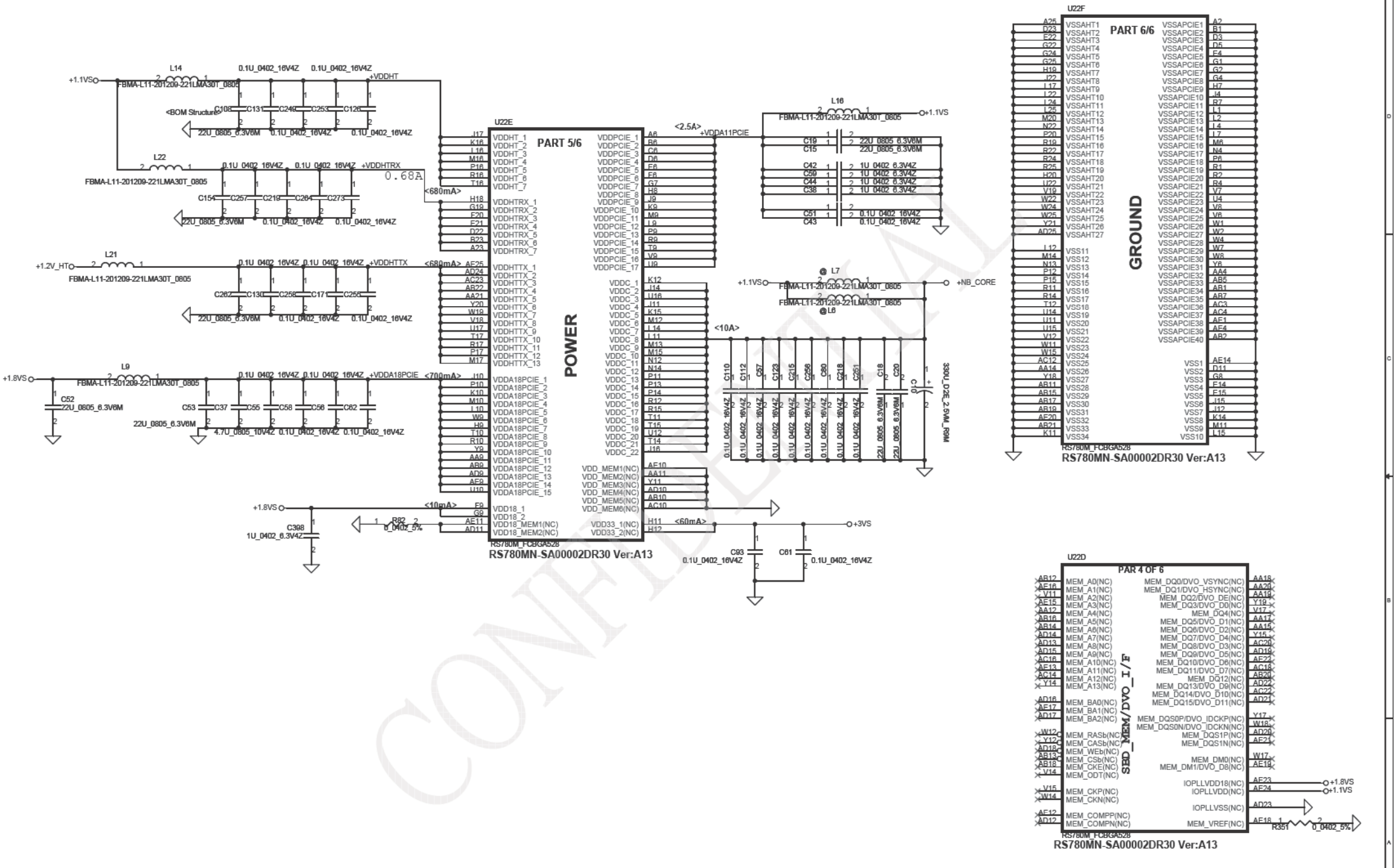

Security Classification	Compal Secret Data		
Issued Date	2009/09/11	Deciphered Date	2010/03/12

THIS SHEET OF ENGINEERING DRAWING IS THE PROPRIETARY PROPERTY OF COMPAL ELECTRONICS, INC. AND CONTAINS CONFIDENTIAL AND TRADE SECRET INFORMATION. THIS SHEET MAY NOT BE TRANSFERED FROM THE CUSTODY OF THE COMPETENT DIVISION OF R&D DEPARTMENT EXCEPT AS AUTHORIZED BY COMPAL ELECTRONICS, INC. NEITHER THIS SHEET NOR THE INFORMATION IT CONTAINS MAY BE USED BY OR DISCLOSED TO ANY THIRD PARTY WITHOUT PRIOR WRITTEN CONSENT OF COMPAL ELECTRONICS, INC.

Compal Electronics, Inc.

Title: SCHEMATIC,MB A5991

Size	Document Number	Rev
Custom	401830	A

Date: Wednesday, October 14, 2009 | Sheet 14 of 47

http://laptop-motherboard-schematic.blogspot.com/

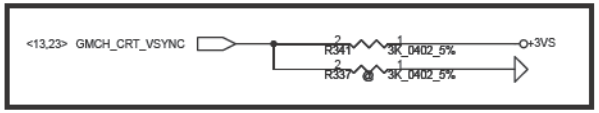

DFT_GPIO5:STRAP_DEBUG_BUS_GPIO_ENABLEb

```
Enables the Test Debug Bus using GPIO. (VSYNC)
1 : Disable (RS780)
0 : Enable (Rs780)
```

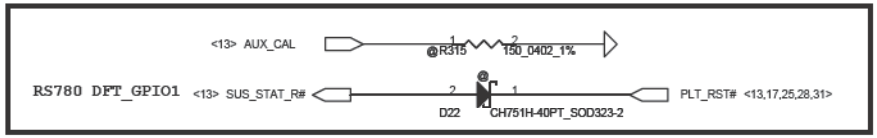

DFT_GPIO1: LOAD_EEPROM_STRAPS

```
Selects Loading of STRAPS from EPROM
1 : Bypass the loading of EEPROM straps and use Hardware Default Values
0 : I2C Master can load strap values from EEPROM if connected, or use
default values if not connected
RS740/RX780: DFT_GPIO1  RS780:SUS_STAT
```

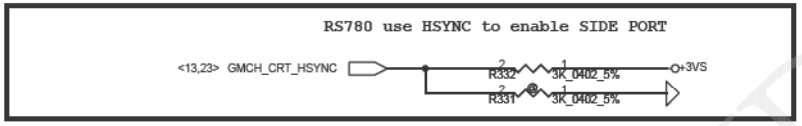

RS780 use HSYNC to enable SIDE PORT

```
RS740/RS780: Enables Side port memory ( RS780 use HSYNC#)
0.   Enable (RS780)
1 :  Disable(RS780)
```

CONFIDENTIAL

Security Classification	Compal Secret Data			Compal Electronics, Inc.
Issued Date	2009/09/11	Deciphered Date	2010/03/12	Title: SCHEMATIC,MB A5991
				Size: Custom / Document Number: 401830 / Rev: A
				Date: Wednesday, October 14, 2009 / Sheet 15 of 47

THIS SHEET OF ENGINEERING DRAWING IS THE PROPRIETARY PROPERTY OF COMPAL ELECTRONICS, INC. AND CONTAINS CONFIDENTIAL AND TRADE SECRET INFORMATION. THIS SHEET MAY NOT BE TRANSFERED FROM THE CUSTODY OF THE COMPETENT DIVISION OF R&D DEPARTMENT EXCEPT AS AUTHORIZED BY COMPAL ELECTRONICS, INC. NEITHER THIS SHEET NOR THE INFORMATION IT CONTAINS MAY BE USED BY OR DISCLOSED TO ANY THIRD PARTY WITHOUT PRIOR WRITTEN CONSENT OF COMPAL ELECTRONICS, INC.

http://laptop-motherboard-schematic.blogspot.com/

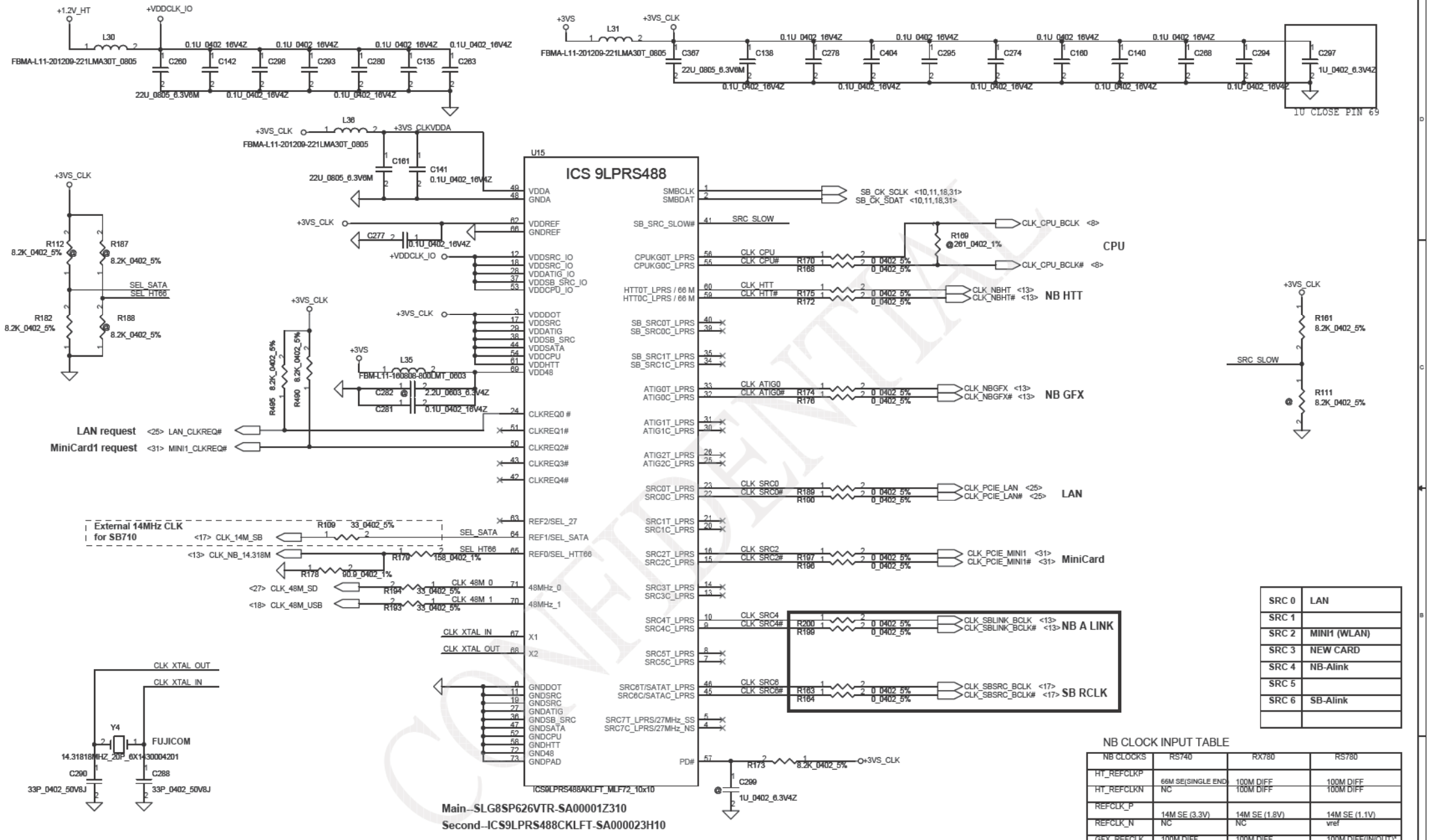

SRC 0	LAN
SRC 1	
SRC 2	MINI1 (WLAN)
SRC 3	NEW CARD
SRC 4	NB-Alink
SRC 5	
SRC 6	SB-Alink

NB CLOCK INPUT TABLE

NB CLOCKS	RS740	RX780	RS780
HT_REFCLKP	66M SE(SINGLE END)	100M DIFF	100M DIFF
HT_REFCLKN	NC	100M DIFF	100M DIFF
REFCLK_P	14M SE (3.3V)	14M SE (1.8V)	14M SE (1.1V)
REFCLK_N	NC	NC	vref
GFX_REFCLK	100M DIFF	100M DIFF	100M DIFF(IN/OUT)*
GPP_REFCLK	NC	100M DIFF	NC
GPPSB_REFCLK	100M DIFF	100M DIFF	100M DIFF

SEL_HTT66	1	configure as single-ended 66MHz output
	0*	configure as differential 100MHz output
SEL_SATA	1*	SS 100M SATA SRC6 output
	0	SS 100M SATA SRC6 output

* default

SEL_27M No used	1	configure as 27M and 27M SS output
	0	configure as SRC 7 output

Security Classification	Compal Secret Data		
Issued Date	2009/09/11	Deciphered Date	2010/03/12

THIS SHEET OF ENGINEERING DRAWING IS THE PROPRIETARY PROPERTY OF COMPAL ELECTRONICS, INC. AND CONTAINS CONFIDENTIAL AND TRADE SECRET INFORMATION. THIS SHEET MAY NOT BE TRANSFERED FROM THE CUSTODY OF THE COMPETENT DIVISION OF R&D DEPARTMENT EXCEPT AS AUTHORIZED BY COMPAL ELECTRONICS, INC. NEITHER THIS SHEET NOR THE INFORMATION IT CONTAINS MAY BE USED BY OR DISCLOSED TO ANY THIRD PARTY WITHOUT PRIOR WRITTEN CONSENT OF COMPAL ELECTRONICS, INC.

Compal Electronics, Inc.

Title: SCHEMATIC,MB A5991

Size: Custom | Document Number: 401830 | Rev: A

Date: Wednesday, October 14, 2009 | Sheet 16 of 47

http://laptop-motherboard-schematic.blogspot.com/

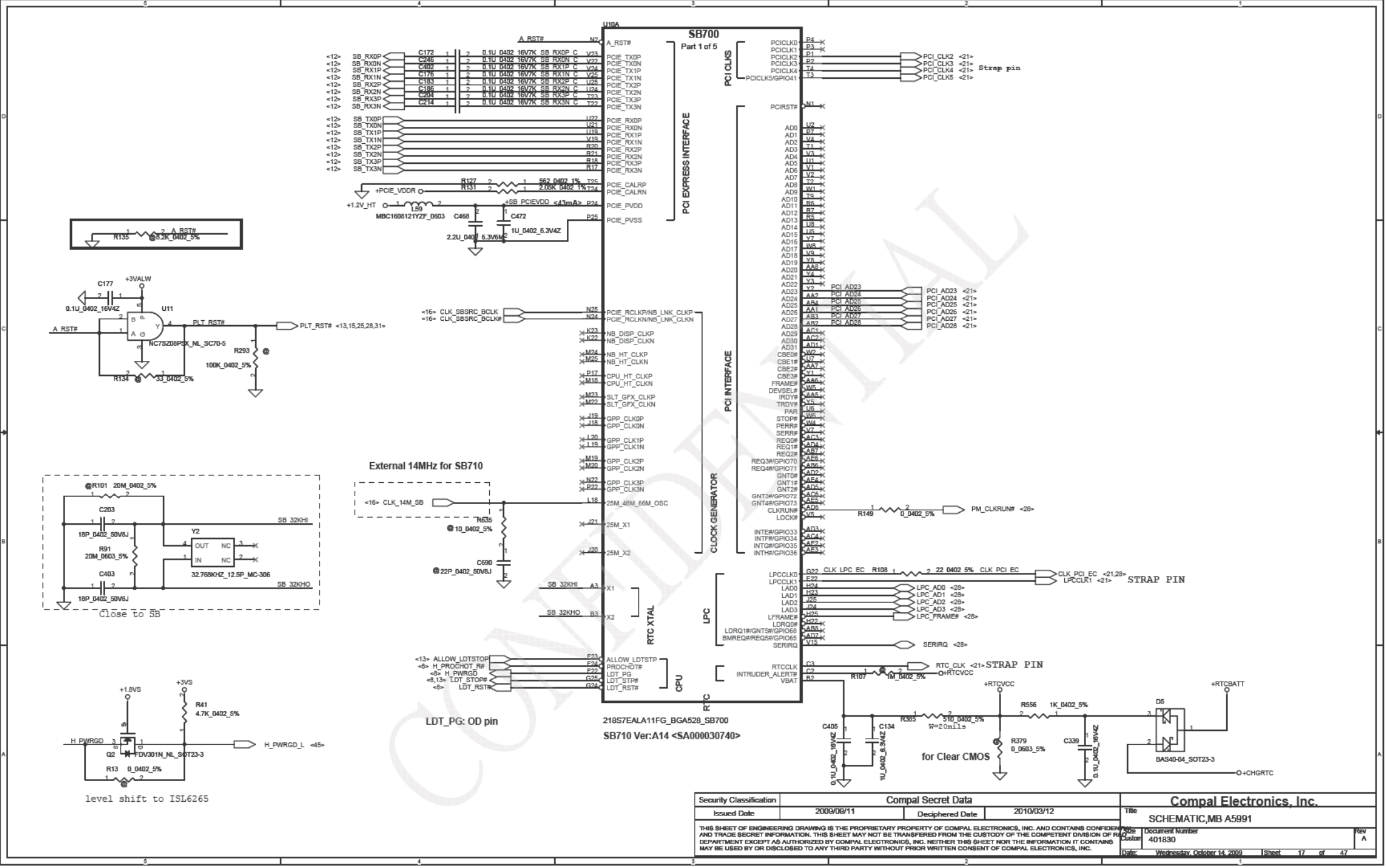

http://laptop-motherboard-schematic.blogspot.com/

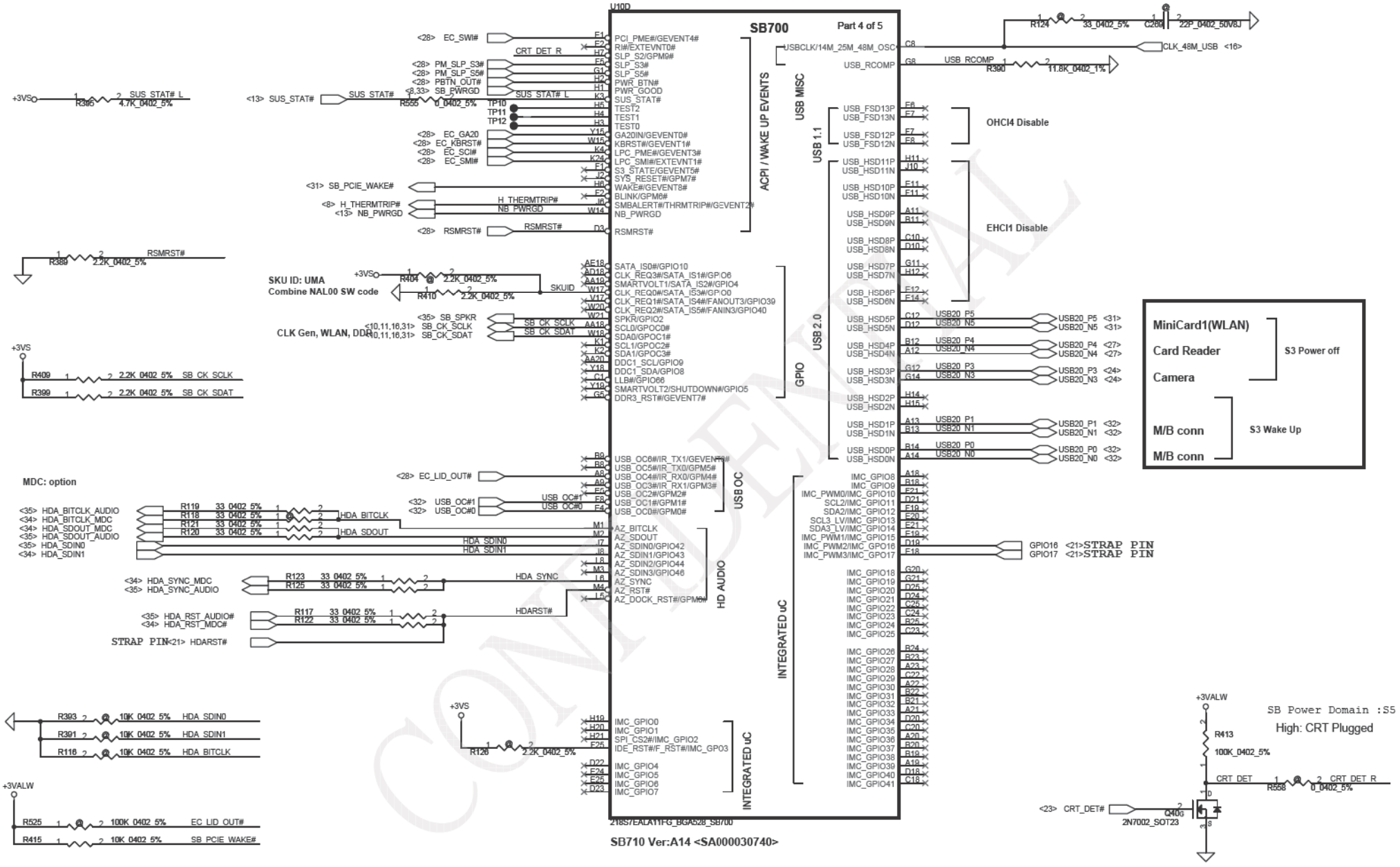

Security Classification	Compal Secret Data		
Issued Date	2009/09/11	Deciphered Date	2010/03/12

THIS SHEET OF ENGINEERING DRAWING IS THE PROPRIETARY PROPERTY OF COMPAL ELECTRONICS, INC. AND CONTAINS CONFIDENTIAL AND TRADE SECRET INFORMATION. THIS SHEET MAY NOT BE TRANSFERED FROM THE CUSTODY OF THE COMPETENT DIVISION OF R&D DEPARTMENT EXCEPT AS AUTHORIZED BY COMPAL ELECTRONICS, INC. NEITHER THIS SHEET NOR THE INFORMATION IT CONTAINS MAY BE USED BY OR DISCLOSED TO ANY THIRD PARTY WITHOUT PRIOR WRITTEN CONSENT OF COMPAL ELECTRONICS, INC.

Compal Electronics, Inc.

Title: SCHEMATIC,MB A5991

Size: Custom | Document Number: 401830 | Rev: A

Date: Wednesday, October 14, 2009 | Sheet 18 of 47

http://laptop-motherboard-schematic.blogspot.com/

Port Number	Pri/SEC,Mas/Slave assignment	SATA drive controlled by
Port 0	Primary master	SATA controler
Port 1	Secondary master	SATA controler
Port 2	Primary slave	SATA controler
Port 3	Secondary slave	SATA controler
Port 4	Primary (Secondary) master	PATA controler
Port 5	Primary (Secondary) slave	PATA controler

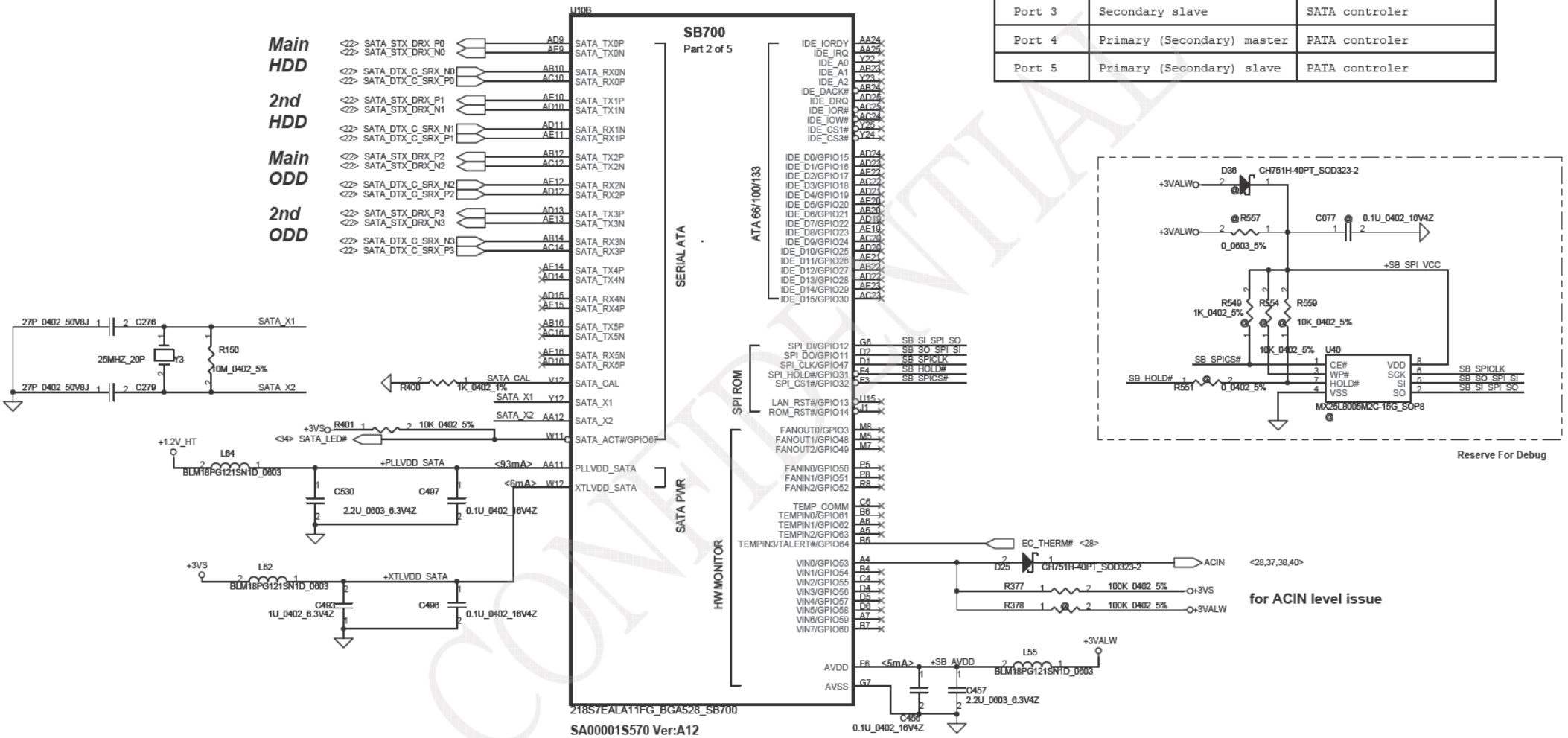

CONFIDENTIAL

Security Classification	Compal Secret Data			Compal Electronics, Inc.
Issued Date	2009/09/11	Deciphered Date	2010/03/12	Title: SCHEMATIC,MB A5991
				Size: Custom; Document Number: 401830; Rev: A
				Date: Wednesday, October 14, 2009; Sheet 19 of 47

THIS SHEET OF ENGINEERING DRAWING IS THE PROPRIETARY PROPERTY OF COMPAL ELECTRONICS, INC. AND CONTAINS CONFIDENTIAL AND TRADE SECRET INFORMATION. THIS SHEET MAY NOT BE TRANSFERED FROM THE CUSTODY OF THE COMPETENT DIVISION OF R&D DEPARTMENT EXCEPT AS AUTHORIZED BY COMPAL ELECTRONICS, INC. NEITHER THIS SHEET NOR THE INFORMATION IT CONTAINS MAY BE USED BY OR DISCLOSED TO ANY THIRD PARTY WITHOUT PRIOR WRITTEN CONSENT OF COMPAL ELECTRONICS, INC.

http://laptop-motherboard-schematic.blogspot.com/

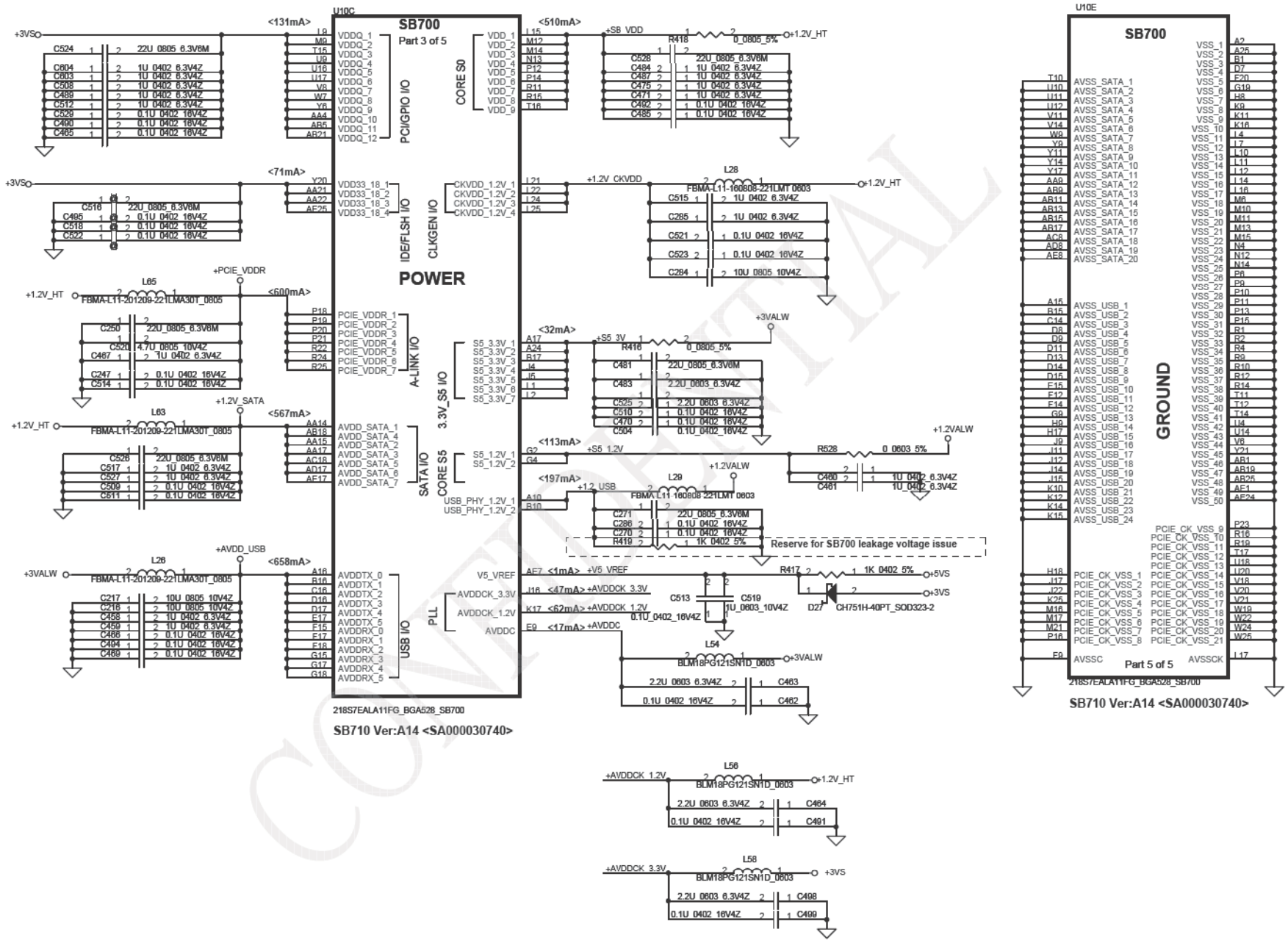

Security Classification	Compal Secret Data			Compal Electronics, Inc.
Issued Date	2009/09/11	Deciphered Date	2010/03/12	Title: SCHEMATIC,MB A5991
				Size: Custom; Document Number: 401830; Rev: A
				Date: Thursday, October 15, 2009; Sheet 20 of 47

THIS SHEET OF ENGINEERING DRAWING IS THE PROPRIETARY PROPERTY OF COMPAL ELECTRONICS, INC. AND CONTAINS CONFIDENTIAL AND TRADE SECRET INFORMATION. THIS SHEET MAY NOT BE TRANSFERED FROM THE CUSTODY OF THE COMPETENT DIVISION OF R&D DEPARTMENT EXCEPT AS AUTHORIZED BY COMPAL ELECTRONICS, INC. NEITHER THIS SHEET NOR THE INFORMATION IT CONTAINS MAY BE USED BY OR DISCLOSED TO ANY THIRD PARTY WITHOUT PRIOR WRITTEN CONSENT OF COMPAL ELECTRONICS, INC.

http://laptop-motherboard-schematic.blogspot.com/

REQUIRED STRAPS

NOTE: SB700 HAS INTERNAL 15K PULL UP RESISTOR FOR RTC_CLK

	PCI_CLK2	PCI_CLK3	PCI_CLK4	PCI_CLK5	LPC_CLK0 CLK_PCI_EC	LPC_CLK1	RTC_CLK	AZ_RST_CD#	GP17 GP16
PULL HIGH	BOOTFAIL TIMER ENABLED	USE DEBUG STRAPS	RESERVED	RESERVED	ENABLE PCI MEM BOOT	CLKGEN ENABLED	INTERNAL RTC DEFAULT	EC ENABLED	Internal pull up H,H = Reserved H,L = SPI ROM L,H = LPC ROM (Default L,NC) L,L = FWH ROM
PULL LOW	BOOTFAIL TIMER DISABLED DEFAULT	IGNORE DEBUG STRAPS DEFAULT			DISABLE PCI MEM BOOT DEFAULT	CLKGEN DISABLED DEFAULT	EXT. RTC (PD on X1, apply 32KHz to RTC_CLK)	EC DISABLED DEFAULT	

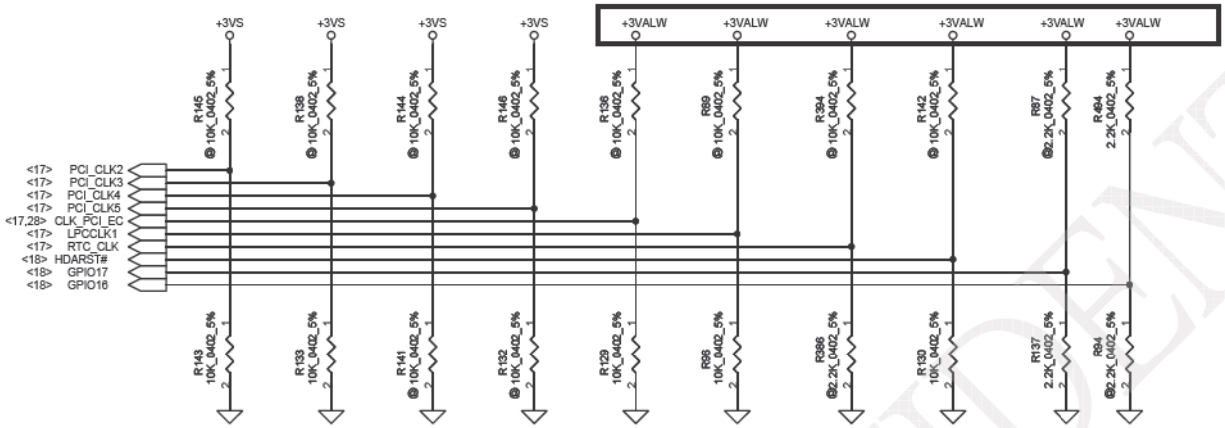

DEBUG STRAPS

DEBUG STRAPS

SB700 HAS 15K INTERNAL PU FOR PCI_AD[28:23]

	PCI_AD28	PCI_AD27	PCI_AD26	PCI_AD25	PCI_AD24	PCI_AD23
PULL HIGH	USE LONG RESET DEFAULT	USE PCI PLL DEFAULT	USE ACPI BCLK DEFAULT	USE IDE PLL DEFAULT	USE DEFAULT PCIE STRAPS DEFAULT	RESERVED
PULL LOW	USE SHORT RESET	BYPASS PCI PLL	BYPASS ACPI BCLK	BYPASS IDE PLL	USE EEPROM PCIE STRAPS	

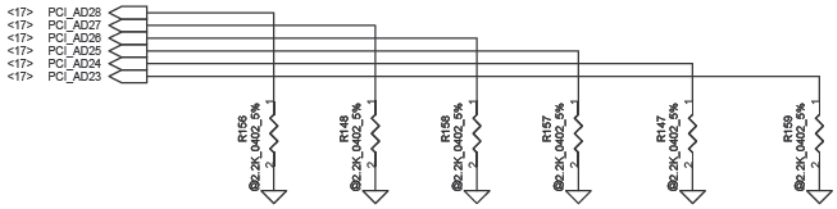

CONFIDENTIAL

Security Classification	Compal Secret Data			Compal Electronics, Inc.
Issued Date	2009/09/11	Deciphered Date	2010/03/12	Title: SCHEMATIC,MB A5991
				Size: Custom; Document Number: 401830; Rev: A
				Date: Thursday, October 15, 2009; Sheet 21 of 47

THIS SHEET OF ENGINEERING DRAWING IS THE PROPRIETARY PROPERTY OF COMPAL ELECTRONICS, INC. AND CONTAINS CONFIDENTIAL AND TRADE SECRET INFORMATION. THIS SHEET MAY NOT BE TRANSFERED FROM THE CUSTODY OF THE COMPETENT DIVISION OF R&D DEPARTMENT EXCEPT AS AUTHORIZED BY COMPAL ELECTRONICS, INC. NEITHER THIS SHEET NOR THE INFORMATION IT CONTAINS MAY BE USED BY OR DISCLOSED TO ANY THIRD PARTY WITHOUT PRIOR WRITTEN CONSENT OF COMPAL ELECTRONICS, INC.

http://laptop-motherboard-schematic.blogspot.com/

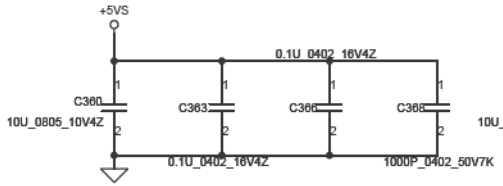

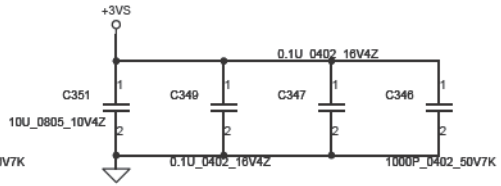

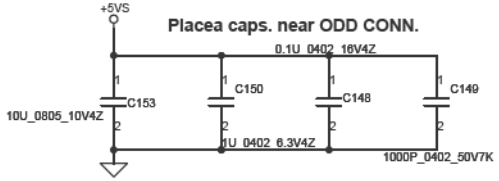

SATA HDD CONN

SATA ODD CONN

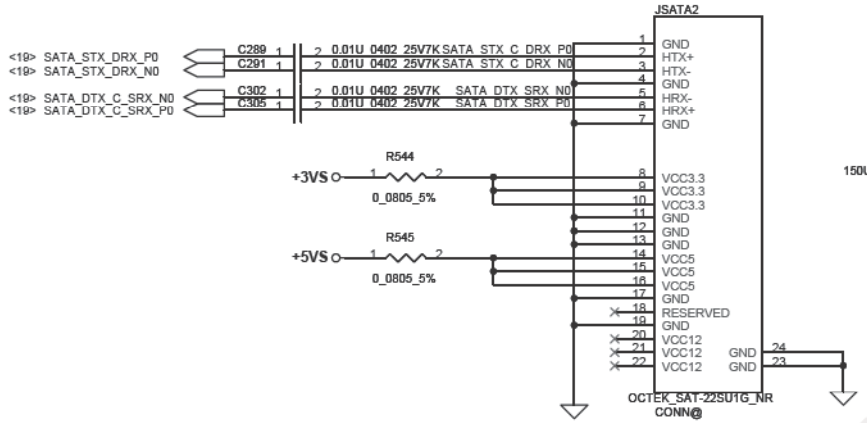

KALA0 used

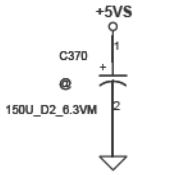

Close to SATA HDD

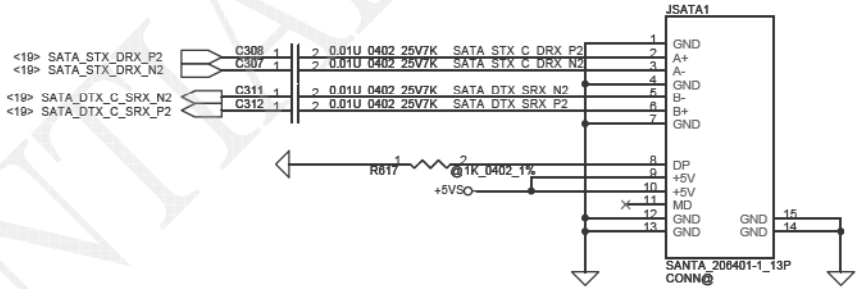

KALA0 used

Second HDD

Second ODD

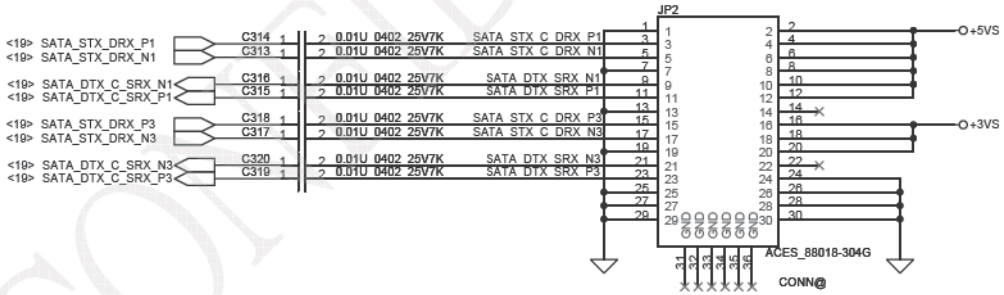

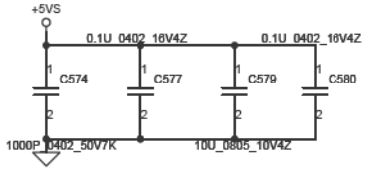

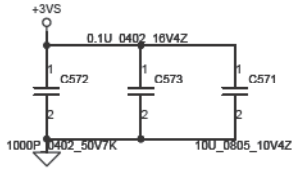

CONFIDENTIAL

Security Classification	Compal Secret Data			Compal Electronics, Inc.
Issued Date	2009/09/11	Deciphered Date	2010/03/12	Title: SCHEMATIC,MB A5991
				Size: B / Document Number: 401830 / Rev: A
				Date: Thursday, October 15, 2009 / Sheet 22 of 47

THIS SHEET OF ENGINEERING DRAWING IS THE PROPRIETARY PROPERTY OF COMPAL ELECTRONICS, INC. AND CONTAINS CONFIDENTIAL AND TRADE SECRET INFORMATION. THIS SHEET MAY NOT BE TRANSFERED FROM THE CUSTODY OF THE COMPETENT DIVISION OF R&D DEPARTMENT EXCEPT AS AUTHORIZED BY COMPAL ELECTRONICS, INC. NEITHER THIS SHEET NOR THE INFORMATION IT CONTAINS MAY BE USED BY OR DISCLOSED TO ANY THIRD PARTY WITHOUT PRIOR WRITTEN CONSENT OF COMPAL ELECTRONICS, INC.

http://laptop-motherboard-schematic.blogspot.com/

CRT Connector

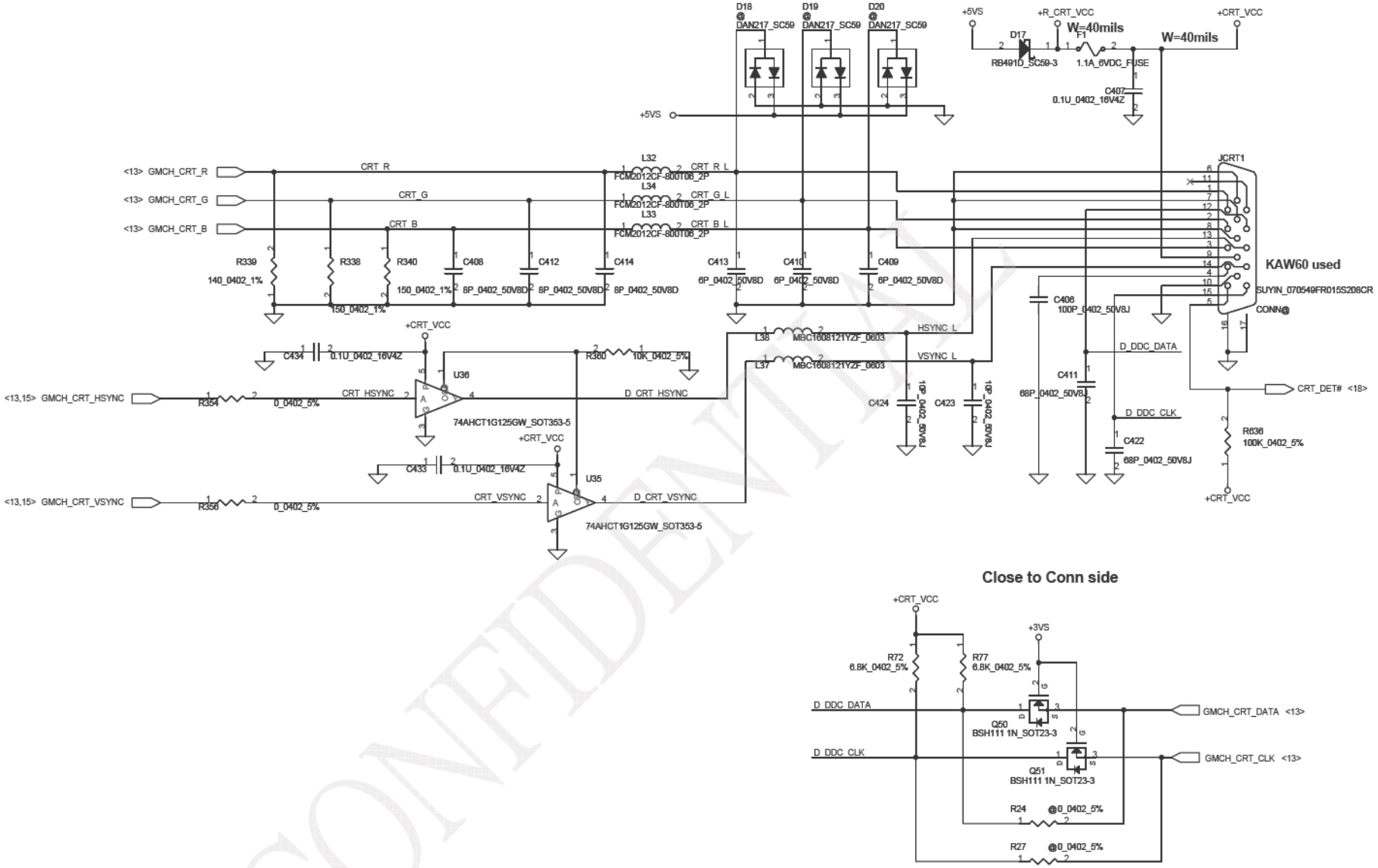

Close to Conn side

CONFIDENTIAL

Security Classification	Compal Secret Data		
Issued Date	2009/09/11	Deciphered Date	2010/03/12

THIS SHEET OF ENGINEERING DRAWING IS THE PROPRIETARY PROPERTY OF COMPAL ELECTRONICS, INC. AND CONTAINS CONFIDENTIAL AND TRADE SECRET INFORMATION. THIS SHEET MAY NOT BE TRANSFERED FROM THE CUSTODY OF THE COMPETENT DIVISION OF R&D DEPARTMENT EXCEPT AS AUTHORIZED BY COMPAL ELECTRONICS, INC. NEITHER THIS SHEET NOR THE INFORMATION IT CONTAINS MAY BE USED BY OR DISCLOSED TO ANY THIRD PARTY WITHOUT PRIOR WRITTEN CONSENT OF COMPAL ELECTRONICS, INC.

http://laptop-motherboard-schematic.com/

Compal Electronics, Inc.		
Title: SCHEMATIC,MB A5991		
Size: Custom	Document Number: 401830	Rev: A
Date: Thursday, October 15, 2009	Sheet 23 of 47	

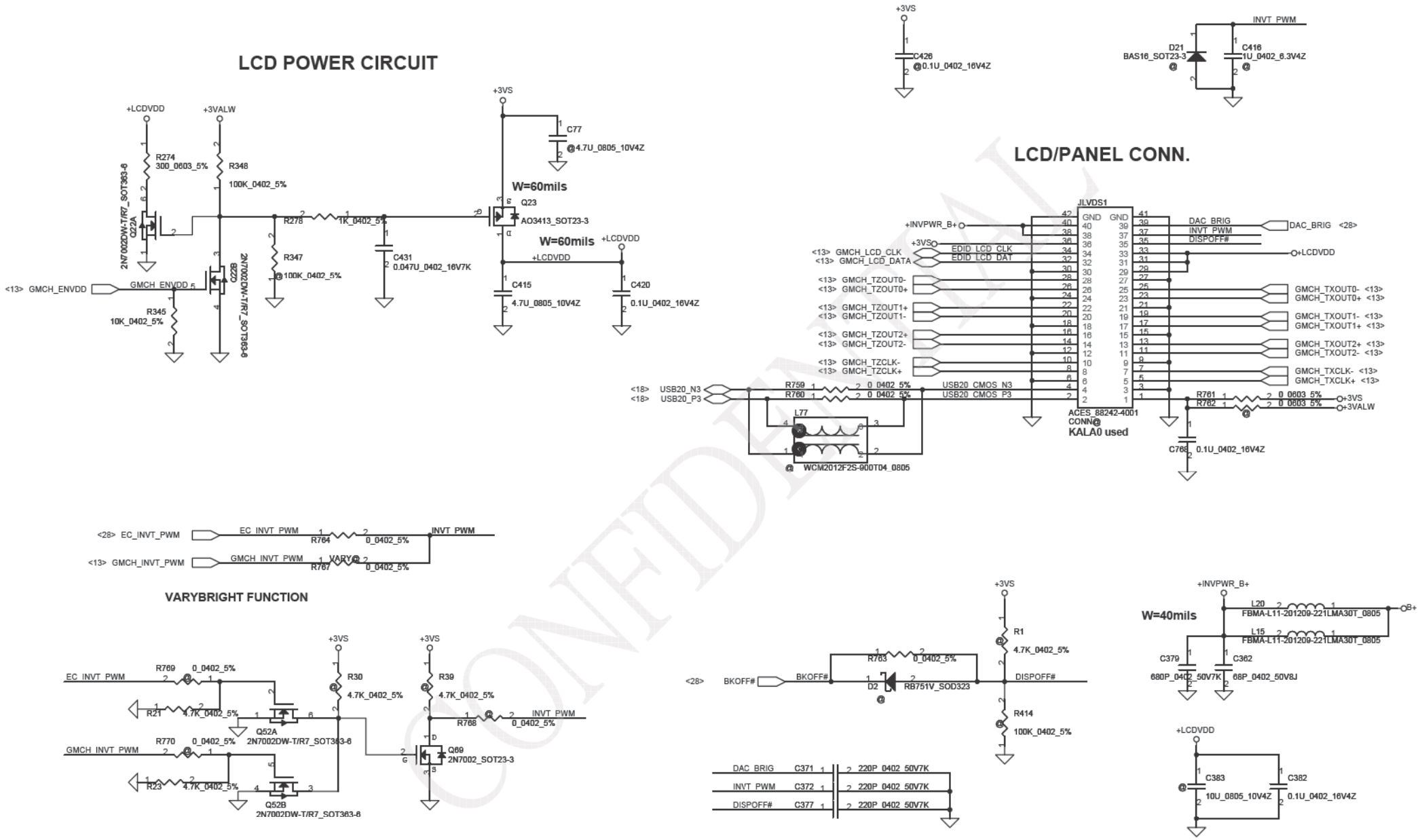

Security Classification	Compal Secret Data		
Issued Date	2009/09/11	Deciphered Date	2010/03/12

Compal Electronics, Inc.

Title: SCHEMATIC,MB A5991

Size: Custom | Document Number: 401830 | Rev: A

Date: Thursday, October 15, 2009 | Sheet 24 of 47

THIS SHEET OF ENGINEERING DRAWING IS THE PROPRIETARY PROPERTY OF COMPAL ELECTRONICS, INC. AND CONTAINS CONFIDENTIAL AND TRADE SECRET INFORMATION. THIS SHEET MAY NOT BE TRANSFERED FROM THE CUSTODY OF THE COMPETENT DIVISION OF R&D DEPARTMENT EXCEPT AS AUTHORIZED BY COMPAL ELECTRONICS, INC. NEITHER THIS SHEET NOR THE INFORMATION IT CONTAINS MAY BE USED BY OR DISCLOSED TO ANY THIRD PARTY WITHOUT PRIOR WRITTEN CONSENT OF COMPAL ELECTRONICS, INC.

CONFIDENTIAL

http://laptop-motherboard-schematic.blogspot.com/

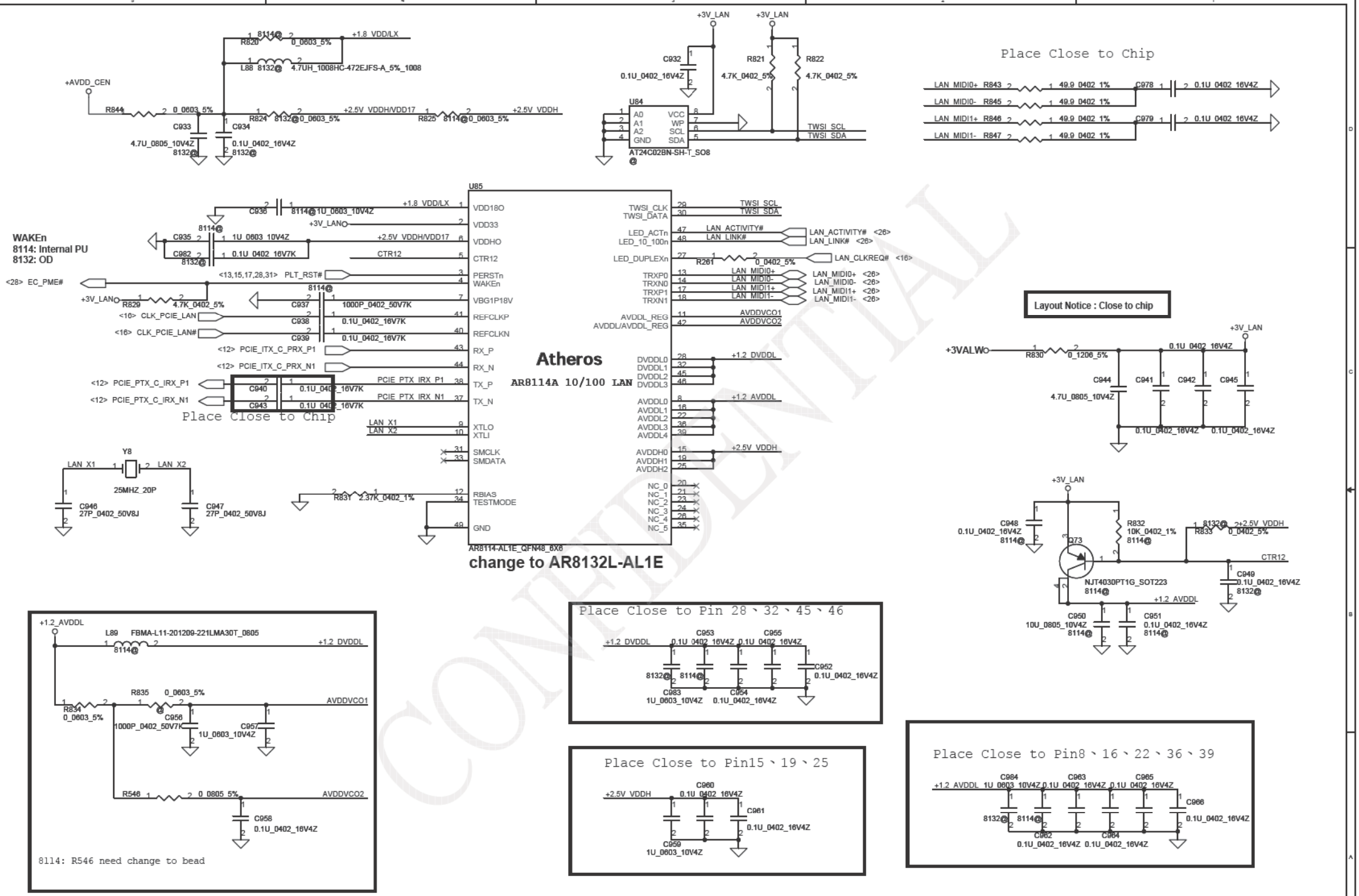

CONFIDENTIAL

Security Classification	Compal Secret Data		
Issued Date	2009/09/11	Deciphered Date	2010/03/12

THIS SHEET OF ENGINEERING DRAWING IS THE PROPRIETARY PROPERTY OF COMPAL ELECTRONICS, INC. AND CONTAINS CONFIDENTIAL AND TRADE SECRET INFORMATION. THIS SHEET MAY NOT BE TRANSFERED FROM THE CUSTODY OF THE COMPETENT DIVISION OF R&D DEPARTMENT EXCEPT AS AUTHORIZED BY COMPAL ELECTRONICS, INC. NEITHER THIS SHEET NOR THE INFORMATION IT CONTAINS MAY BE USED BY OR DISCLOSED TO ANY THIRD PARTY WITHOUT PRIOR WRITTEN CONSENT OF COMPAL ELECTRONICS, INC.

Compal Electronics, Inc.

Title: SCHEMATIC,MB A5991

Size: B | Document Number: 401830 | Rev: A

Date: Thursday, October 15, 2009 | Sheet 25 of 47

http://laptop-motherboard-schematic.blogspot.com/

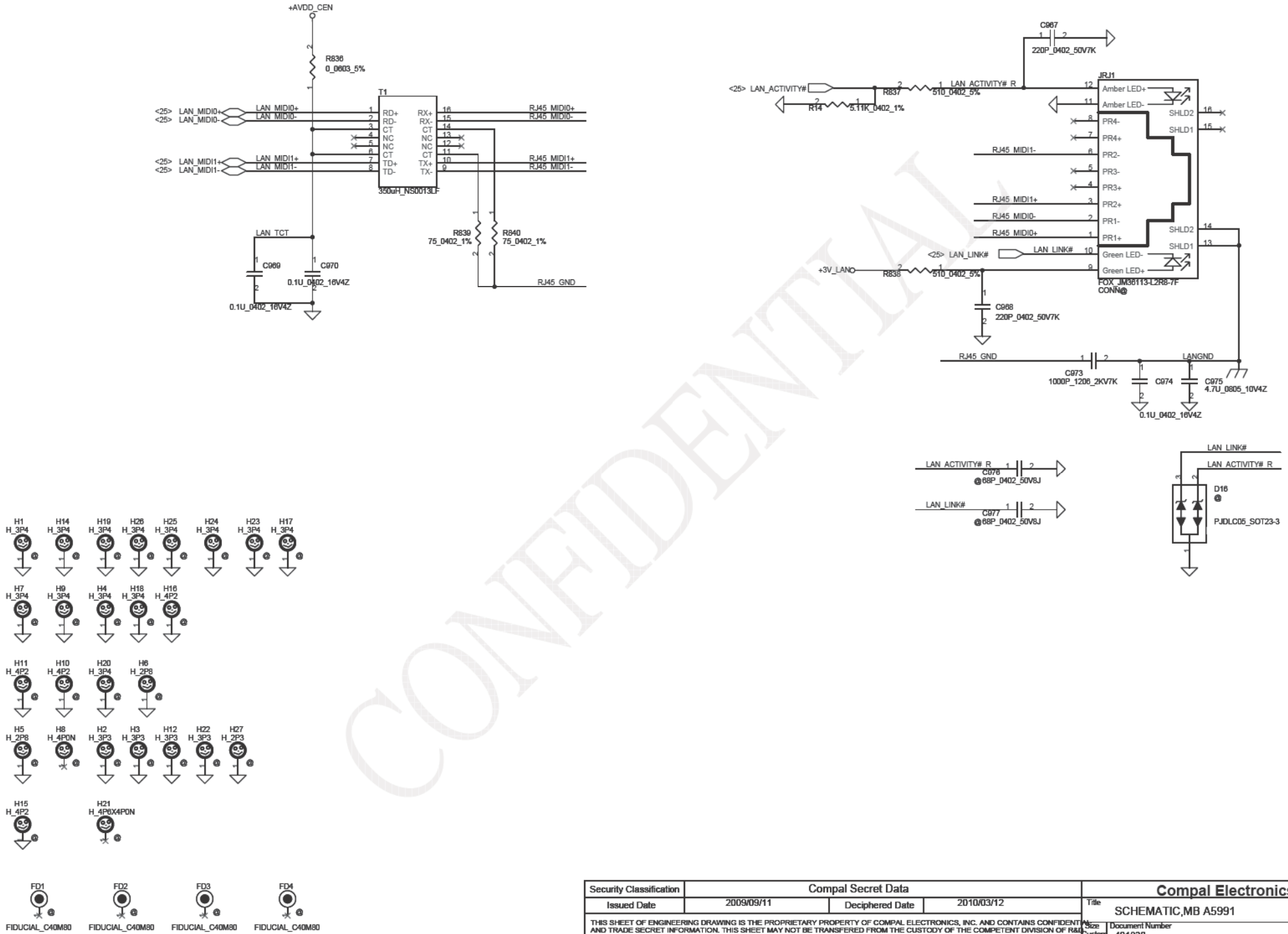

Security Classification	Compal Secret Data		
Issued Date	2009/09/11	Deciphered Date	2010/03/12

THIS SHEET OF ENGINEERING DRAWING IS THE PROPRIETARY PROPERTY OF COMPAL ELECTRONICS, INC. AND CONTAINS CONFIDENTIAL AND TRADE SECRET INFORMATION. THIS SHEET MAY NOT BE TRANSFERED FROM THE CUSTODY OF THE COMPETENT DIVISION OF R&D DEPARTMENT EXCEPT AS AUTHORIZED BY COMPAL ELECTRONICS, INC. NEITHER THIS SHEET NOR THE INFORMATION IT CONTAINS MAY BE USED BY OR DISCLOSED TO ANY THIRD PARTY WITHOUT PRIOR WRITTEN CONSENT OF COMPAL ELECTRONICS, INC.

Compal Electronics, Inc.

Title: SCHEMATIC,MB A5991

Size: Custom | Document Number: 401830 | Rev: A

Date: Thursday, October 15, 2009 | Sheet 26 of 47

CONFIDENTIAL

http://laptop-motherboard-schematic.blogspot.com/

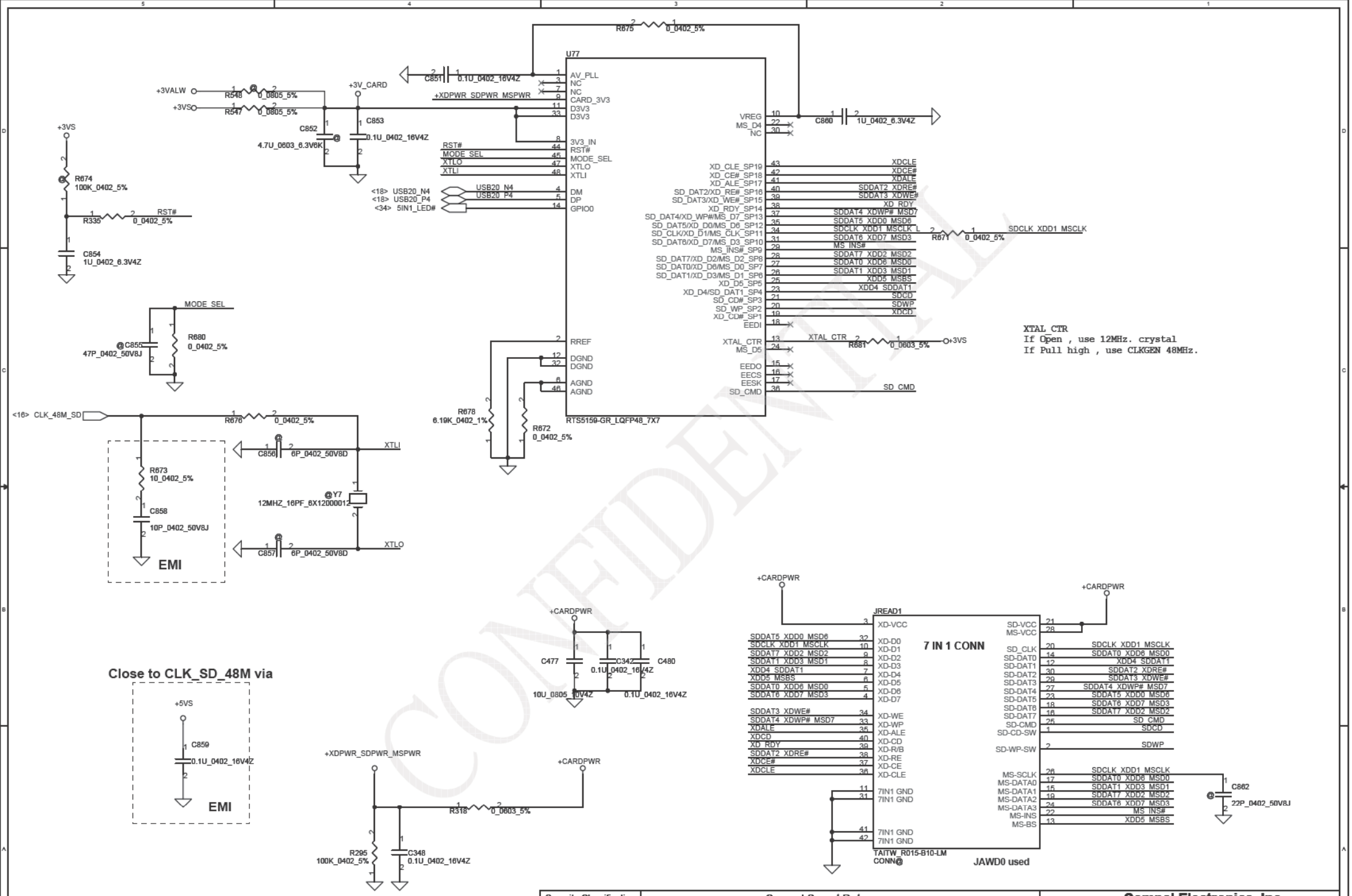

CONFIDENTIAL

Security Classification	Compal Secret Data		
Issued Date	2009/09/11	Deciphered Date	2010/03/12

THIS SHEET OF ENGINEERING DRAWING IS THE PROPRIETARY PROPERTY OF COMPAL ELECTRONICS, INC. AND CONTAINS CONFIDENTIAL AND TRADE SECRET INFORMATION. THIS SHEET MAY NOT BE TRANSFERED FROM THE CUSTODY OF THE COMPETENT DIVISION OF R&D DEPARTMENT EXCEPT AS AUTHORIZED BY COMPAL ELECTRONICS, INC. NEITHER THIS SHEET NOR THE INFORMATION IT CONTAINS MAY BE USED BY OR DISCLOSED TO ANY THIRD PARTY WITHOUT PRIOR WRITTEN CONSENT OF COMPAL ELECTRONICS, INC.

Compal Electronics, Inc.

Title: SCHEMATIC,MB A5991

Size: B | Document Number: 401830 | Rev: A

Date: Thursday, October 15, 2009 | Sheet 27 of 47

http://laptop-motherboard-schematic.blogspot.com/

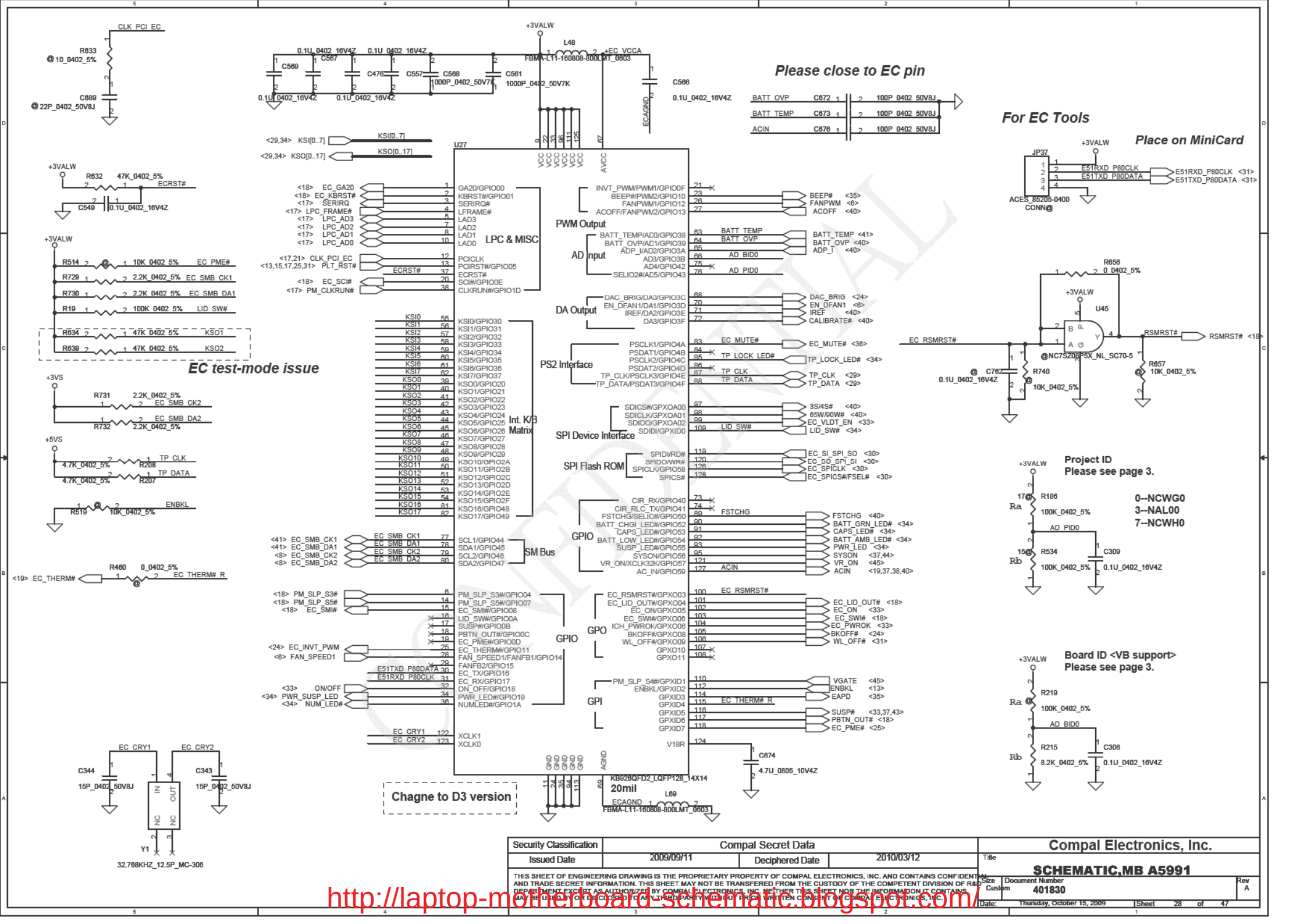

http://laptop-motherboard-schematic.blogspot.com/

For 17"

Left

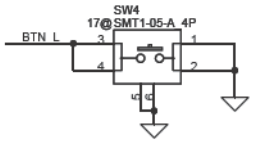

Right

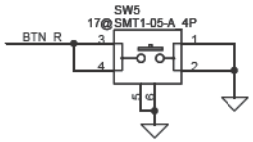

For 15"

Left

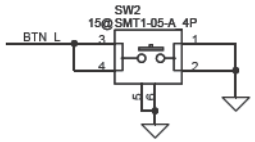

Right

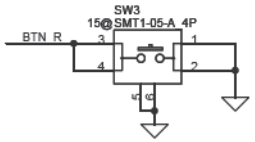

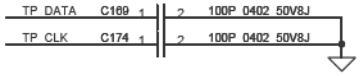

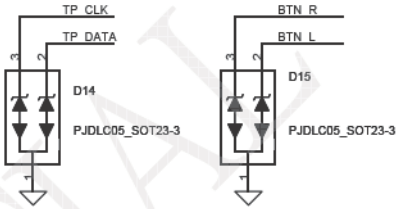

Change to SCA00000200

To TP/B Conn.

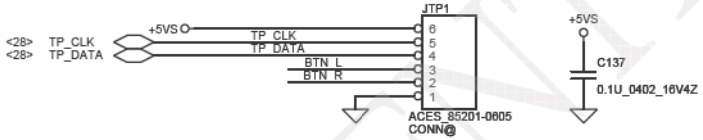

KALA0 used

INT_KBD Conn.

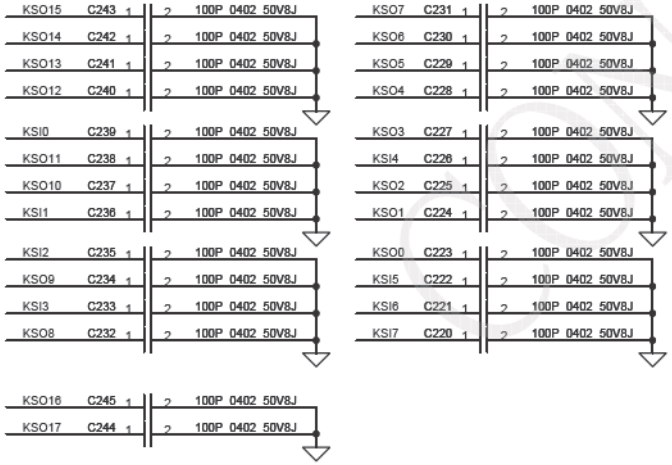

KB1 for 15"
KB2 for 17"

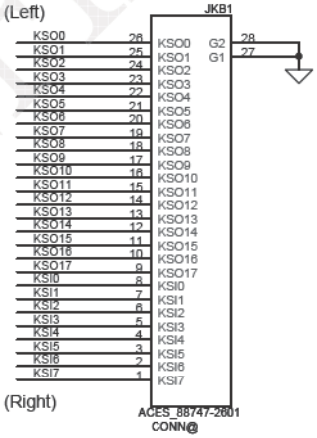

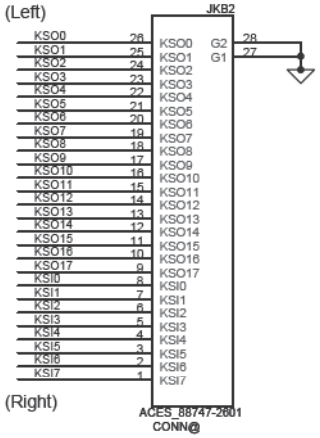

CONFIDENTIAL

Security Classification	Compal Secret Data			Compal Electronics, Inc.
Issued Date	2009/09/11	Deciphered Date	2010/03/12	Title: SCHEMATIC,MB A5991
				Size: Custom / Document Number: 401830 / Rev: A
				Date: Thursday, October 15, 2009 / Sheet 29 of 47

THIS SHEET OF ENGINEERING DRAWING IS THE PROPRIETARY PROPERTY OF COMPAL ELECTRONICS, INC. AND CONTAINS CONFIDENTIAL AND TRADE SECRET INFORMATION. THIS SHEET MAY NOT BE TRANSFERED FROM THE CUSTODY OF THE COMPETENT DIVISION OF R&D DEPARTMENT EXCEPT AS AUTHORIZED BY COMPAL ELECTRONICS, INC. NEITHER THIS SHEET NOR THE INFORMATION IT CONTAINS MAY BE USED BY OR DISCLOSED TO ANY THIRD PARTY WITHOUT PRIOR WRITTEN CONSENT OF COMPAL ELECTRONICS, INC.

http://laptop-motherboard-schematic.blogspot.com/

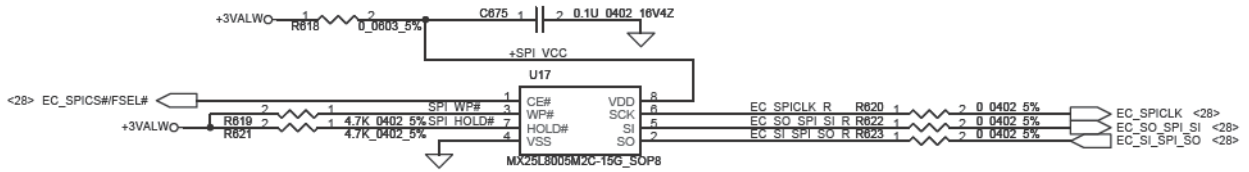

SA00000XT00 : S IC FL 8M MX25L8005M2C-15G SOP 8P
ENE suggestion SPI Frequency over 66MHz
SST: 50MHz
MXIC: 70MHz
ST: 40MHz

ONLY MXIC used in this project (66MHz)

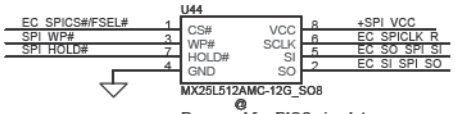

@
Reserved for BIOS simulator.
Footprint SO8

SPI ROM Footprint 150mil

CONFIDENTIAL

Security Classification	Compal Secret Data			Compal Electronics, Inc.
Issued Date	2009/09/11	Deciphered Date	2010/03/12	Title: SCHEMATIC,MB A5991
THIS SHEET OF ENGINEERING DRAWING IS THE PROPRIETARY PROPERTY OF COMPAL ELECTRONICS, INC. AND CONTAINS CONFIDENTIAL AND TRADE SECRET INFORMATION. THIS SHEET MAY NOT BE TRANSFERED FROM THE CUSTODY OF THE COMPETENT DIVISION OF R&D DEPARTMENT EXCEPT AS AUTHORIZED BY COMPAL ELECTRONICS, INC. NEITHER THIS SHEET NOR THE INFORMATION IT CONTAINS MAY BE USED BY OR DISCLOSED TO ANY THIRD PARTY WITHOUT PRIOR WRITTEN CONSENT OF COMPAL ELECTRONICS, INC.				Size: Custom; Document Number: 401830; Rev: A
				Date: Monday, October 19, 2009; Sheet 30 of 47

http://laptop-motherboard-schematic.blogspot.com/

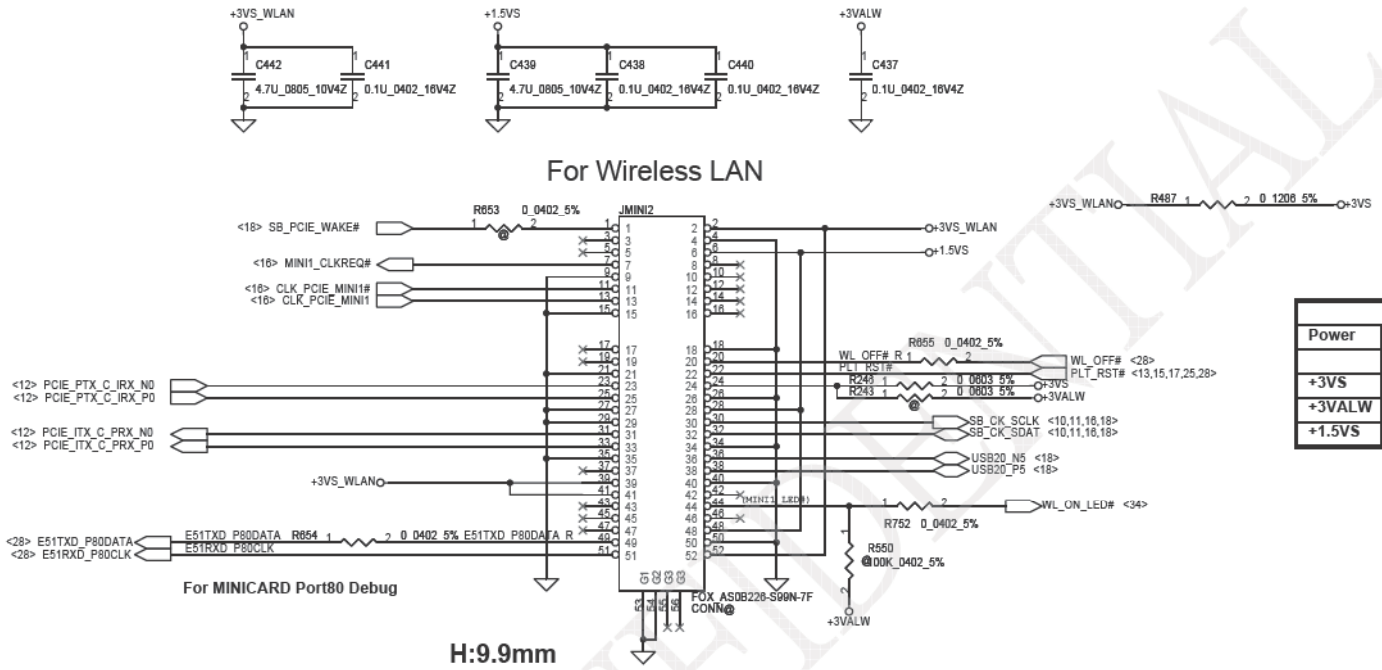

Mini Card Power Rating			
Power	Primary Power (mA)		Auxiliary Power (mA)
	Peak	Normal	Normal
+3VS	1000	750	
+3VALW	330	250	250 (wake enable)
+1.5VS	500	375	5 (Not wake enable)

CONFIDENTIAL

Security Classification	Compal Secret Data			Compal Electronics, Inc.
Issued Date	2009/09/11	Deciphered Date	2010/03/12	Title: SCHEMATIC,MB A5991

THIS SHEET OF ENGINEERING DRAWING IS THE PROPRIETARY PROPERTY OF COMPAL ELECTRONICS, INC. AND CONTAINS CONFIDENTIAL AND TRADE SECRET INFORMATION. THIS SHEET MAY NOT BE TRANSFERED FROM THE CUSTODY OF THE COMPETENT DIVISION OF R&D DEPARTMENT EXCEPT AS AUTHORIZED BY COMPAL ELECTRONICS, INC. NEITHER THIS SHEET NOR THE INFORMATION IT CONTAINS MAY BE USED BY OR DISCLOSED TO ANY THIRD PARTY WITHOUT PRIOR WRITTEN CONSENT OF COMPAL ELECTRONICS, INC.

Size	Document Number	Rev
B	401830	A

Date: Thursday, October 15, 2009 Sheet 31 of 47

http://laptop-motherboard-schematic.blogspot.com/

USB CONN. 1 & 2

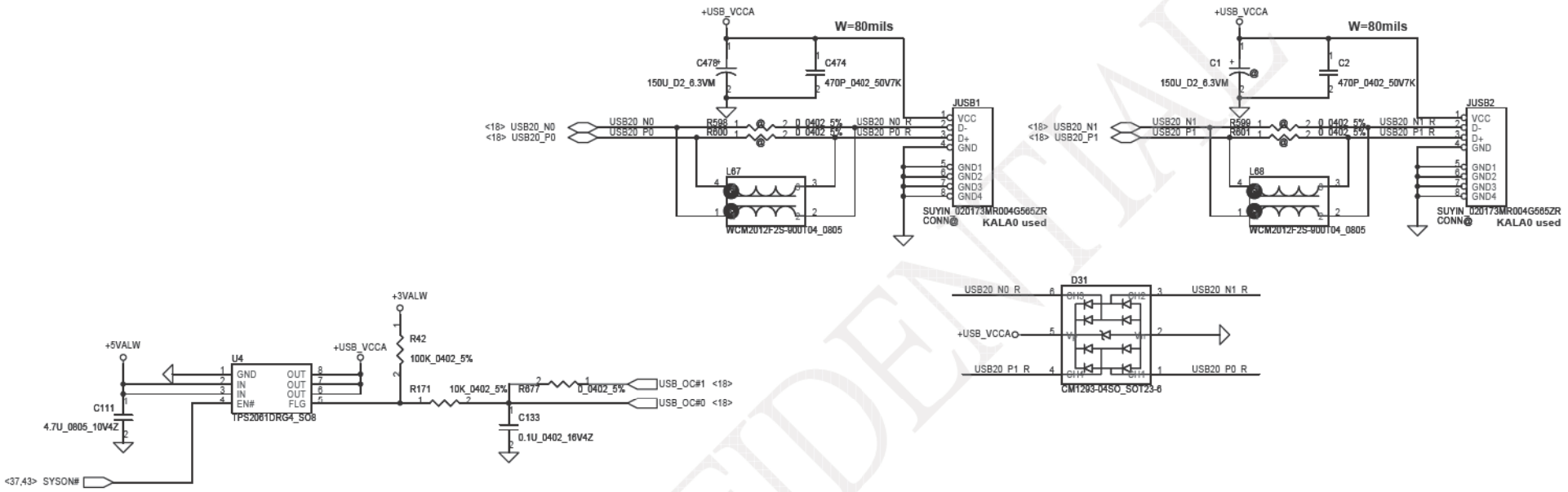

CONFIDENTIAL

Security Classification	Compal Secret Data			Compal Electronics, Inc.
Issued Date	2009/09/11	Deciphered Date	2010/03/12	Title: SCHEMATIC,MB A5991
				Size: B / Document Number: 401830 / Rev: A
				Date: Thursday, October 15, 2009 / Sheet 32 of 47

THIS SHEET OF ENGINEERING DRAWING IS THE PROPRIETARY PROPERTY OF COMPAL ELECTRONICS, INC. AND CONTAINS CONFIDENTIAL AND TRADE SECRET INFORMATION. THIS SHEET MAY NOT BE TRANSFERED FROM THE CUSTODY OF THE COMPETENT DIVISION OF R&D DEPARTMENT EXCEPT AS AUTHORIZED BY COMPAL ELECTRONICS, INC. NEITHER THIS SHEET NOR THE INFORMATION IT CONTAINS MAY BE USED BY OR DISCLOSED TO ANY THIRD PARTY WITHOUT PRIOR WRITTEN CONSENT OF COMPAL ELECTRONICS, INC.

http://laptop-motherboard-schematic.blogspot.com/

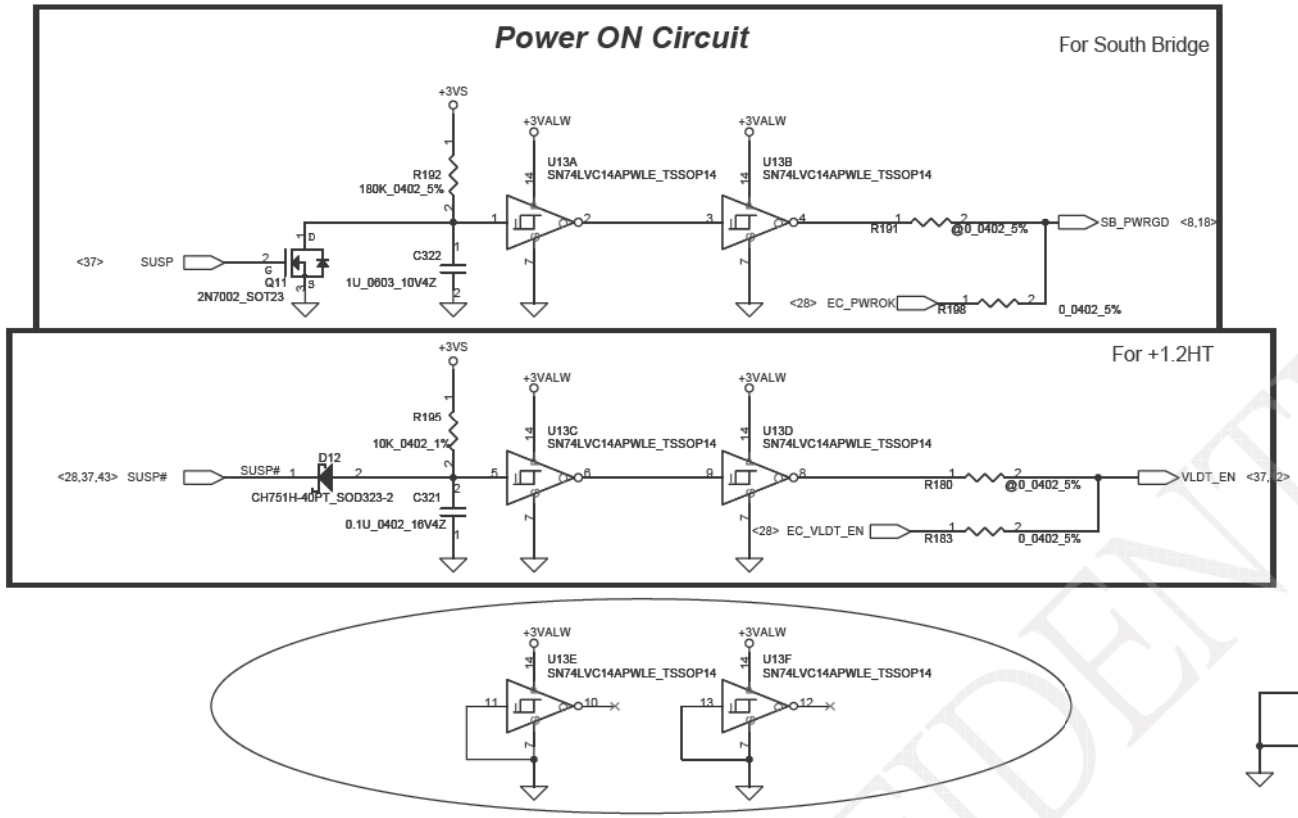

note:T1 minimum 15ms,T2 minimum 33ms/maximum 500ms, SUSP# goes to low after SB_PWRGD goes to low for power down.

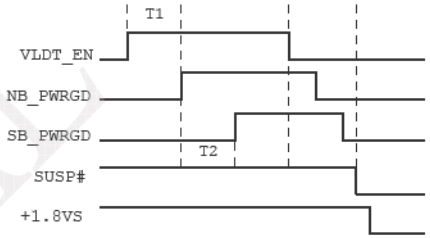

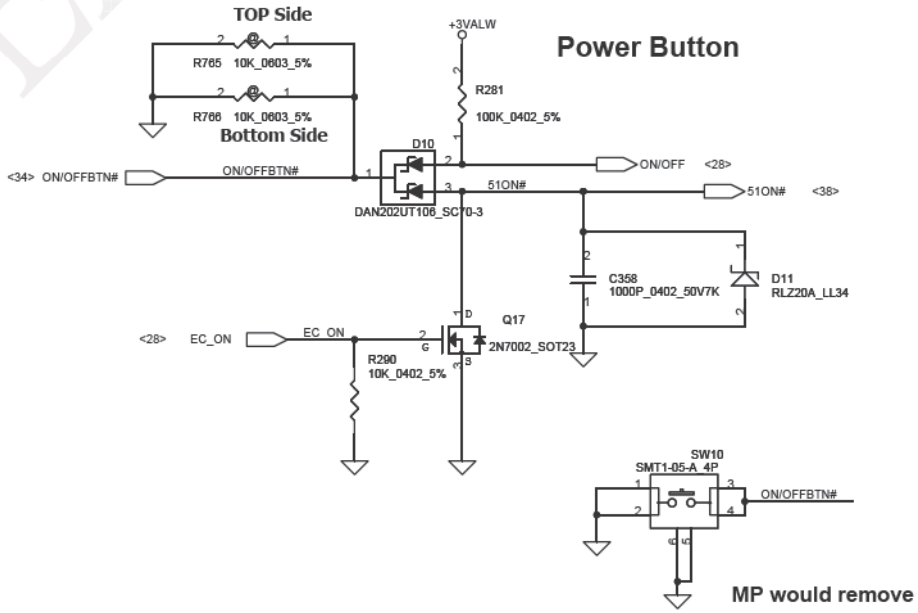

MP would remove

CONFIDENTIAL

Security Classification	Compal Secret Data			Compal Electronics, Inc.
Issued Date	2009/09/11	Deciphered Date	2010/03/12	Title: SCHEMATIC,MB A5991

THIS SHEET OF ENGINEERING DRAWING IS THE PROPRIETARY PROPERTY OF COMPAL ELECTRONICS, INC. AND CONTAINS CONFIDENTIAL AND TRADE SECRET INFORMATION. THIS SHEET MAY NOT BE TRANSFERED FROM THE CUSTODY OF THE COMPETENT DIVISION OF R&D DEPARTMENT EXCEPT AS AUTHORIZED BY COMPAL ELECTRONICS, INC. NEITHER THIS SHEET NOR THE INFORMATION IT CONTAINS MAY BE USED BY OR DISCLOSED TO ANY THIRD PARTY WITHOUT PRIOR WRITTEN CONSENT OF COMPAL ELECTRONICS, INC.

Size	Document Number	Rev
B	401830	A

Date: Monday, October 19, 2009 | Sheet 33 of 47

http://laptop-motherboard-schematic.blogspot.com/

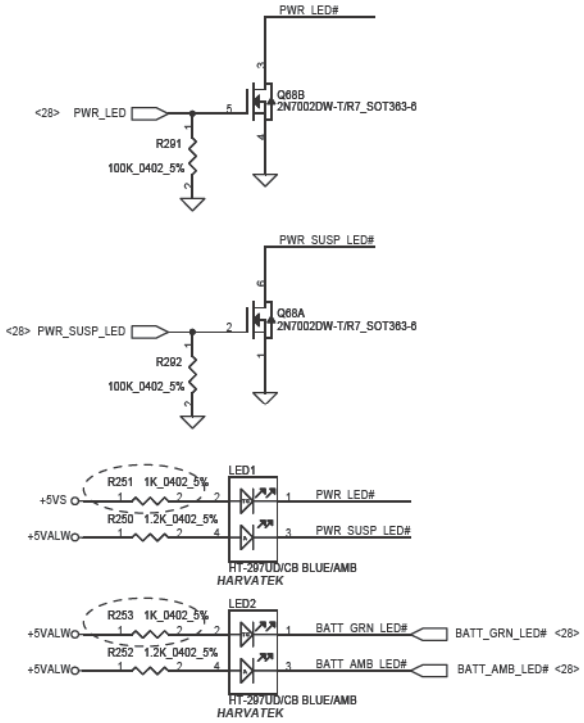

BLUE/AMB LED

MDC Conn.

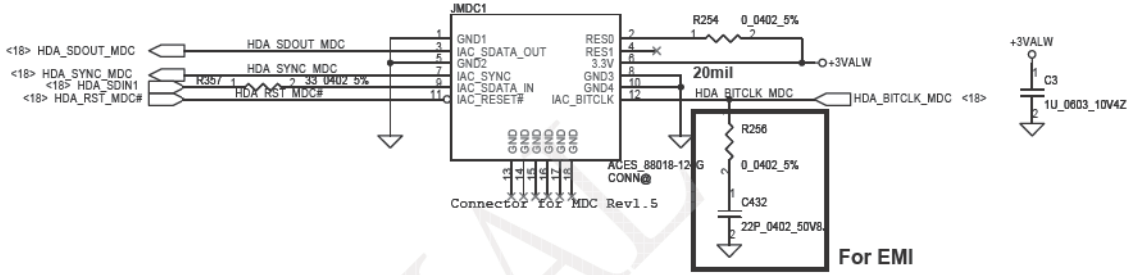

To PWR LED/B

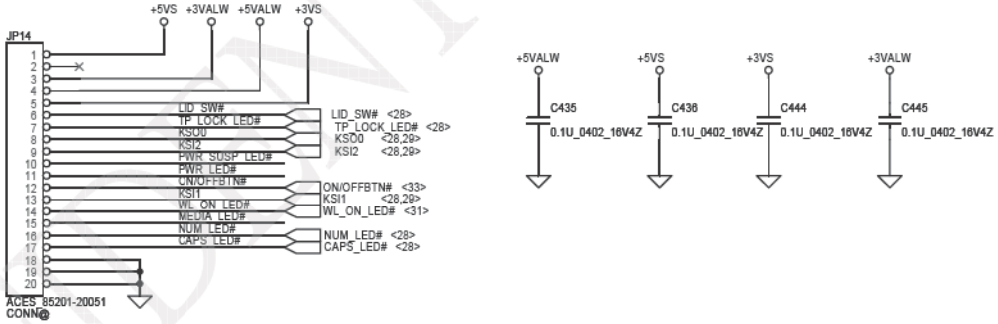

	KSO0
KSI1	WL_BTN#
KSI2	TP_LOCK_BTN#
KSI3	
KSI4	
KSI5	
KSI6	

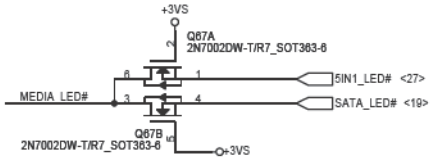

CONFIDENTIAL

Security Classification	Compal Secret Data			Compal Electronics, Inc.
Issued Date	2009/09/11	Deciphered Date	2010/03/12	Title: SCHEMATIC,MB A5991
				Size: B / Document Number: 401830 / Rev: A
				Date: Thursday, October 15, 2009 / Sheet 34 of 47

THIS SHEET OF ENGINEERING DRAWING IS THE PROPRIETARY PROPERTY OF COMPAL ELECTRONICS, INC. AND CONTAINS CONFIDENTIAL AND TRADE SECRET INFORMATION. THIS SHEET MAY NOT BE TRANSFERRED FROM THE CUSTODY OF THE COMPETENT DIVISION OF R&D DEPARTMENT EXCEPT AS AUTHORIZED BY COMPAL ELECTRONICS, INC. NEITHER THIS SHEET NOR THE INFORMATION IT CONTAINS MAY BE USED BY OR DISCLOSED TO ANY THIRD PARTY WITHOUT PRIOR WRITTEN CONSENT OF COMPAL ELECTRONICS, INC.

http://laptop-motherboard-schematic.blogspot.com/

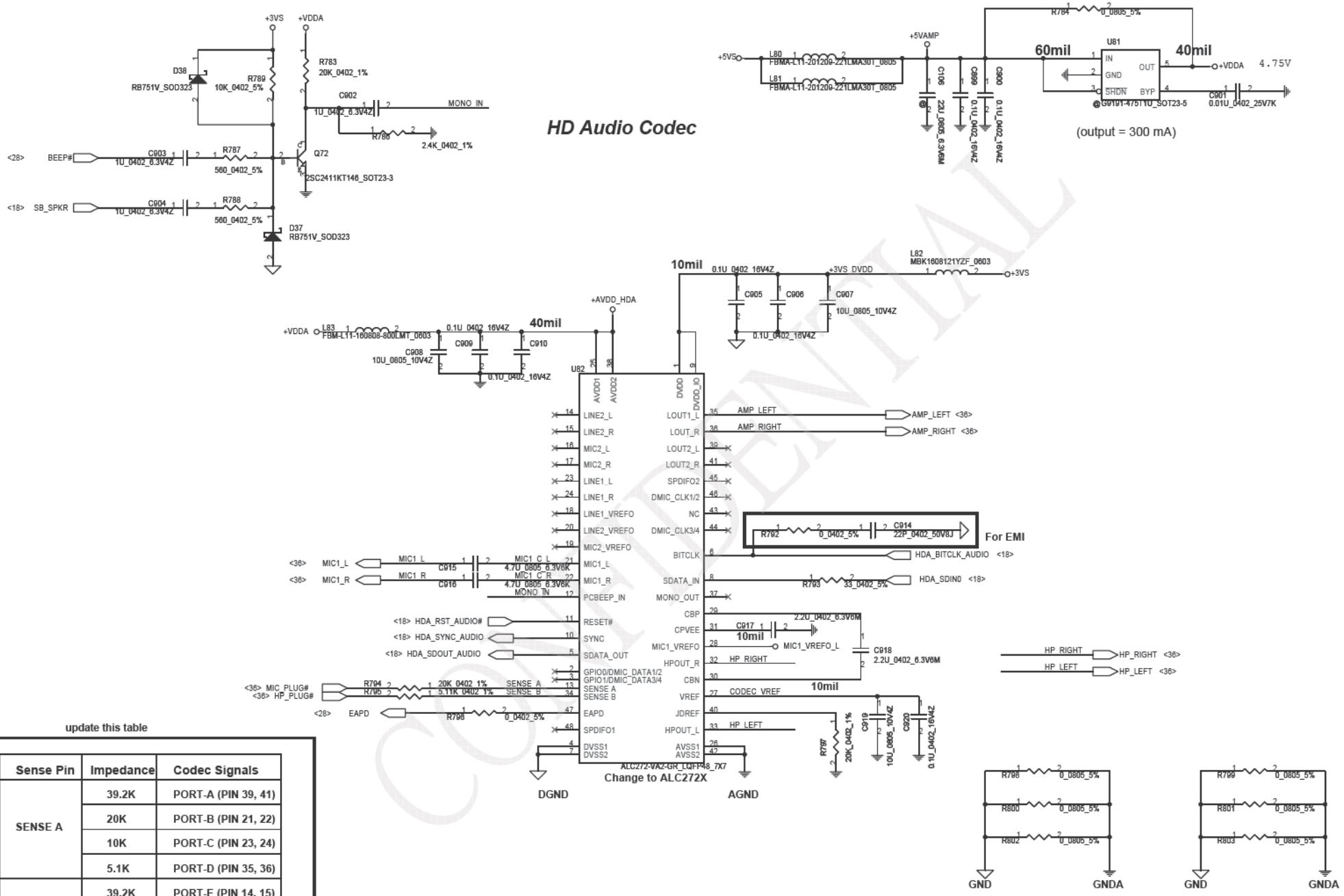

update this table

Sense Pin	Impedance	Codec Signals
SENSE A	39.2K	PORT-A (PIN 39, 41)
	20K	PORT-B (PIN 21, 22)
	10K	PORT-C (PIN 23, 24)
	5.1K	PORT-D (PIN 35, 36)
SENSE B	39.2K	PORT-E (PIN 14, 15)
	20K	PORT-F (PIN 16, 17)
	10K	PORT-G (PIN 43, 44)
	5.1K	PORT-H (PIN 45, 46)

Security Classification	Compal Secret Data			Compal Electronics, Inc.
Issued Date	2009/09/11	Deciphered Date	2010/03/12	Title: SCHEMATIC,MB A5991
				Size: B / Document Number: 401830 / Rev: A
				Date: Thursday, October 15, 2009 / Sheet 35 of 47

THIS SHEET OF ENGINEERING DRAWING IS THE PROPRIETARY PROPERTY OF COMPAL ELECTRONICS, INC. AND CONTAINS CONFIDENTIAL AND TRADE SECRET INFORMATION. THIS SHEET MAY NOT BE TRANSFERED FROM THE CUSTODY OF THE COMPETENT DIVISION OF RAD DEPARTMENT EXCEPT AS AUTHORIZED BY COMPAL ELECTRONICS, INC. NEITHER THIS SHEET NOR THE INFORMATION IT CONTAINS MAY BE USED BY OR DISCLOSED TO ANY THIRD PARTY WITHOUT PRIOR WRITTEN CONSENT OF COMPAL ELECTRONICS, INC.

CONFIDENTIAL

http://laptop-motherboard-schematic.blogspot.com/

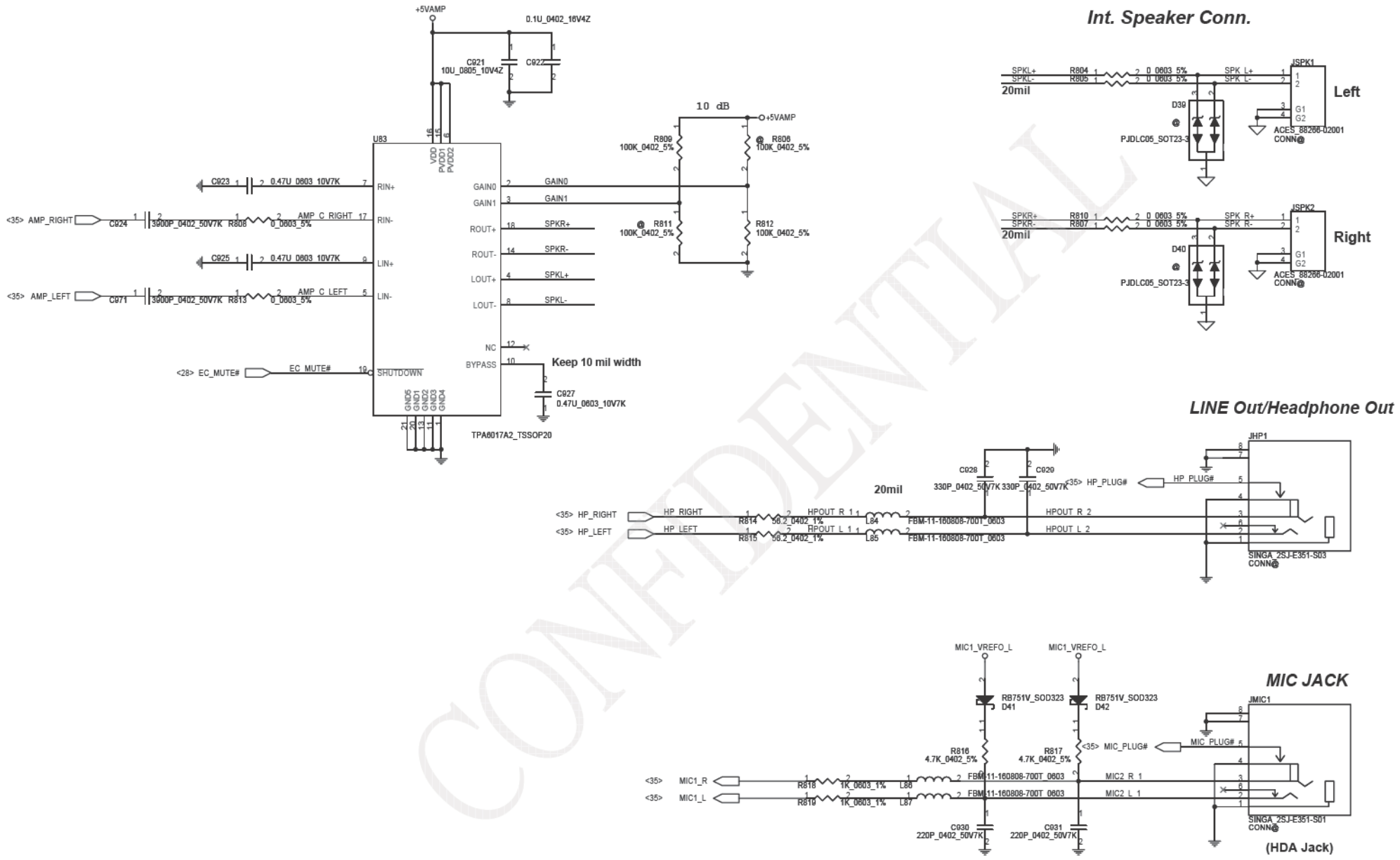

CONFIDENTIAL

Security Classification	Compal Secret Data			Compal Electronics, Inc.
Issued Date	2009/09/11	Deciphered Date	2010/03/12	Title: SCHEMATIC,MB A5991
Size: B	Document Number: 401830			Rev: A
Date: Thursday, October 15, 2009	Sheet 36 of 47			

THIS SHEET OF ENGINEERING DRAWING IS THE PROPRIETARY PROPERTY OF COMPAL ELECTRONICS, INC. AND CONTAINS CONFIDENTIAL AND TRADE SECRET INFORMATION. THIS SHEET MAY NOT BE TRANSFERED FROM THE CUSTODY OF THE COMPETENT DIVISION OF R&D DEPARTMENT EXCEPT AS AUTHORIZED BY COMPAL ELECTRONICS, INC. NEITHER THIS SHEET NOR THE INFORMATION IT CONTAINS MAY BE USED BY OR DISCLOSED TO ANY THIRD PARTY WITHOUT PRIOR WRITTEN CONSENT OF COMPAL ELECTRONICS, INC.

http://laptop-motherboard-schematic.blogspot.com/

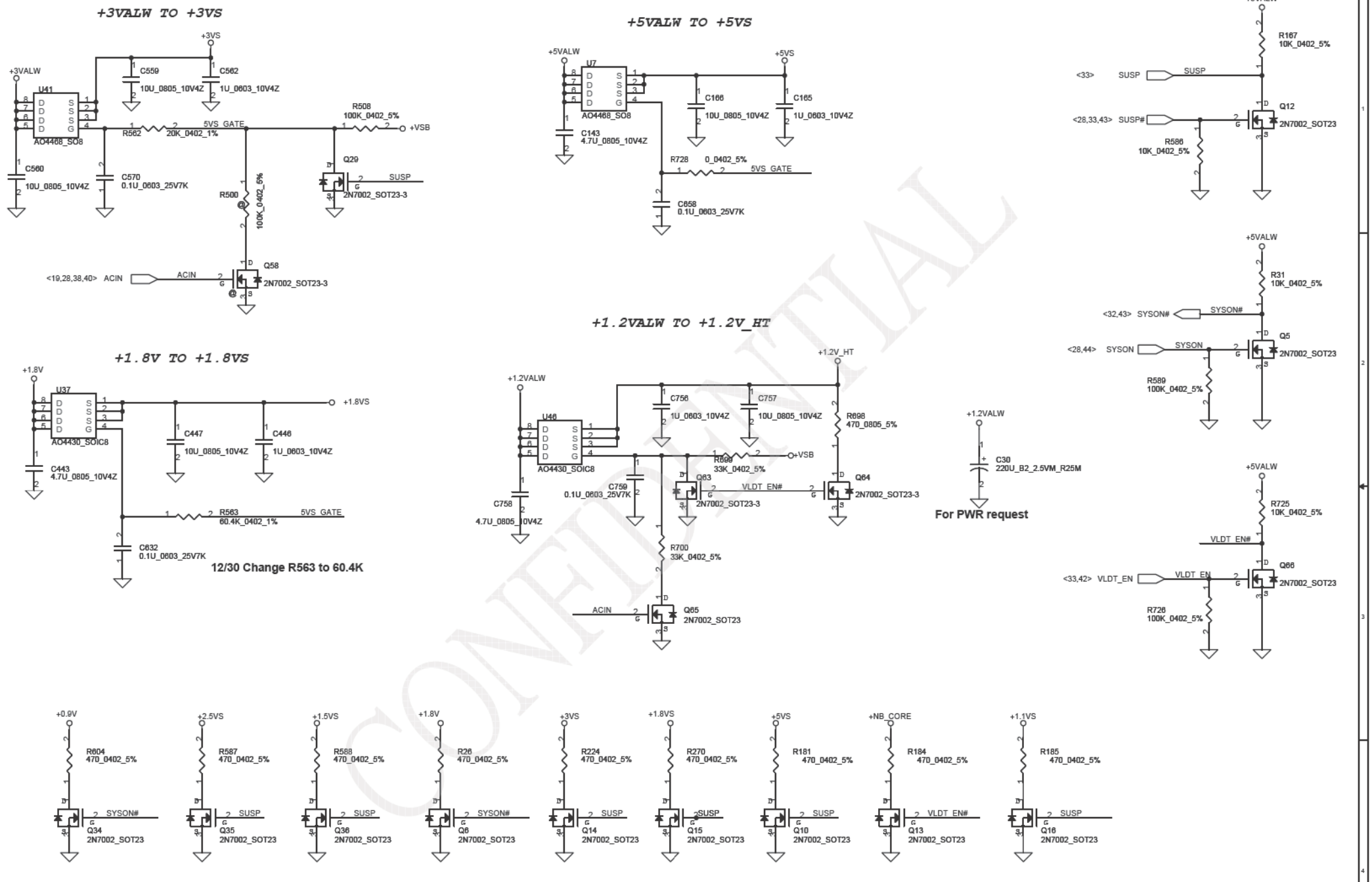

CONFIDENTIAL

Security Classification	Compal Secret Data		
Issued Date	2009/09/11	Deciphered Date	2010/03/12

THIS SHEET OF ENGINEERING DRAWING IS THE PROPRIETARY PROPERTY OF COMPAL ELECTRONICS, INC. AND CONTAINS CONFIDENTIAL AND TRADE SECRET INFORMATION. THIS SHEET MAY NOT BE TRANSFERED FROM THE CUSTODY OF THE COMPETENT DIVISION OF R&D DEPARTMENT EXCEPT AS AUTHORIZED BY COMPAL ELECTRONICS, INC. NEITHER THIS SHEET NOR THE INFORMATION IT CONTAINS MAY BE USED BY OR DISCLOSED TO ANY THIRD PARTY WITHOUT PRIOR WRITTEN CONSENT OF COMPAL ELECTRONICS, INC.

Compal Electronics, Inc.

Title: SCHEMATIC,MB A5991

Size: B | Document Number: 401830 | Rev: A

Date: Monday, October 19, 2009 | Sheet 37 of 47

http://laptop-motherboard-schematic.blogspot.com/

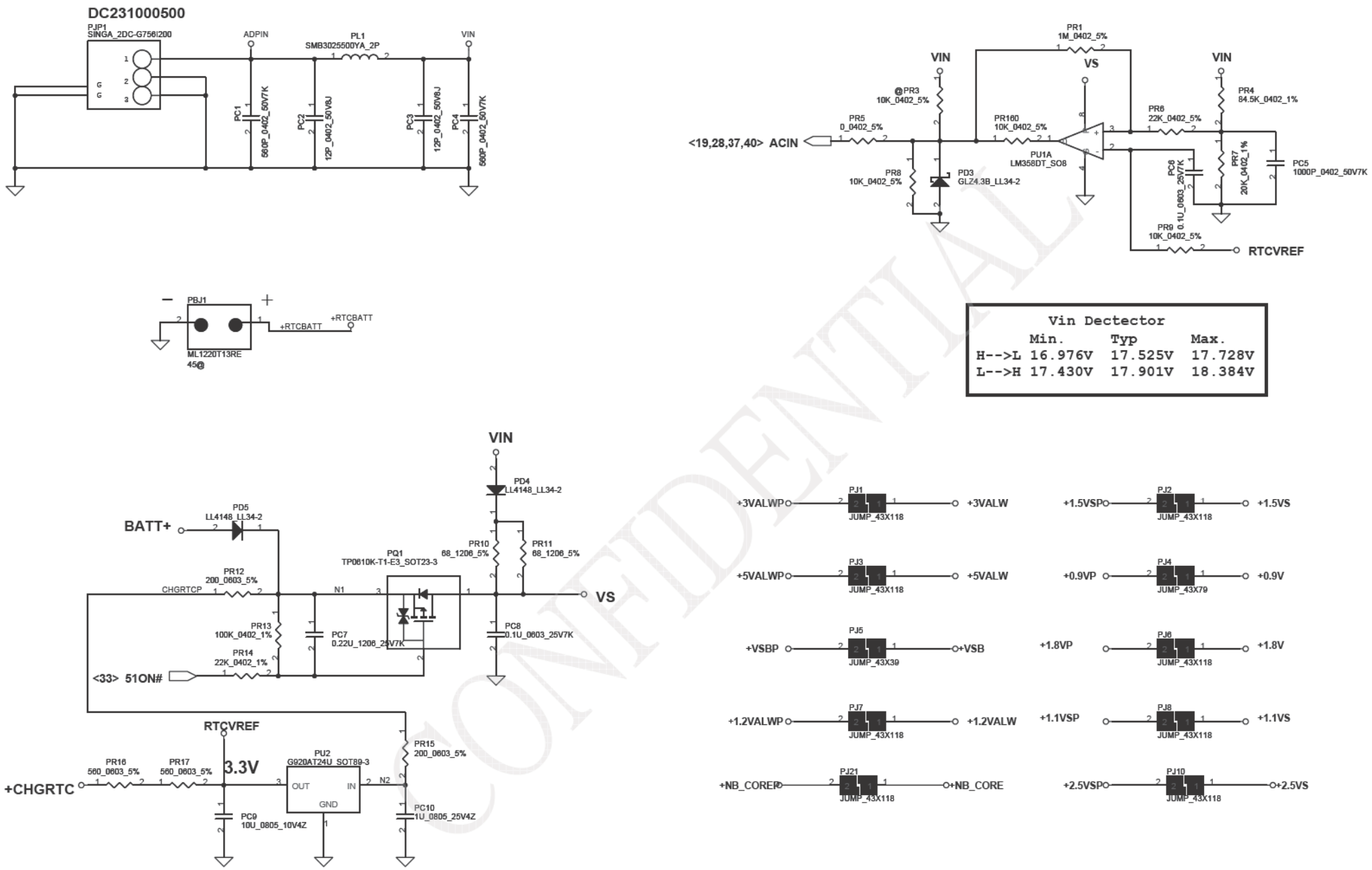

CONFIDENTIAL

Security Classification	Compal Secret Data			Compal Electronics, Inc.
Issued Date	2008/06/11	Deciphered Date	2010/03/12	Title: SCHEMATIC,MB A5991
				Size: B / Document Number: 401830 / Rev: A
				Date: Monday, October 19, 2009 / Sheet 38 of 47

THIS SHEET OF ENGINEERING DRAWING IS THE PROPRIETARY PROPERTY OF COMPAL ELECTRONICS, INC. AND CONTAINS CONFIDENTIAL AND TRADE SECRET INFORMATION. THIS SHEET MAY NOT BE TRANSFERED FROM THE CUSTODY OF THE COMPETENT DIVISION OF R&D DEPARTMENT EXCEPT AS AUTHORIZED BY COMPAL ELECTRONICS, INC. NEITHER THIS SHEET NOR THE INFORMATION IT CONTAINS MAY BE USED BY OR DISCLOSED TO ANY THIRD PARTY WITHOUT PRIOR WRITTEN CONSENT OF COMPAL ELECTRONICS, INC.
http://laptop-motherboardschematic.blogspot.com/

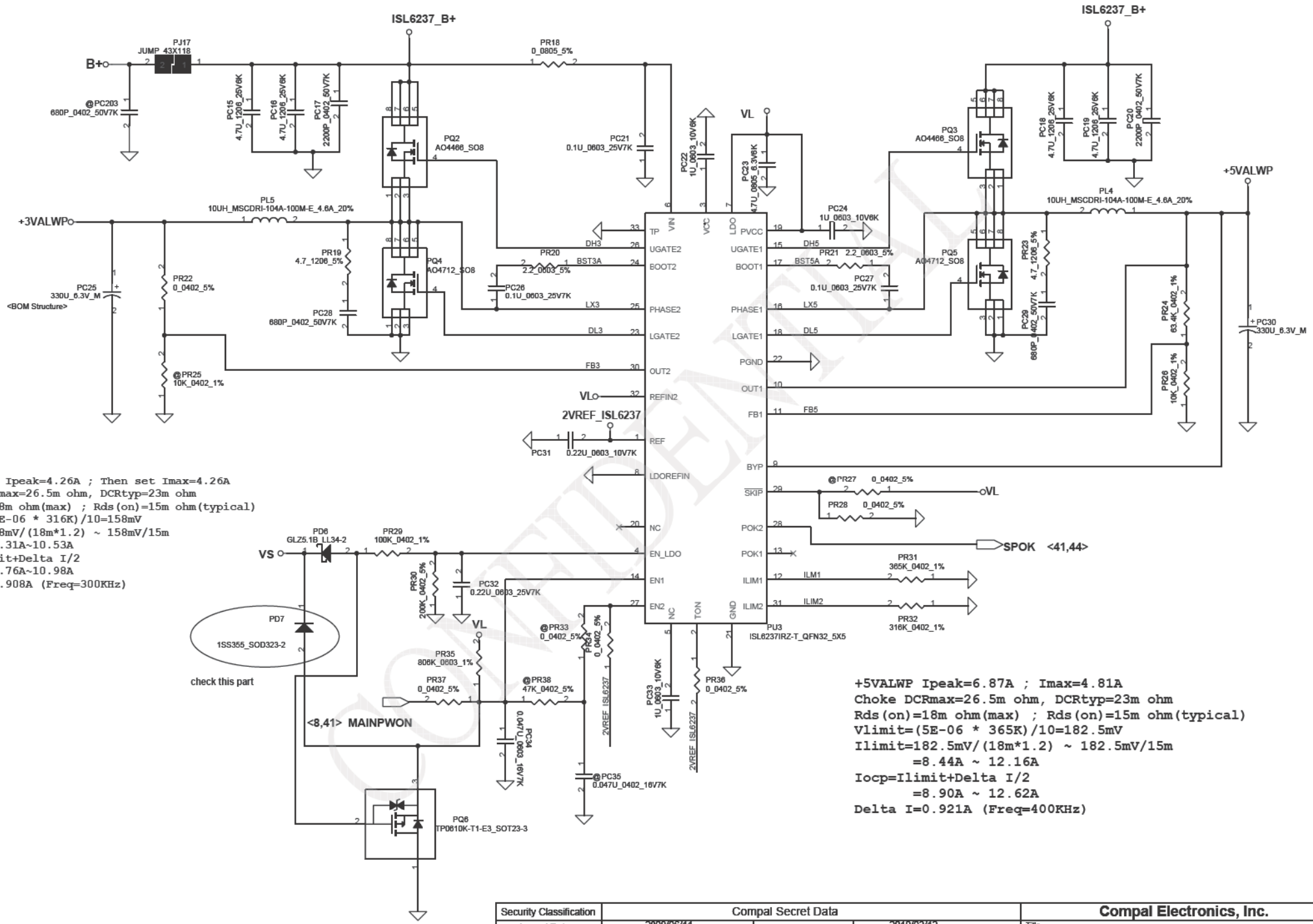

Security Classification	Compal Secret Data			Compal Electronics, Inc.
Issued Date	2008/06/11	Deciphered Date	2010/03/12	Title: SCHEMATIC,MB A5991
				Size: Custom / Document Number: 401830 / Rev: A
				Date: Monday, October 19, 2009 / Sheet 39 of 47

THIS SHEET OF ENGINEERING DRAWING IS THE PROPRIETARY PROPERTY OF COMPAL ELECTRONICS, INC. AND CONTAINS CONFIDENTIAL AND TRADE SECRET INFORMATION. THIS SHEET MAY NOT BE TRANSFERED FROM THE CUSTODY OF THE COMPETENT DIVISION OF R&D DEPARTMENT EXCEPT AS AUTHORIZED BY COMPAL ELECTRONICS, INC. NEITHER THIS SHEET NOR THE INFORMATION IT CONTAINS MAY BE USED BY OR DISCLOSED TO ANY THIRD PARTY WITHOUT PRIOR WRITTEN CONSENT OF COMPAL ELECTRONICS, INC.

http://laptop-motherboard-schematic.blogspot.com/

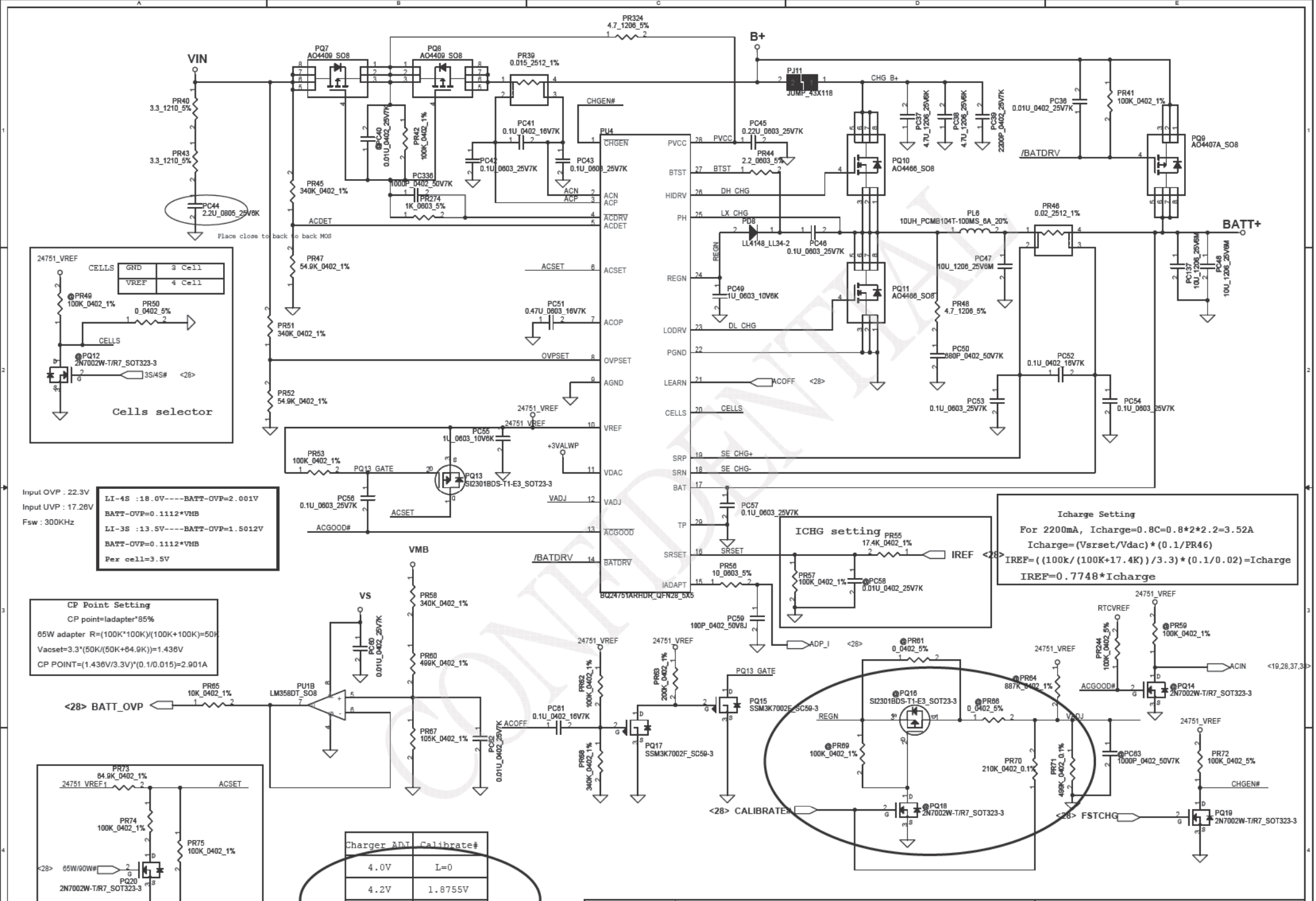

http://laptop-motherboard-schematic.blogspot.com/

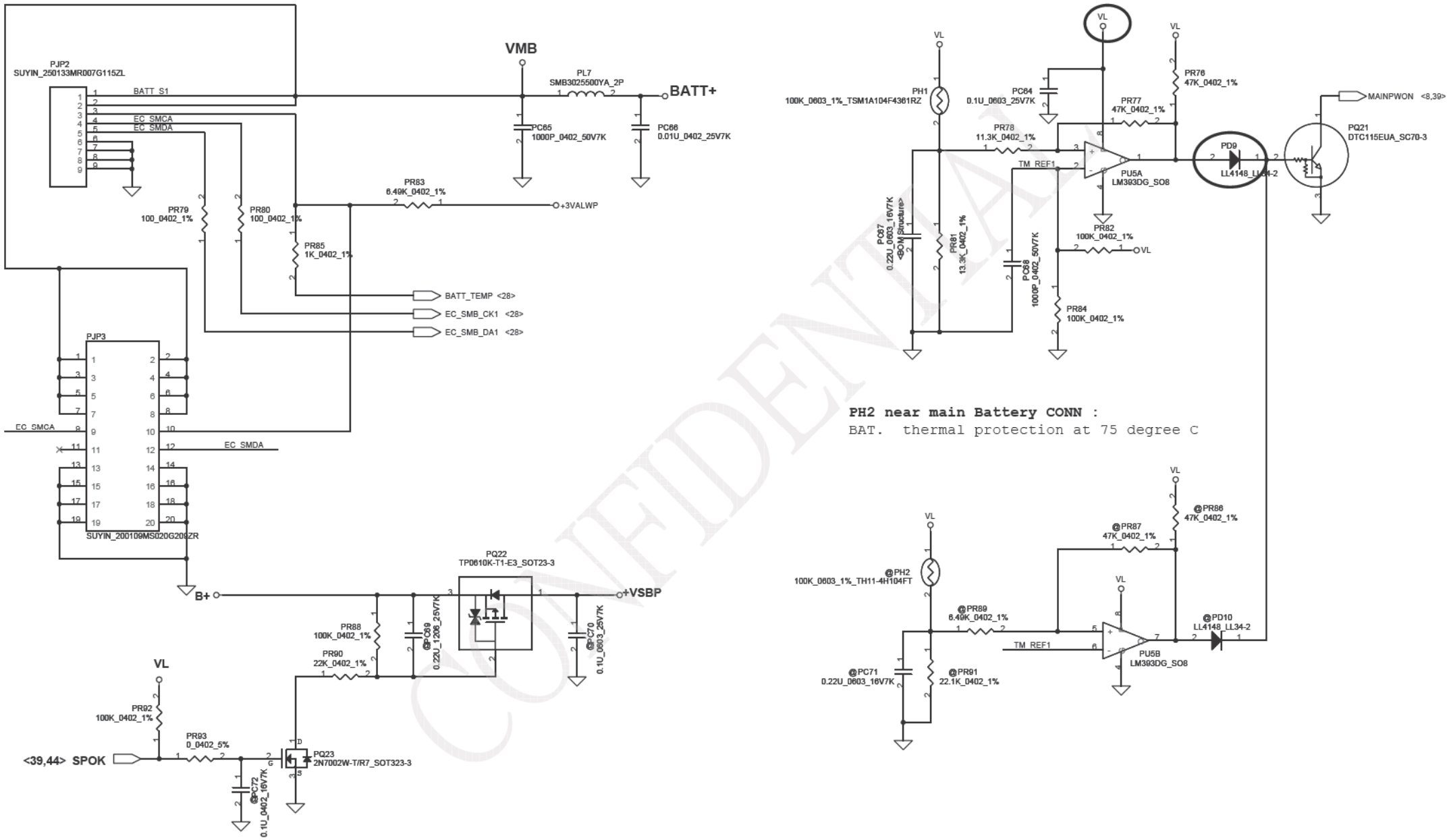

CONFIDENTIAL

Security Classification	Compal Secret Data		Compal Electronics, Inc.
Issued Date	2009/09/11	Deciphered Date 2010/03/12	Title: SCHEMATIC,MB A5991
			Size: B / Document Number: 401830 / Rev: A
			Date: Monday, October 19, 2009 / Sheet 41 of 47

THIS SHEET OF ENGINEERING DRAWING IS THE PROPRIETARY PROPERTY OF COMPAL ELECTRONICS, INC. AND CONTAINS CONFIDENTIAL AND TRADE SECRET INFORMATION. THIS SHEET MAY NOT BE TRANSFERED FROM THE CUSTODY OF THE COMPETENT DIVISION OF R&D DEPARTMENT EXCEPT AS AUTHORIZED BY COMPAL ELECTRONICS, INC. NEITHER THIS SHEET NOR THE INFORMATION IT CONTAINS MAY BE USED BY OR DISCLOSED TO ANY THIRD PARTY WITHOUT PRIOR WRITTEN CONSENT OF COMPAL ELECTRONICS, INC.

http://laptop-motherboardschematic.blogspot.com/

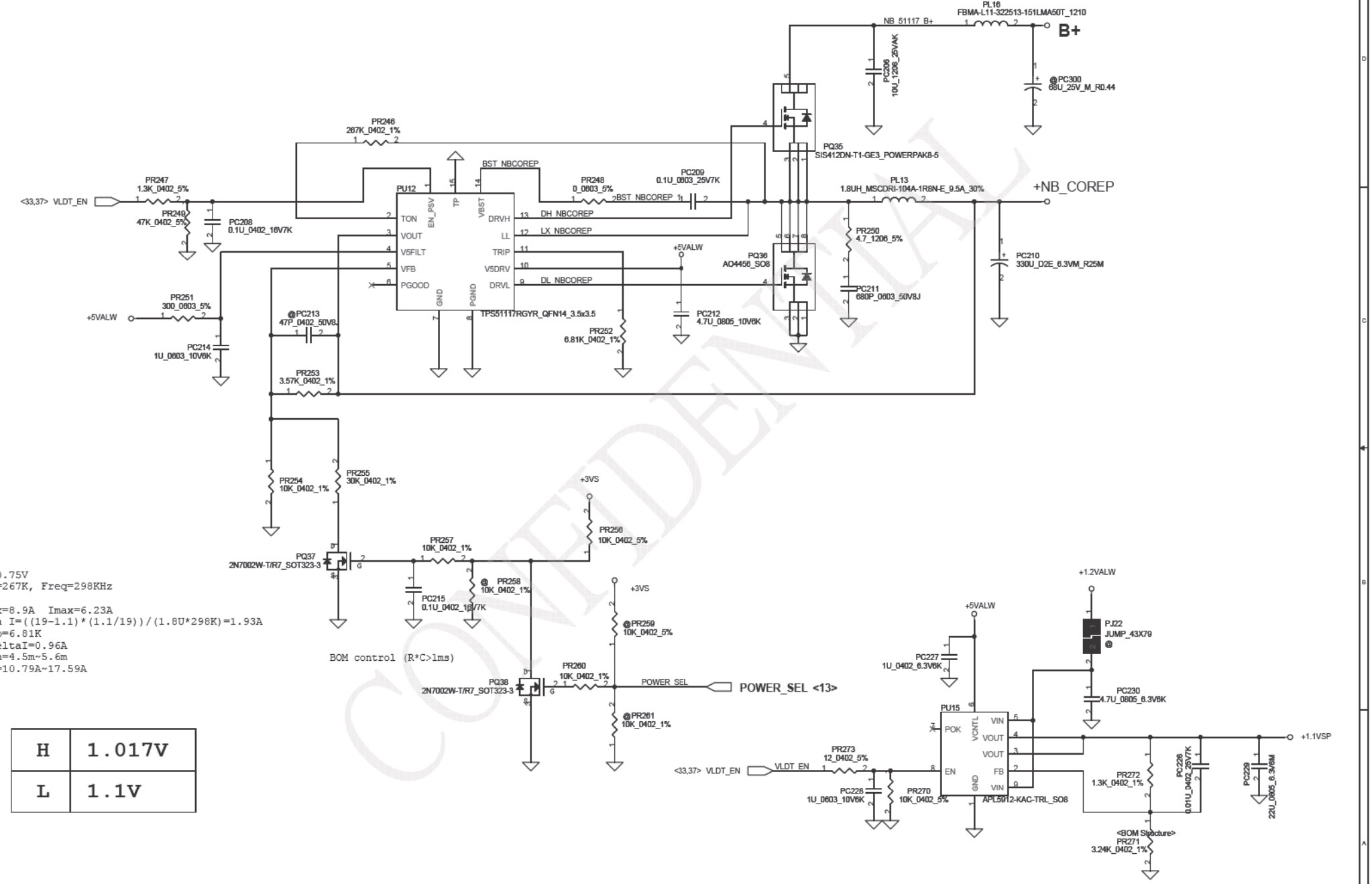

VFB=0.75V
Rton=267K, Freq=298KHz

Ipeak=8.9A Imax=6.23A
Delta I=((19-1.1)*(1.1/19))/(1.8U*298K)=1.93A
Rtrip=6.81K
1/2DeltaI=0.96A
Rdson=4.5m~5.6m
Iocp=10.79A~17.59A

H	1.017V
L	1.1V

CONFIDENTIAL

Security Classification	Compal Secret Data		
Issued Date	2008/11/03	Deciphered Date	2010/03/12

THIS SHEET OF ENGINEERING DRAWING IS THE PROPRIETARY PROPERTY OF COMPAL ELECTRONICS, INC. AND CONTAINS CONFIDENTIAL AND TRADE SECRET INFORMATION. THIS SHEET MAY NOT BE TRANSFERED FROM THE CUSTODY OF THE COMPETENT DIVISION OF R&D DEPARTMENT EXCEPT AS AUTHORIZED BY COMPAL ELECTRONICS, INC. NEITHER THIS SHEET NOR THE INFORMATION IT CONTAINS MAY BE USED BY OR DISCLOSED TO ANY THIRD PARTY WITHOUT PRIOR WRITTEN CONSENT OF COMPAL ELECTRONICS, INC.

Compal Electronics, Inc.

Title: SCHEMATIC,MB A5991

Size: D | Document Number: 401830 | Rev: A

Date: Monday, October 19, 2009 | Sheet 42 of 47

http://laptop-motherboard-schematic.com/

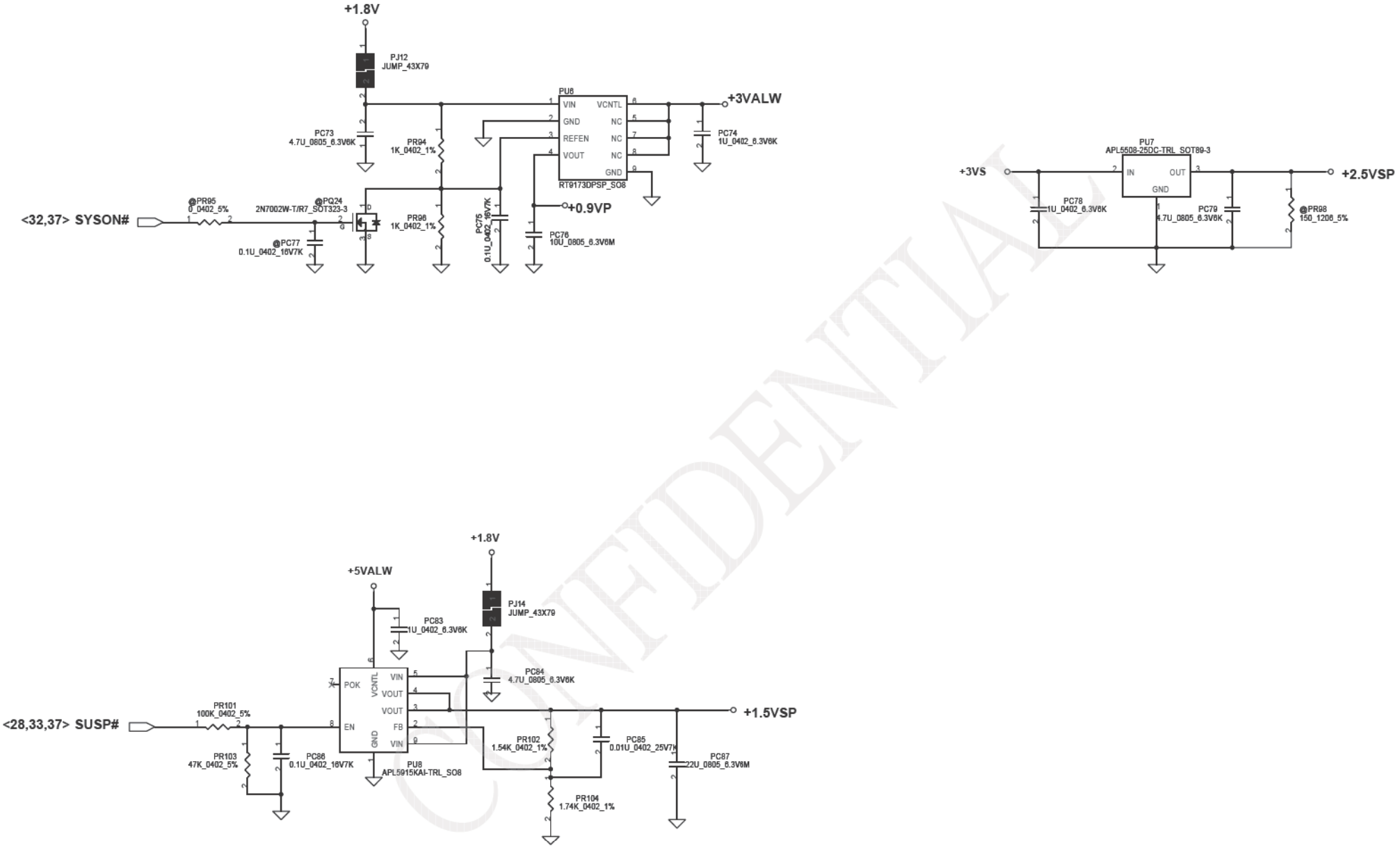

CONFIDENTIAL

Security Classification	Compal Secret Data			Compal Electronics, Inc.
Issued Date	2008/06/11	Deciphered Date	2010/03/12	Title: SCHEMATIC,MB A5991
THIS SHEET OF ENGINEERING DRAWING IS THE PROPRIETARY PROPERTY OF COMPAL ELECTRONICS, INC. AND CONTAINS CONFIDENTIAL AND TRADE SECRET INFORMATION. THIS SHEET MAY NOT BE TRANSFERED FROM THE CUSTODY OF THE COMPETENT DIVISION OF R&D DEPARTMENT EXCEPT AS AUTHORIZED BY COMPAL ELECTRONICS, INC. NEITHER THIS SHEET NOR THE INFORMATION IT CONTAINS MAY BE USED BY OR DISCLOSED TO ANY THIRD PARTY WITHOUT PRIOR WRITTEN CONSENT OF COMPAL ELECTRONICS, INC.				Size: Custom / Document Number: 401830 / Rev: A
				Date: Monday, October 19, 2009 / Sheet 43 of 47

http://laptop-motherboard-schematic.blogspot.com/

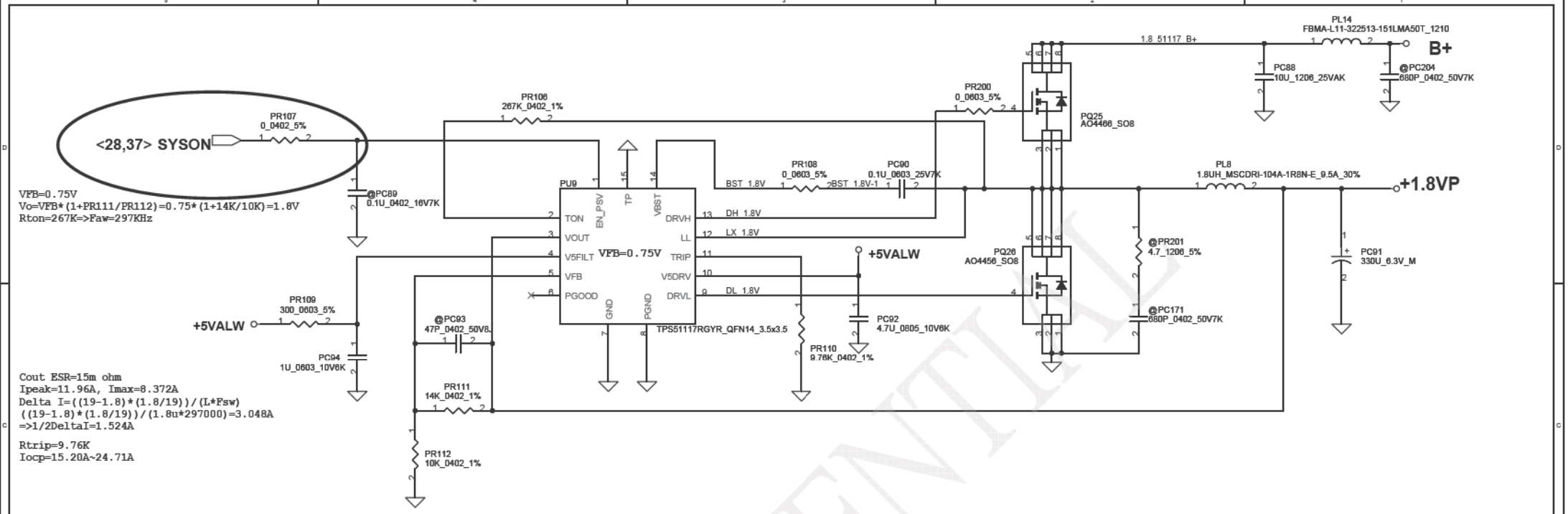

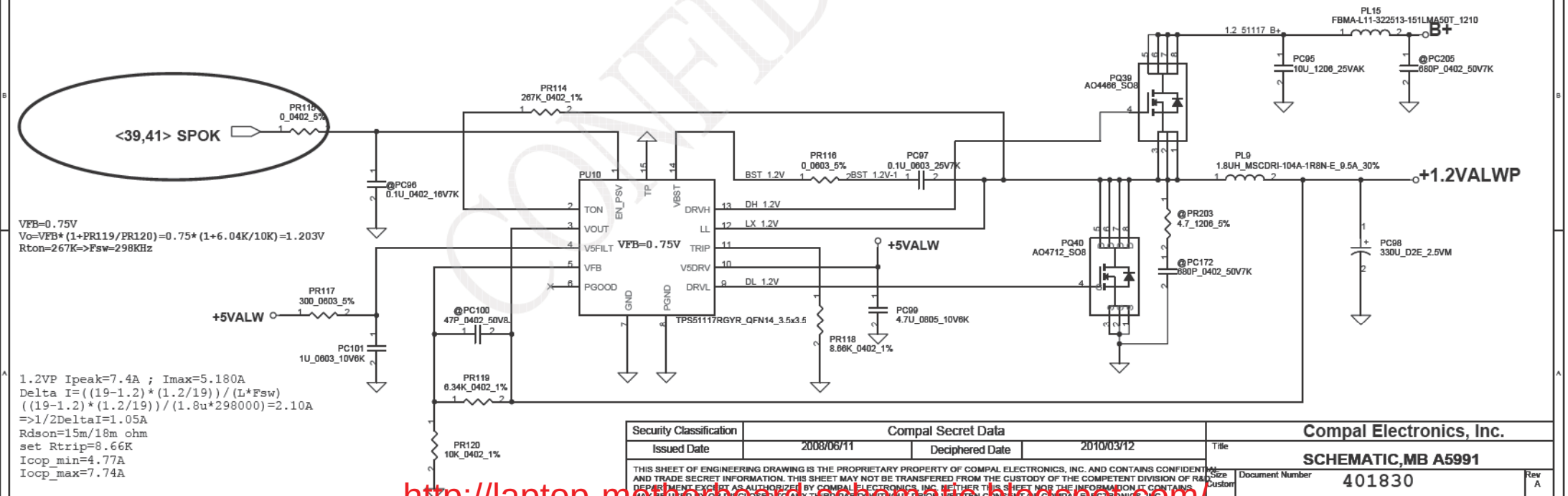

Security Classification	Compal Secret Data		
Issued Date	2008/06/11	Deciphered Date	2010/03/12

THIS SHEET OF ENGINEERING DRAWING IS THE PROPRIETARY PROPERTY OF COMPAL ELECTRONICS, INC. AND CONTAINS CONFIDENTIAL AND TRADE SECRET INFORMATION. THIS SHEET MAY NOT BE TRANSFERED FROM THE CUSTODY OF THE COMPETENT DIVISION OF R&D DEPARTMENT EXCEPT AS AUTHORIZED BY COMPAL ELECTRONICS, INC. NEITHER THIS SHEET NOR THE INFORMATION IT CONTAINS MAY BE USED BY OR DISCLOSED TO ANY THIRD PARTY WITHOUT PRIOR WRITTEN CONSENT OF COMPAL ELECTRONICS, INC.

Compal Electronics, Inc.

Title: SCHEMATIC,MB A5991

Size: Custom | Document Number: 401830 | Rev: A

Date: Monday, October 19, 2009 | Sheet 44 of 47

CONFIDENTIAL

http://laptop-motherboard-schematic.blogspot.com/

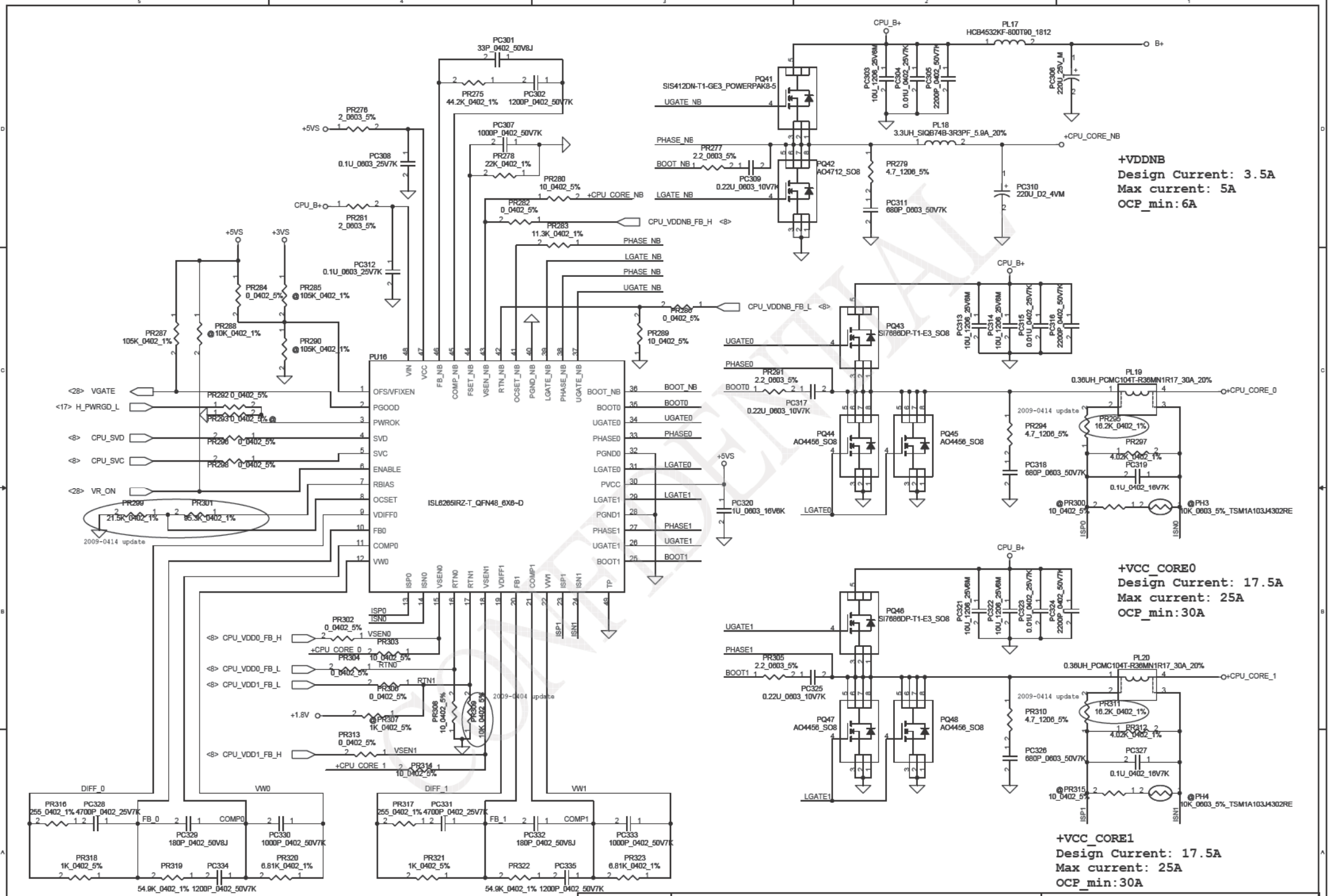

Security Classification	Compal Secret Data		
Issued Date	2008/11/03	Deciphered Date	2009/11/03

THIS SHEET OF ENGINEERING DRAWING IS THE PROPRIETARY PROPERTY OF COMPAL ELECTRONICS, INC. AND CONTAINS CONFIDENTIAL AND TRADE SECRET INFORMATION. THIS SHEET MAY NOT BE TRANSFERED FROM THE CUSTODY OF THE COMPETENT DIVISION OF R&D DEPARTMENT EXCEPT AS AUTHORIZED BY COMPAL ELECTRONICS, INC. NEITHER THIS SHEET NOR THE INFORMATION IT CONTAINS MAY BE USED BY OR DISCLOSED TO ANY THIRD PARTY WITHOUT PRIOR WRITTEN CONSENT OF COMPAL ELECTRONICS, INC.

Compal Electronics, Inc.

Title: SCHEMATIC,MB A5991

Size: Custom | Document Number: 401830 | Rev: A

Date: Monday, October 19, 2009 | Sheet 45 of 47

http://laptop-motherboard-schematic.blogspot.com/

Version change list (P.I.R. List)

Item	Fixed Issue	Reason for change	Rev.	PG#	Modify List	Date	Phase
1							
2							
3							
4							
5							
6							
7							
8							
9							
10							
11							
12							
13							
14							
15							
16							
17							
18							

CONFIDENTIAL

Security Classification	Compal Secret Data			Compal Electronics, Inc.
Issued Date	2009/09/11	Deciphered Date	2010/03/12	Title: SCHEMATIC,MB A5991

THIS SHEET OF ENGINEERING DRAWING IS THE PROPRIETARY PROPERTY OF COMPAL ELECTRONICS, INC. AND CONTAINS CONFIDENTIAL AND TRADE SECRET INFORMATION. THIS SHEET MAY NOT BE TRANSFERED FROM THE CUSTODY OF THE COMPETENT DIVISION OF R&D DEPARTMENT EXCEPT AS AUTHORIZED BY COMPAL ELECTRONICS, INC. NEITHER THIS SHEET NOR THE INFORMATION IT CONTAINS MAY BE USED BY OR DISCLOSED TO ANY THIRD PARTY WITHOUT PRIOR WRITTEN CONSENT OF COMPAL ELECTRONICS, INC.

Size	Document Number	Rev
Custom	401830	A
Date: Monday, October 19, 2009	Sheet 46 of 47	

http://laptop-motherboard-schematic.blogspot.com/

Version change list (P.I.R. List) for HW

Item	Reason for change	Modify List	PG#	Date	Item	Reason for change	Modify List	Rev.	PG#
1					26				
2					27				
3					28				
4					29				
5					30				
6					31				
7					32				
8					33				
9									
10									
11									
12									
13									
14									
15									
16									
17									
18									
19									
20									
21									
22									
23									
24									
25									

CONFIDENTIAL

Security Classification	Compal Secret Data			Compal Electronics, Inc.
Issued Date	2009/09/11	Deciphered Date	2010/03/12	Title: SCHEMATIC,MB A5991

THIS SHEET OF ENGINEERING DRAWING IS THE PROPRIETARY PROPERTY OF COMPAL ELECTRONICS, INC. AND CONTAINS CONFIDENTIAL AND TRADE SECRET INFORMATION. THIS SHEET MAY NOT BE TRANSFERED FROM THE CUSTODY OF THE COMPETENT DIVISION OF R&D DEPARTMENT EXCEPT AS AUTHORIZED BY COMPAL ELECTRONICS, INC. NEITHER THIS SHEET NOR THE INFORMATION IT CONTAINS MAY BE USED BY OR DISCLOSED TO ANY THIRD PARTY WITHOUT PRIOR WRITTEN CONSENT OF COMPAL ELECTRONICS, INC.

Size	Document Number	Rev
Custom	401830	A

Date: Monday, October 19, 2009 | Sheet 47 of 47

http://laptop-motherboard-schematic.blogspot.com/