Page	Title of schematic page	Rev.	Date
01	Page List	3A	03/15
02	Block Diagram	3A	
03	CPU-Champlain HT/CONTROL (1/3)	3A	03/15
04	CPU-Champlain MEMORY (2/3)	3A	03/15
05	CPU-Champlain POWER/GND (3/3)	3A	
06	NB-RS880M HT/SP-MEM (1/4)	3A	03/15
07	NB-RS880M GFX/PCIE (2/4)	3A	
08	NB-RS880M SYSTEM (3/4)	3A	03/15
09	NB-RS880M POWER (4/4)	3A	03/15
10	SB-SB820M PCI/CLK/LPC (1/4)	3A	03/15
11	SB-SB820M AUDIO/USB (2/4)	3A	03/15
12	SB-SB820M SATA (3/4)	3A	
13	SB-SB820M POWER (4/4)	3A	03/15
14	DDR3 SODIMM* 2 (5.2mm+9.2mm)	3A	
15	ATI-M92 XTX PCIE/LVDS (1/5)	3A	
16	ATI-M92 XTX Main I/O (2/5)	3A	03/15
17	ATI-M92 XTX Power/GND (3/5)	3A	03/15
18	ATI-M92 XTX DisPlay POWER (4/5)	3A	03/15
19	ATI-M92 XTX MEM I/F (5/5)	3A	03/15
20	ATI-M92 XTX VRAM-B DDR3	3A	
21	CRT/LVDS	3A	03/15
22	HDMI	3A	03/15

Page	Title of schematic page	Rev.	Date
23	WLAN/HDD/ODD	3A	03/15
24	Card Reader RTS5186	3a	03/15
25	Express Card/BT/LED	3A	03/15
26	Codec-ALC269Q VB5 GR	3A	03/15
27	LAN RTL8111E	3A	03/15
28	NPCE781	3A	03/15
29	KB/USB/FAN/PS	3A	
30	VCORE(ISL6265A)	3A	03/15
31	3VPCU&5VPCU(PM6686)	3A	03/15
32	1.5VSUS/VTT_MEM	3A	03/15
33	DYN_VCC1.1(OZ8116LN)	3A	03/15
34	VCC1.1(OZ8116LN)-7A	3A	03/15
35	VGA_CORE(OZ8116)-16A	3A	03/15
36	VCC1.8/0.9/2.5/1.0	3A	03/15
37	POWER(BAT IN / ADA IN/ UL)	3A	03/15
38	CHARGER (ISL6252A)	3A	03/15
39	Small board connector	3A	03/15
40	Decoulping(Cap)	3A	03/15
41	Power Sequence	3A	
42	CHANGE LIST	3A	03/15

1.Level 1 Environment-related Substances Should NEVER be Used.
2.Purchase ink, paint, wire rods, and Molding resins only from the business Partners that Sony approves as Green Partners.

Quanta Computer Inc.

PROJECT : NE7

Size	Document Number	Rev
	AMD Danube	3A

Date: Monday, March 22, 2010 Sheet 1 of 42

hexainf@hotmail.com
GRATIS - FREE

Danube Block Diagram

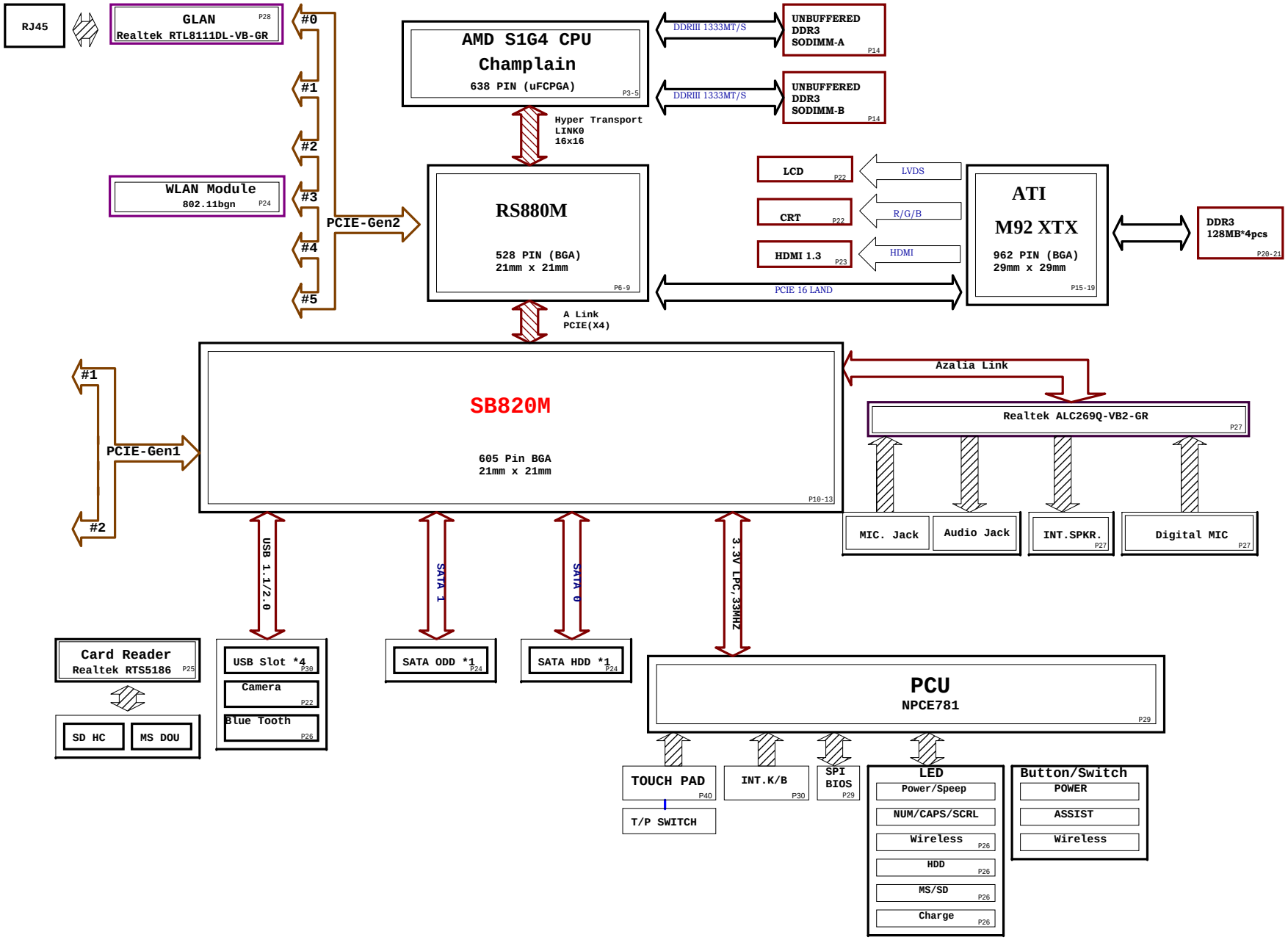

1.Level 1 Environment-related Substances Should NEVER be Used.
2.Purchase ink, paint, wire rods, and Molding resins only from the business Partners that Sony approves as Green Partners.

Quanta Computer Inc.
PROJECT : NE7

Size	Document Number	Rev
	Danube - Block Diagram	3A

Date: Monday, March 22, 2010 Sheet 2 of 42

hexainf@hotmail.com
GRATIS - FREE

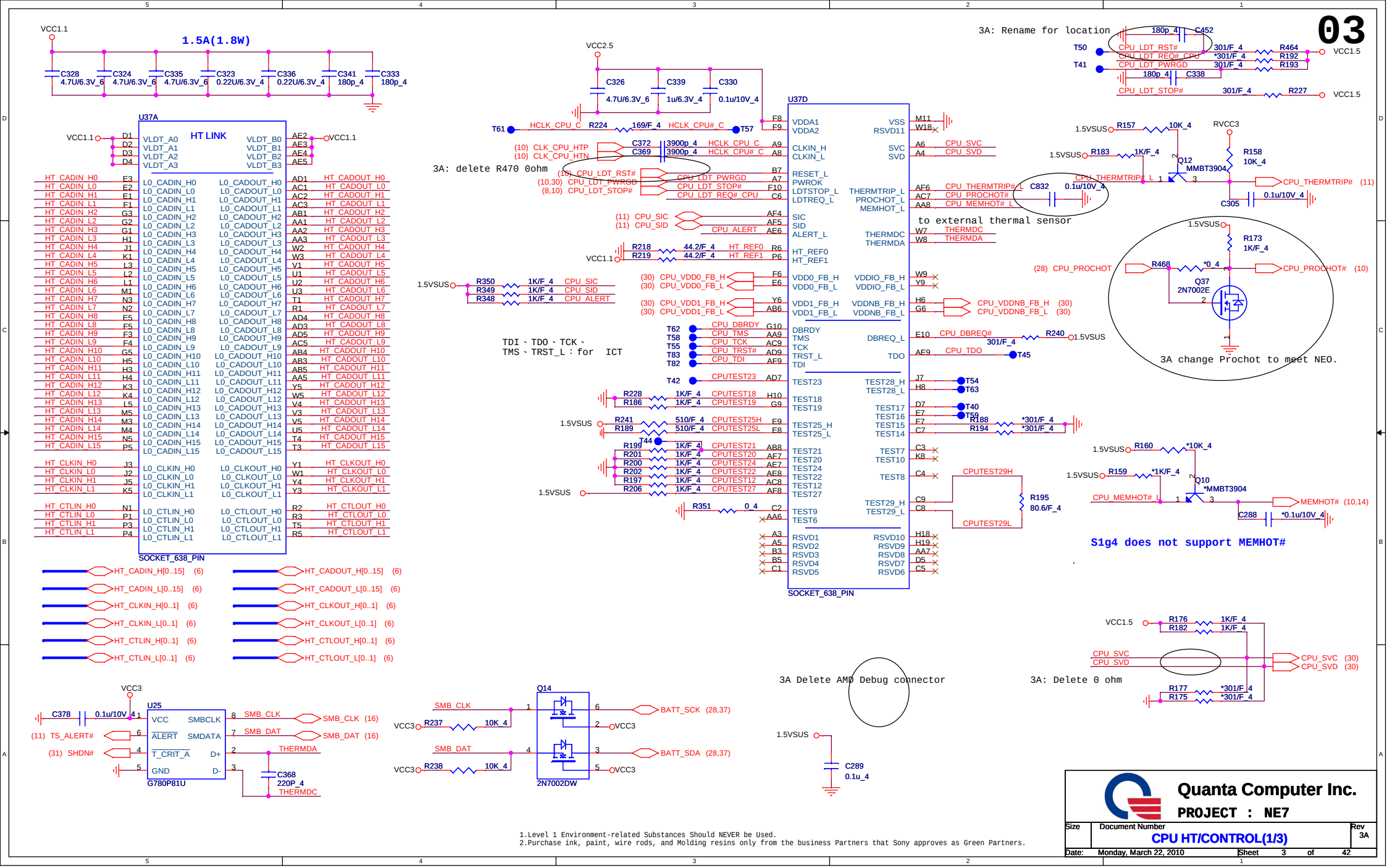

hexainf@hotmail.com
GRATIS - FREE

Processor Memory Interface

04

3A delete R208 0ohm

CPU_VDDR : 35W->0.9V
45W->1.05V

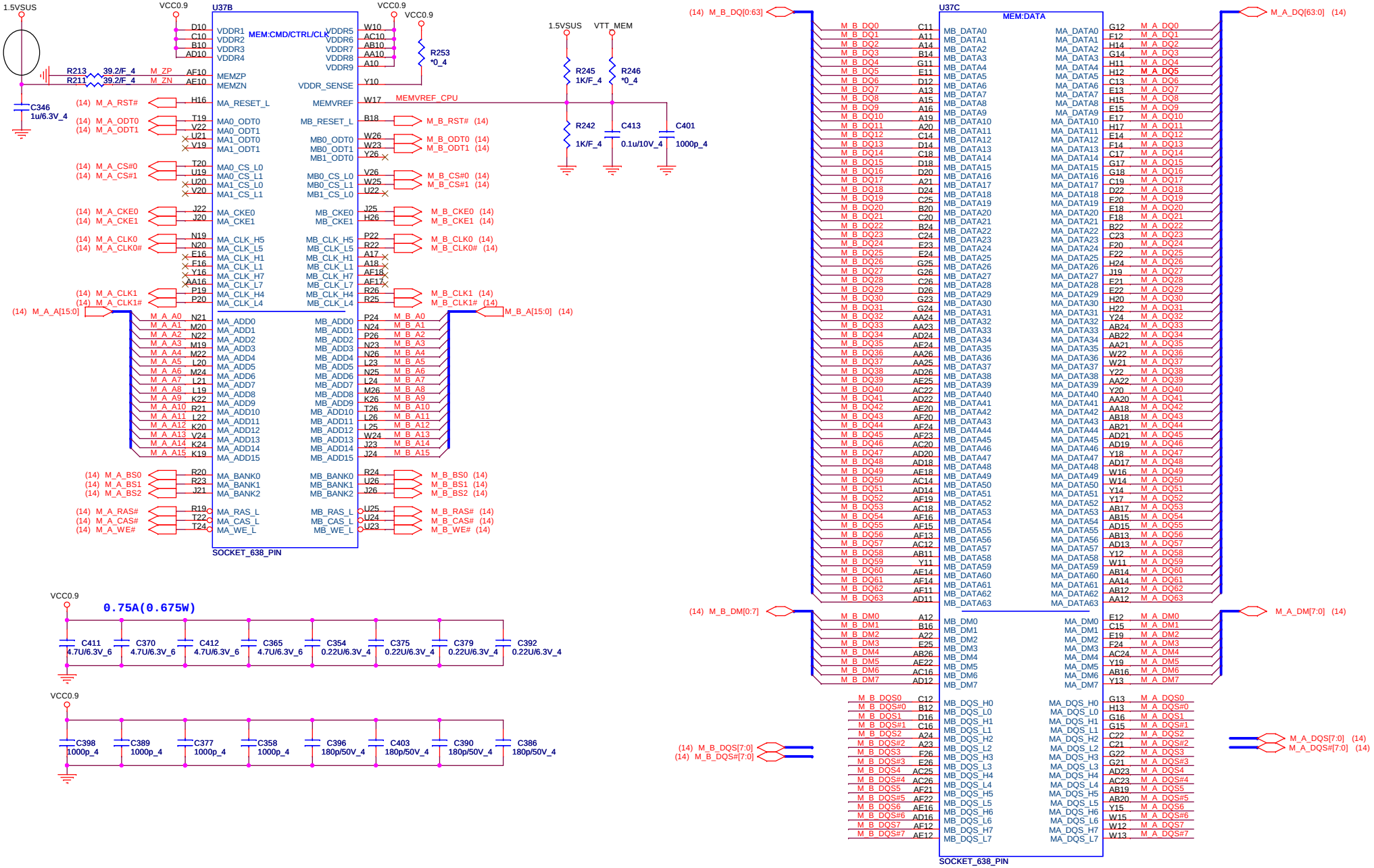

1.Level 1 Environment-related Substances Should NEVER be Used.
2.Purchase ink, paint, wire rods, and Molding resins only from the business Partners that Sony approves as Green Partners.

Quanta Computer Inc.

PROJECT : NE7

Size	Document Number	Rev
	CPU MEMORY(2/3)	3A

Date: Monday, March 22, 2010 Sheet 4 of 42

hexainf@hotmail.com
GRATIS - FREE

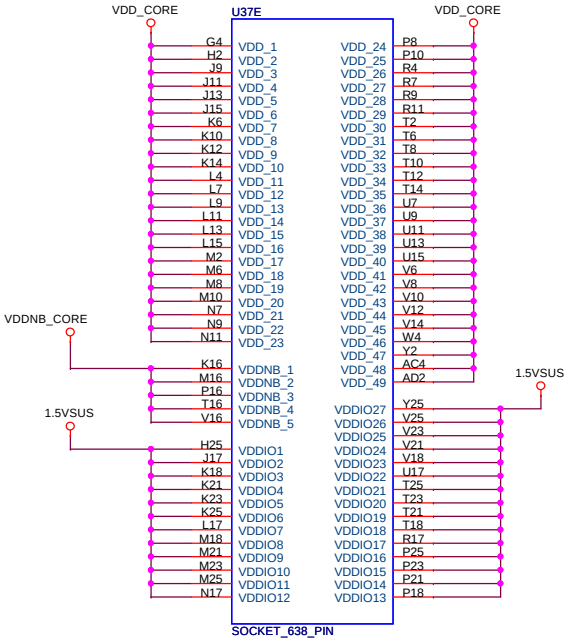

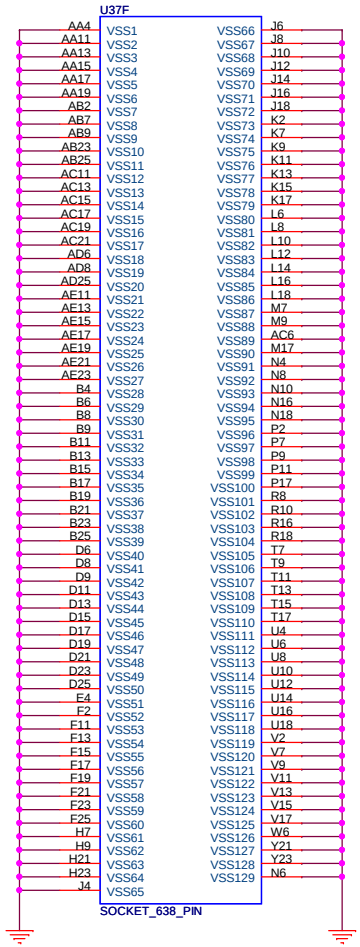

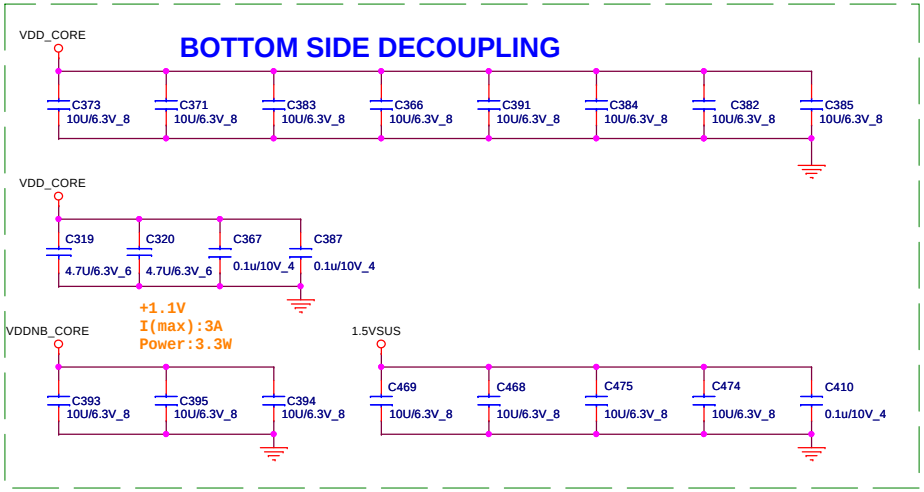

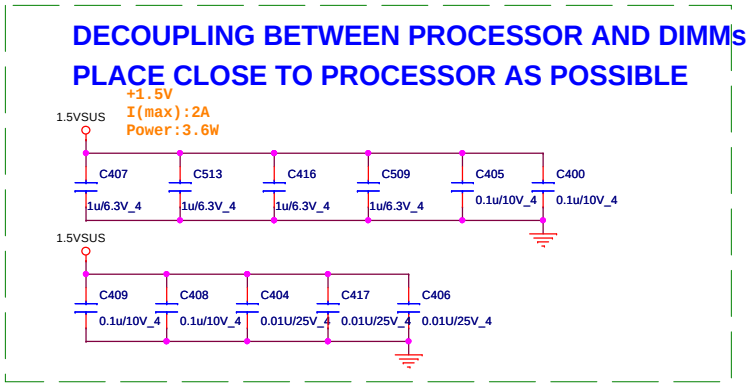

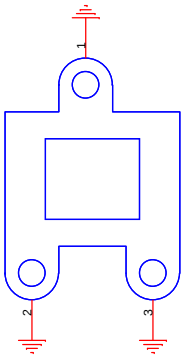

1.Level 1 Environment-related Substances Should NEVER be Used.
2.Purchase ink, paint, wire rods, and Molding resins only from the business Partners that Sony approves as Green Partners.

hexainf@hotmail.com
GRATIS - FREE

Quanta Computer Inc.

PROJECT : NE7

Size	Document Number	Rev
	CPU POWER/GND(3/3)	3A

Date: Monday, March 22, 2010 Sheet 5 of 42

This block is for Side Port only , others can remove some components

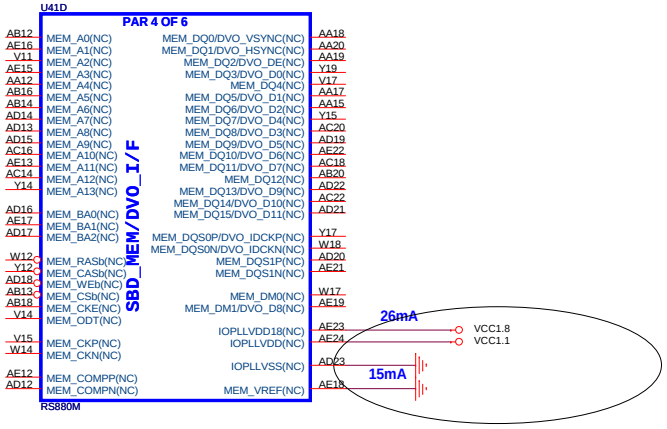

3A change R422, R423 to short pad
delete R424, R425 0ohm.

1.Level 1 Environment-related Substances Should NEVER be Used.
2.Purchase ink, paint, wire rods, and Molding resins only from the business Partners that Sony approves as Green Partners.

Quanta Computer Inc.
PROJECT : NE7

Size	Document Number	Rev
	RS880M HT/SPMEM(1/4)	3A

Date: Monday, March 22, 2010 Sheet 6 of 42

hexainf@hotmail.com
GRATIS - FREE

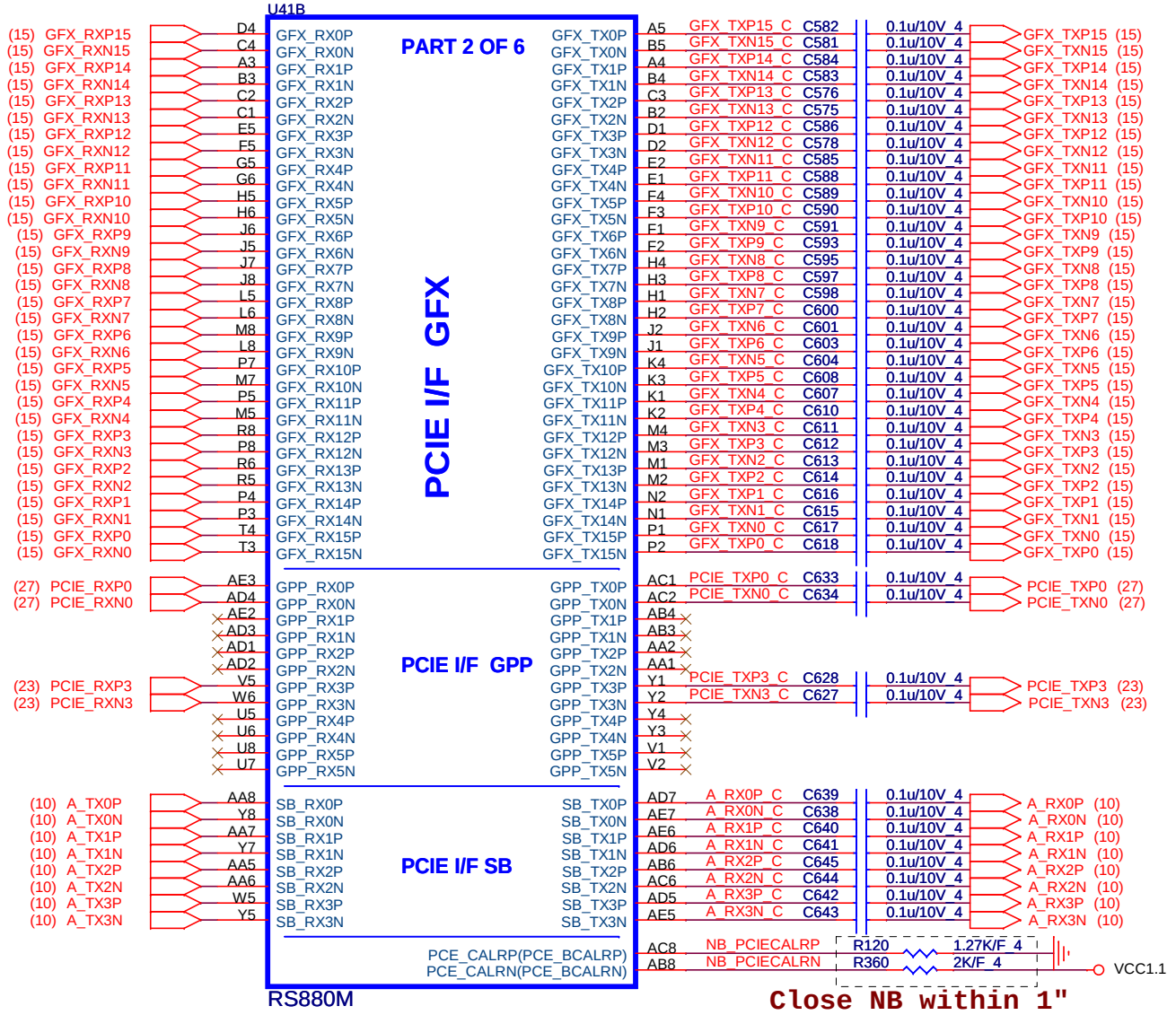

Layout Swap
TX11, TX10, TX9,
TX8,TX7,TX6, TX5,
TX4, TX3, TX2, TX0

1.Level 1 Environment-related Substances Should NEVER be Used.
2.Purchase ink, paint, wire rods, and Molding resins only from the business Partners that Sony approves as Green Partners.

Quanta Computer Inc.

PROJECT : NE7

Size	Document Number	Rev
	RS880M GFX/PCIE(2/4)	3A

Date: Monday, March 22, 2010 Sheet 7 of 42

hexainf@hotmail.com
GRATIS - FREE

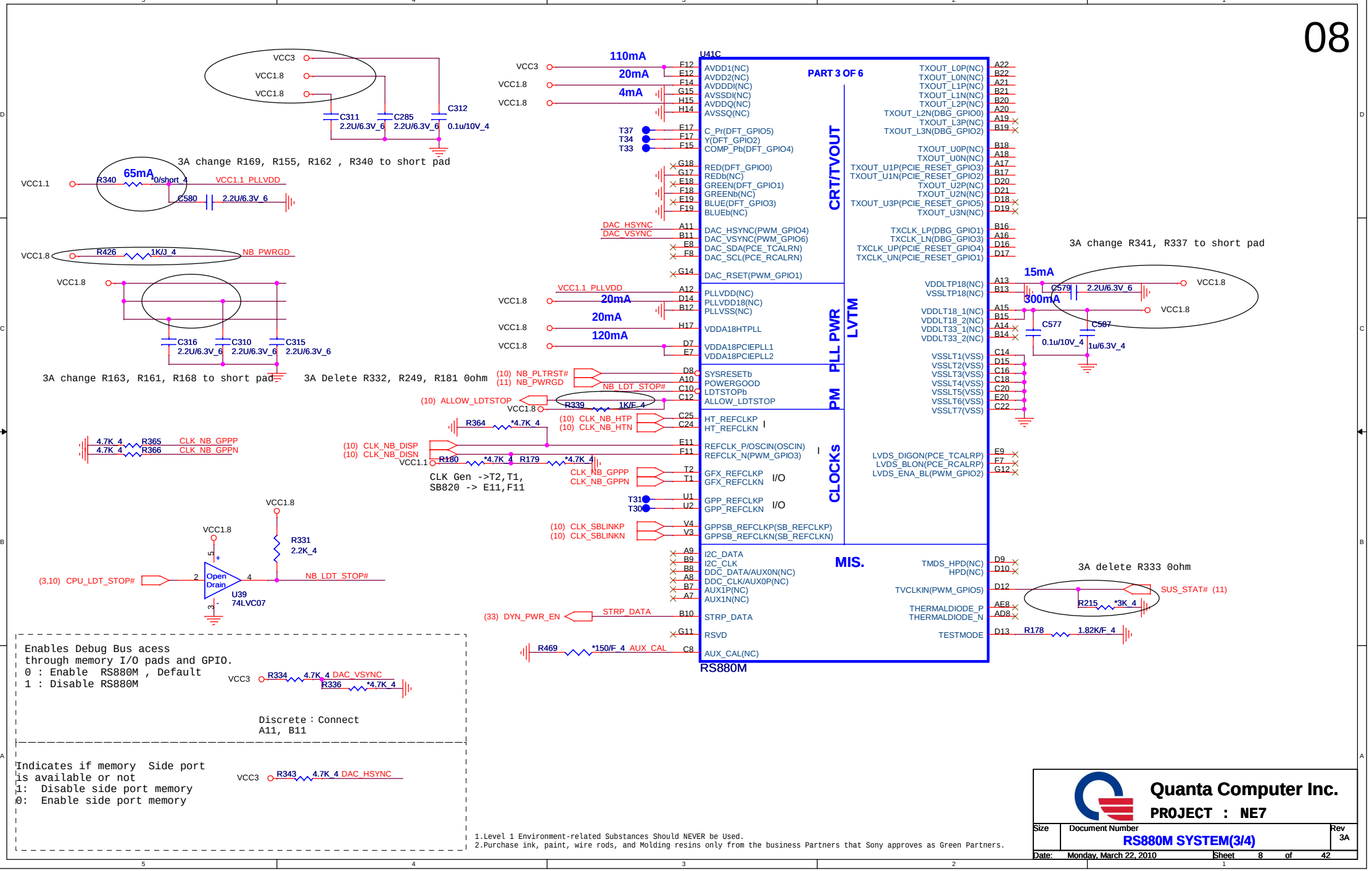

hexainf@hotmail.com
GRATIS - FREE

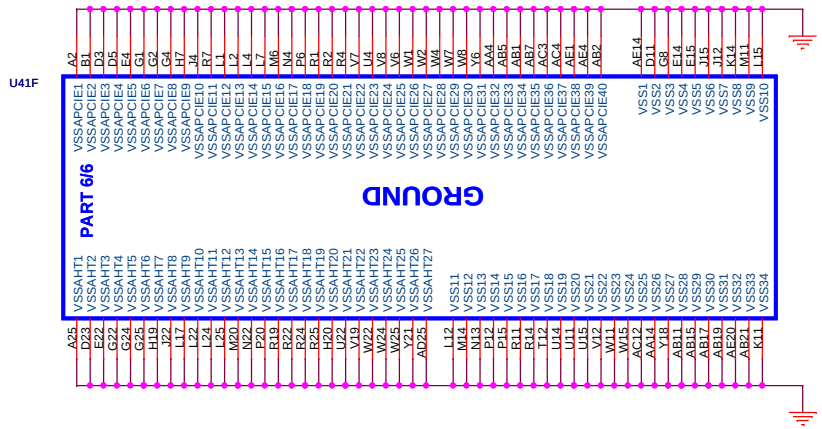

RS880M/RX881 POWER DIFFERENCE TABLE

PIN NAME	RX881	RS880M	PIN NAME	RX881	RS880M
VDDHT	+1.1V	+1.1V	IOPLLVDD	NC	+1.1V
VDDHTRX	+1.1V	+1.1V	AVDD	NC	+3.3V
VDDHTTX	+1.1V	+1.1V	AVDDDI	NC	+1.8V
VDDA18PCIE	+1.8V	+1.8V	AVDDQ	NC	+1.8V
VDDG18	+1.8V	+1.8V	PLLVDD	NC	+1.1V
VDD18_MEM	NC	+1.8V	PLLVDD18	NC	+1.8V
VDDPCIE	+1.1V	+1.1V	VDDA18PCIEPLL	+1.8V	+1.8V
VDDC	+1.1V	+1.1V	VDDA18HTPLL	+1.8V	+1.8V
VDD_MEM	NC	+1.5V	VDDLTP18	NC	+1.8V
VDDG33	NC	+3.3V	VDDLT18	NC	+1.8V
IOPLLVDD18	NC	+1.8V	VDDLT33	NC	NC

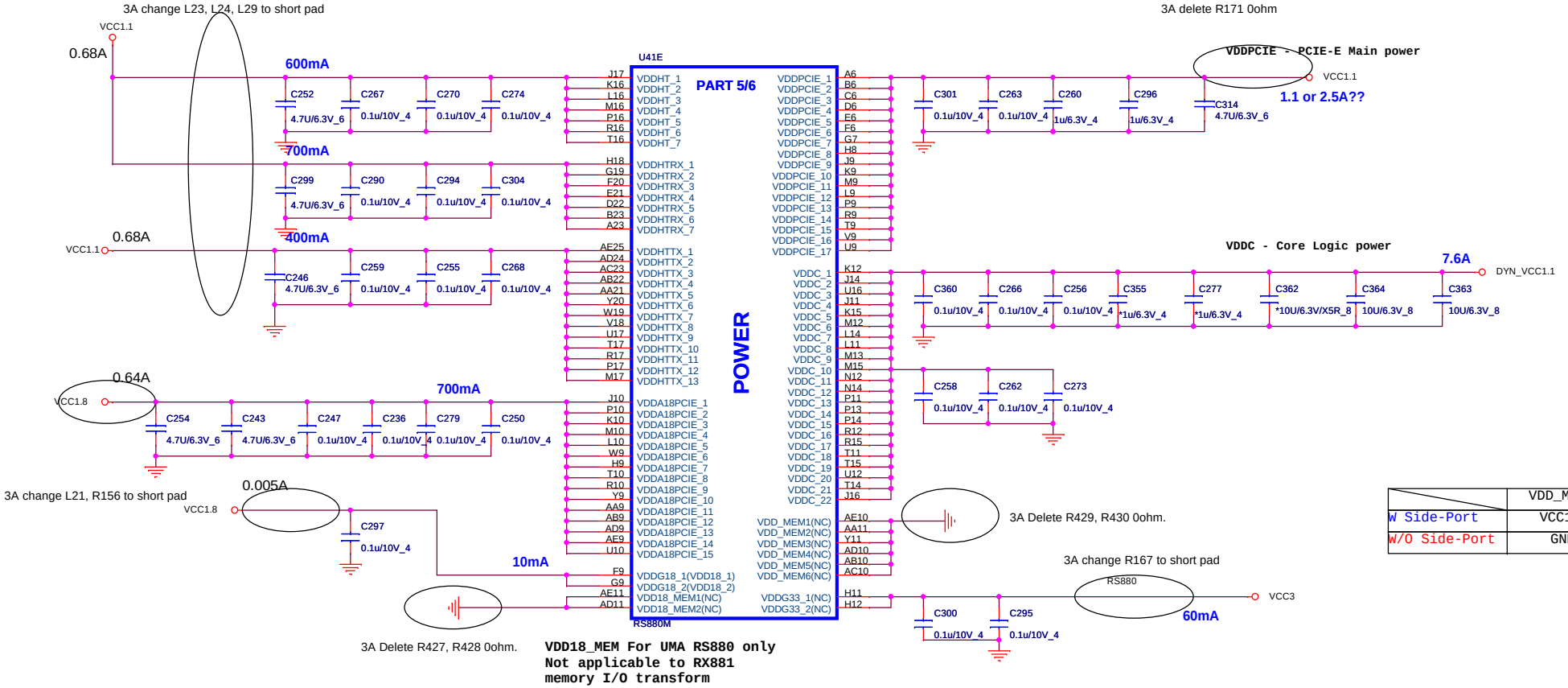

	VDD_MEM
W Side-Port	VCC1.5
W/O Side-Port	GND

	VDD18_MEM
W Side-Port	VCC1.8
W/O Side-Port	GND

1.Level 1 Environment-related Substances Should NEVER be Used.
2.Purchase ink, paint, wire rods, and Molding resins only from the business Partners that Sony approves as Green Partners.

Quanta Computer Inc.
PROJECT : NE7

Size	Document Number	Rev
	RS880M POWER(4/4)	3A

Date: Monday, March 22, 2010 Sheet 9 of 42

hexainf@hotmail.com
GRATIS - FREE

Strap Table

PCI_CLK1	PCI_CLK2	PCI_CLK3	PCI_CLK4
ALLOW PCIE Gen2	Watchdog Timer Enable	USE DEBUG STRAPS	non_Fusion CLOCK MODE DEFAULT
FORCE PCIE Gen1 DEFAULT	Watchdog Timer Disable DEFAULT	IGNORE DEBUG STRAPS DEFAULT	Fusion CLOCK MODE

RTC

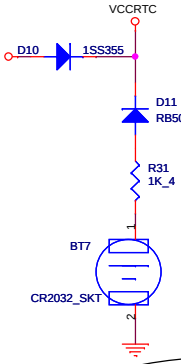

PCI Strap

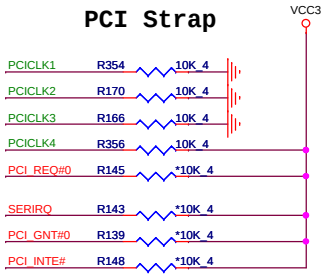

SB820 Part 1 of 5

U40A

PCI EXPRESS INTERFACES

PCIE_RST# (8) NB_PLTRST# — R347 33_4, R335 33_4 A_RST#_SB

A_TX0P (7) — C606 0.1u/10V_4 A_TX0P_C
A_TX0N (7) — C609 0.1u/10V_4 A_TX0N_C
A_TX1P (7) — C602 0.1u/10V_4 A_TX1P_C
A_TX1N (7) — C605 0.1u/10V_4 A_TX1N_C
A_TX2P (7) — C599 0.1u/10V_4 A_TX2P_C
A_TX2N (7) — C596 0.1u/10V_4 A_TX2N_C
A_TX3P (7) — C592 0.1u/10V_4 A_TX3P_C
A_TX3N (7) — C594 0.1u/10V_4 A_TX3N_C

A_RX0P (7)
A_RX0N (7)
A_RX1P (7)
A_RX1N (7)
A_RX2P (7)
A_RX2N (7)
A_RX3P (7)
A_RX3N (7)

VCC1.1 — R357 590/F_4 PCIE_CALRP_SB, R154 2K/F_4 PCIE_CALRN_SB — 0.04A

SB8xx only supports 2 GPP port 2 &3 is not supported.

GPP_TX0P, GPP_TX0N, GPP_TX1P, GPP_TX1N, GPP_TX2P, GPP_TX2N, GPP_TX3P, GPP_TX3N

GPP_RX0P, GPP_RX0N, GPP_RX1P, GPP_RX1N, GPP_RX2P, GPP_RX2N, GPP_RX3P, GPP_RX3N

PCI CLKS

PCICLK0 — T89
PCICLK1/GPO36
PCICLK2/GPO37
PCICLK3/GPO38
PCICLK4/14M_OSC/GPO39
PCIRST# — T88

PCI INTERFACE

AD0/GPIO0 … AD31/GPIO31
CBE0# … CBE3#
FRAME#, DEVSEL#, IRDY#, TRDY#, PAR, STOP#, PERR#, SERR#, REQ0#
REQ1#/GPIO40 — PCI_REQ#0
REQ2#/CLK_REQ8#/GPIO41 — PCI_REQ#1 — T35
REQ3#/CLK_REQ5#/GPIO42 — PCI_REQ#2 — T32
GNT0# — PCI_REQ#3 — T36
GNT1#/GPO44 — PCI_GNT#0 — T116
GNT2#/GPO45 — T109
GNT3#/CLK_REQ7#/GPIO46 — T39
CLKRUN#, LOCK#
INTE#/GPIO32 — PCI_INTE#
INTF#/GPIO33
INTG#/GPIO34
INTH#/GPIO35 — VGA_RST#

3A : Delete R358 0ohm

VDDR_09_EN# (36)

Low=0.9V, High=1.05V

SB_MEMHOT# — R371 *2.2K_4 — Q34 *MMBT3904 — R370 *2.2K_4 — VCC3 — MEMHOT# (3,14)

CLOCK GENERATOR

CLK_SBLINKP (8), CLK_SBLINKN (8) — PCIE_RCLKP/NB_LNK_CLKP, PCIE_RCLKN/NB_LNK_CLKN

CLK_NB_DISP (8), CLK_NB_DISN (8) — NB_DISP_CLKP, NB_DISP_CLKN

CLK_NB_HTP (8), CLK_NB_HTN (8) — NB_HT_CLKP, NB_HT_CLKN

CLK_CPU_HTP (3), CLK_CPU_HTN (3) — CPU_HT_CLKP, CPU_HT_CLKN

GFX_CLKP (15), GFX_CLKN (15) — SLT_GFX_CLKP, SLT_GFX_CLKN

GPP_CLK0P, GPP_CLK0N
GPP_CLK1P, GPP_CLK1N
GPP_CLK2P, GPP_CLK2N

3A delete RP36, RP42, RP38, RP26, RP43, RP41, RP35 0ohm

CLK_PCIE_LANP (27), CLK_PCIE_LANN (27) — GPP_CLK3P, GPP_CLK3N

CLK_PCIE_MINIP (23), CLK_PCIE_MININ (23) — GPP_CLK4P, GPP_CLK4N

GPP_CLK5P, GPP_CLK5N

GPP4、5 used for NB PCIE

GPP_CLK6P, GPP_CLK6N

GPP_CLK7P, GPP_CLK7N

GPP_CLK8P, GPP_CLK8N

T76 — 14M_25M_48M_OSC

C571 27P/50V_4 — 25MX1 — Y12 25MHz/20pF/30ppm — R431 1M_4 — 25M_X1

C572 27P/50V_4 — 25MX2 — 25M_X2

LPC

LPCCLK0 — LPCCLK0 — R310 22_4 — PCLK_EC (28)
LPCCLK1 — PCLK_MP_R — R318 22_4 — PCLK_MP (23)

LAD0 — LPC_AD0 (23,28)
LAD1 — LPC_AD1 (23,28)
LAD2 — LPC_AD2 (23,28)
LAD3 — LPC_AD3 (23,28)
LFRAME# — LPC_FRAME# (23,28)
LDRQ# — T46
LDRQ1#/CLK_REQ6#/GPIO49 — T38
SERIRQ/GPIO48 — SERIRQ (28)

CPU

ALLOW_LDTSTP/DMA_ACTIVE# — ALLOW_LDTSTOP (8)
PROCHOT# — CPU_PROCHOT# (3)
LDT_PG — CPU_LDT_PWRGD (3,30)
LDT_STP# — CPU_LDT_STOP# (3,8)
LDT_RST# — CPU_LDT_RST# (3)

CPU_PROCHOT# — C831 0.1u/10V_4

RTC

32K_X1 — RTC_X1
32K_X2 — RTC_X2
RTCCLK — CLK_RTC (28)
INTRUDER_ALERT# — T81
VDDBT_RTC_G — VDDBT_RTC_G — G8 *SHORT_PAD1 — C38 0.1u/10V_4 — C352 1u/6.3V_4 — R217 510_4 — VCCRTC

INTRUDER_ALERT# Southbridge has 50-k ohm internal pull-up to VBAT

SB820M A12

VCC3 / RTC

VCC3 — R247 10K_4, R305 10K_4 — C621 0.1u/10V_4

(11) SB_GPIO_RST# — A_RST# SB — U28 TC7SH08FU — PCIE_RST# (23,27)

3A : change R247, R305 from 100k to 10Kohm

VCC3 — R372 10K_4

(15) GFX_RST# — RB501V-40 — D32 A_RST# SB

*RB501V-40 — D31 VGA_RST#

LPCCLK0 — R320 10K_4

RVCC3 — R319 10K_4 — PCLK_MP_R — R329 *10K_4

LPCLK0	LPCLK1
H=Enable embedded EC	H=Enable Internal CLK Gen.
L=Disable embedded EC	L=Disable Internal CLK Gen.

RTC_X1 — C563 18P/50V_4
R328 20M_6 — Y11 32.768K/10PPM
RTC_X2 — C564 18P/50V_4

1.Level 1 Environment-related Substances Should NEVER be Used.
2.Purchase ink, paint, wire rods, and Molding resins only from the business Partners that Sony approves as Green Partners.

Quanta Computer Inc.

PROJECT : NE7

Size	Document Number	Rev
	SB820 PCI/CLK/LPC(1/4)	3A

Date: Monday, March 22, 2010 Sheet 10 of 42

hexainf@hotmail.com
GRATIS - FREE

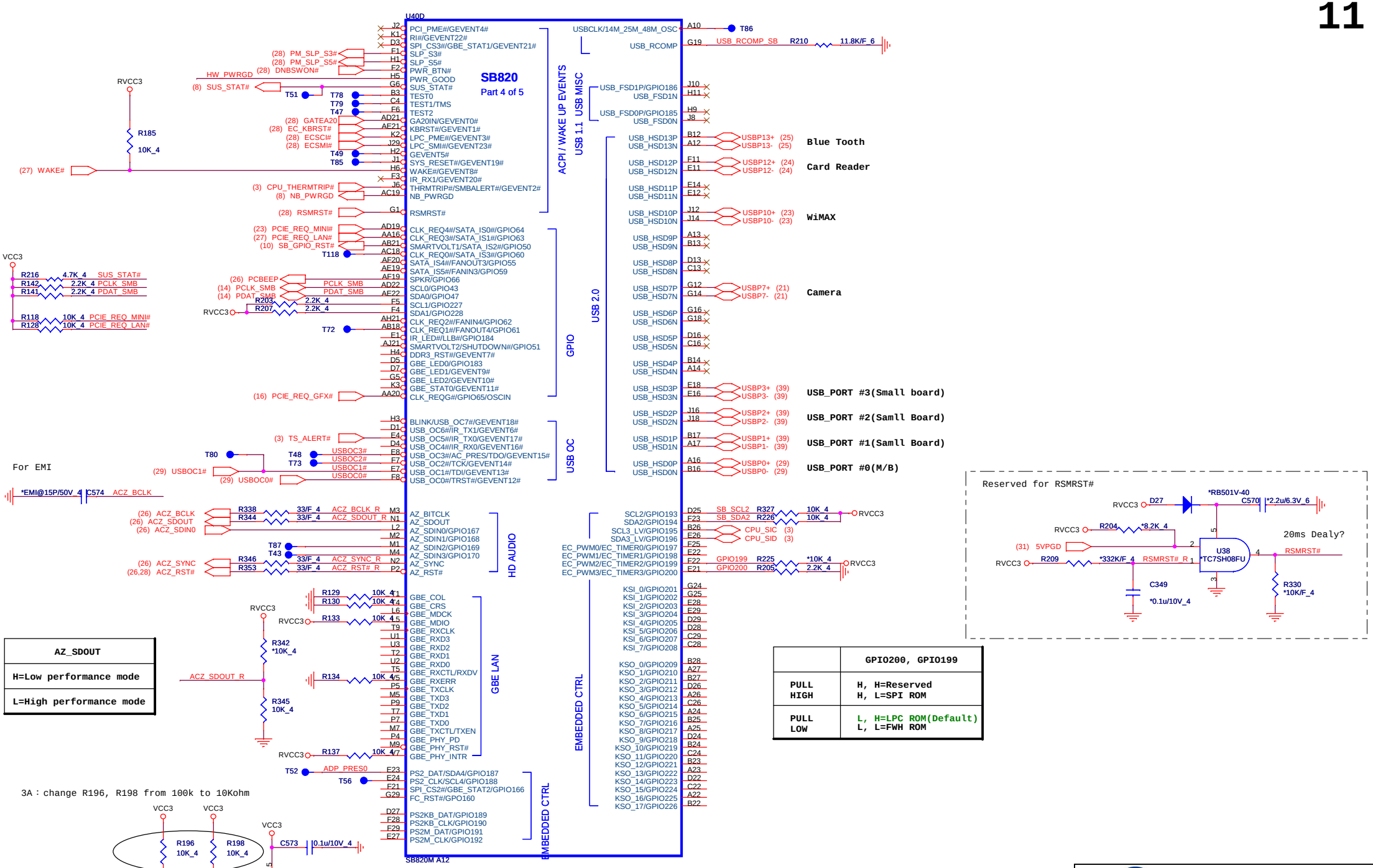

1.Level 1 Environment-related Substances Should NEVER be Used.
2.Purchase ink, paint, wire rods, and Molding resins only from the business Partners that Sony approves as Green Partners.

Quanta Computer Inc.

PROJECT : NE7

Size	Document Number	Rev
	SB820 AUDIO/USB(3/4)	3A

Date: Monday, March 22, 2010 Sheet 11 of 42

hexainf@hotmail.com
GRATIS - FREE

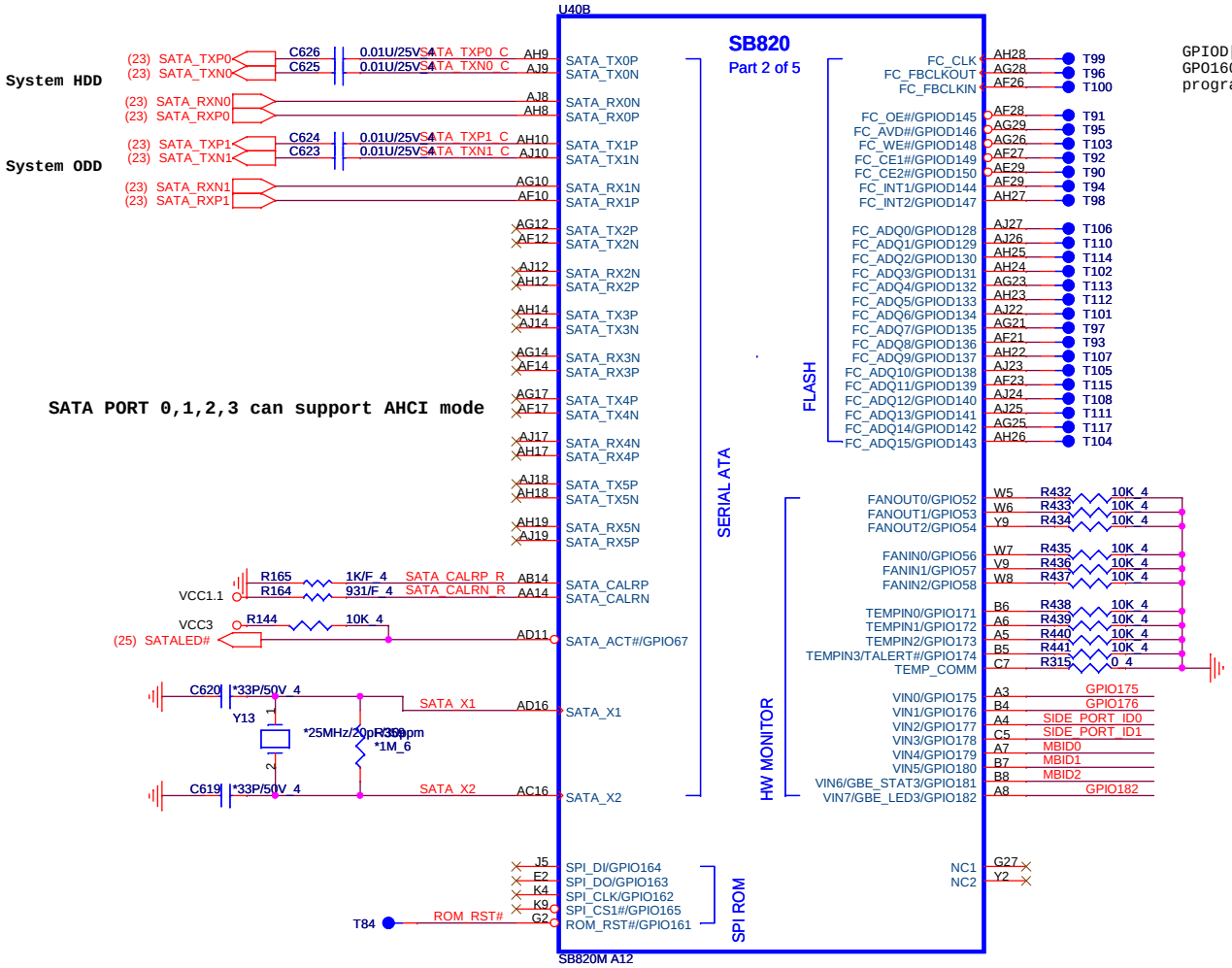

GPIOD[150:128] are open drain GPIO pins where as GPO160 is an open drain GPO pin. These pins are not programmed to GPIO mode by default.

ID2	ID1	ID0	
0	0	0	Danube UMA
0	0	1	Danube UMA+Side port
0	1	0	Danube+Park XT
0	1	1	Danube+Madison LP
1	0	0	Danube+M92 XTX
1	0	1	
1	1	0	
1	1	1	

	NON	SAMSUNG	HYNIX	
SP ID0	0	1	0	1
SP ID1	0	0	1	1

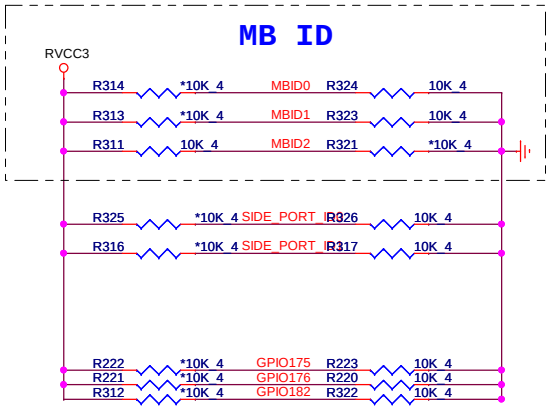

1.Level 1 Environment-related Substances Should NEVER be Used.
2.Purchase ink, paint, wire rods, and Molding resins only from the business Partners that Sony approves as Green Partners.

Quanta Computer Inc.

PROJECT : NE7

Size	Document Number	Rev
	SB820 SATA(2/4)	3A

Date: Monday, March 22, 2010 Sheet 12 of 42

hexainf@hotmail.com
GRATIS - FREE

3A change R150, L27, L26, L30 to short pad

3A change R172, L42, L28, L25 to short pad

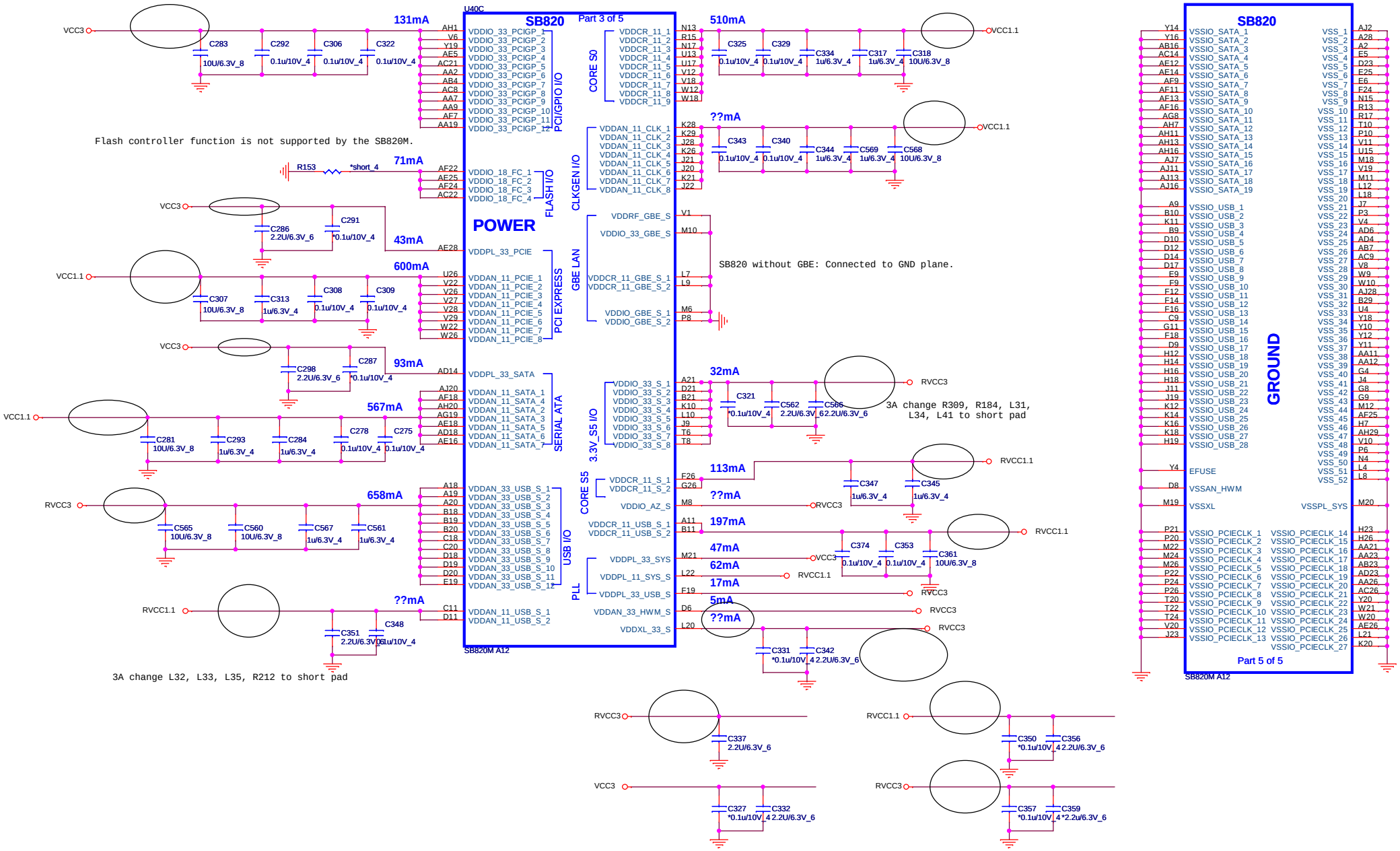

3A change L32, L33, L35, R212 to short pad

1.Level 1 Environment-related Substances Should NEVER be Used.
2.Purchase ink, paint, wire rods, and Molding resins only from the business Partners that Sony approves as Green Partners.

Quanta Computer Inc.

PROJECT : NE7

Size	Document Number	Rev
	SB820 POWER(4/4)	3A

Date: Monday, March 22, 2010 Sheet 13 of 42

hexainf@hotmail.com
GRATIS - FREE

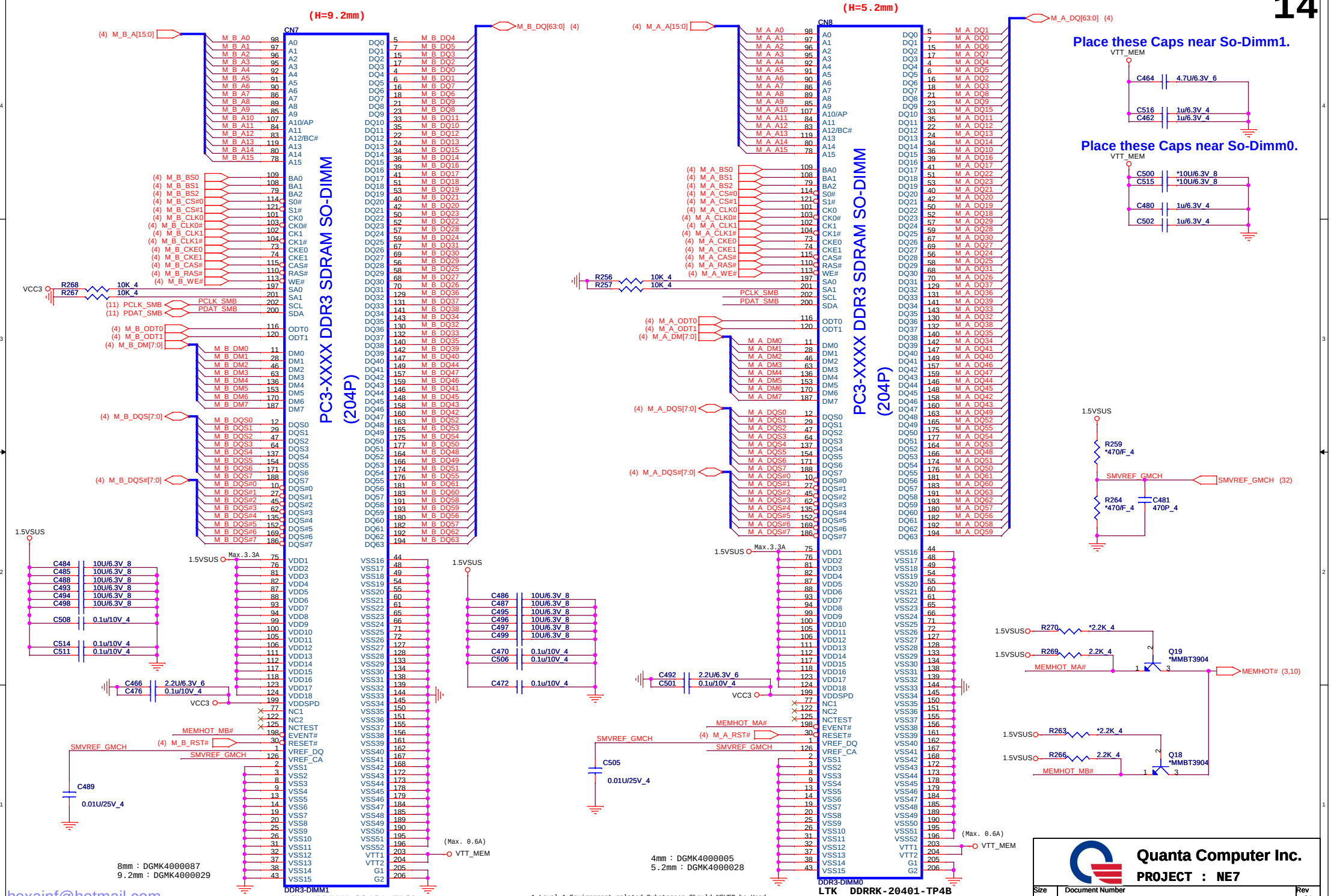

1.Level 1 Environment-related Substances Should NEVER be Used.
2.Purchase ink, paint, wire rods, and Molding resins only from the business Partners that Sony approves as Green Partners.

Quanta Computer Inc.

PROJECT : NE7

Size	Document Number	Rev
	DDR3 SODIMMX2	3A

Date: Monday, March 22, 2010 Sheet 14 of 42

hexainf@hotmail.com
GRATIS - FREE

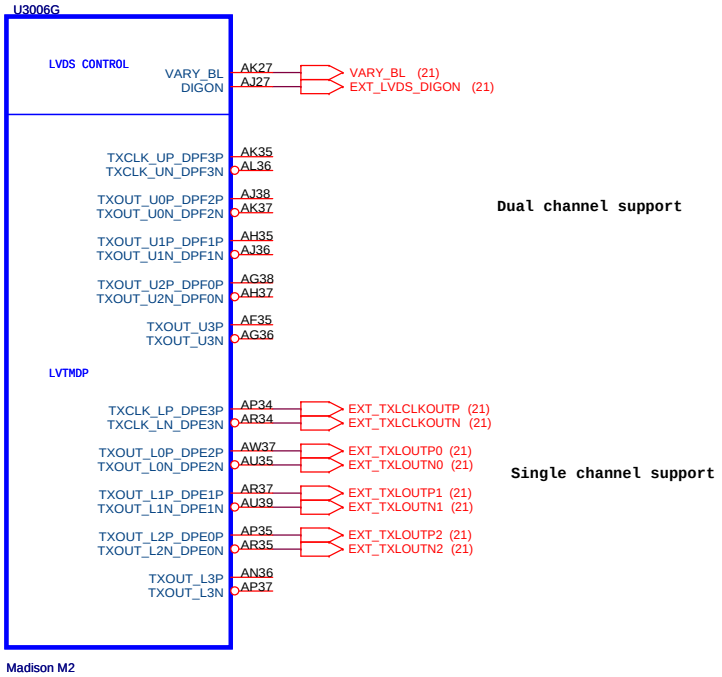

1.Level 1 Environment-related Substances Should NEVER be Used.
2.Purchase ink, paint, wire rods, and Molding resins only from the business Partners that Sony approves as Green Partners.

Quanta Computer Inc.

PROJECT : NE7

Size	Document Number	Rev
	ATI PCIE/LVDS	3A

Date: Monday, March 22, 2010 Sheet 15 of 42

hexainf@hotmail.com
GRATIS - FREE

MEMID[3:0]	Vendor	Type	Vendor P/N	
0000				
0001	Hinyx	64*16-800MHZ	H5TQ1G63BFR-12C	AKD5LZGTW00
0010	Samsung	64*16-800MHZ	K4W1G1646E-HC12	AKD5LGGT502
0011	Ati	64*16-800MHZ	23EY2387MA-12	AKD5LGGT701
0100			Reserved	
0101			Reserved	
0110			Reserved	
0111			Reserved	
1000			Reserved	
1001			Reserved	
1010			Reserved	
1011			Reserved	
1100			Reserved	
1101			Reserved	
1110			Reserved	
1111			Reserved	

Samsung 64*16-900MHZ K4W1G1646E-HC11

GPIO0 : PCIE FULL TX OUTPUT SWING
GPIO1 : PCIE TRANSMITTER DE-EMPHASIS ENABLED
GPIO2 : BIF_GEN2_EN_A
GPIO8 : RESERVED
GPIO9 : VGA ENABLED
GPIO[13:11] : SERIAL ROM TYPE OR MEMORY APERTURE SIZE SELECT
V2SYNC : IGNORE VIP DEVICE STRAPS
H2SYNC : 0
GENERICC : 0
HSYNC : 1 (AUDIO FOR BOTH DP AND HDMI)
VSYNC : 1 (AUDIO FOR BOTH DP AND HDMI)

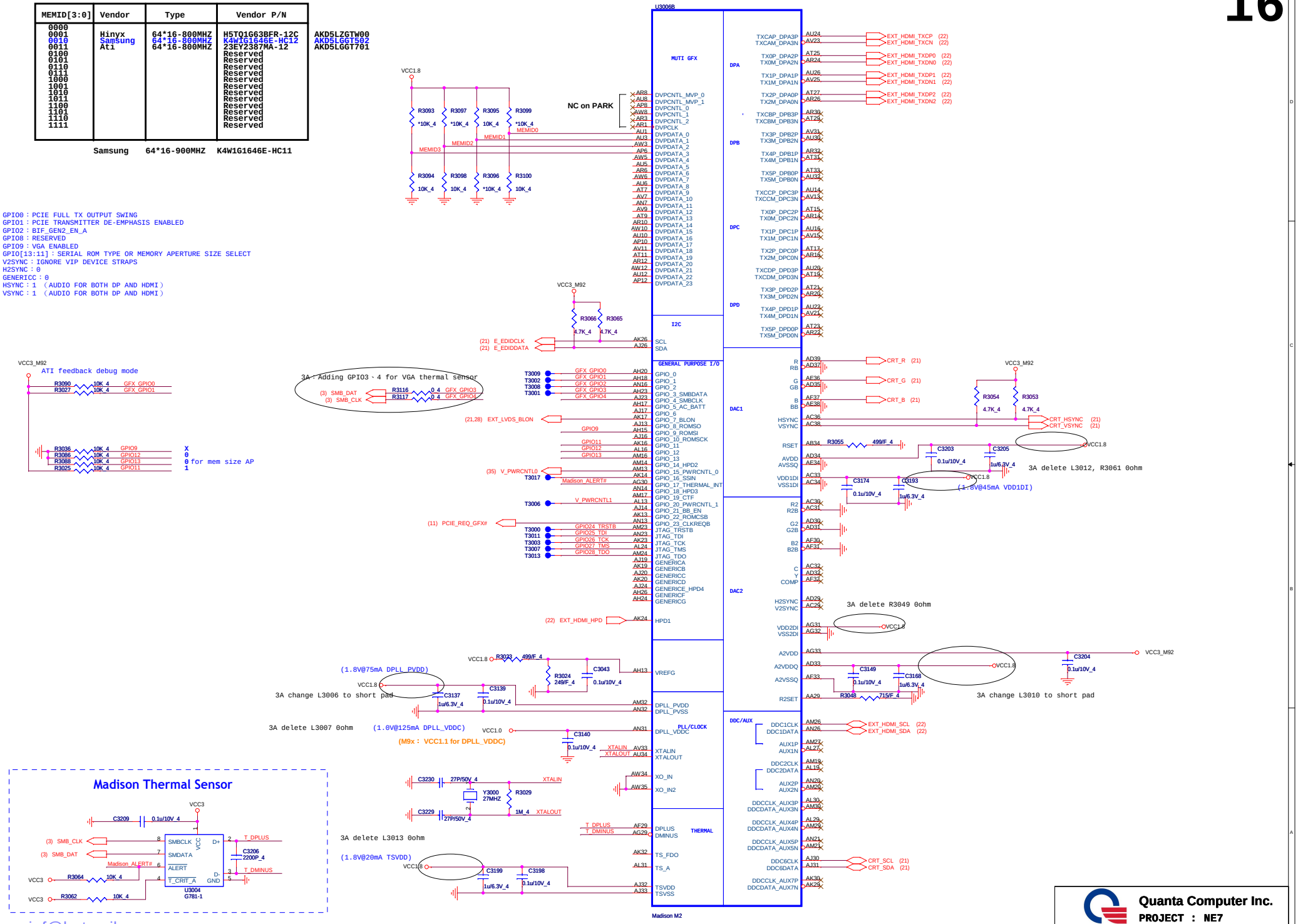

1.Level 1 Environment-related Substances Should NEVER be Used.
2.Purchase ink, paint, wire rods, and Molding resins only from the business Partners that Sony approves as Green Partners.

hexainf@hotmail.com
GRATIS - FREE

M@ for Madison level

layout issue
remove R387

(For Park&DDR3, VDDR = 1.5V@2.0A)

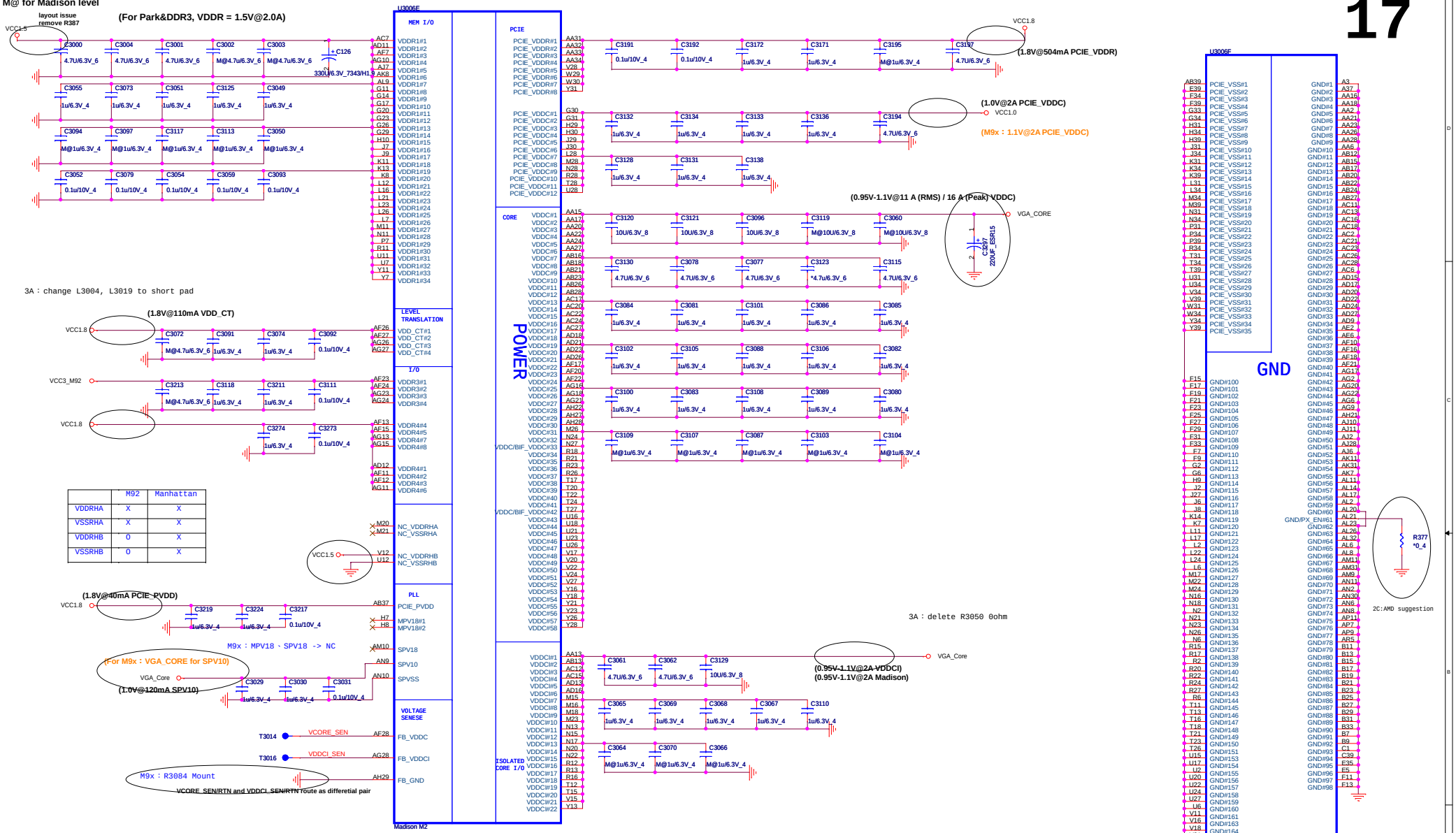

	M92	Manhattan
VDDRHA	X	X
VSSRHA	X	X
VDDRHB	O	X
VSSRHB	O	X

1.Level 1 Environment-related Substances Should NEVER be Used.
2.Purchase ink, paint, wire rods, and Molding resins only from the business Partners that Sony approves as Green Partners.

Quanta Computer Inc.
PROJECT : NE7

Size	Document Number	Rev
	ATI POWER/GND	3A

Date: Monday, March 22, 2010 Sheet 17 of 42

hexainf@hotmail.com
GRATIS - FREE

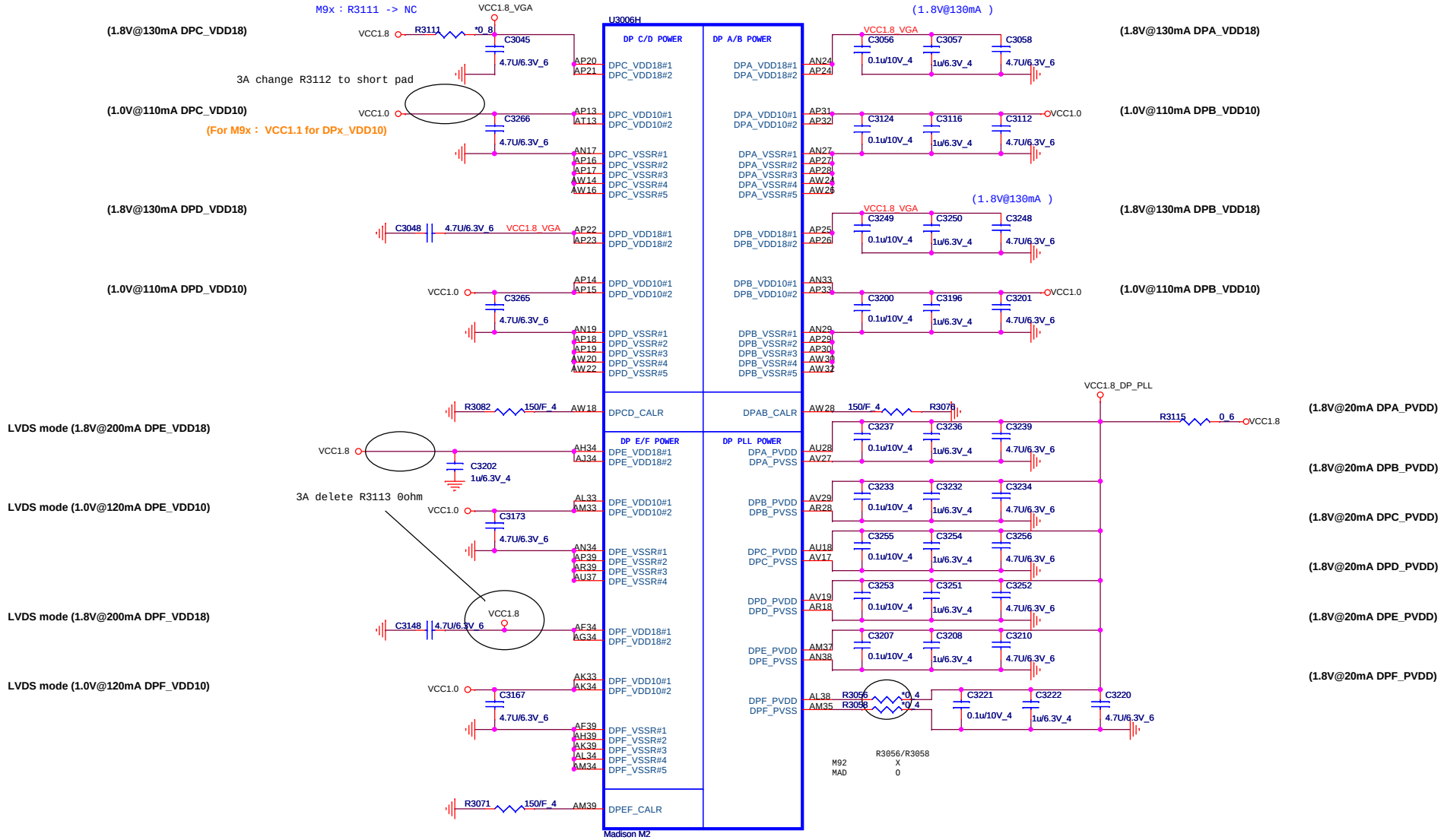

1.Level 1 Environment-related Substances Should NEVER be Used.
2.Purchase ink, paint, wire rods, and Molding resins only from the business Partners that Sony approves as Green Partners.

Quanta Computer Inc.

PROJECT : NE7

Size	Document Number	Rev
	ATI MEM/IF/DP	3A

Date: Monday, March 22, 2010 Sheet 18 of 42

Use this option ONLY for Park-S3

hexainf@hotmail.com
GRATIS - FREE

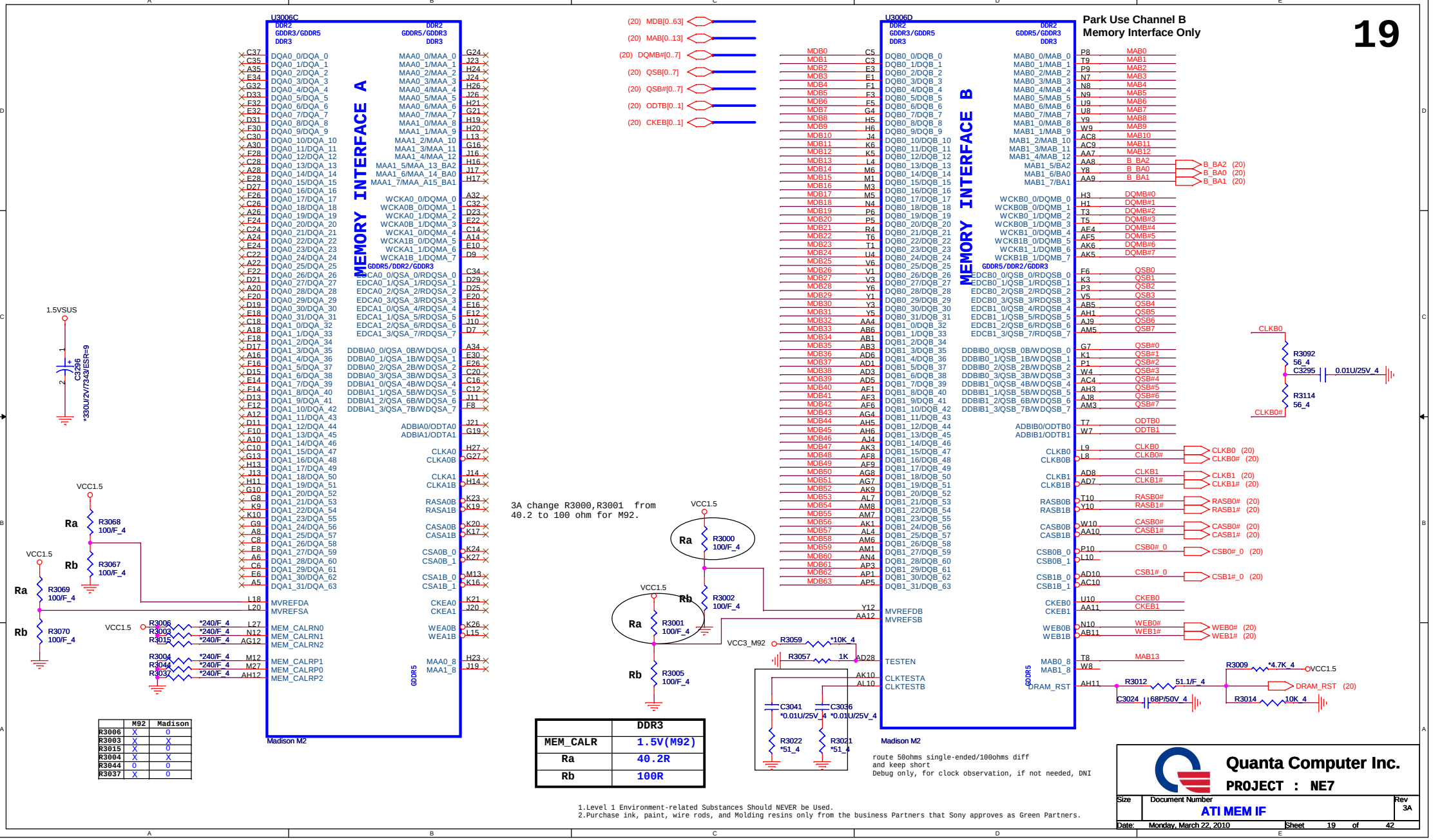

	M92	Madison
R3006	X	0
R3003	X	X
R3015	X	0
R3004	X	X
R3044	0	0
R3037	X	0

	DDR3
MEM_CALR	1.5V(M92)
Ra	40.2R
Rb	100R

1.Level 1 Environment-related Substances Should NEVER be Used.
2.Purchase ink, paint, wire rods, and Molding resins only from the business Partners that Sony approves as Green Partners.

Use this option ONLY
for Park-S3

hexainf@hotmail.com
GRATIS - FREE

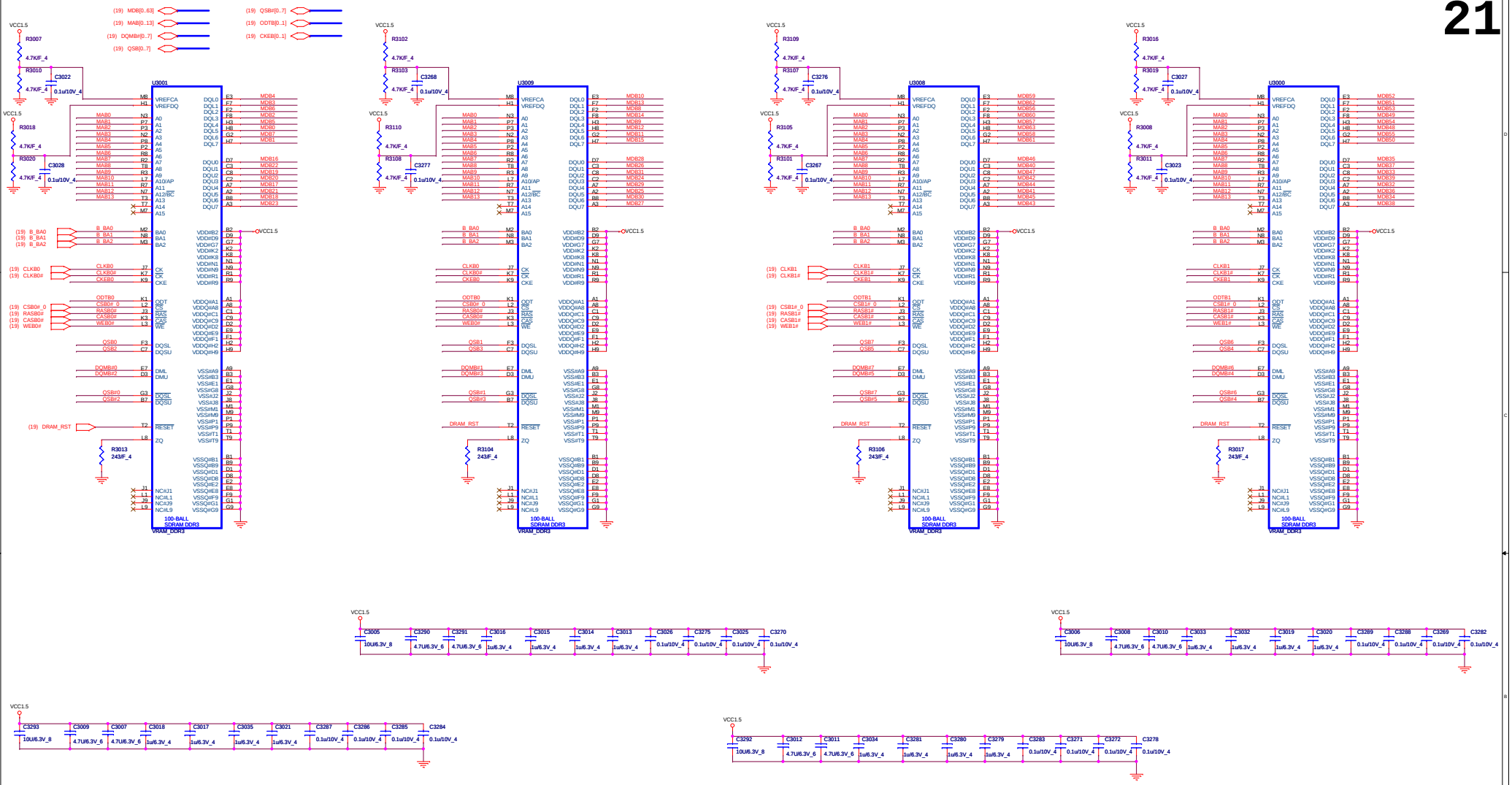

1.Level 1 Environment-related Substances Should NEVER be Used.
2.Purchase ink, paint, wire rods, and Molding resins only from the business Partners that Sony approves as Green Partners.

Quanta Computer Inc.
PROJECT : NE7

Size	Document Number	Rev
	ATI VRAM DDR3	3A

Date: Monday, March 22, 2010 Sheet 20 of 42

hexainf@hotmail.com
GRATIS - FREE

CRT

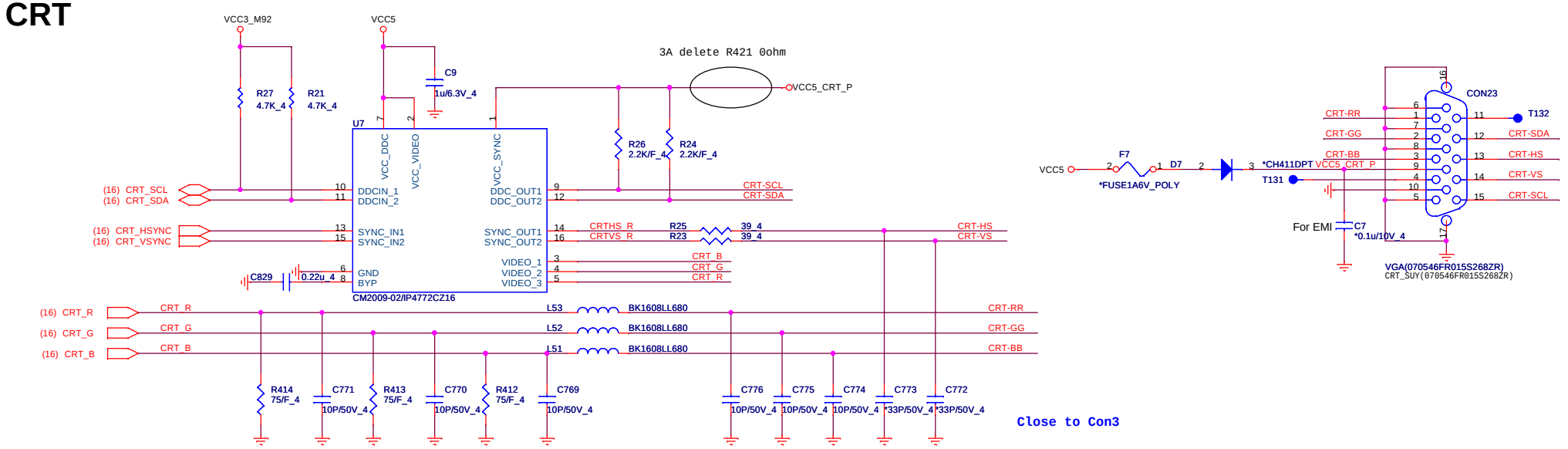

LVDS

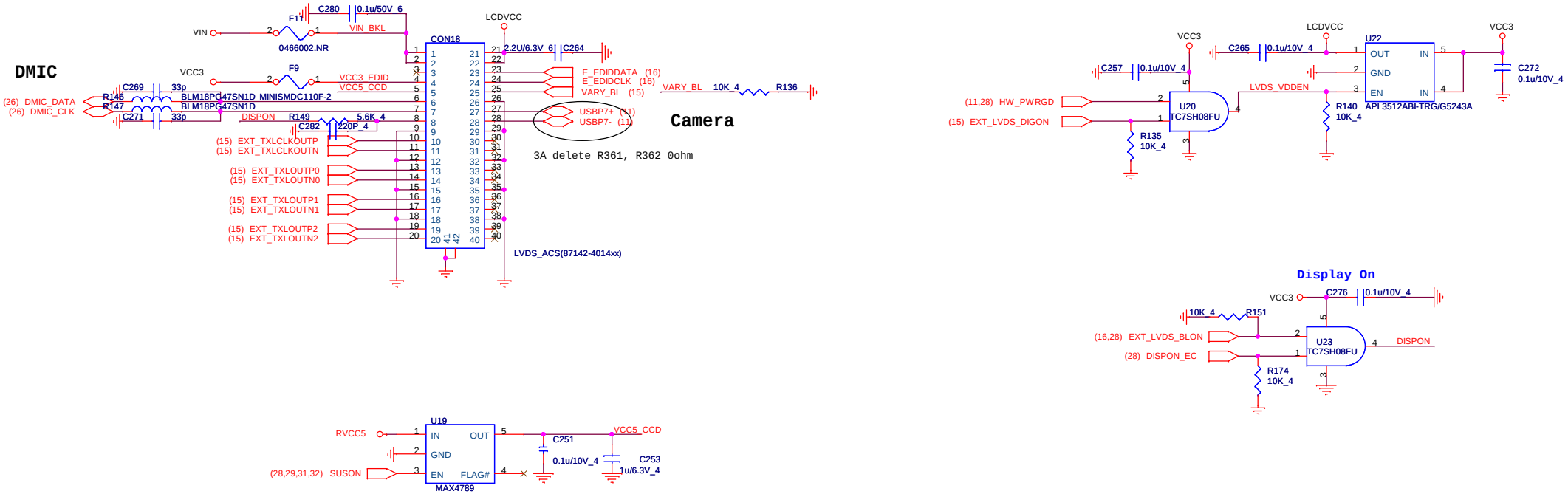

1.Level 1 Environment-related Substances Should NEVER be Used.
2.Purchase ink, paint, wire rods, and Molding resins only from the business Partners that Sony approves as Green Partners.

Quanta Computer Inc.		
PROJECT : NE7		
Size	Document Number: CRT/LVDS	Rev 3A
Date: Monday, March 22, 2010	Sheet 21 of 42	

hexainf@hotmail.com
GRATIS - FREE

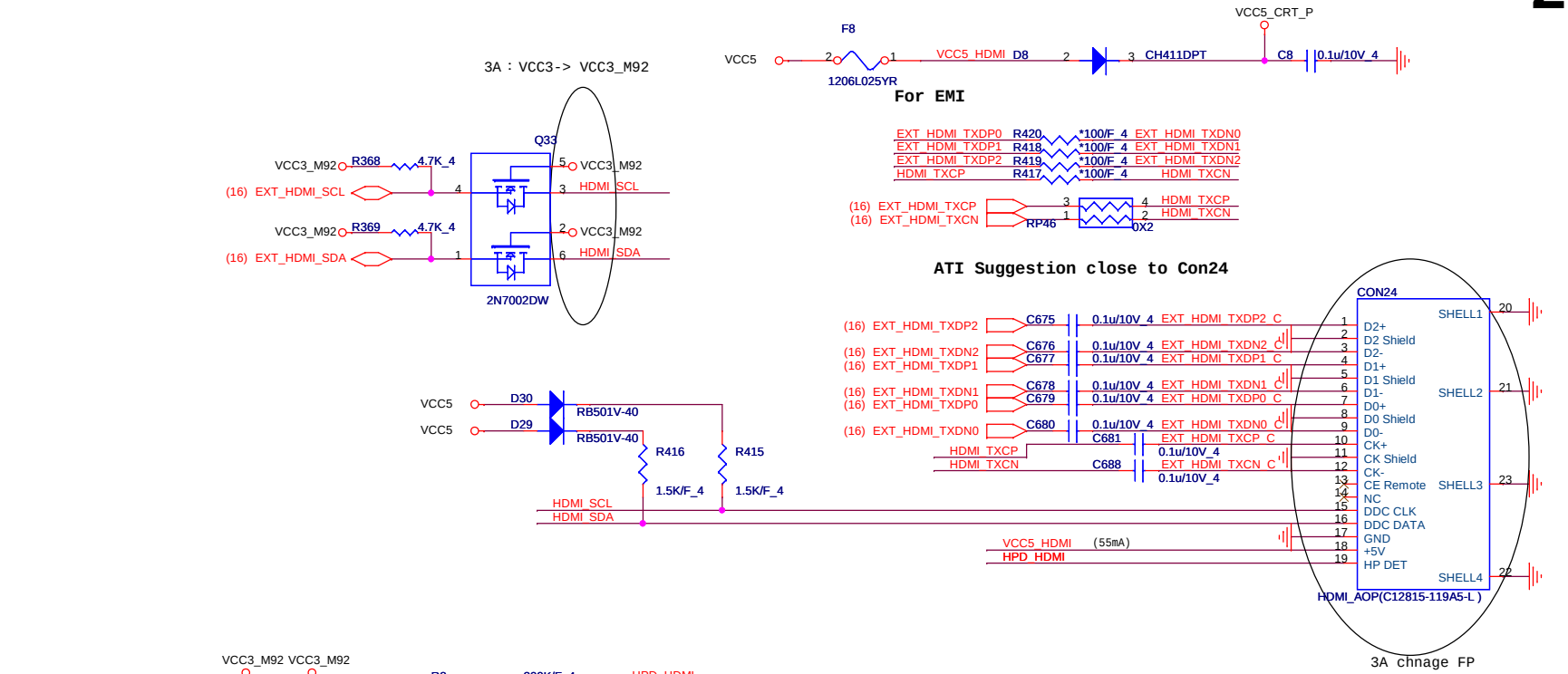

1.Level 1 Environment-related Substances Should NEVER be Used.
2.Purchase ink, paint, wire rods, and Molding resins only from the business Partners that Sony approves as Green Partners.

Quanta Computer Inc.

PROJECT : NE7

Size	Document Number	Rev
	HDMI	3A

Date: Monday, March 22, 2010 Sheet 22 of 42

hexainf@hotmail.com
GRATIS - FREE

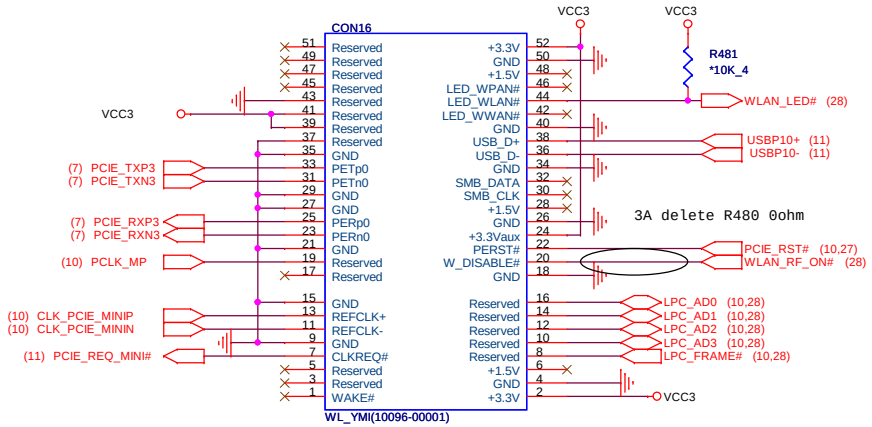

Win7 didn't support wake WLAN

3A change R252 to short pad.

Hunson: Remove short pad: R252

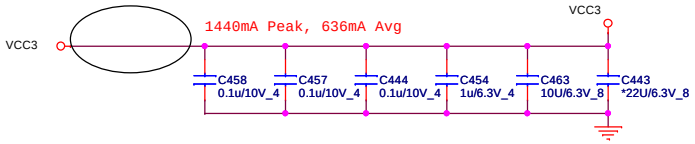

WLAN_BT_S/W

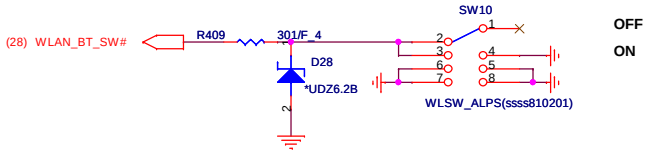

SATA ODD

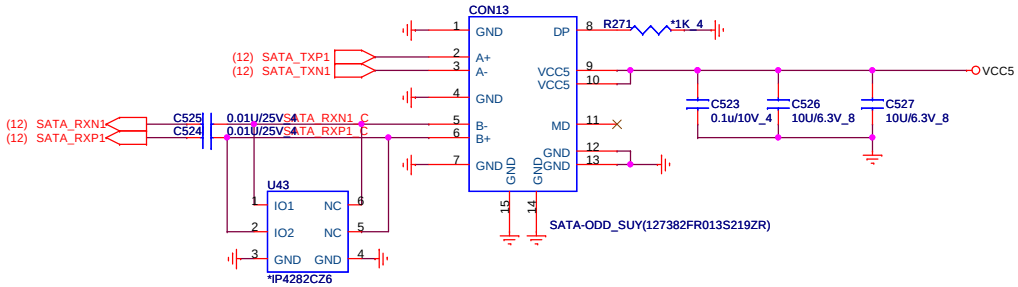

2.5 inch SATA HDD

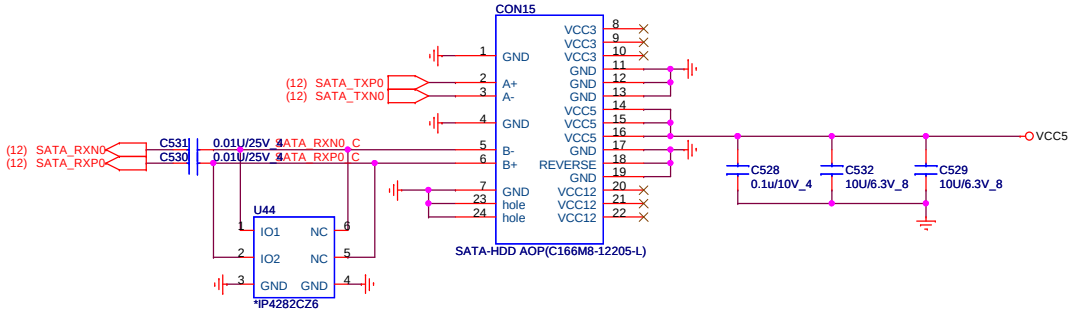

1.Level 1 Environment-related Substances Should NEVER be Used.
2.Purchase ink, paint, wire rods, and Molding resins only from the business Partners that Sony approves as Green Partners.

Quanta Computer Inc.

PROJECT : NE7

Size	Document Number	Rev
	WLAN/HDD/ODD	3A

Date: Monday, March 22, 2010 Sheet 23 of 42

hexainf@hotmail.com
GRATIS - FREE

3A change ML1 to short pad

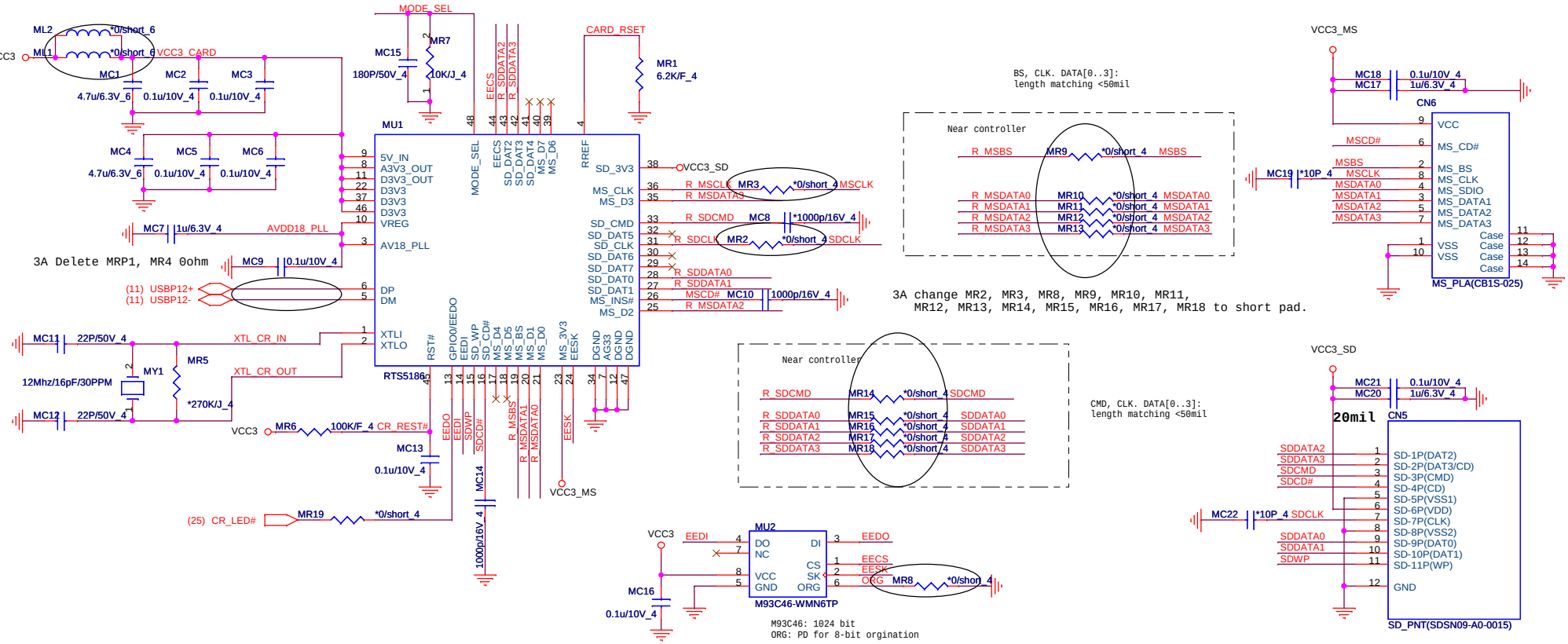

1.Level 1 Environment-related Substances Should NEVER be Used.
2.Purchase ink, paint, wire rods, and Molding resins only from the business Partners that Sony approves as Green Partners.

Quanta Computer Inc.

PROJECT : NE7

Size	Document Number	Rev
	CARD Reader	3A

Date: Monday, March 22, 2010 Sheet 24 of 42

hexainf@hotmail.com
GRATIS - FREE

Bluetooth

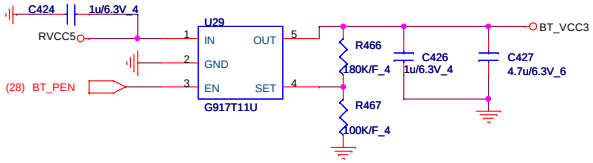

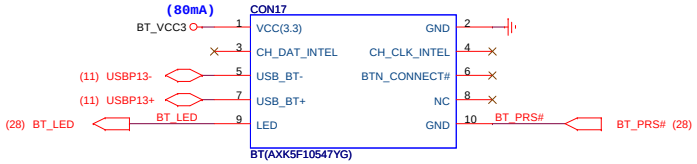

RF LED

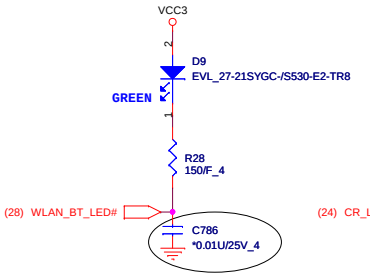

Card LED

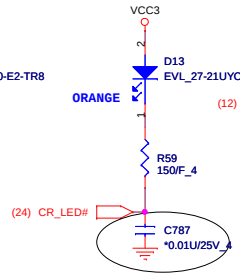

3A : Reverse C786, C787, C788 FP for ESD

HDD LED

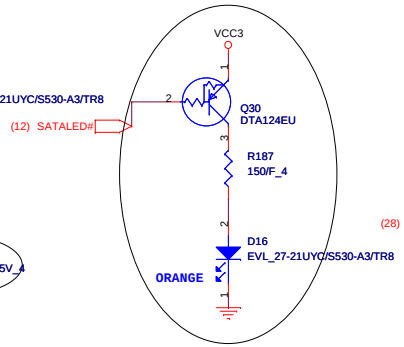

3A : adding Q30 for ESD.

Battery LED

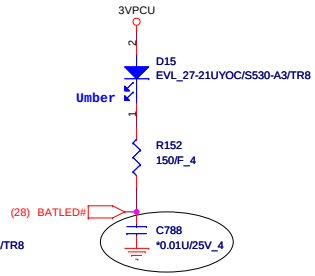

1.Level 1 Environment-related Substances Should NEVER be Used.
2.Purchase ink, paint, wire rods, and Molding resins only from the business Partners that Sony approves as Green Partners.

Quanta Computer Inc.

PROJECT : NE7

Size	Document Number	Rev
	Express Card/LED/TP	3A

Date: Monday, March 22, 2010 Sheet 25 of 42

hexainf@hotmail.com
GRATIS - FREE

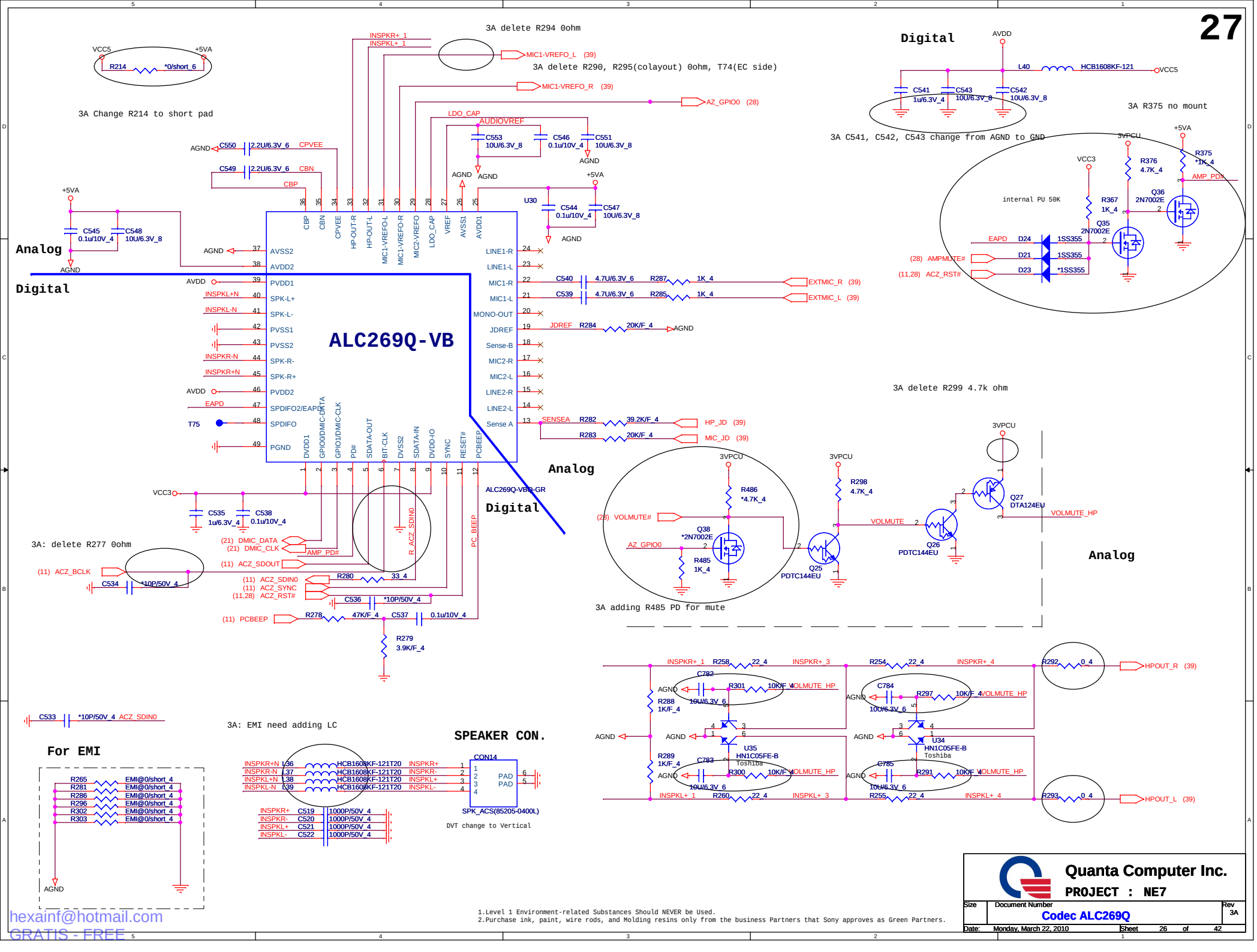

1.Level 1 Environment-related Substances Should NEVER be Used.
2.Purchase ink, paint, wire rods, and Molding resins only from the business Partners that Sony approves as Green Partners.

Quanta Computer Inc.

PROJECT : NE7

Size	Document Number	Rev
	Codec ALC269Q	3A

Date: Monday, March 22, 2010 Sheet 26 of 42

hexainf@hotmail.com
GRATIS - FREE

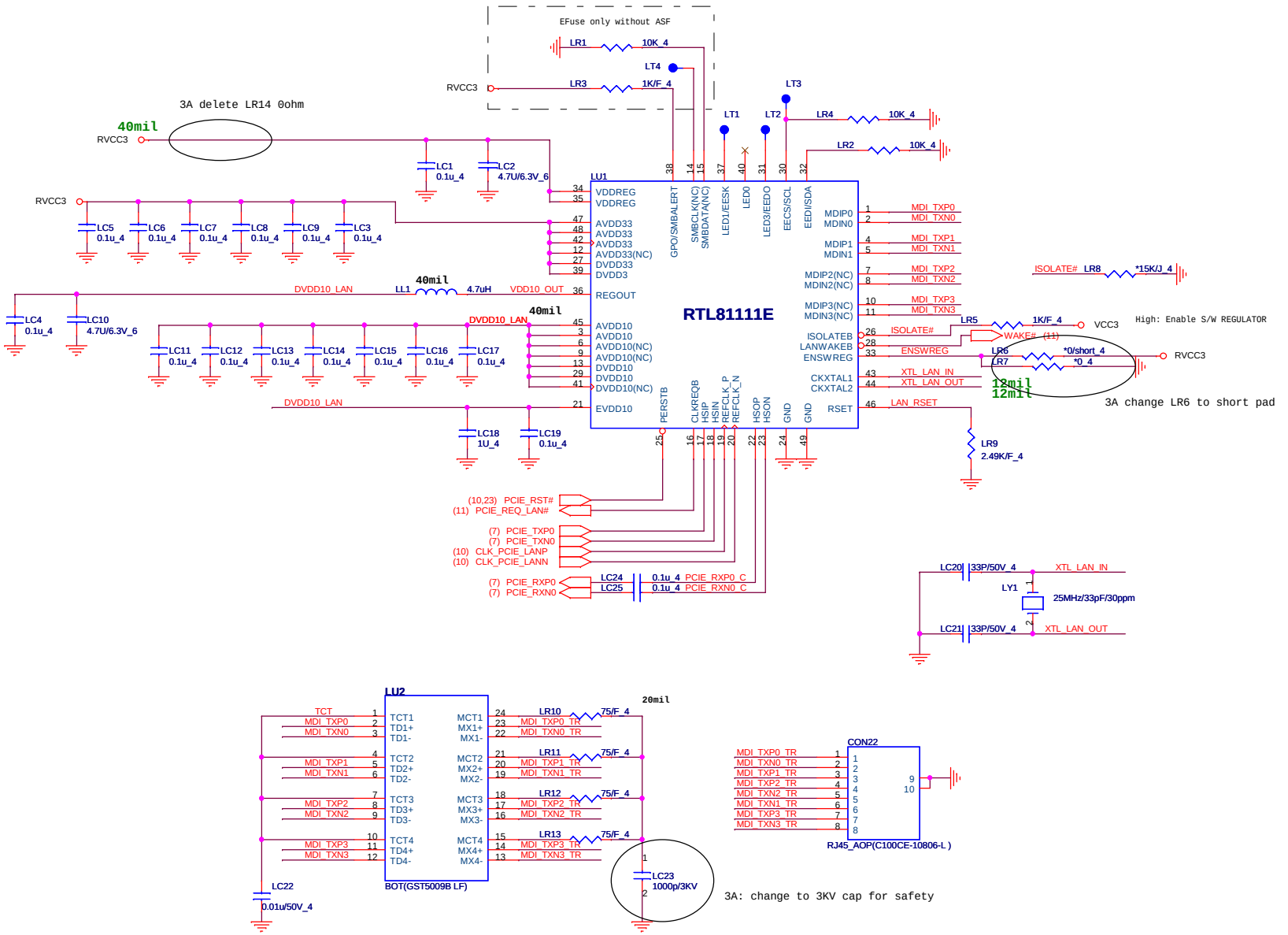

1.Level 1 Environment-related Substances Should NEVER be Used.
2.Purchase ink, paint, wire rods, and Molding resins only from the business Partners that Sony approves as Green Partners.

Quanta Computer Inc.

PROJECT : NE7

Size	Document Number	Rev
	LAN RTL8111E	3A

Date: Monday, March 22, 2010 Sheet 27 of 42

hexainf@hotmail.com
GRATIS - FREE

I/O Address		
BADDR1-0	Index	Data
* 1 0	2E	2F
1 1	4E	4F
0 0	(HCFGBAH, HCFGBAL)	(HCFGBAH, HCFGBAL)+1
0 1	XOR-TREE TEST	

SHMB: SHBM(If = 0 Enable share host BIOS memory)

DOCK_RST# : BADDR0
T?: BADDR1

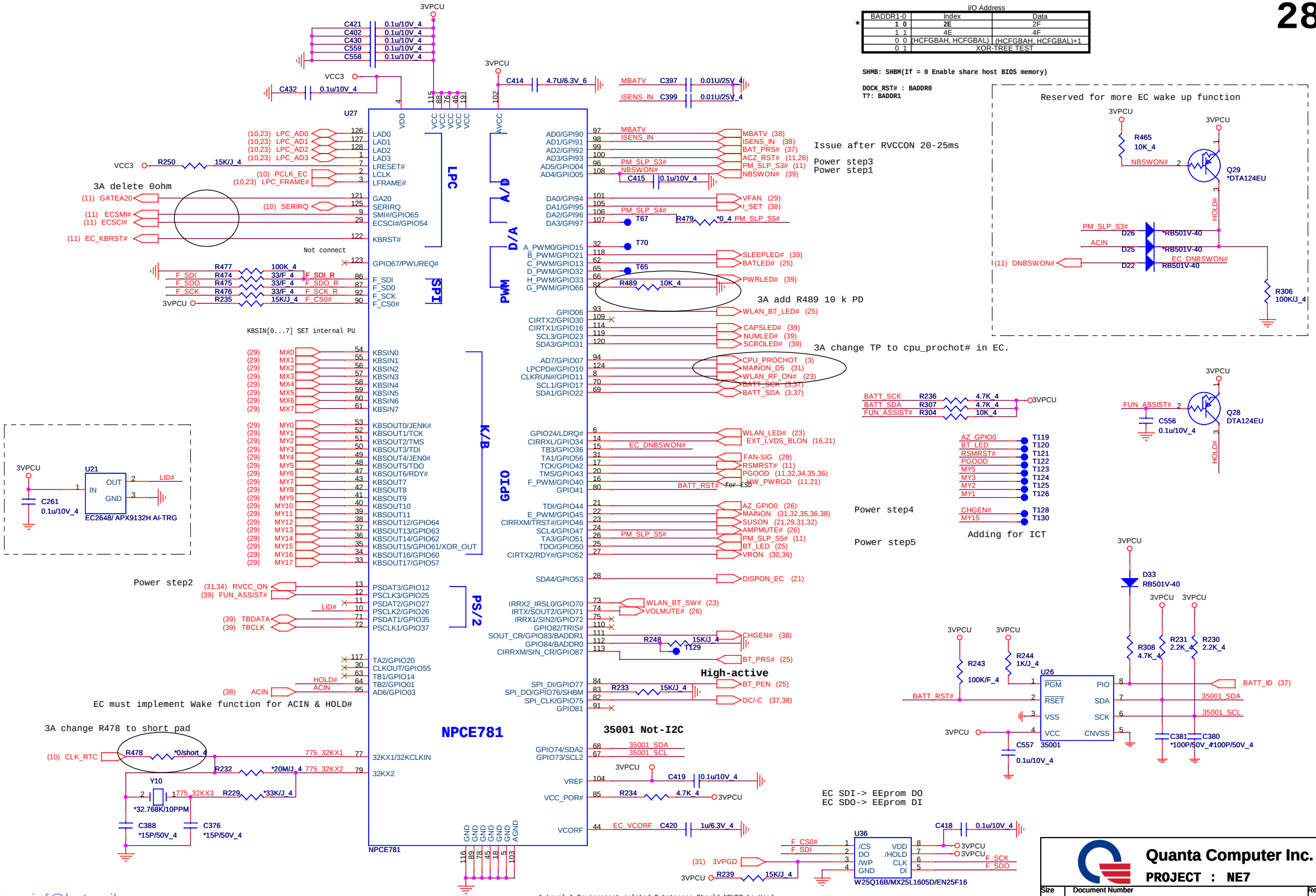

1.Level 1 Environment-related Substances Should NEVER be Used.
2.Purchase ink, paint, wire rods, and Molding resins only from the business Partners that Sony approves as Green Partners.

Quanta Computer Inc.

PROJECT : NE7

Size	Document Number	Rev
	NPCE781 & FLASH	3A

Date: Monday, March 22, 2010 Sheet 28 of 42

hexainf@hotmail.com
GRATIS - FREE

KEYBOARD

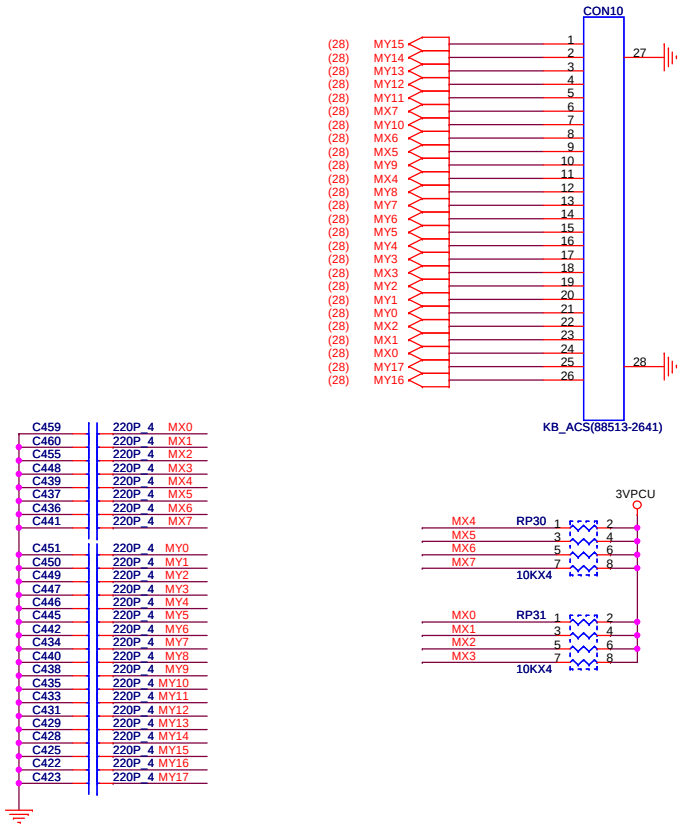

USB Port + e-SATA(USB)

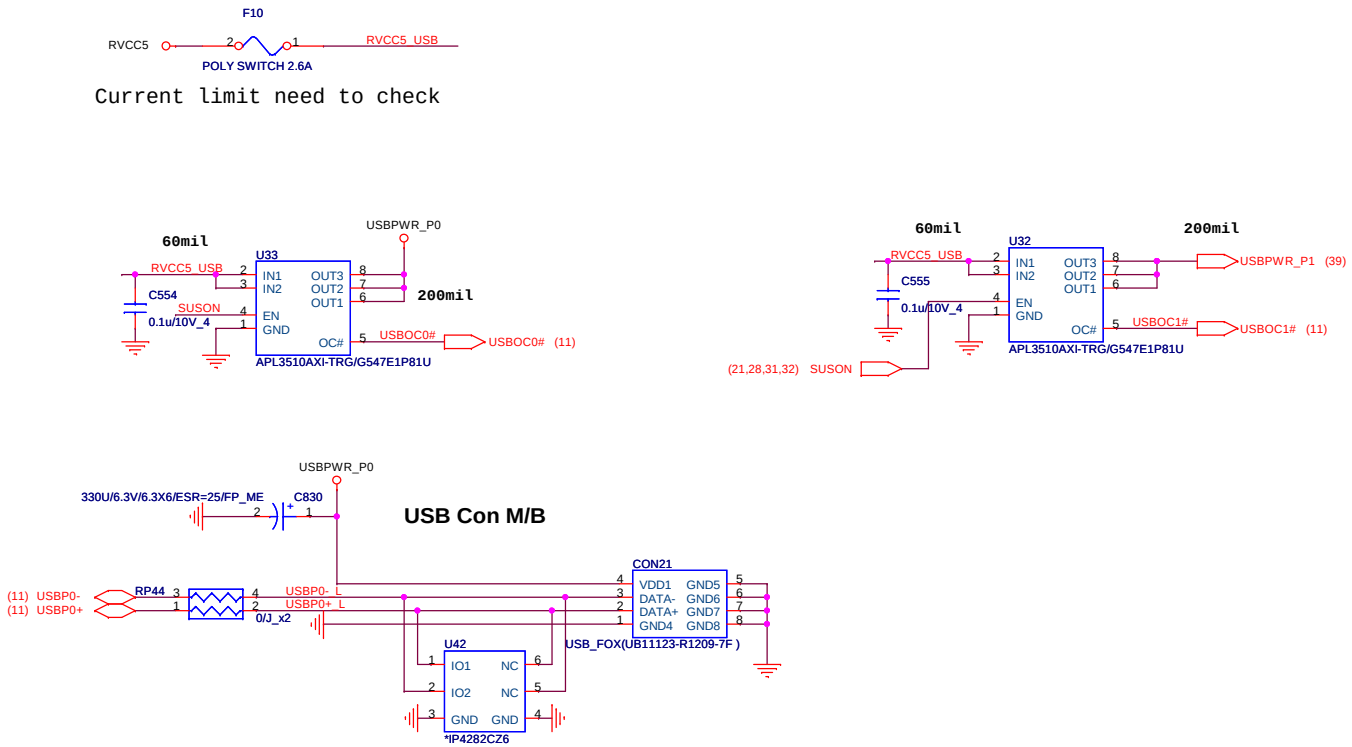

FAN

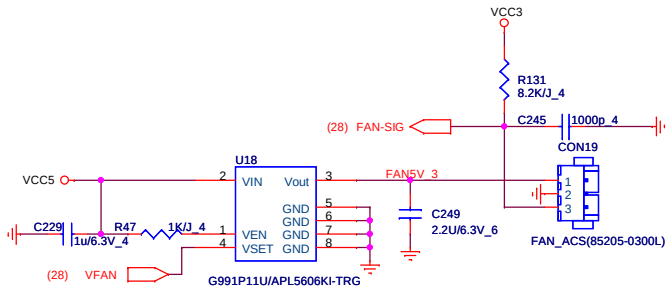

1.Level 1 Environment-related Substances Should NEVER be Used.
2.Purchase ink, paint, wire rods, and Molding resins only from the business Partners that Sony approves as Green Partners.

Quanta Computer Inc.		
PROJECT : NE7		
Size	Document Number: KB/USB/FAN/PS	Rev 3A
Date: Monday, March 22, 2010	Sheet 29 of 42	

hexainf@hotmail.com
GRATIS - FREE

ISL6265 Pin1	OFS	VFIXEN
1.2V	V	X
3.3V	X	V
5V	X	X

VFIXEN VID Codes

SVC	SVD	Output
0	0	1.4
0	1	1.2
1	0	1.0
1	1	0.8

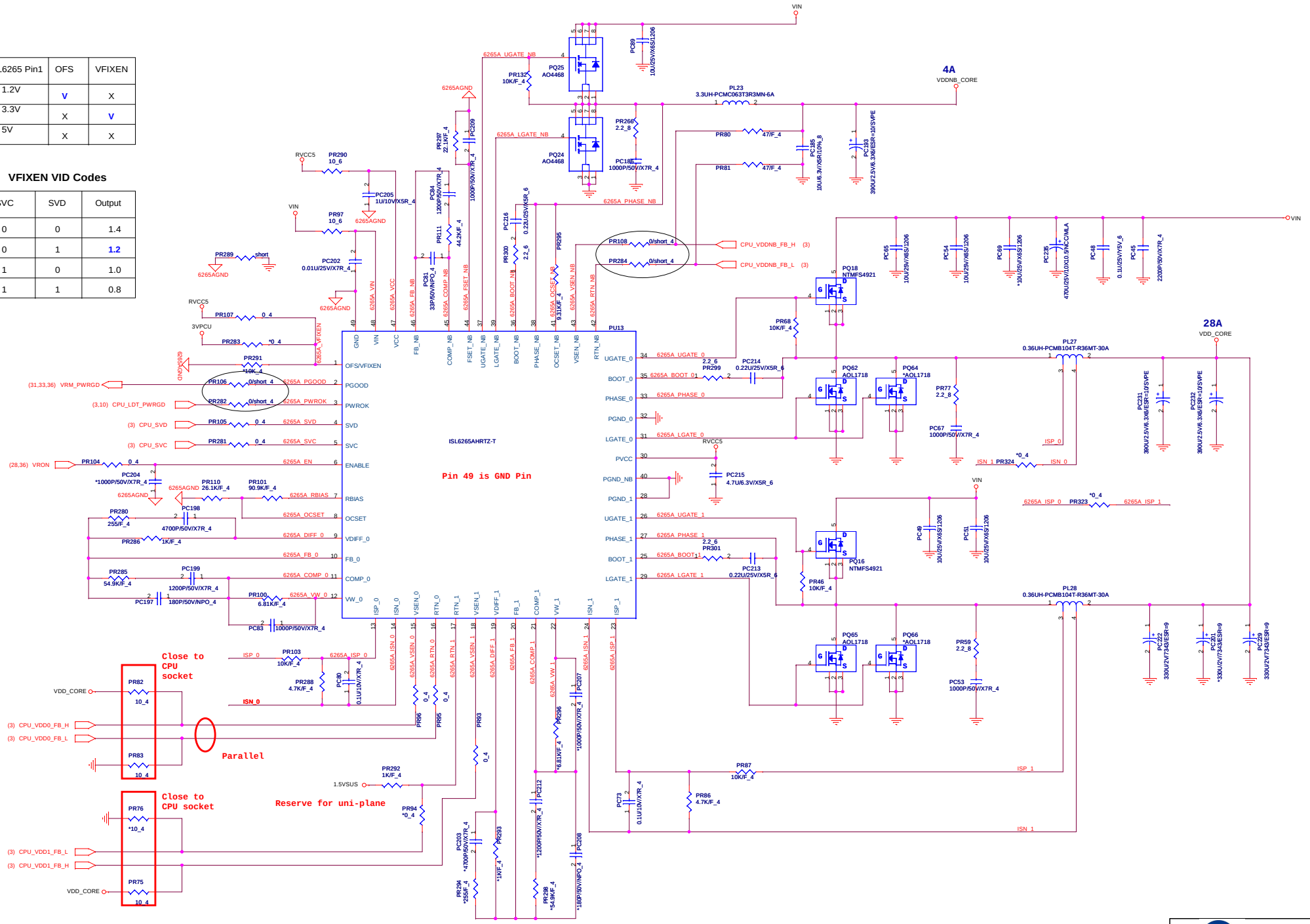

1.Level 1 Environment-related Substances Should NEVER be Used.
2.Purchase ink, paint, wire rods, and Molding resins only from the business Partners that Sony approves as Green Partners.

Quanta Computer Inc.
PROJECT : NE7

Size	Document Number	Rev
	VCORE(ISL6265A)	3A

Date: Monday, March 22, 2010 Sheet 30 of 42

hexainf@hotmail.com
GRATIS - FREE

3.3V & 5V

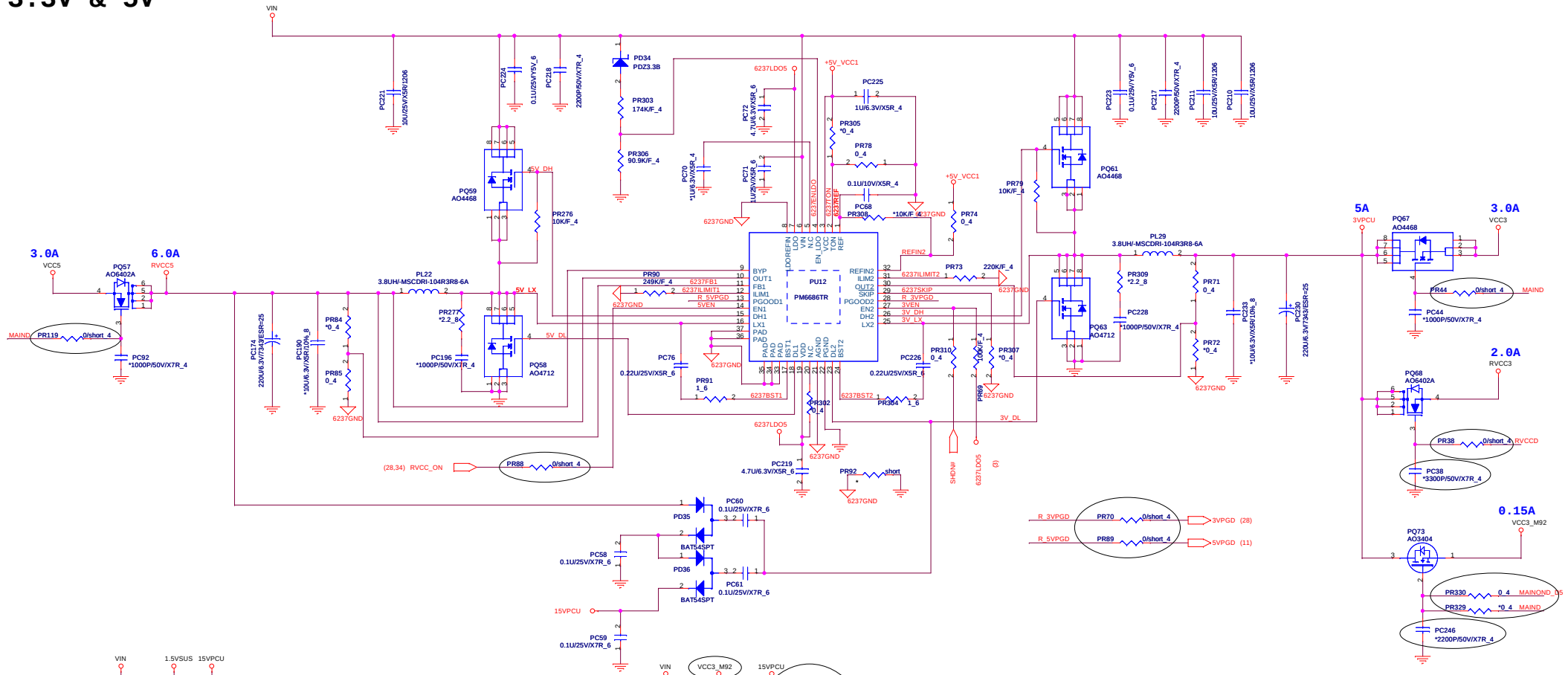

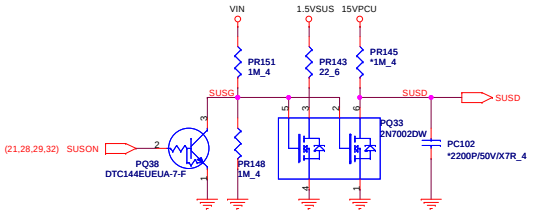

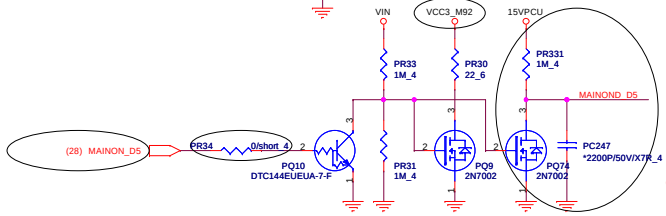

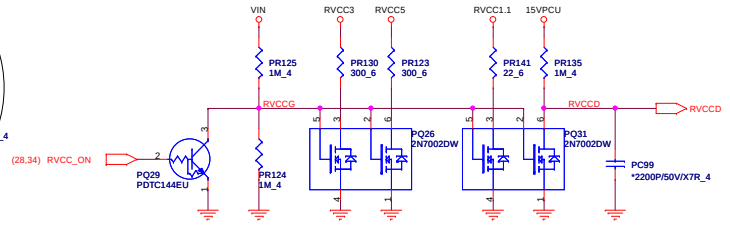

M92:
PR330= 0
PR329= N.I
PC246= N.I

Park/Madison:
PR330= N.I
PR329= 0 Ohm
PC246= N.I

Jerry change footprint to be UMT_213-3-1_3

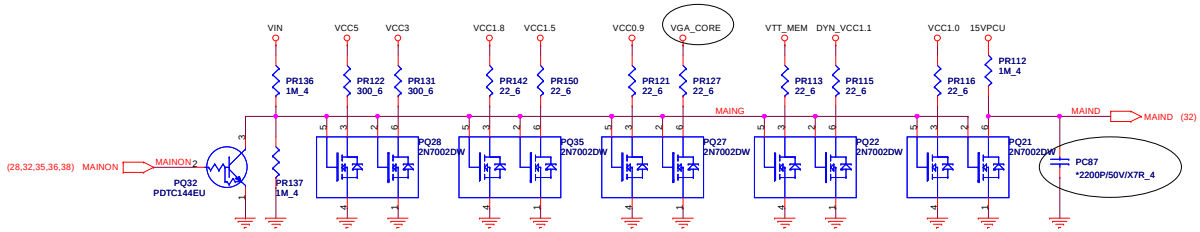

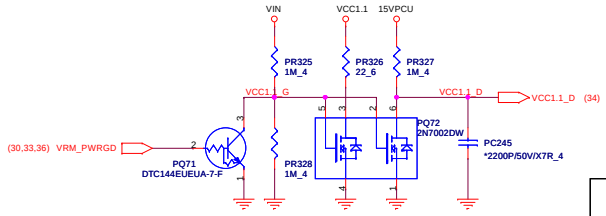

1.Level 1 Environment-related Substances Should NEVER be Used.
2.Purchase ink, paint, wire rods, and Molding resins only from the business Partners that Sony approves as Green Partners.

Quanta Computer Inc.
PROJECT : NE7

Size	Document Number	Rev
	3VPCU&5VPCU(PM6686)	3A

Date: Monday, March 22, 2010 Sheet 31 of 42

hexainf@hotmail.com
GRATIS - FREE

1.5VSUS & VTT_MEM

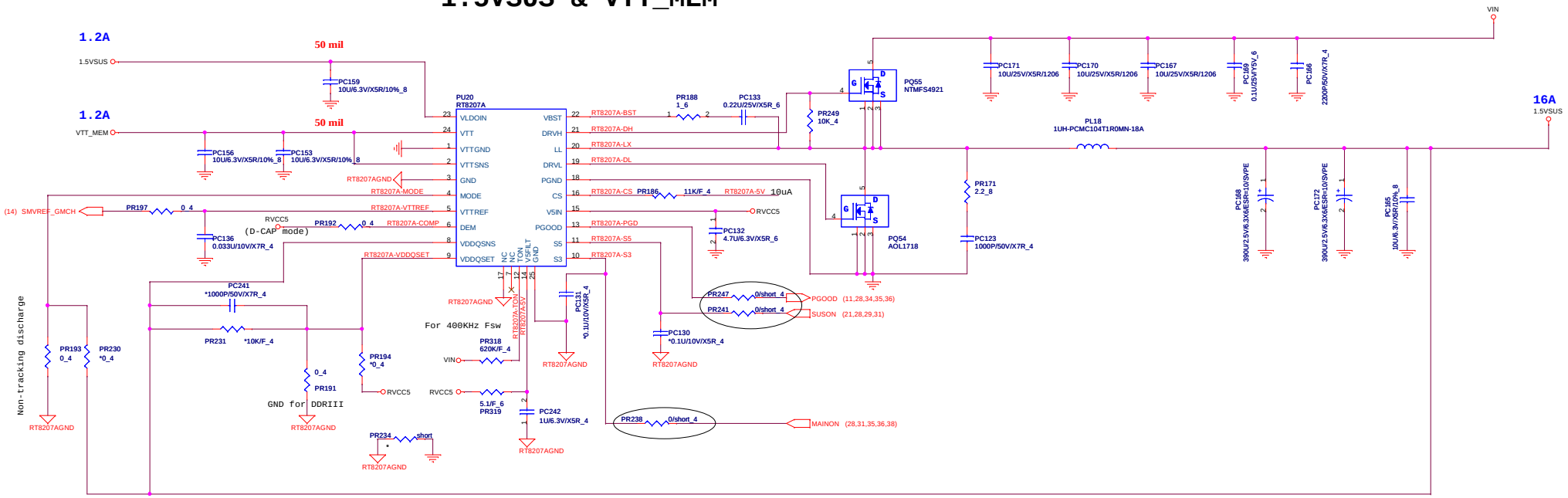

VCC1.5

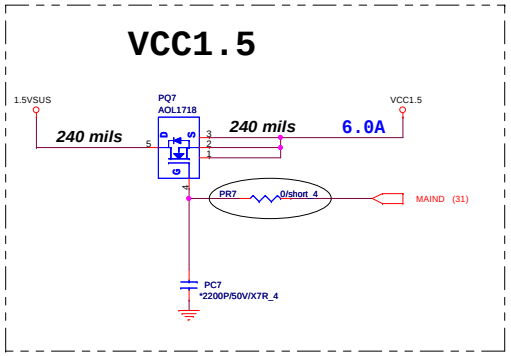

MODE	DISCHARGE MODE
+5V	No discharge
+1.8V	Tracking discharge
GND	Non-tracking discharge

VDDQSET	VDDQ(V)	VTTREF & VTT	NOTE
GND	1.5 fixed	VDDQSNS/2	DDR3
5V	1.8 fixed	VDDQSNS/2	DDR2
FB-Resistor	Adjustable	VDDQSNS/2	1.5V<VDDQ<3V

VTT = VTTREF = VDDQSNS/2 = 0.75V

STATE	S3	S5	1.5VSUS	VTTREF	VTT
S0	1	1	on	on	on
S3	0	1	on	on	off
S4/S5	0	0	off	off	off

1.Level 1 Environment-related Substances Should NEVER be Used.
2.Purchase ink, paint, wire rods, and Molding resins only from the business Partners that Sony approves as Green Partners.

Quanta Computer Inc.
PROJECT : NE7

Size	Document Number	Rev
	1.5VSUS/VTT_MEM	3A

Date: Monday, March 22, 2010 Sheet 32 of 42

hexainf@hotmail.com
GRATIS - FREE

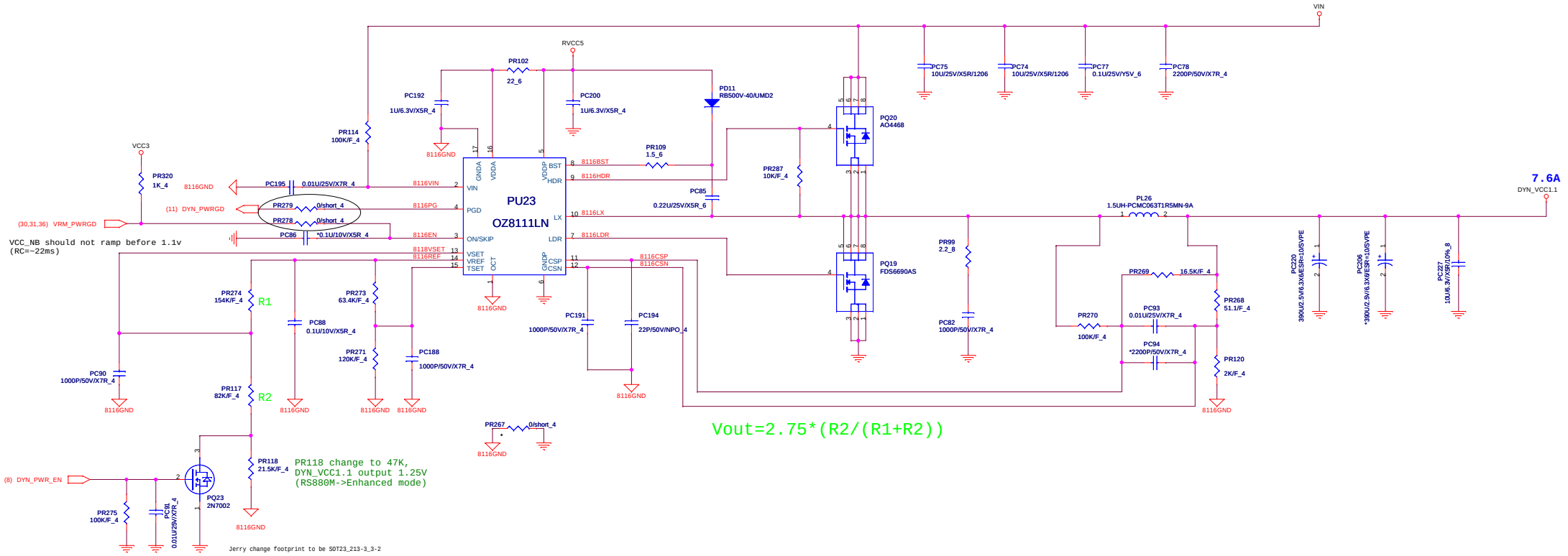

DYN_PWR_EN	High	Low
DYN_VCC1.1	0.95V	1.1V

1.Level 1 Environment-related Substances Should NEVER be Used.
2.Purchase ink, paint, wire rods, and Molding resins only from the business Partners that Sony approves as Green Partners.

Quanta Computer Inc.
PROJECT : NE7

Size	Document Number	Rev
	DYN_VCC1.1(OZ8116LN)	3A

Date: Monday, March 22, 2010 Sheet 33 of 42

hexainf@hotmail.com
GRATIS - FREE

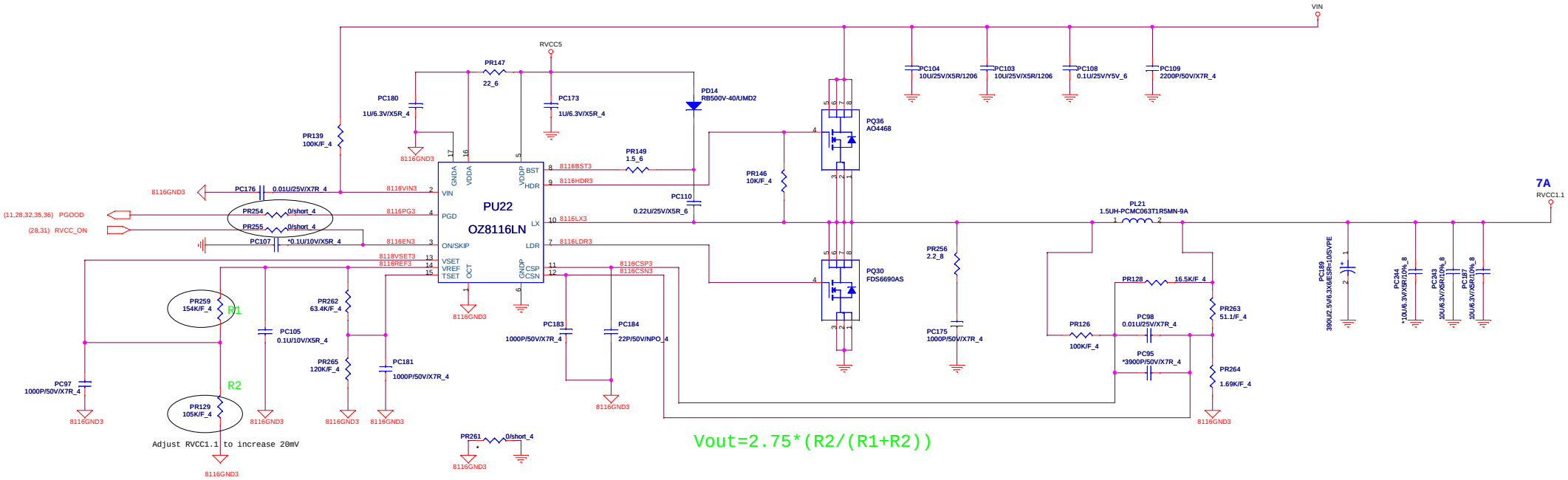

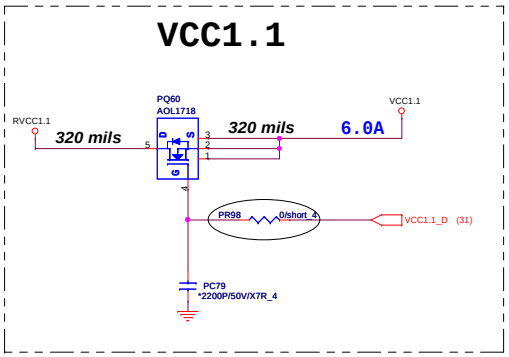

1.Level 1 Environment-related Substances Should NEVER be Used.
2.Purchase ink, paint, wire rods, and Molding resins only from the business Partners that Sony approves as Green Partners.

Quanta Computer Inc.
PROJECT : NE7

Size	Document Number	Rev
	VCC1.1(OZ8116LN)-7A	3A

Date: Monday, March 22, 2010 Sheet 34 of 42

hexainf@hotmail.com
GRATIS - FREE

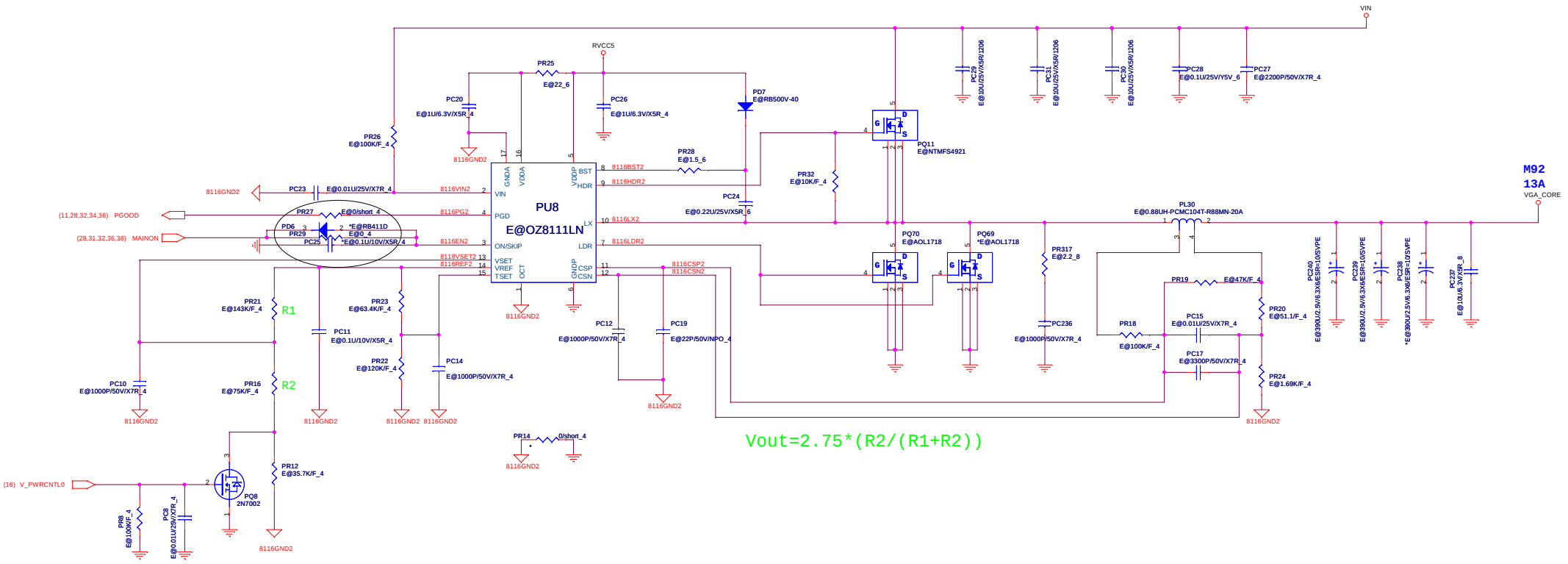

M92

External VGA_CORE Voltage Setting:

V_PWRCNTL0	VGA_CORE
0	1.20V
1	0.95V

1.Level 1 Environment-related Substances Should NEVER be Used.
2.Purchase ink, paint, wire rods, and Molding resins only from the business Partners that Sony approves as Green Partners.

Quanta Computer Inc.
PROJECT : NE7

Size	Document Number	Rev
	VGA_CORE(OZ8116)-16A	3A

Date: Monday, March 22, 2010 Sheet 35 of 42

hexainf@hotmail.com
GRATIS - FREE

VCC1.8

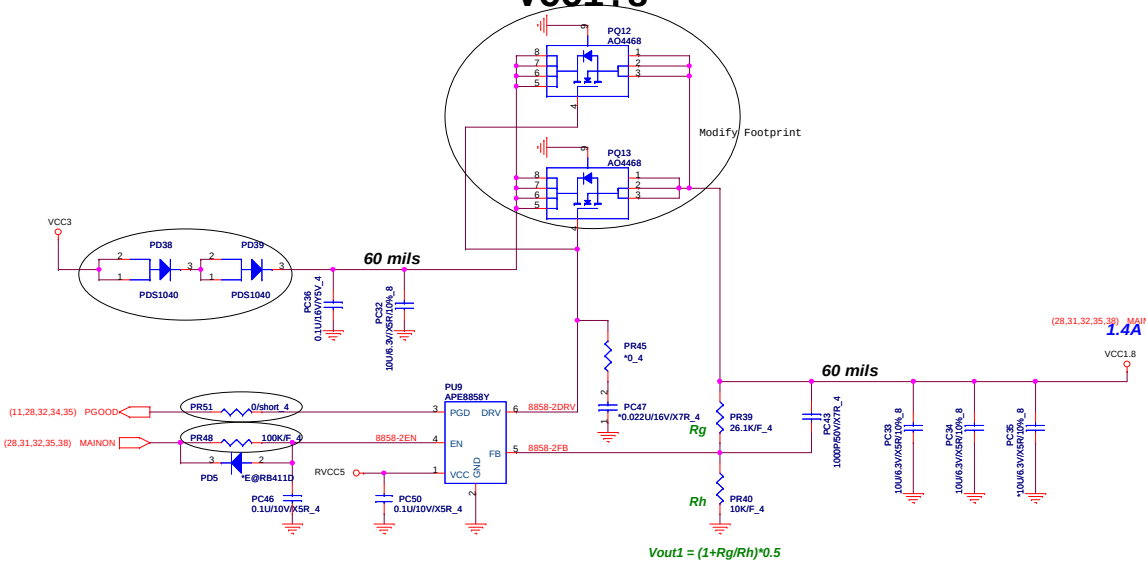

VCC1.0

NO change Vcc1.0 NET name
M9x : Vcc1.1
Manhatten : Vcc1.0
BOM control PR13 、PR17

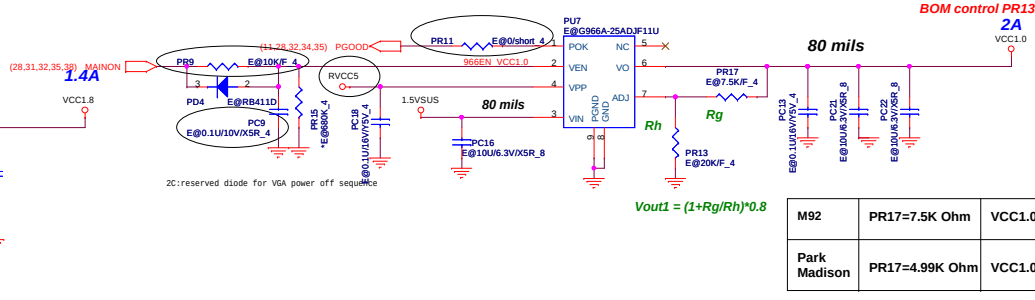

M92	PR17=7.5K Ohm	VCC1.0=1.1V
Park Madison	PR17=4.99K Ohm	VCC1.0=1.0V

VCC0.9

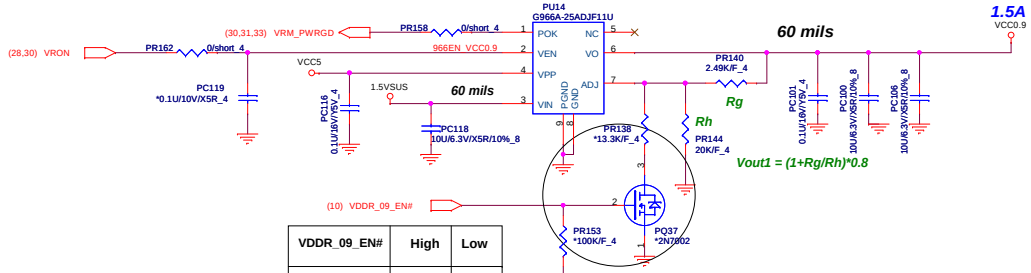

VDDR_09_EN#	High	Low
VCC0.9	1.05V	0.9V

VCC2.5

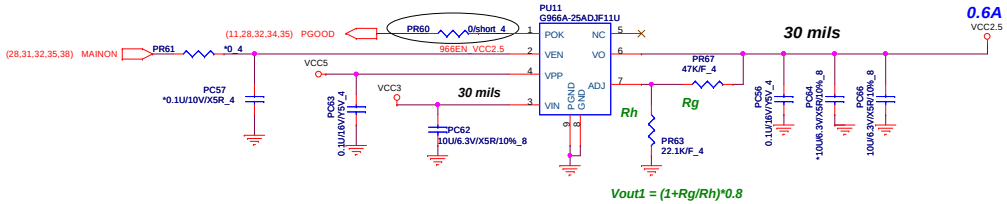

Thermal Protection for VEDS

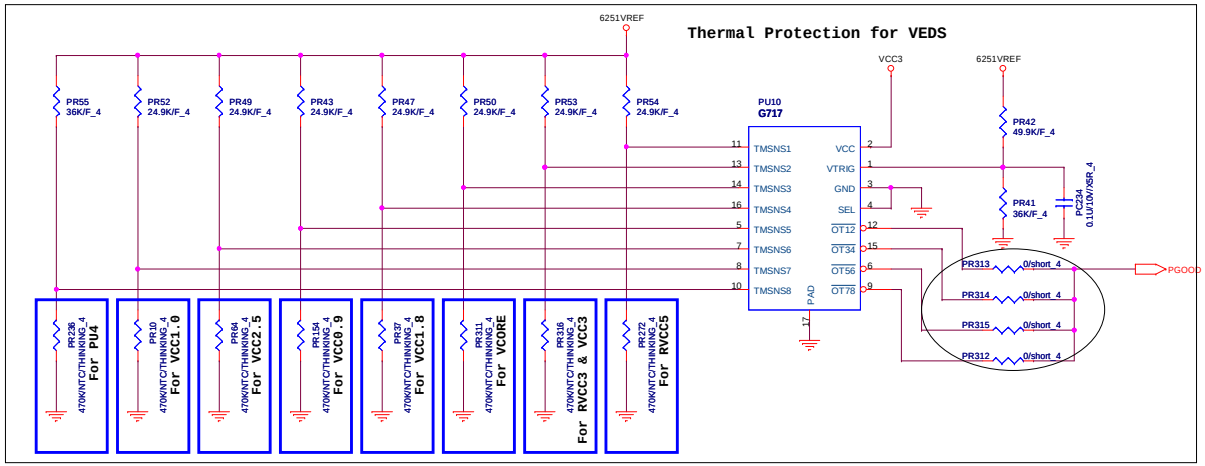

1.Level 1 Environment-related Substances Should NEVER be Used.
2.Purchase ink, paint, wire rods, and Molding resins only from the business Partners that Sony approves as Green Partners.

Quanta Computer Inc.
PROJECT : NE7

Size	Document Number	Rev
	VCC1.8/0.9/2.5/1.0	3A

Date: Monday, March 22, 2010 Sheet 36 of 42

hexainf@hotmail.com
GRATIS - FREE

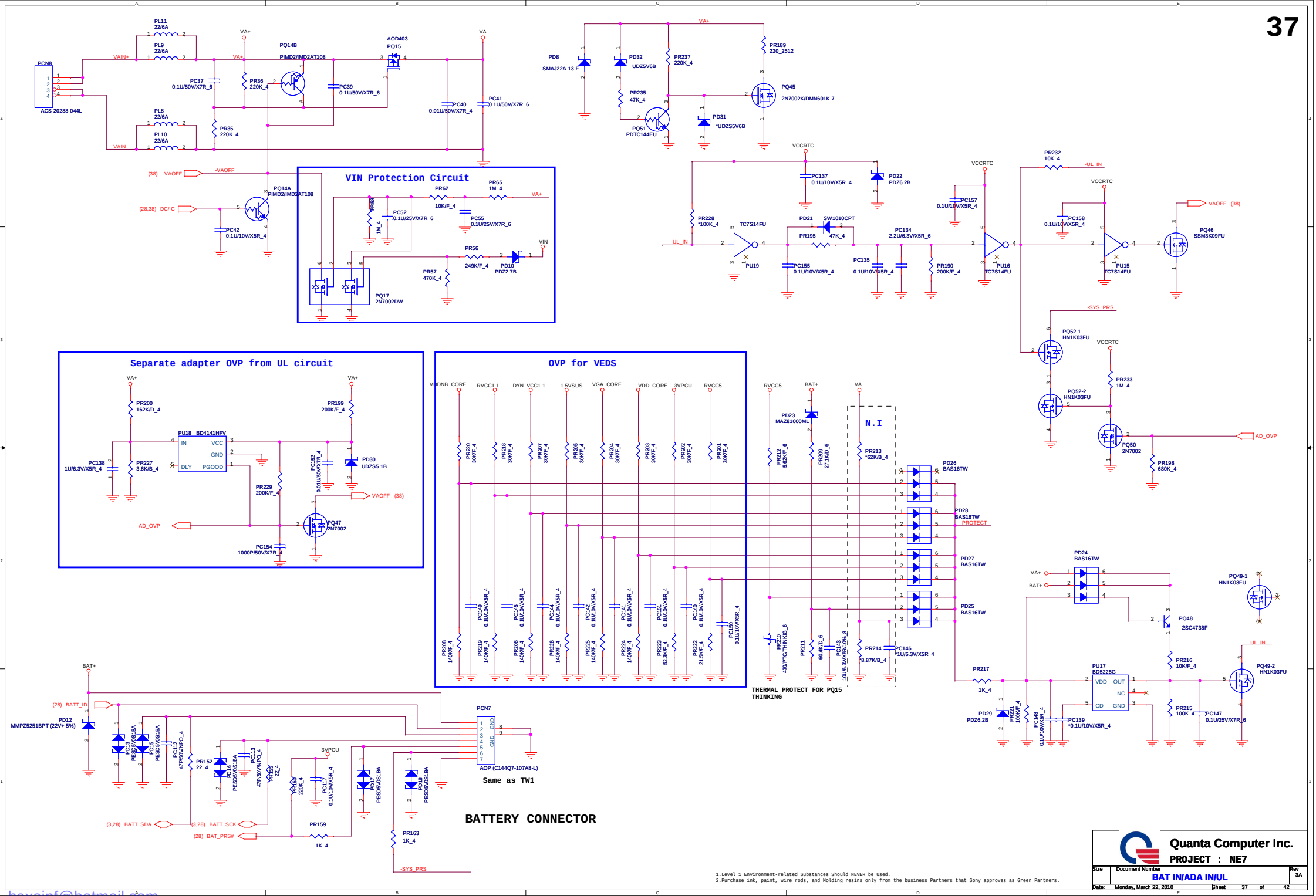

hexainf@hotmail.com
GRATIS - FREE

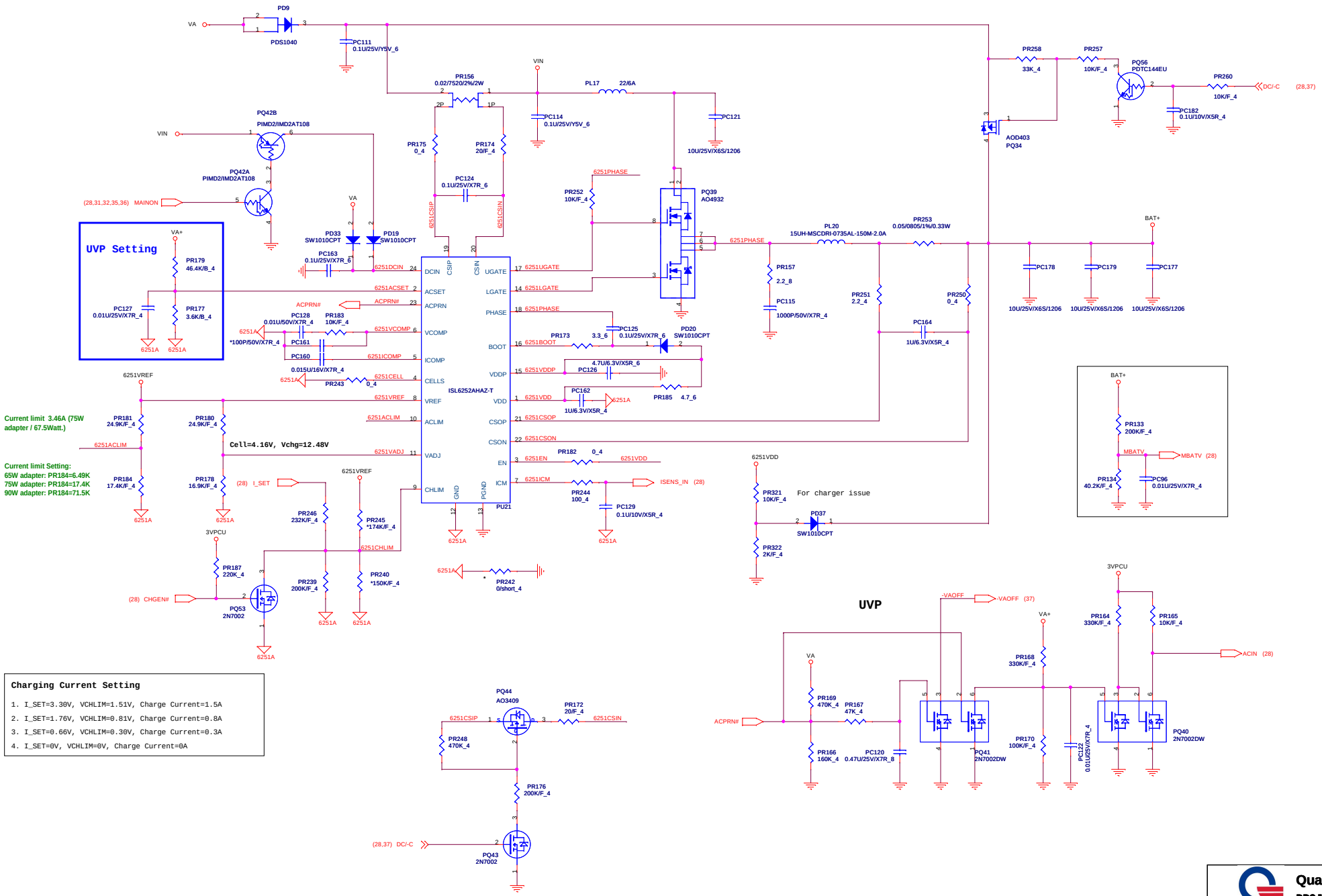

Charging Current Setting

1. I_SET=3.30V, VCHLIM=1.51V, Charge Current=1.5A
2. I_SET=1.76V, VCHLIM=0.81V, Charge Current=0.8A
3. I_SET=0.66V, VCHLIM=0.30V, Charge Current=0.3A
4. I_SET=0V, VCHLIM=0V, Charge Current=0A

1.Level 1 Environment-related Substances Should NEVER be Used.
2.Purchase ink, paint, wire rods, and Molding resins only from the business Partners that Sony approves as Green Partners.

Quanta Computer Inc.
PROJECT : NE8

Size	Document Number	Rev
	CHARGER(ISL6252A)	3A

Date: Monday, March 22, 2010 Sheet 38 of 42

hexainf@hotmail.com
GRATIS - FREE

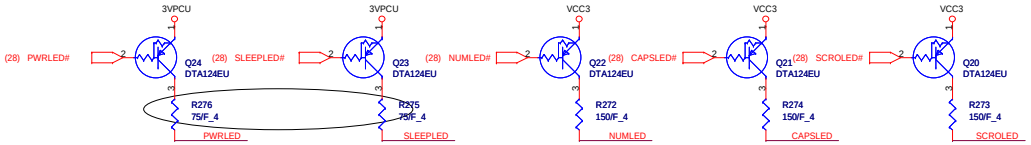

3A: R276/R275 change to 75 ohm for LED brightness

MB to LED board

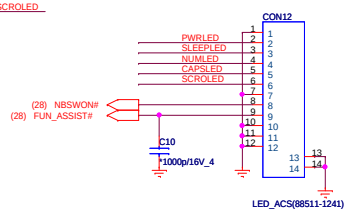

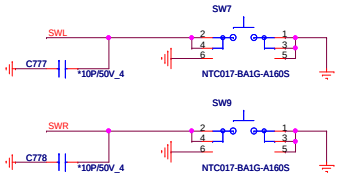

MB to TP connector

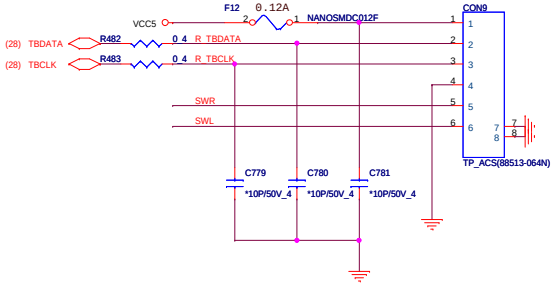

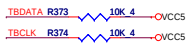

MB to USB board

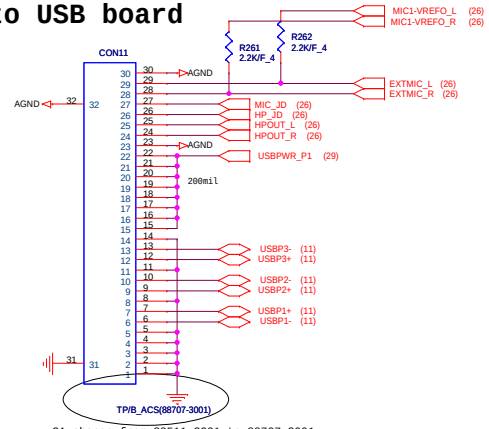

3A change from 88511-3001 to 88707-3001

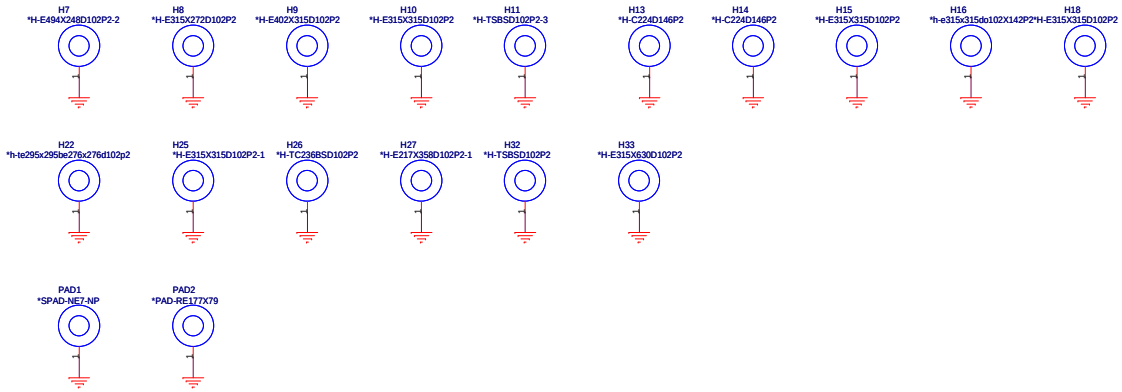

WLAN

BT

1.8V MOS

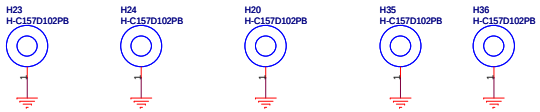

1.Level 1 Environment-related Substances Should NEVER be Used.
2.Purchase ink, paint, wire rods, and Molding resins only from the business Partners that Sony approves as Green Partners.

hexainf@hotmail.com
GRATIS - FREE

Quanta Computer Inc.		
PROJECT : NE7		
Size	Document Number: Small board	Rev 3A
Date: Monday, March 22, 2010	Sheet 39 of 42	

Decoulping Cap

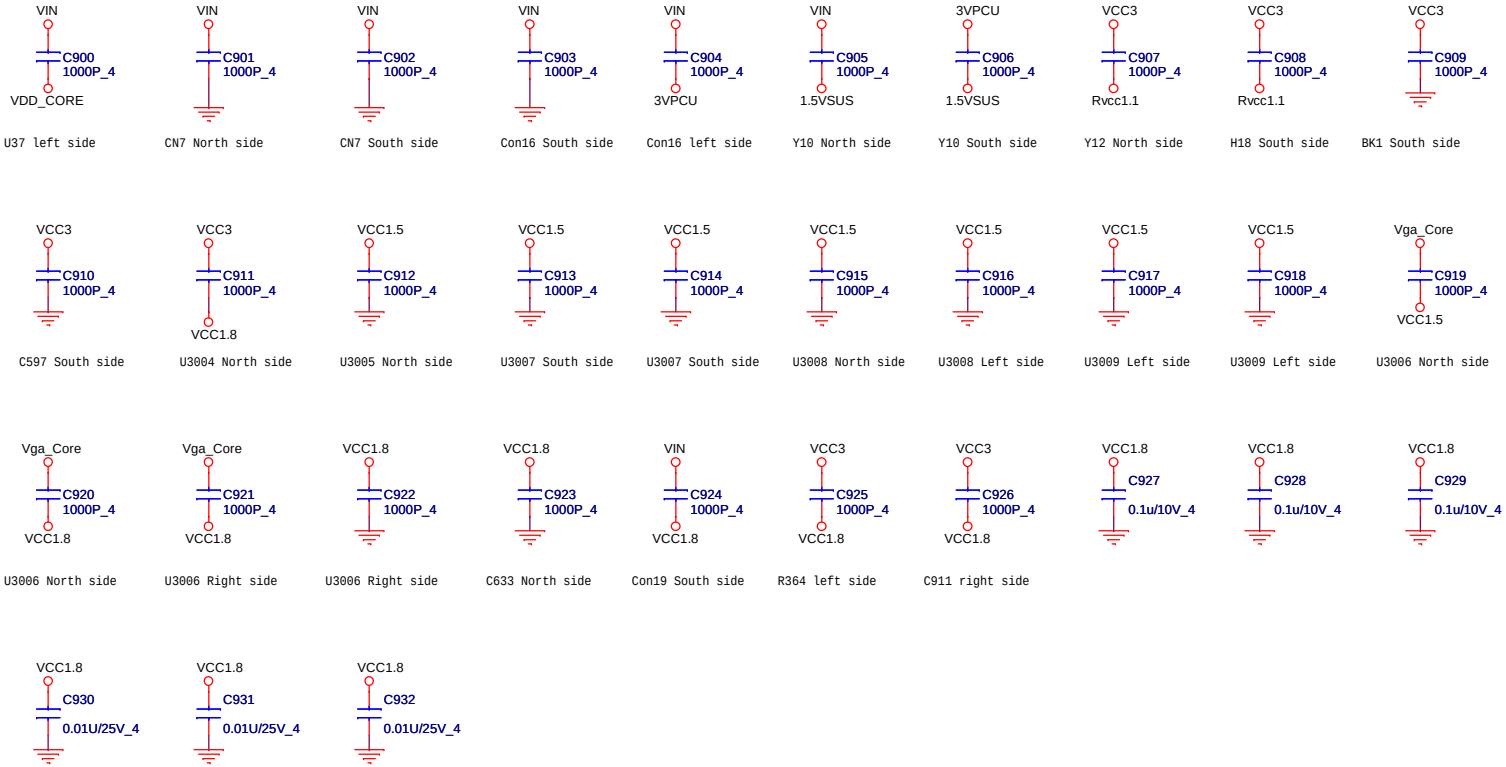

Power ripple

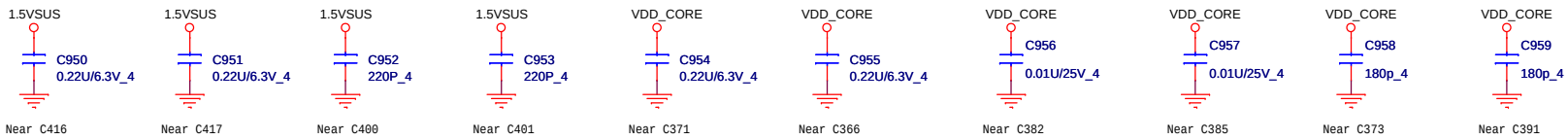

1.Level 1 Environment-related Substances Should NEVER be Used.
2.Purchase ink, paint, wire rods, and Molding resins only from the business Partners that Sony approves as Green Partners.

Quanta Computer Inc.
PROJECT : NE7

Size	Document Number	Rev
	Decoulping Cap	3A

Date: Monday, March 22, 2010 Sheet 40 of 42

hexainf@hotmail.com
GRATIS - FREE

Power on Sequence required:

SB800:
1, +3.3VDUAL ramp before +1.1VDUAL
2, +3.3V ramp before +1.8v
3, +1.8V ramp before +1.1v
4, +3.3v ramp before +1.1v
5, +3.3VALW_R ramping down time > 300us
6, 50uS <= All power rails except +3.3VALW_R <= 40mS
7, 100uS <= +3.3VALW_R <= 40mS

RS880:
1, 0 <(+3.3V) - (+1.8v) < 2.1
2, +1.8V ramp before +1.1v
3. +1.1V ramp before VCC_NB

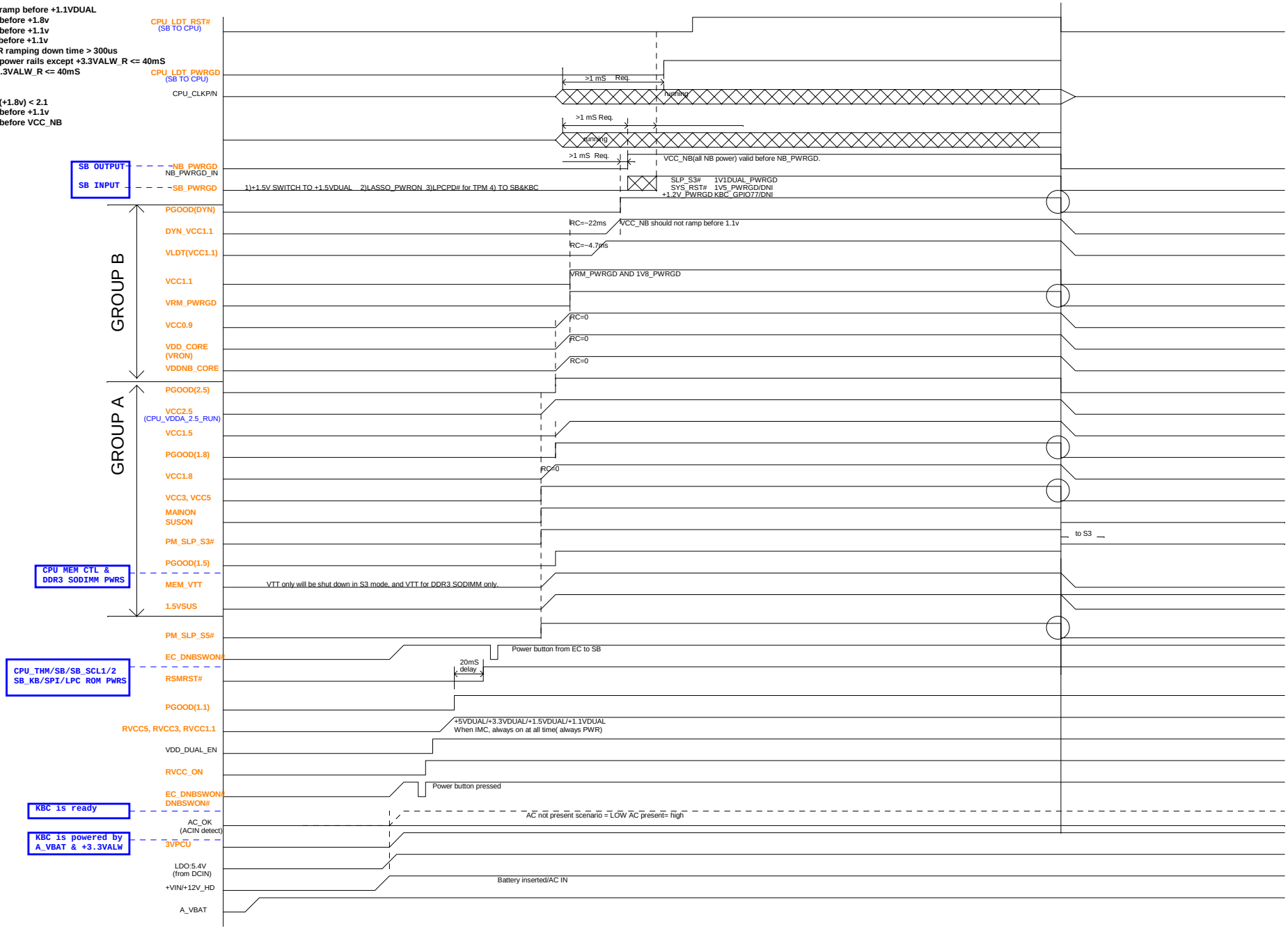

1.Level 1 Environment-related Substances Should NEVER be Used.
2.Purchase ink, paint, wire rods, and Molding resins only from the business Partners that Sony approves as Green Partners.

Quanta Computer Inc.		
PROJECT : NE7		
Size	Document Number: Power Squence	Rev 3A
Date: Monday, March 22, 2010	Sheet 41 of 42	

hexainf@hotmail.com
GRATIS - FREE

2A Adding R159 (10K) for shut down issue.

3A Rename for location(R464, C452)

3A Delete AMD debug connector

3A change R169, R155, R162, R340,
R163, R161, R168, R341, R337 to short pad

3A Delete R332, R249, R181, R333 0ohm

3A change L23, L24, L29, L21, R156,
R171, R167 to short pad

3A Delete R427, R428, R429, R430 0ohm.

3A delete RP36, RP42, RP38,
RP26, RP43, RP41, RP35 0ohm

3A：Delete R358 0ohm

3A：change R247, R305 from 100k to 10Kohm

3A：change R196, R198 from 100k to 10Kohm

3A change R150, L27, L26, L30 to short pad

3A change R172, L42, L28, L25 to short pad

3A change R309, R184, L31, L34, L41 to short pad

3A change L32, L33, L35, R212 to short pad

3A Adding GPIO3、4 for VGA thermal sensor

3A：change L3004, L3019 to short pad

3A change L3006, L3010 to short pad

3A delete L3007, L3012, L3013, R3061 0ohm

3A delete R3049 0ohm

3A change R3112 to short pad

3A delete R3113 0ohm

3A change R252 to short pad.

3A change MR2, MR3, MR8, MR9, MR10, MR11,
MR12, MR13, MR14, MR15, MR16, MR17,
MR18, ML1 to short pad.

3A：adding Q30 for ESD.

3A Change R214 to short pad

3A: delete R277, R294 0ohm

3A: Change L36, L37, L38, L39 to short pad

3A delete R290, R295(colayout) 0ohm, T74(EC side)

3A C541, C542, C543 change from AGND to GND

3A R375 no mount

3A delete LR14 0ohm

3A change LR6 to short pad

3A change R478 to short pad

3A adding R485 PD for mute

Remove short pad: R422,R423

1.Level 1 Environment-related Substances Should NEVER be Used.
2.Purchase ink, paint, wire rods, and Molding resins only from the business Partners that Sony approves as Green Partners.

hexainf@hotmail.com
GRATIS - FREE

Quanta Computer Inc.

PROJECT : NE7

Size	Document Number	Rev
	Change History	3A

Date: Monday, March 22, 2010 Sheet 42 of 42