DRACO Block Diagram

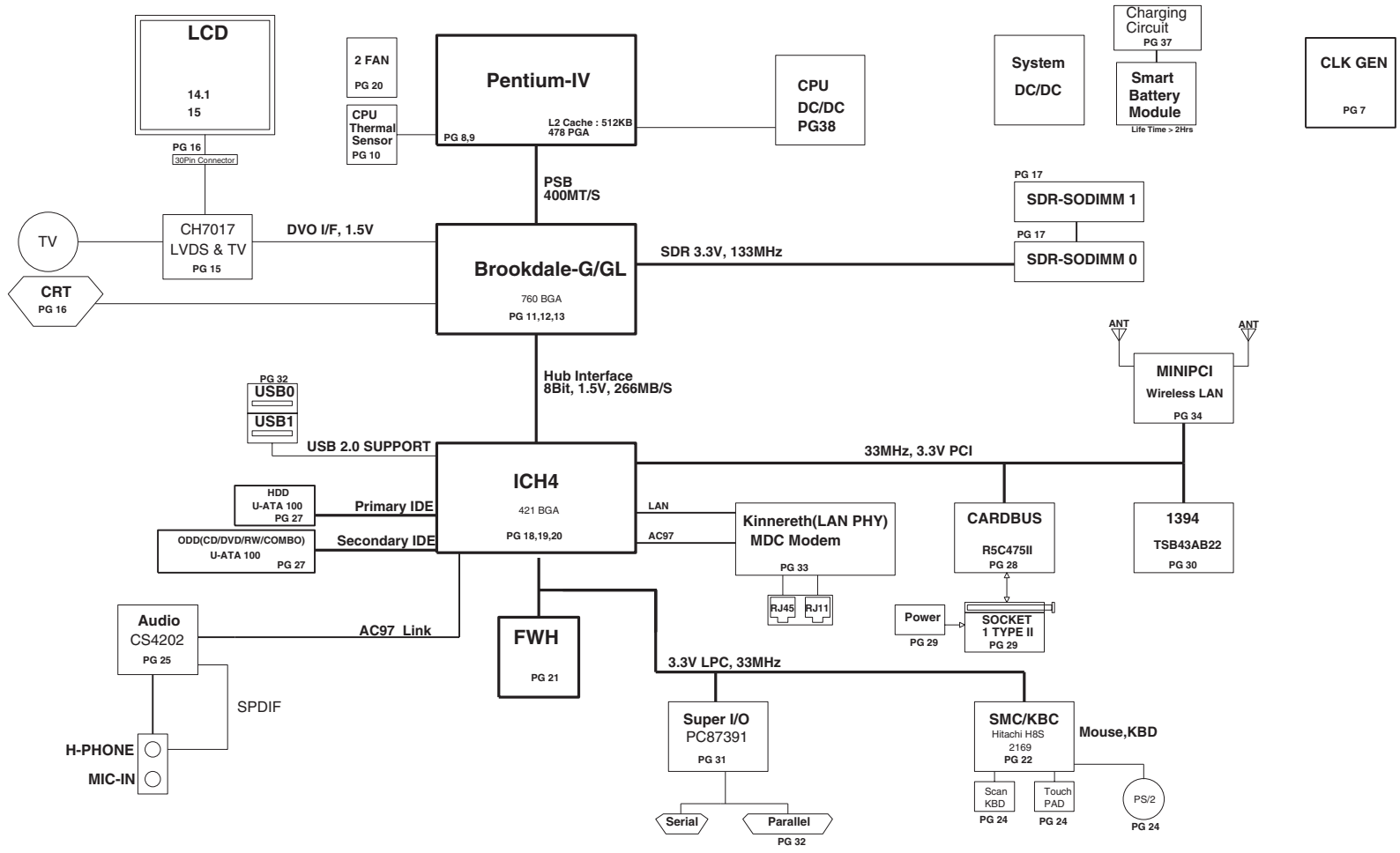

http://laptop-motherboard-schematic.blogspot.com/

Power Diagram

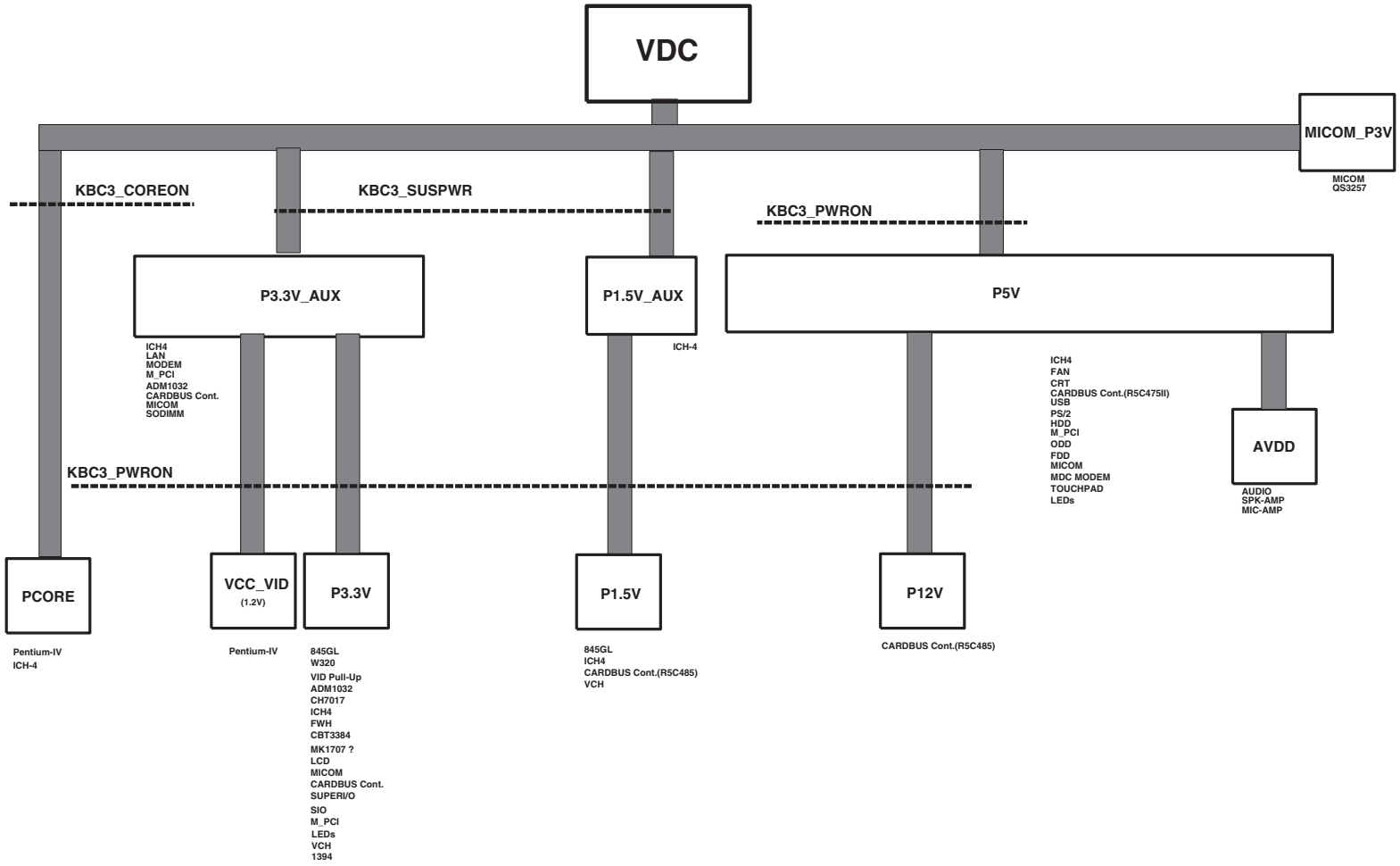

http://laptop-motherboard-schematic.blogspot.com/

CLK Diagram

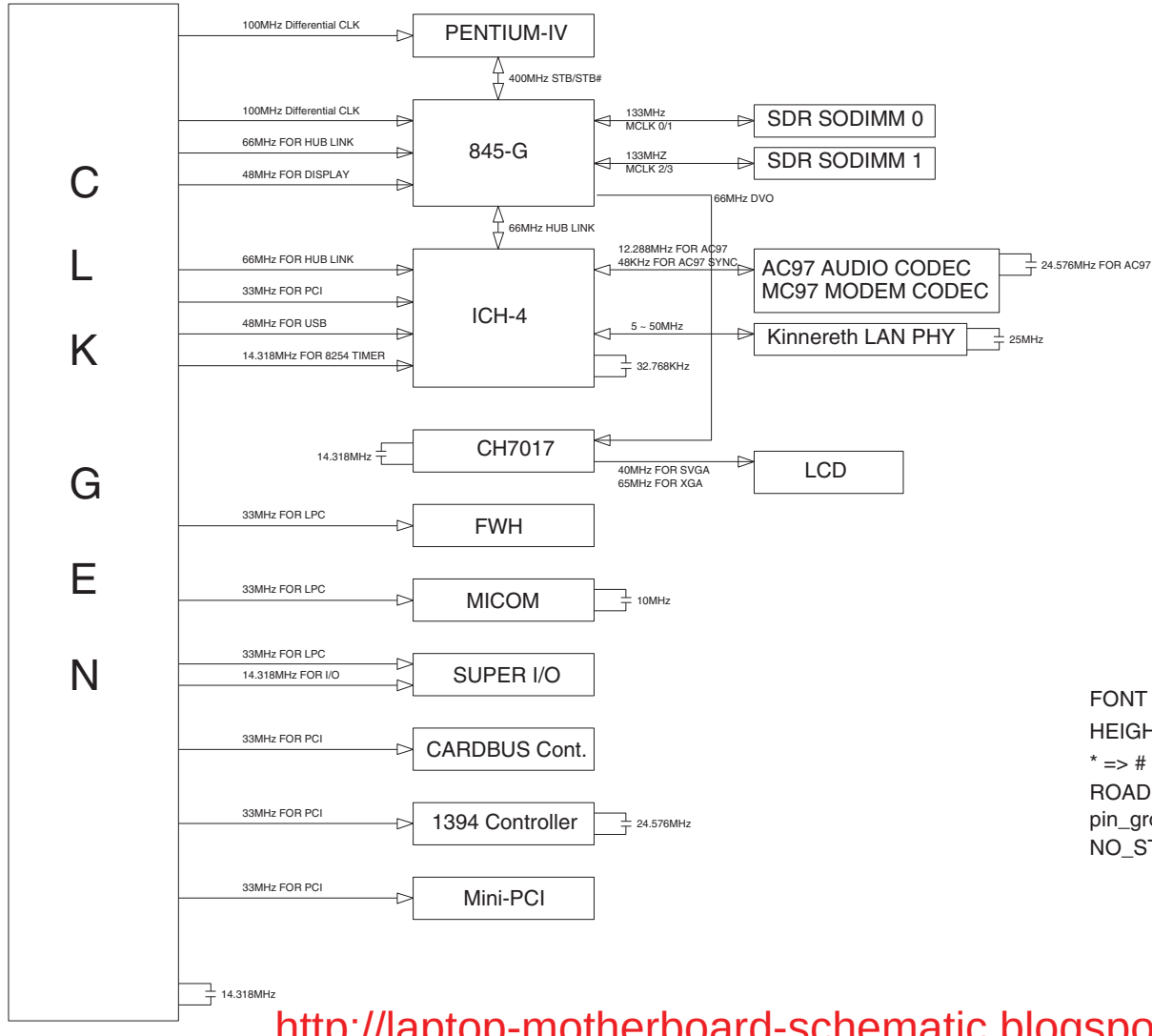

FONT : STROKE => HELVETICA
HEIGHT : 0.2 => 0.25
* => #
ROADMAPPER Height : 0.1 => 0.15
pin_group : change attribute - visibility
NO_STUFF : helvetica bold , 0.25

http://laptop-motherboard-schematic.blogspot.com/

DRACO REFERENCE PLATFORM

SCHEMATIC ANNOTATIONS AND BOARD INFORMATION

PCI Devices

Devices	IDSEL#	REQ/GNT#	Interrupts
Cardbus	AD19	0	A,B
AGP	AD17(internal)	-	A,B
MiniPCI	AD23	2	A,B
Kinnereth	AD24(internal)	-	-
USB	AD29(internal)	-	USB2.0 #0 : A USB2.0 #1 : D
Hub to PCI	AD30(internal)	-	
LPC bridge/IDE/AC97/SMBUS	AD31(internal)	-	B

I²C / SMB Address

Devices	Address	Hex	Bus
ICH4	Master	-	SMBUS Master
ADM1032 (CPU Thermal Sensor)	0100 110x	4Ch	Thermal Sensor
SODIMM0	1010 000x	A0h	SDR SODIMM0
SODIMM1	1010 000x	A2h	SDR SODIMM1
CK-Titan (Clock Generator)	1101 001x	D2h	Clock, Unused Clock Output Disable
LVDS & TV Encoder(CH7017)	1110 101x	EAh	I2C BUS

CPU Core Voltage Table

VID4	VID3	VID2	VID1	VID0	Voltage		VID4	VID3	VID2	VID1	VID0	Voltage
0	1	1	0	0	1.550 V		1	0	1	1	0	1.300 V
0	1	1	0	1	1.525 V		1	0	1	1	1	1.275 V
0	1	1	1	0	1.500 V		1	1	0	0	0	1.250 V
0	1	1	1	1	1.475 V		1	1	0	0	1	1.225 V
1	0	0	0	0	1.450 V		1	1	0	1	0	1.200 V
1	0	0	0	1	1.425 V		1	1	0	1	1	1.175 V
1	0	0	1	0	1.400 V		1	1	1	0	0	1.150 V
1	0	0	1	1	1.375 V	1	1		1	0	1	1.125 V
1	0	1	0	0	1.350 V	1	1	1		1	0	1.100 V
1	0	1	0	1	1.325 V		1	1	1	1	1	VRM output off

USB PORT Assign

PORT NUMBER	ASSIGNED TO
0	SYSTEM A
2	SYSTEM B
1, 3~5	(RESERVED)

REVISION HISTORY

See rev notes in the changes file for more information.

http://laptop-motherboard-schematic.blogspot.com/

RESET DIAGRAM

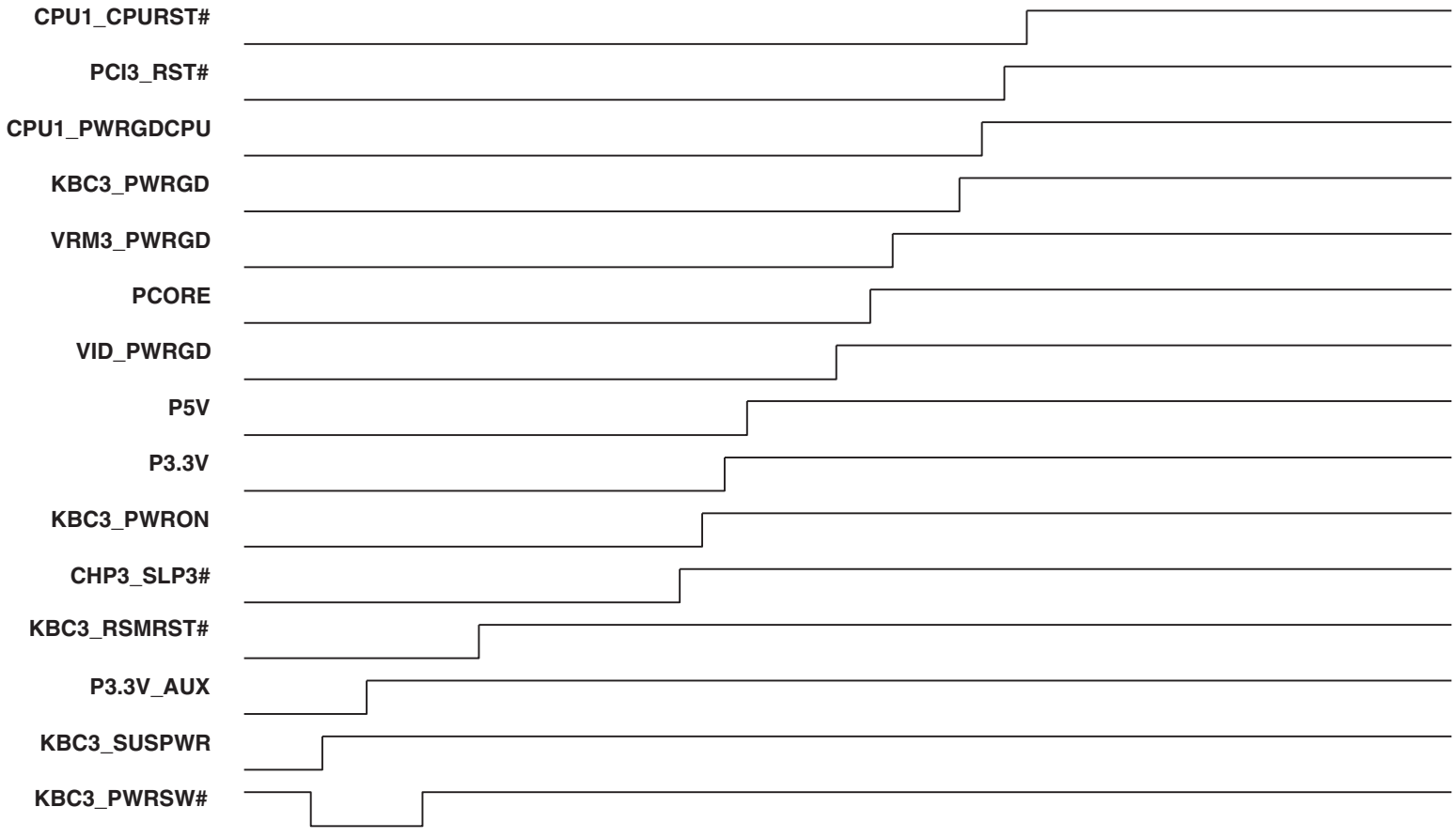

http://laptop-motherboard-schematic.blogspot.com/

Clock Generator

S1	S0	HOST CLK
0	0	66MHz
0	1	100MHz @
1	0	200MHz
1	1	133MHz future use

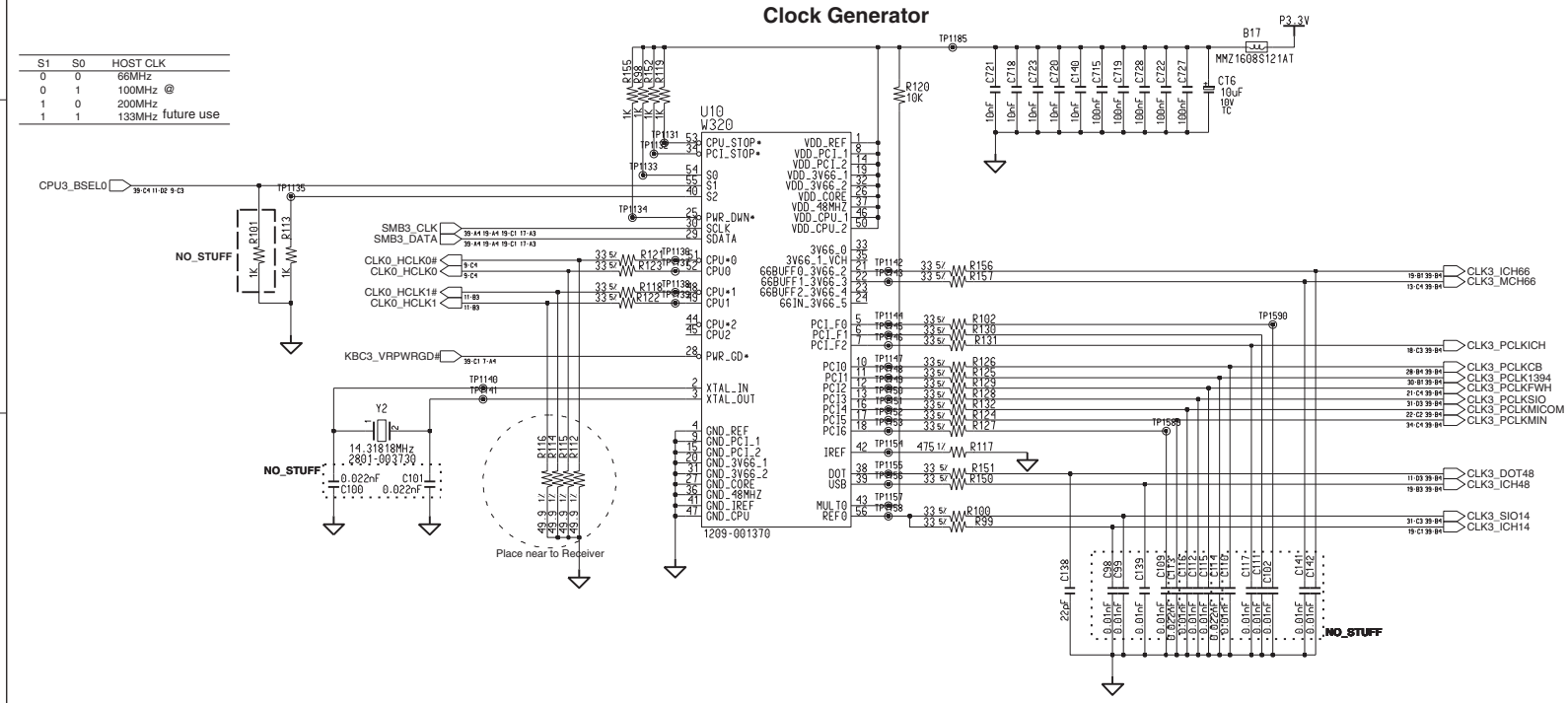

http://laptop-motherboard-schematic.blogspot.com/

Northwood Processor

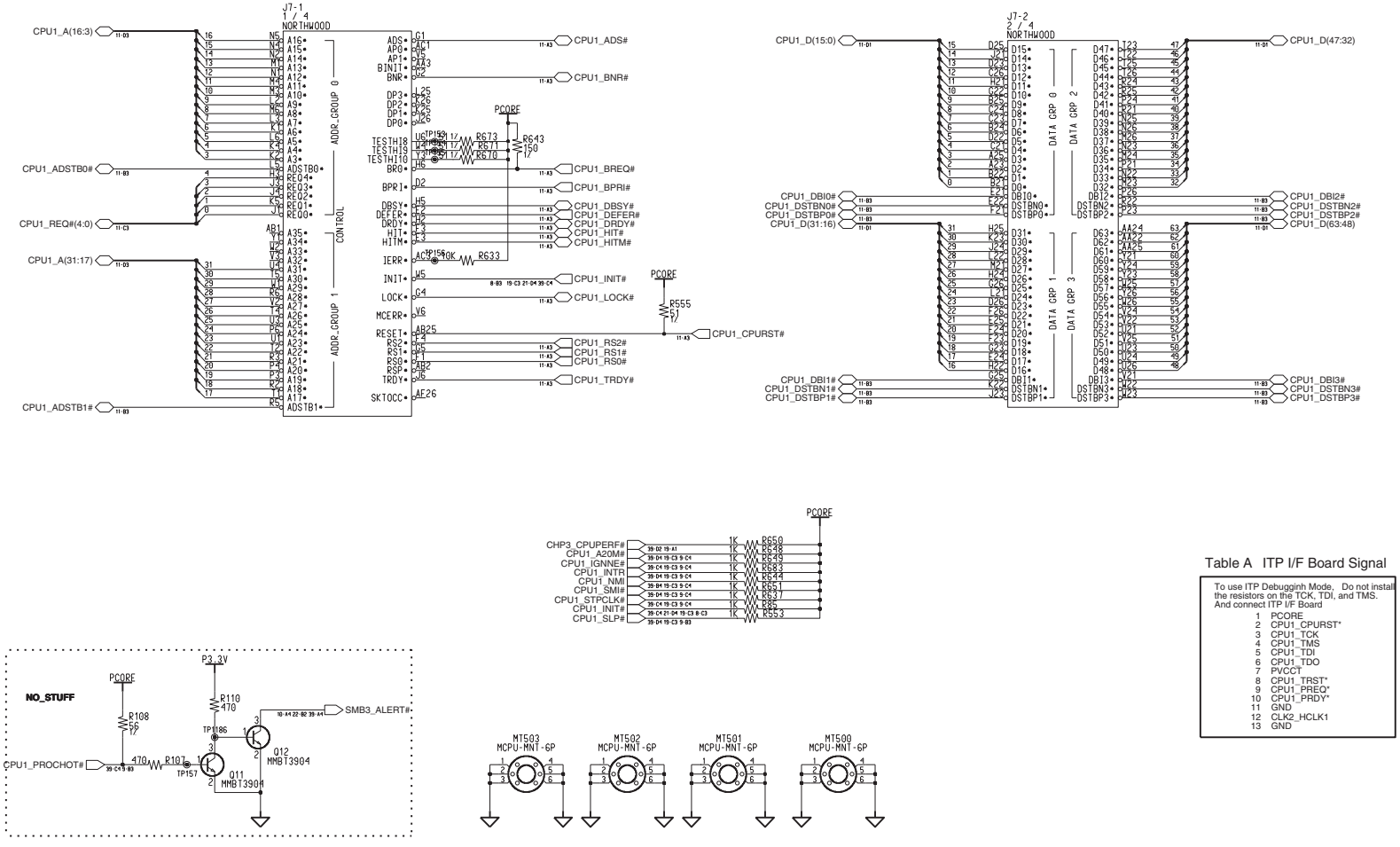

Table A ITP I/F Board Signal

To use ITP Debugginh Mode, Do not install the resistors on the TCK, TDI, and TMS. And connect ITP I/F Board

1	PCORE
2	CPU1_CPURST*
3	CPU1_TCK
4	CPU1_TMS
5	CPU1_TDI
6	CPU1_TDO
7	PVCCT
8	CPU1_TRST*
9	CPU1_PREQ*
10	CPU1_PRDY*
11	GND
12	CLK2_HCLK1
13	GND

http://laptop-motherboard-schematic.blogspot.com/

Northwood Processor

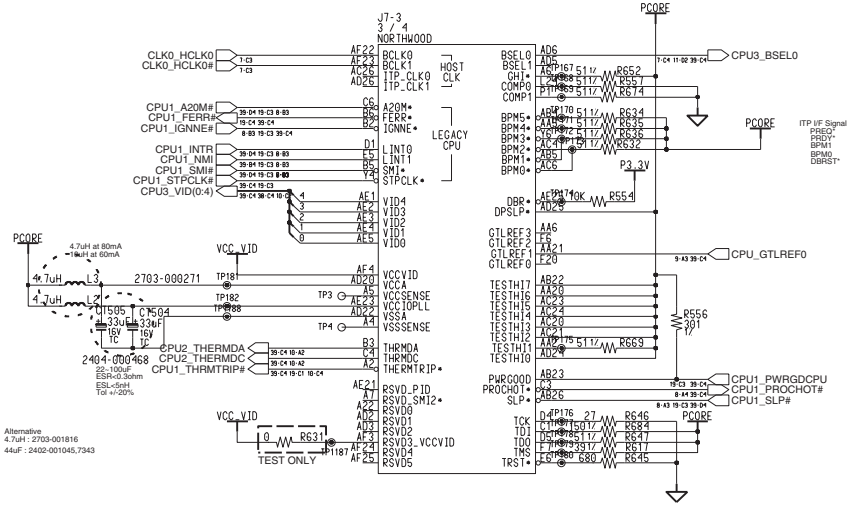

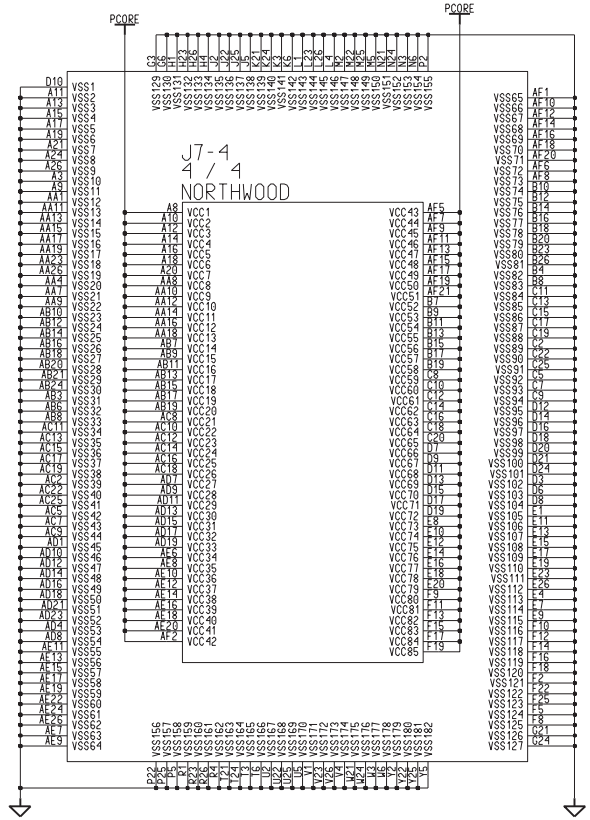

GTL REFERENCE

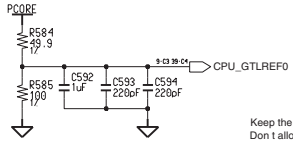

Keep the Voltage divider within 1.5" of the first GTLREF pin.
Don t allow signal line to use the GTLREF routing as part of their return path.

http://laptop-motherboard-schematic.blogspot.com/

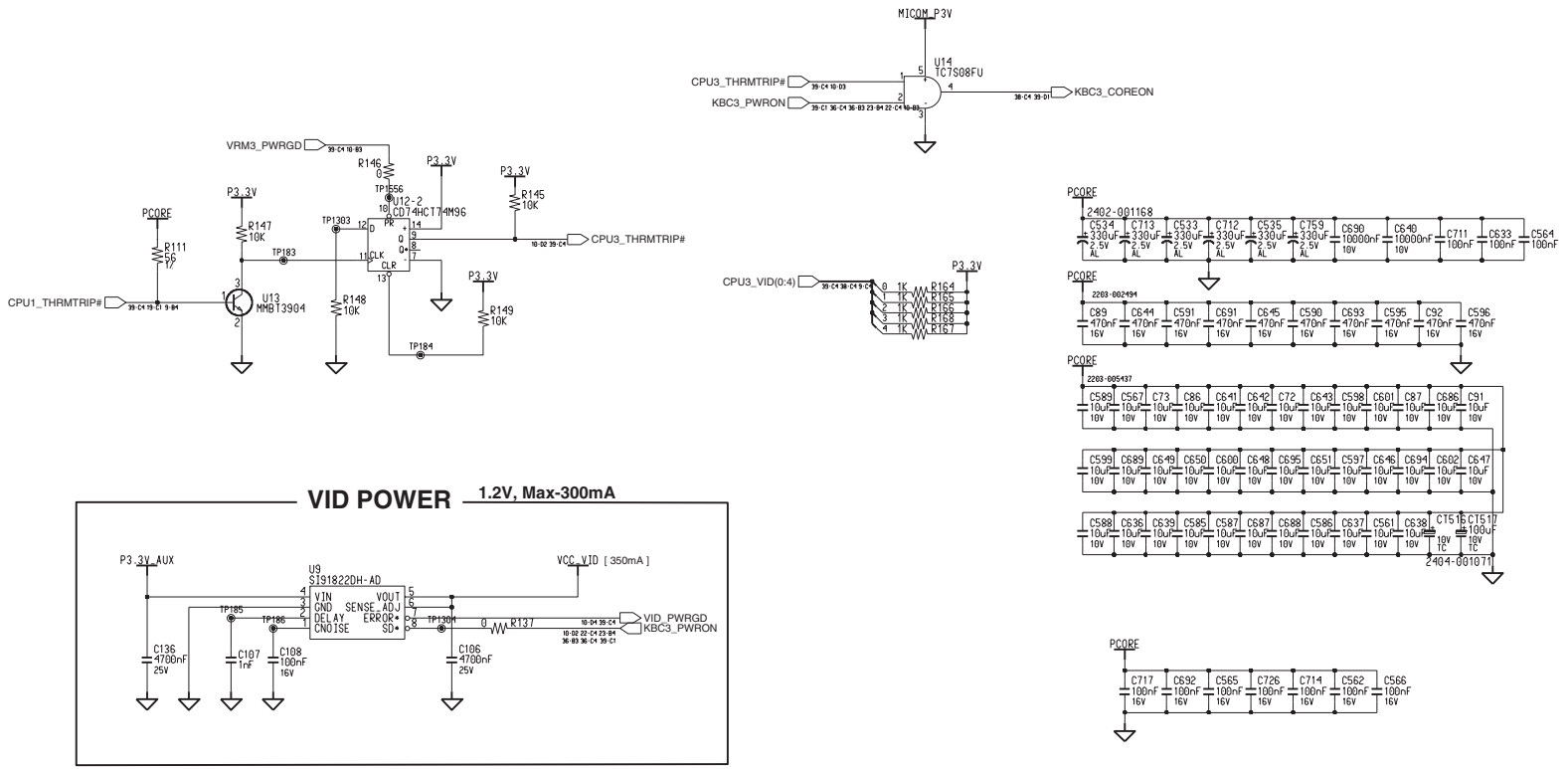

Refer To Thermal Sensor Layout Guidelines.

- Place the Thermal Sensor close to a remote diode.
- Keep traces away from high voltage (+12V bus)
- Keep traces away from fast data buses and CRTs.
- Use recommended trace widths and spacings (10mil)
- Place a ground plane under the traces.
- Use guard traces flanking DXP and DXN and connecting to GND

http://laptop-motherboard-schematic.blogspot.com/

BROOKDALE-GL (1/3)

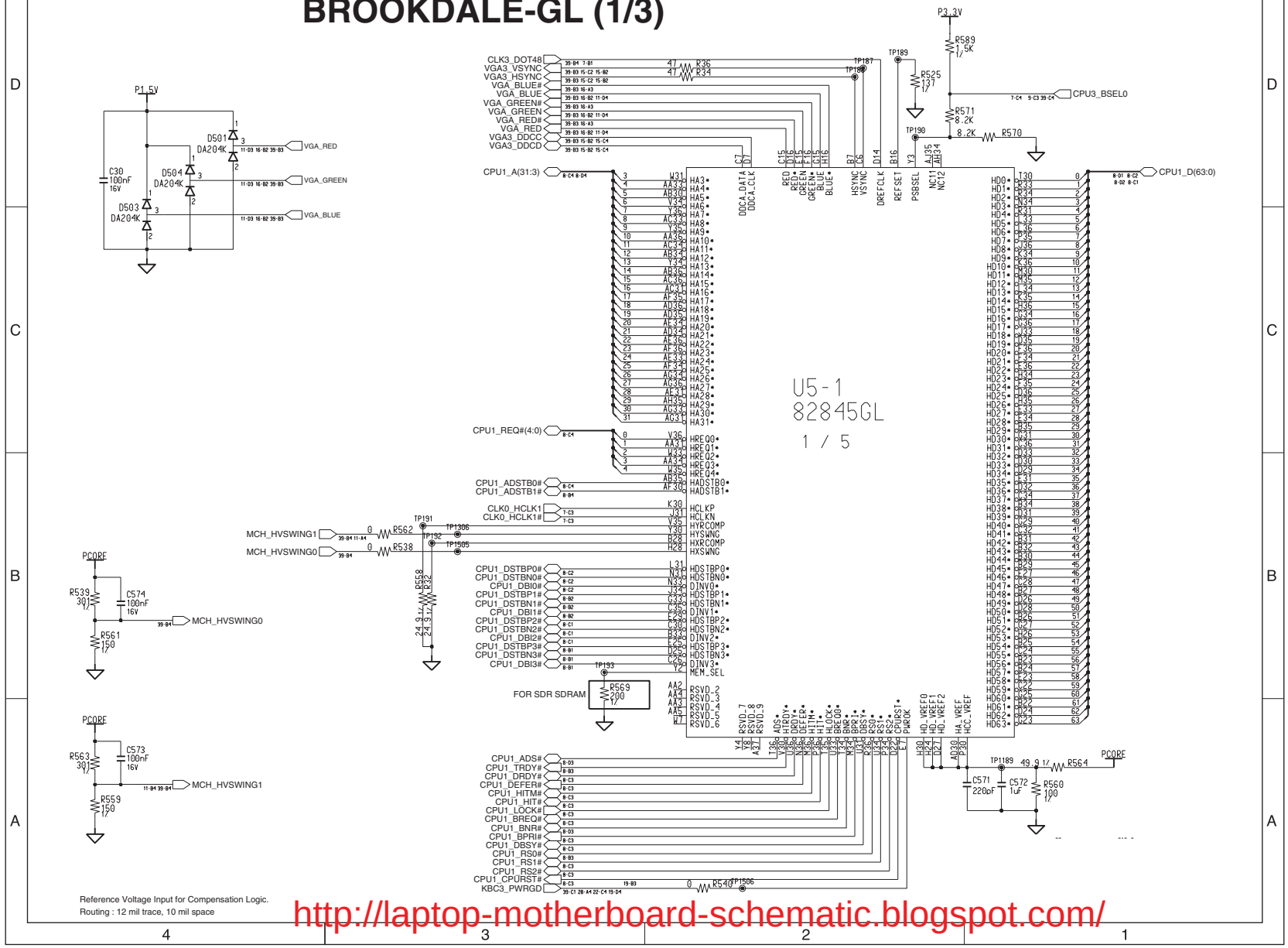

http://laptop-motherboard-schematic.blogspot.com/

BROOKDALE-GL (2/3)

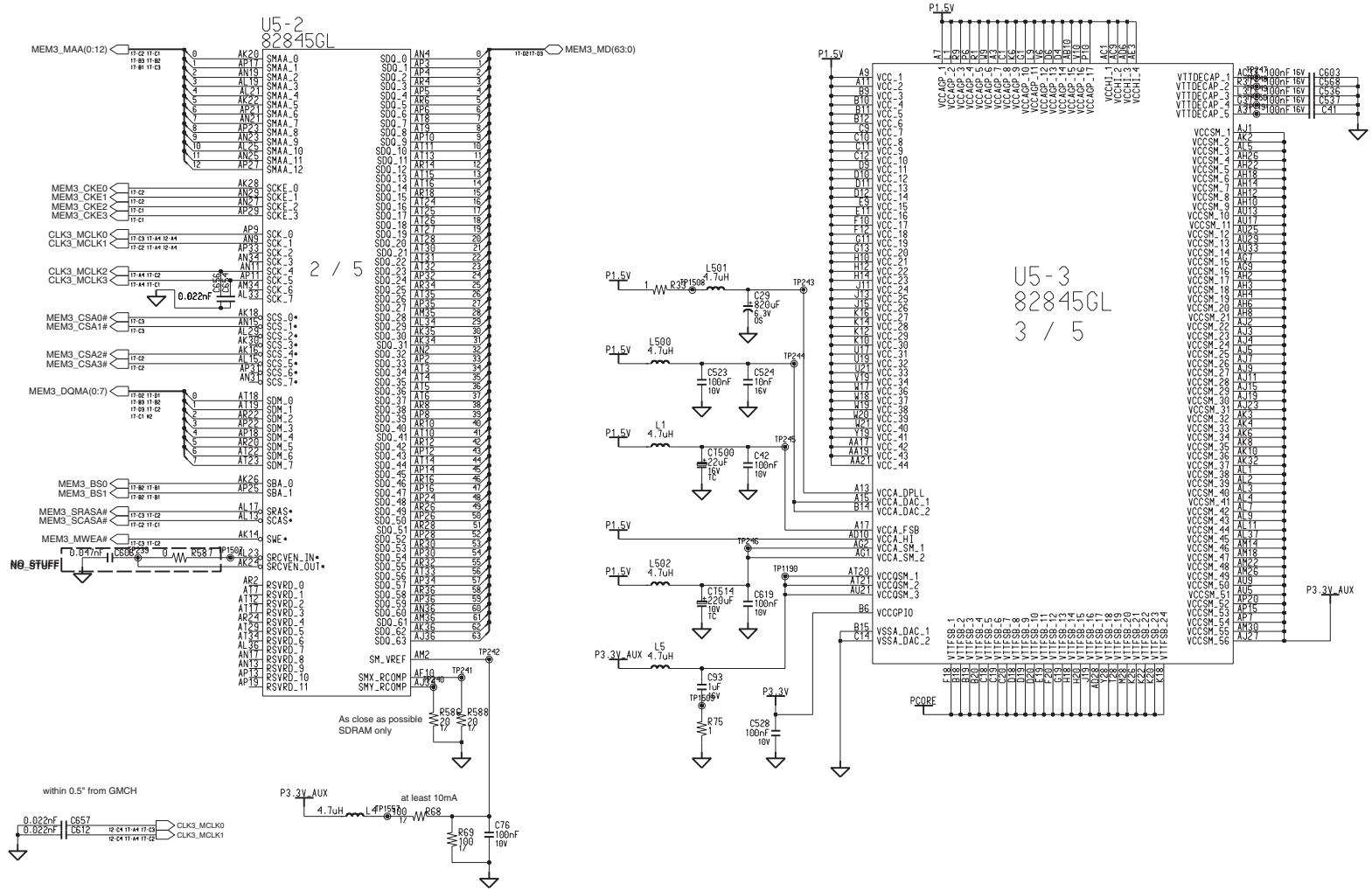

http://laptop-motherboard-schematic.blogspot.com/

BROOKDALE-GL (3/3)

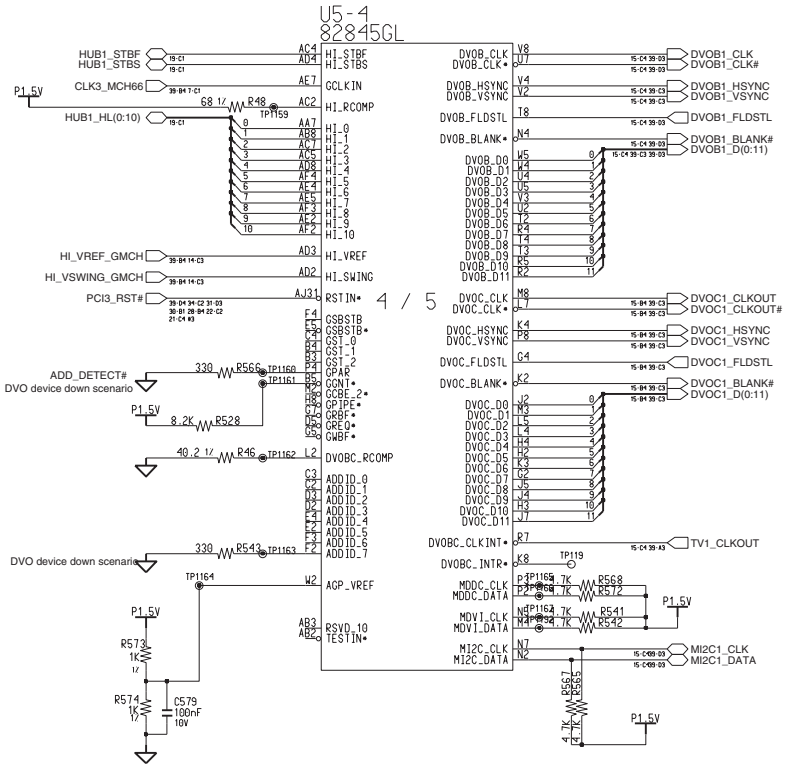

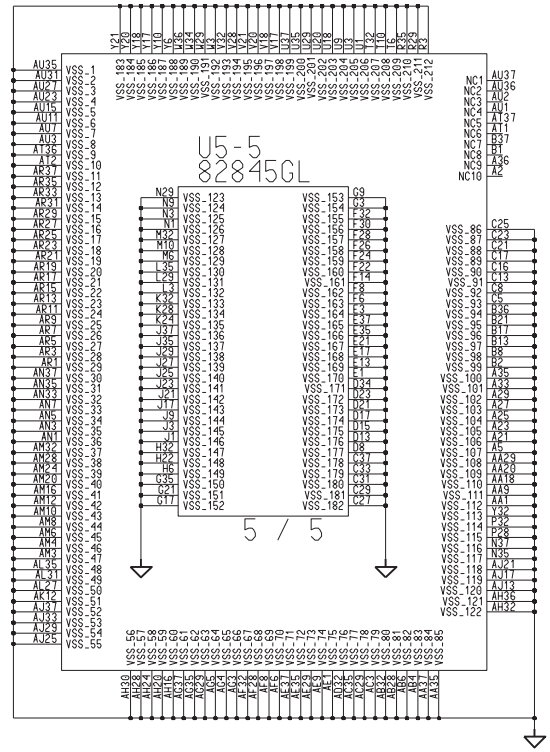

http://laptop-motherboard-schematic.blogspot.com/

GMCH bypass for 845G

Between GMCH and ICH

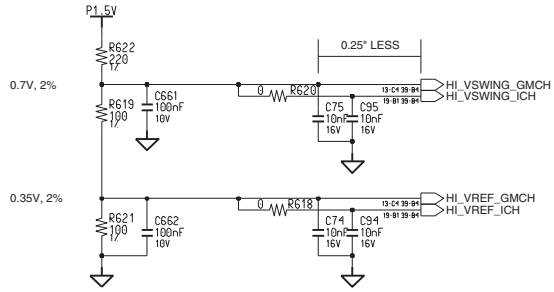

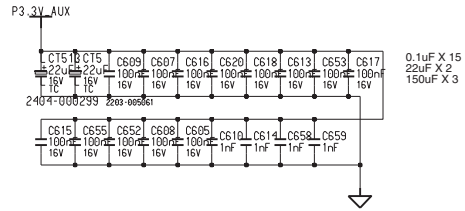

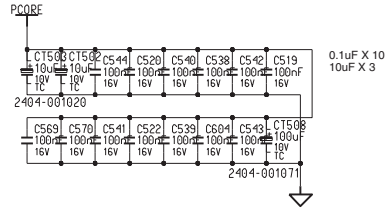

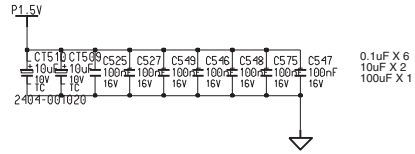

http://laptop-motherboard-schematic.blogspot.com/

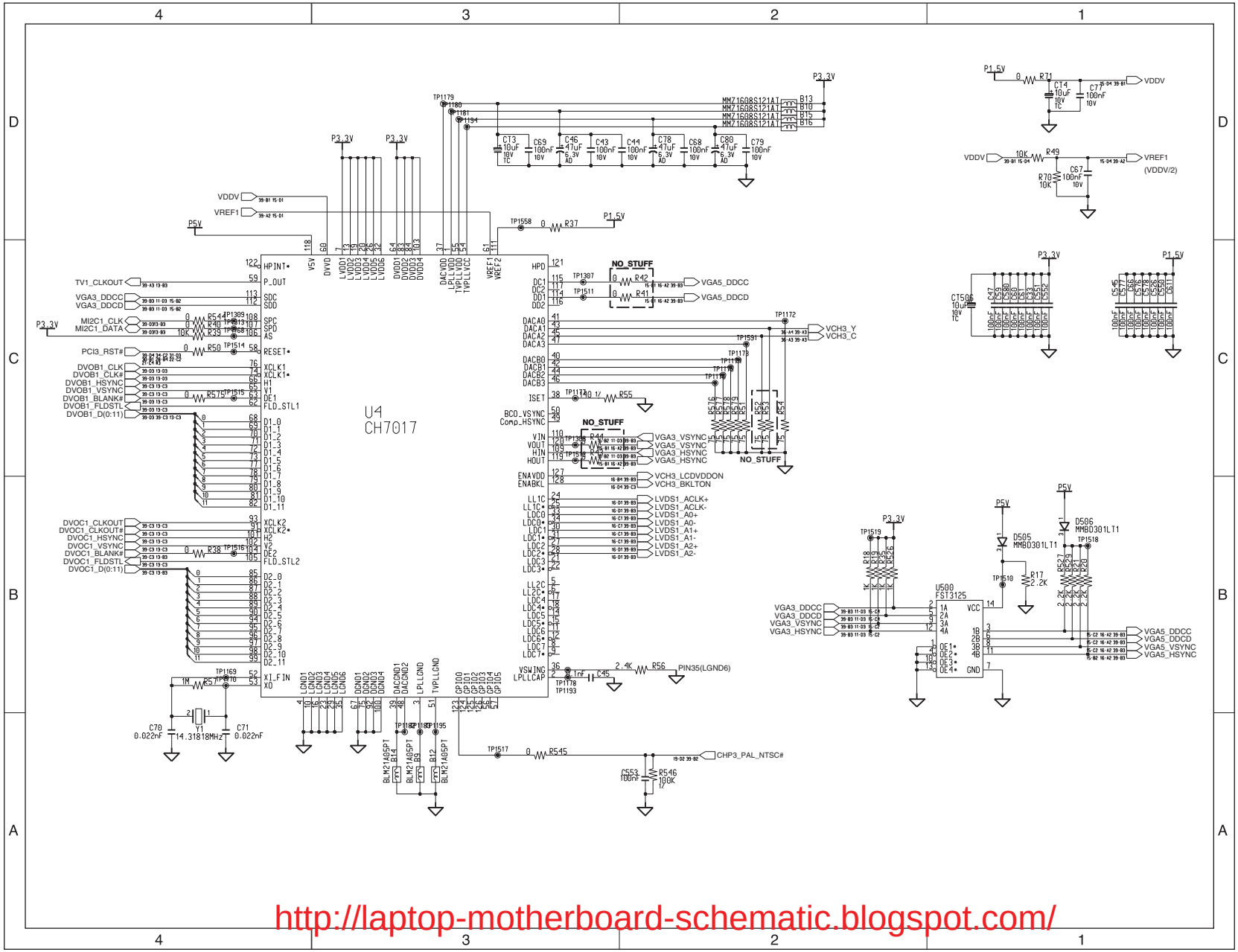

http://laptop-motherboard-schematic.blogspot.com/

Main To LCD Connector

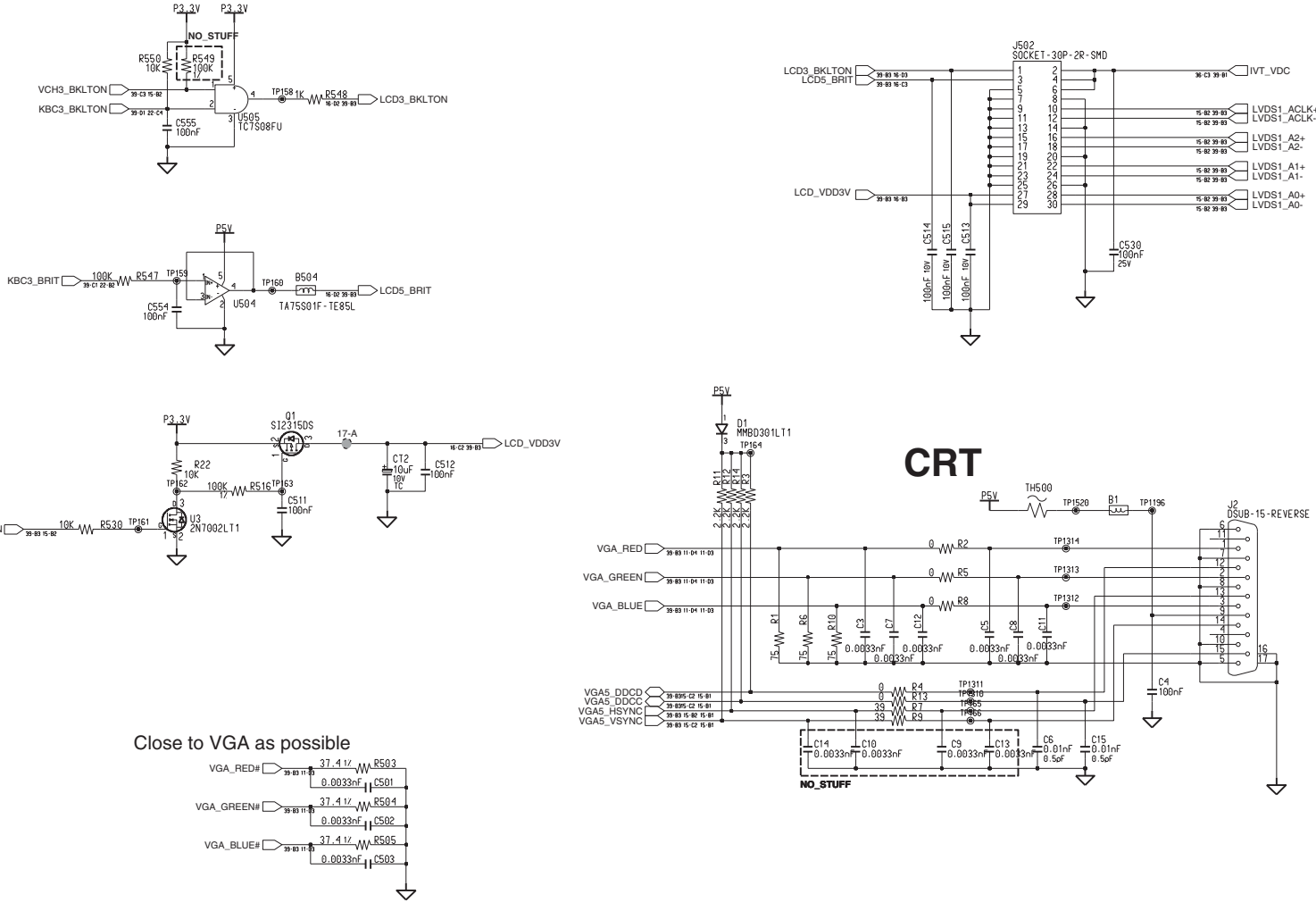

http://laptop-motherboard-schematic.blogspot.com/

SODIMM (Only PC-133)

SLOT 0 REVERSE TYPE

SLOT 1

1G Max

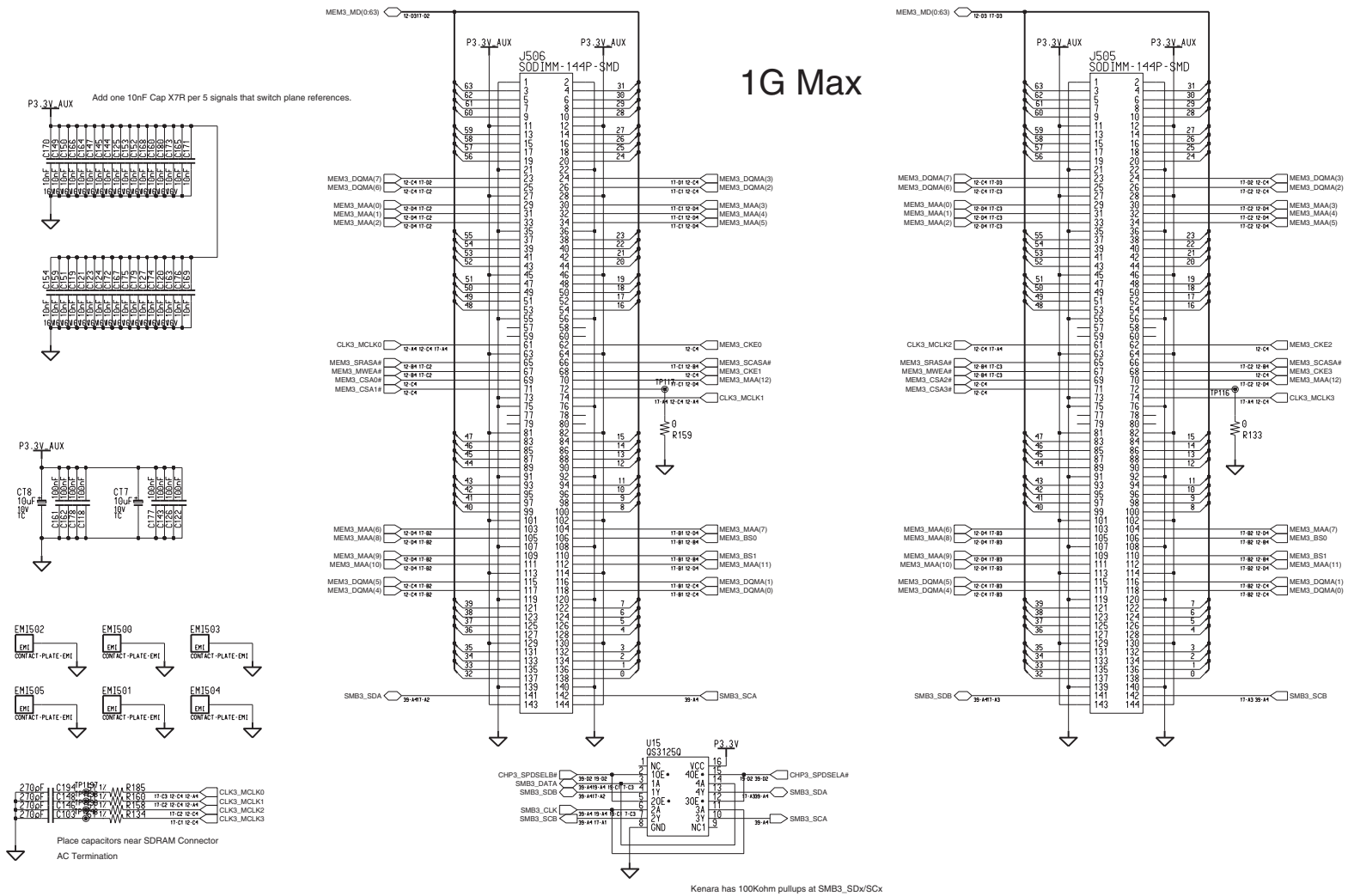

http://laptop-motherboard-schematic.blogspot.com/

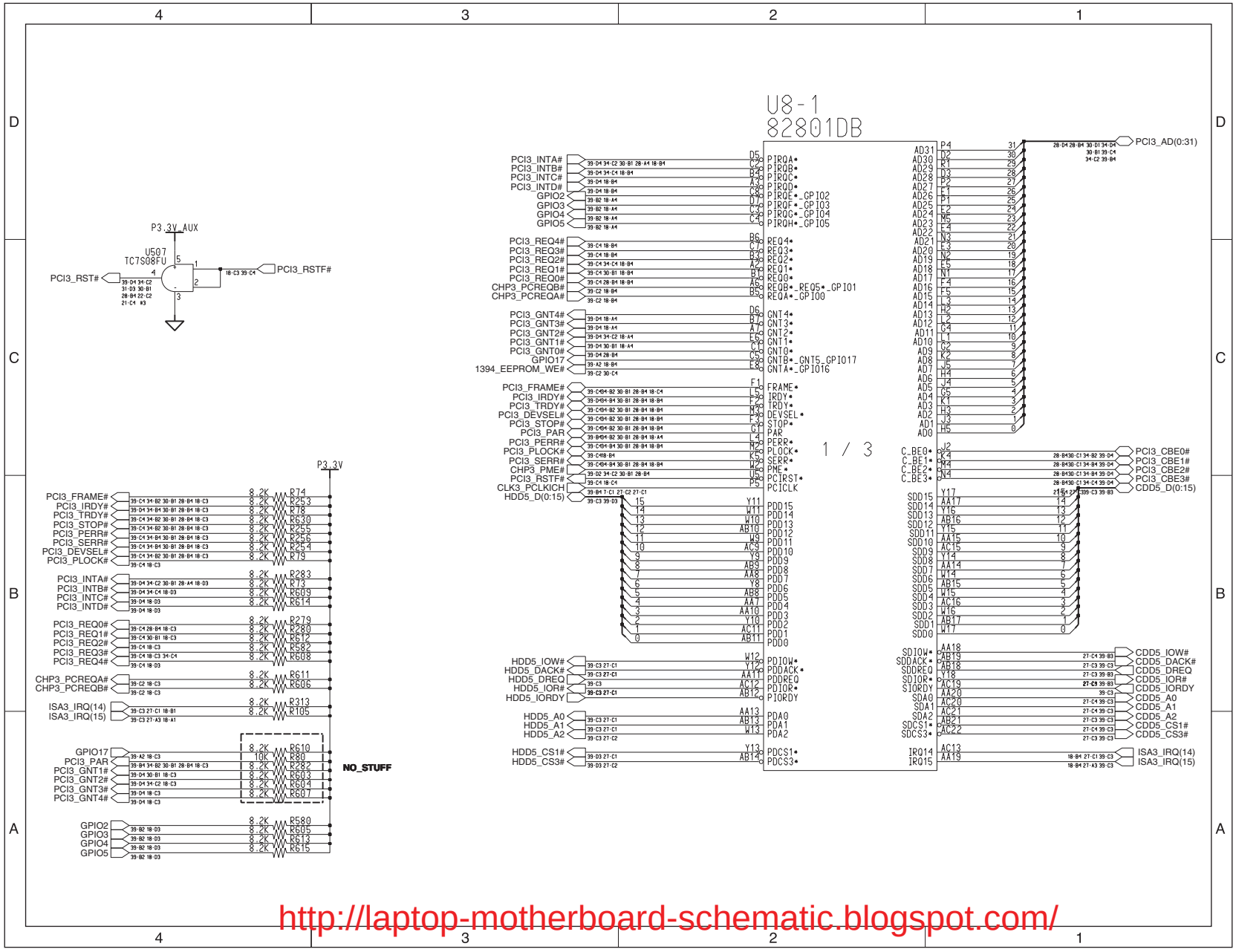
U8-1
82801DB
1 / 3
P3.3V_AUX
U507
TC7S08FU
PCI3_RST#
PCI3_RSTF#
PCI3_AD(0:31)
PCI3_CBE0#
PCI3_CBE1#
PCI3_CBE2#
PCI3_CBE3#
CDD5_D(0:15)
CDD5_IOW#
CDD5_DACK#
CDD5_DREQ
CDD5_IOR#
CDD5_IORDY
CDD5_A0
CDD5_A1
CDD5_A2
CDD5_CS1#
CDD5_CS3#
ISA3_IRQ(14)
ISA3_IRQ(15)
P3.3V
NO_STUFF
http://laptop-motherboard-schematic.blogspot.com/

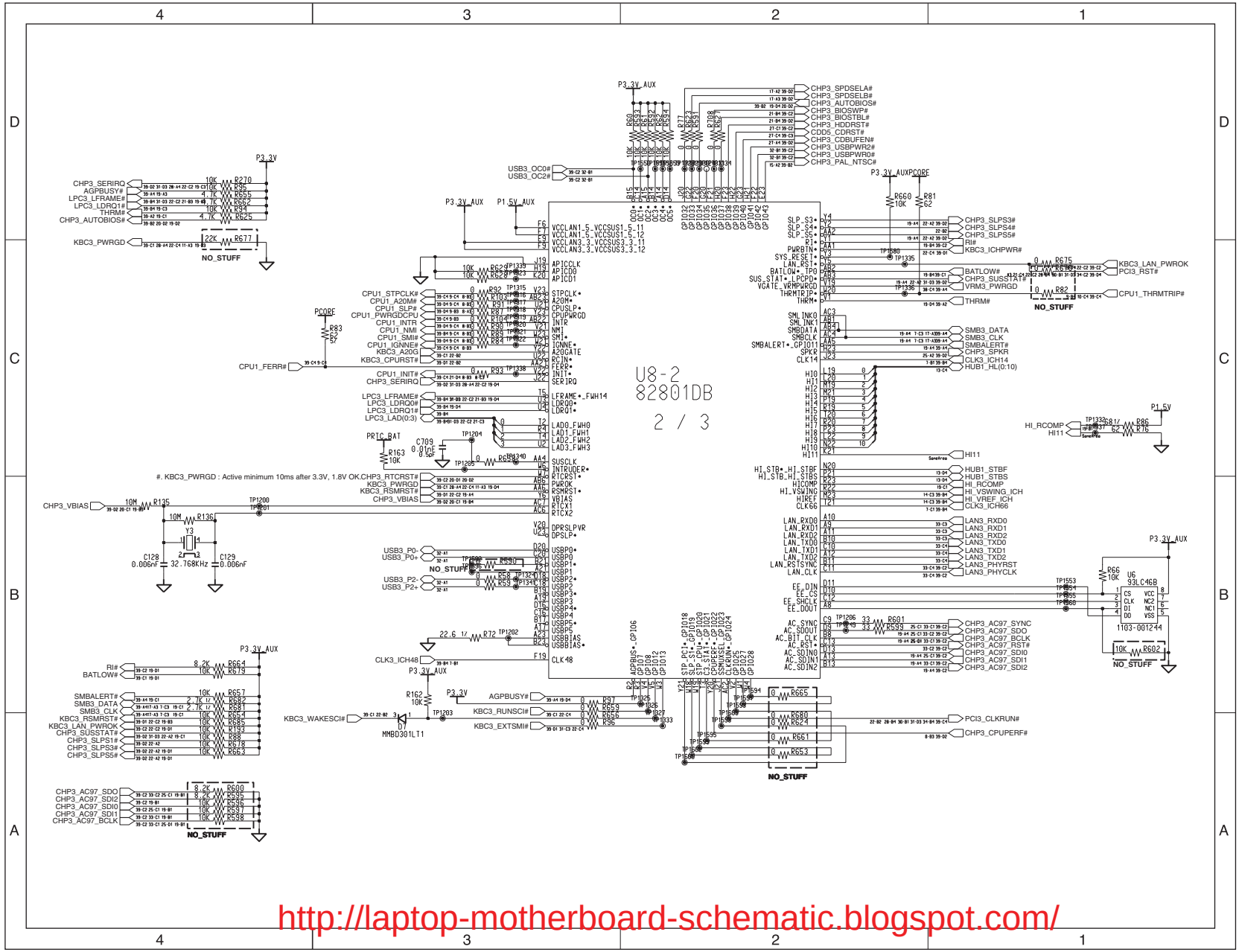

http://laptop-motherboard-schematic.blogspot.com/

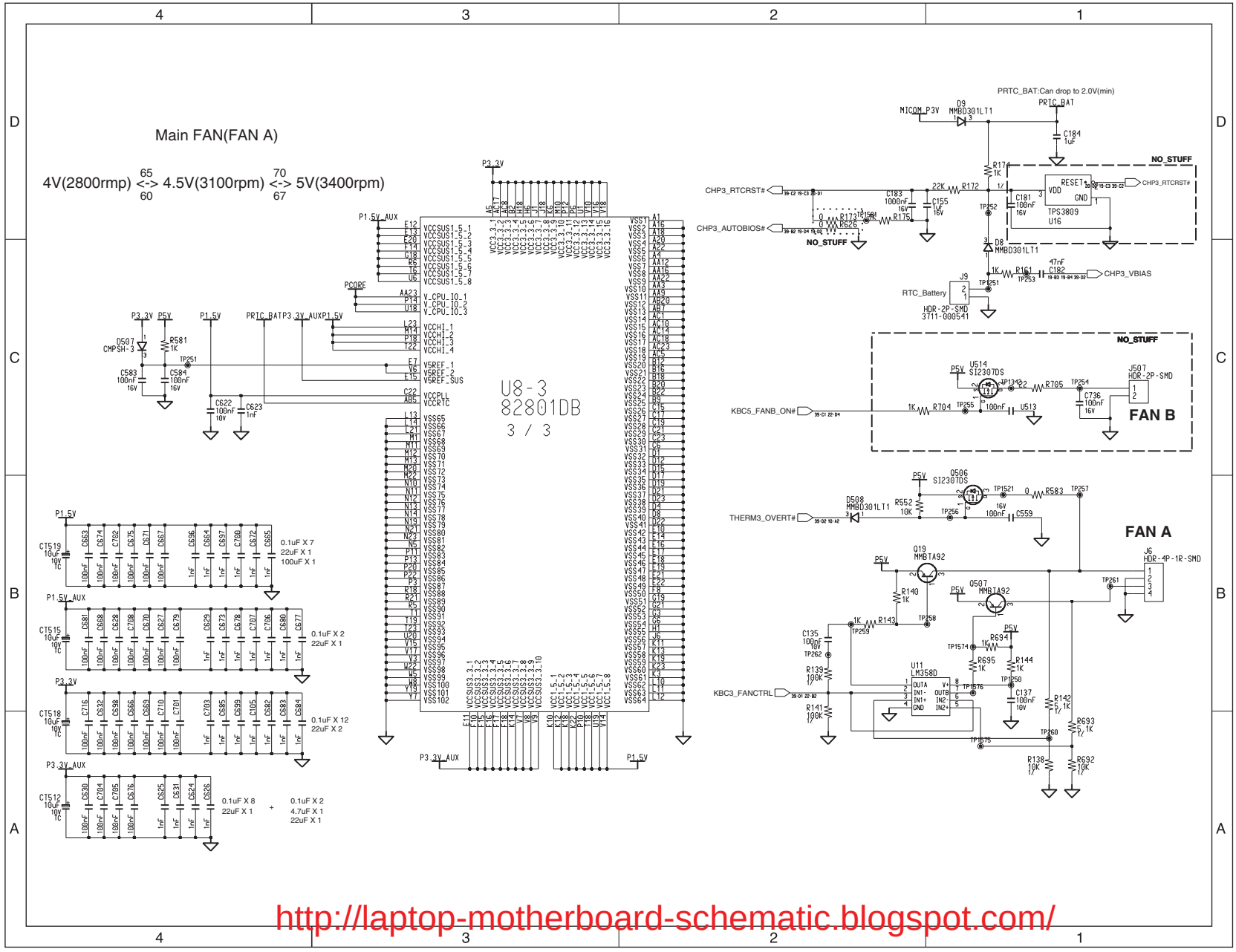

http://laptop-motherboard-schematic.blogspot.com/

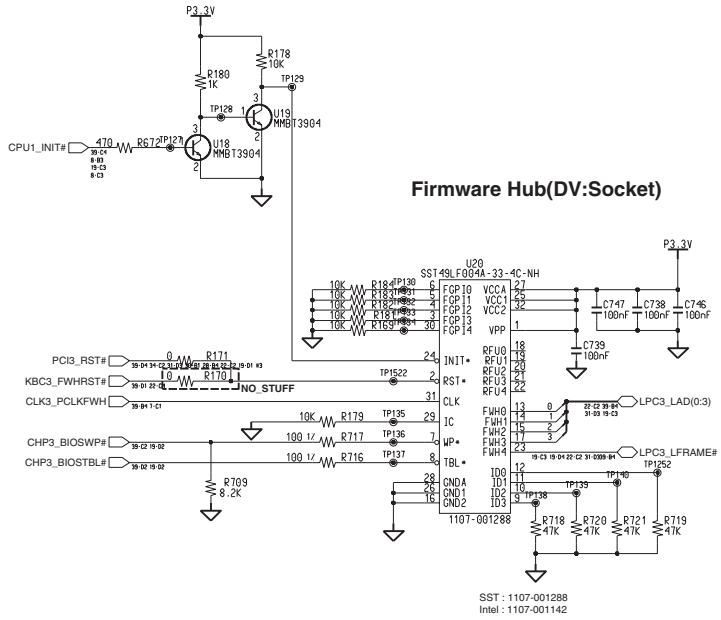

PORT80 DEBUG TABLE

02	VERIFY REAL MODE	66	CONFIGURE ADVANCE CACHE REG.
03	DISABLE NMI	6A	DISPLAY EXTERNAL CACHE SIZE
04	GET CPU TYPE	6C	DISPLAY SHADOW MESSAGE
06	INIT. SYSTEM H/W	6E	DISPLAY NON-DISPOSABLE SEGMENT
08	INIT. CHIPSET REG.	70	DISPLAY ERROR MESSAGE
09	SET IN POST FLAG	72	CHECK FOR CONFIGURATION ERROR
0A	INIT CPU.REG	74	TEST REAL-TIME CLOCK
0B	CPU CACHE ON	76	CHECK FOR KEYBOARD EERROR
0C	INIT.CACHE TO POST	7C	SETUP HARDWARE INTERRUPT VECTOR
0E	INIT. I/O VALUE	7E	TEST COPROCESSER IF PRESENT
0F	ENABLE THE L-BUS IDE	80	DISABLE ON-BOARD I/O PORT
10	INIT. POWER MANAGER	82	DETECT AND INSTALL EXT.RS232C
11	LOAD ALTERNATE REG.	84	DETECT AND INSTALL EXT.PARALLEL
13	PCI BUS MASTER RESET WITH INITIAL POST VALUE	86	RE-INIT. ON-BOARD I/O PORT
		88	INIT. BIOS DATA ROM
14	INIT. KEYBOARD CONTROLLER	8A	INIT.EXTENDED BIOS DATA AREA
16	CHECK CHECKSUM	8C	INIT. FDD CONTROLLER
18	8254 TIMER INIT.	9A	SHADOW OPTION ROMS
1A	8237 DMA CONTROLLER INIT.	9C	SETUP POWER MANAGEMENT
1C	RESET INTERRUP CONTROLLER	9E	ENABLE H/W INTERRUPT
20	TEST DRAM REFRESH	A0	SET TIME OF DAY
22	TEST 8742 KEYBOARD CONTROLLER	A4	INIT. TYPEMATIC RATE
24	SET ES SEGMENT REG. TO 4GB	A8	ERASE F2 PROMPT
26	ENABLE A20	AA	SCAN FOR F2 KEY STROKE
28	AUTO SIZING DRAM	AC	ENTER SETUP
32	COMPUTE THE CPU SPEED	AE	CLEAR IN POST FLAG
34	TESET CMOS RAM	B0	CHECK FOR ERRORS
38	SHADOW SYSTEM BIOS ROM	B2	POST DONE-PREPARE TO BOOT O/S
3A	AUTO SIZING CACHE	B4	ONE BEEP
3C	CONFIGURE ADVANCED CHIPSET REG.	B6	CHECK PASSWORD (OPTION)
3D	LOAD ALTER REG. WITH CMOS VALUE	B7	ACPI INIT
42	INIT. INTERRUPT VECTOR	BA	DMI INIT
44	INIT. BIOS INTERRUPT	BE	CLEAR SCREEN
46	CHECK ROM COPYRIGHT NOTICE	C0	TRY BOOT WITH INT19
47	INIT. I20 SUPPORT IF INSTALLED	D0	INTERRUPT HANDLER ERROR
48	CHECK VIDEO CONFIGURE AGAINST CMOS	D2	UNKNOWN INTERRUPT ERROR
49	INIT. PCI BUS AND DEVICE	D4	PENDING INTERRUPT ERROR
4A	INIT. ALL VIDEO BIOS ROM	D6	SHUTDOWN 5
4C	SHADOW VIDEO BIOS ROM	D8	SHUTDOWN ERROR
50	DISPLAY CPU TYPE AND SPEED	DA	EXTENDED BLOCK MOVE
52	TEST KEYBOARD	DC	SHUTDOWN 10
54	SET KEYCLICK IF ENABLED	89	ENABLE NMI
56	ENABLE KEYBOARD	90	INIT. HDD CONTROLLER
58	TEST FOR UNEXPECTED INTERRUPTS	91	INIT. LOCAL BUS HDD CONTROLLER
5A	DISPLAY " PRESS ..... SETUP"	92	JUMP TO USER PATCH 2
5C	TEST RAM GETWEEN 512K AND 640K	94	DISABLE A20 ADDRESS LINE
60	TEST EXTENDED MEMORY	96	CLEAR HUGE ES SEGMENT REG.
62	TEST EXTENDED MEMORY ADDRESS LINE	98	SEARCH FOR OPTION ROMS
64	JUMP TO USER PATCH 1	2C	NO SMBUS PULL-UPS

http://laptop-motherboard-schematic.blogspot.com/

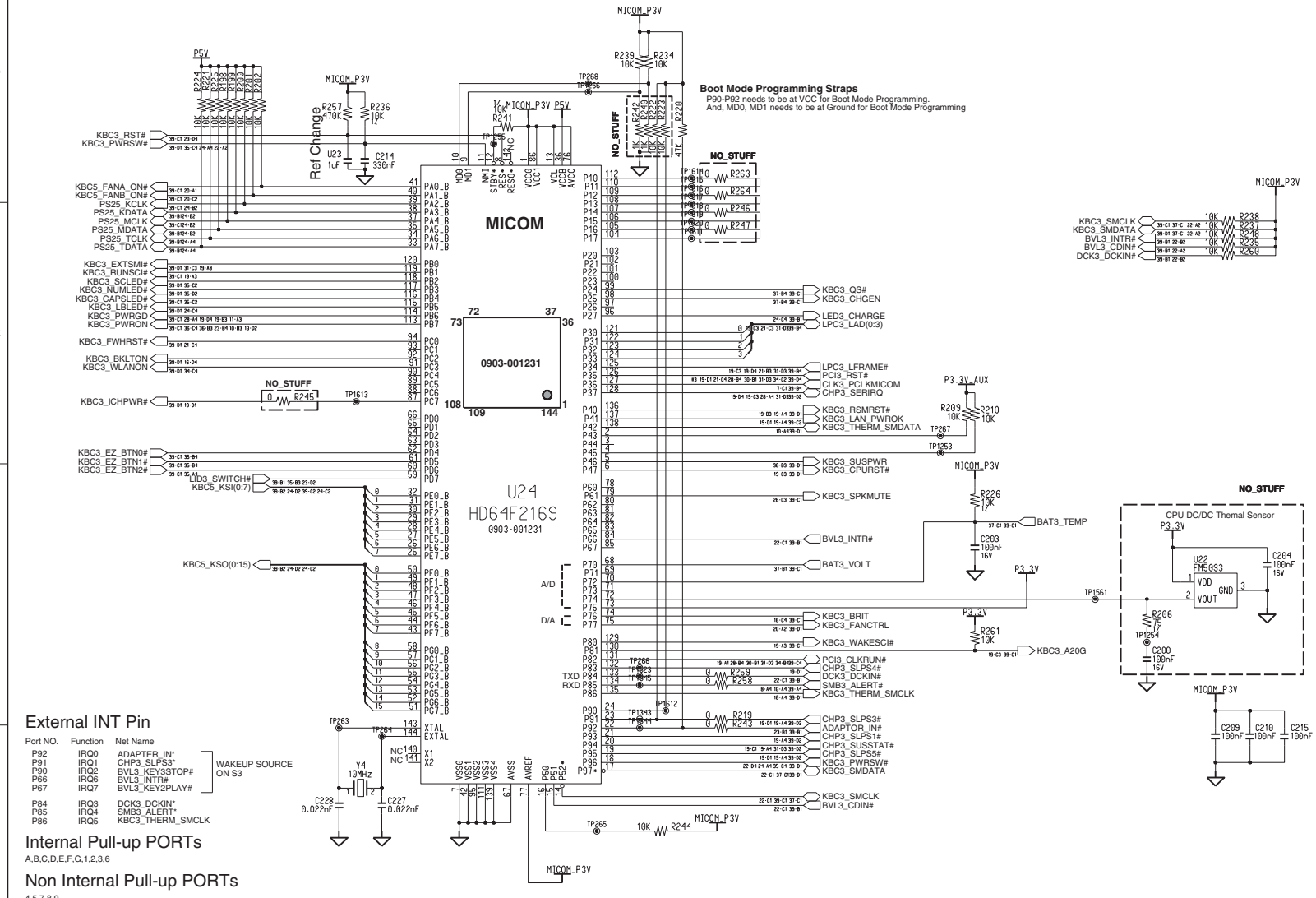

http://laptop-motherboard-schematic.blogspot.com/

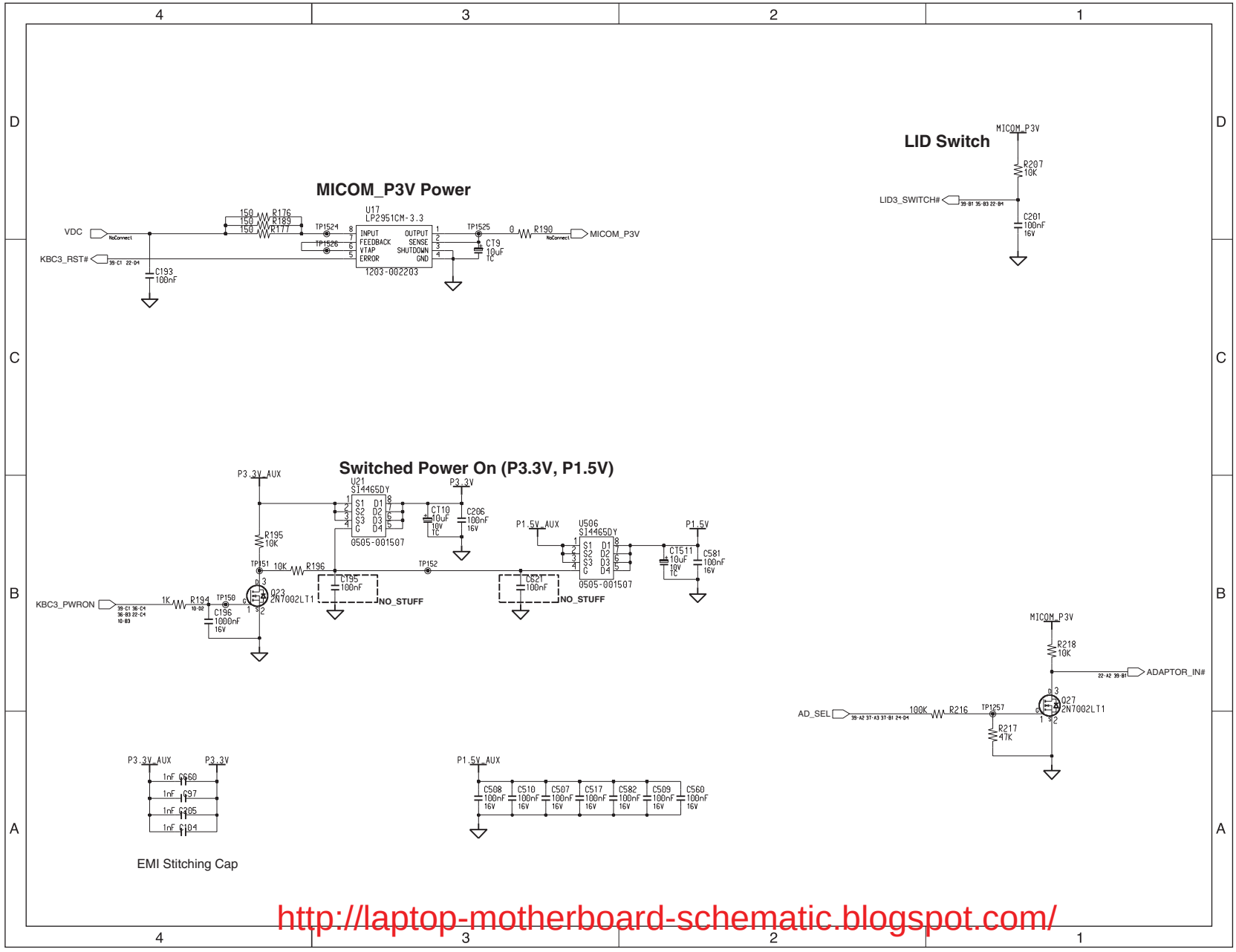

http://laptop-motherboard-schematic.blogspot.com/

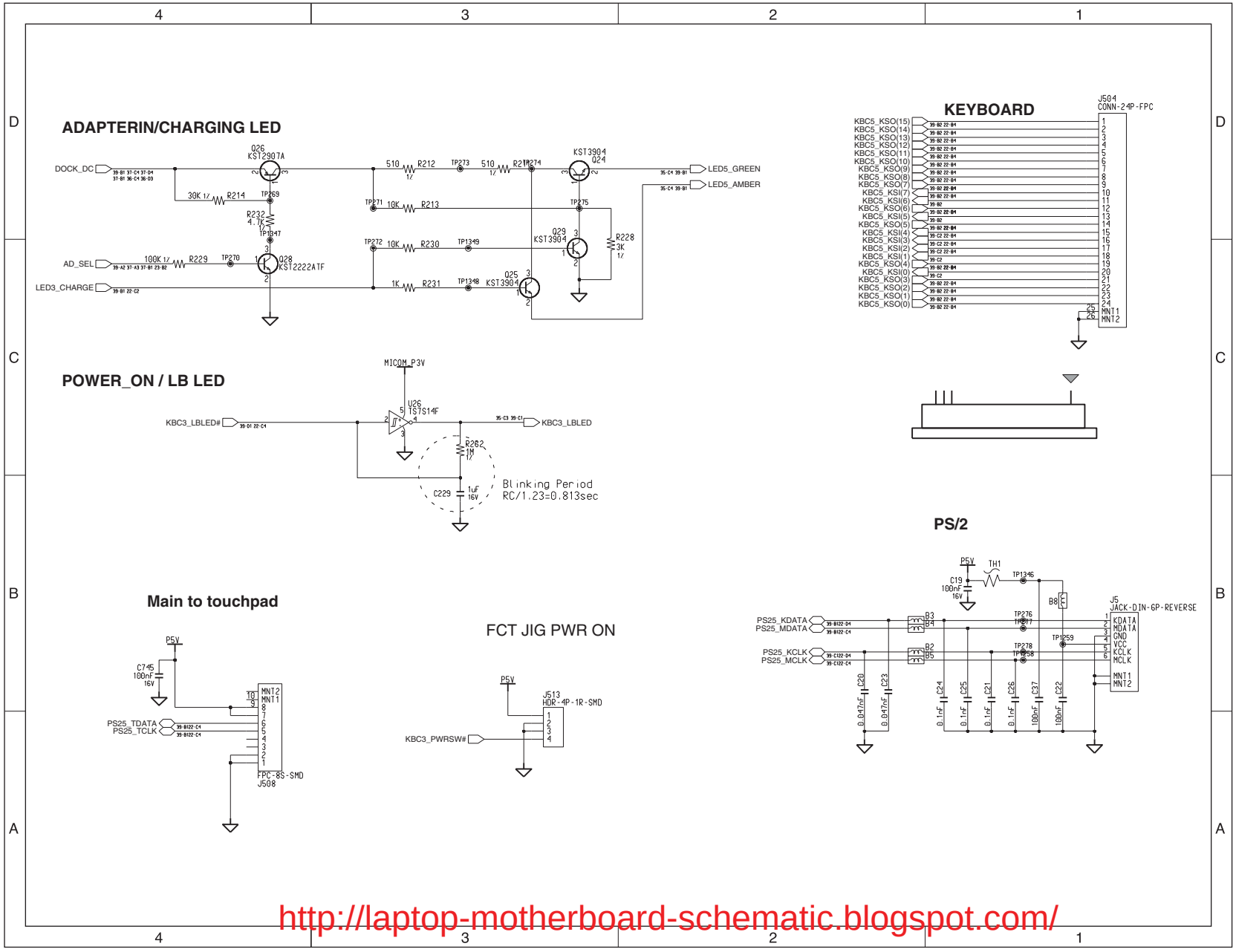

http://laptop-motherboard-schematic.blogspot.com/

AC97 Audio Codec

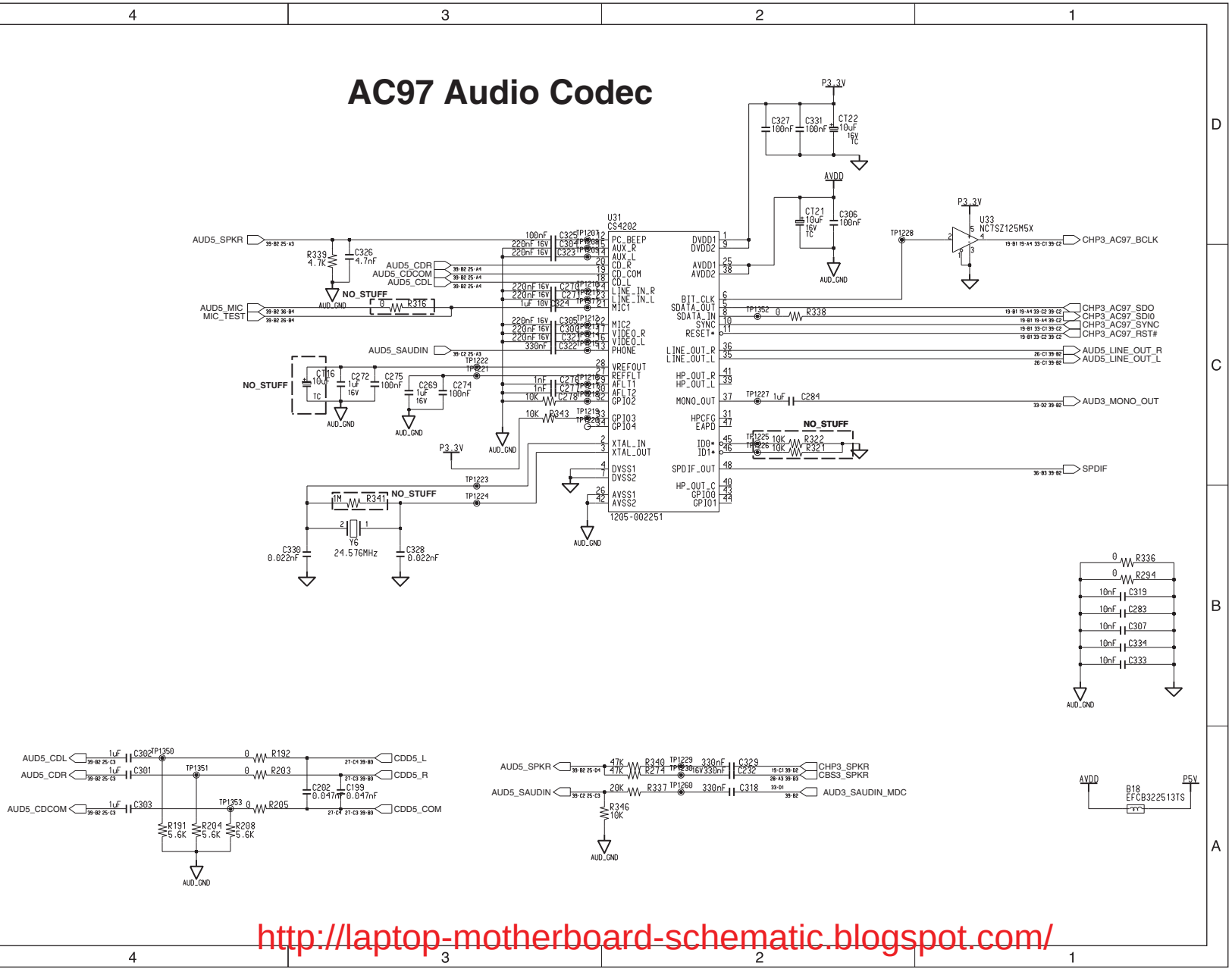

http://laptop-motherboard-schematic.blogspot.com/

Audio AMP

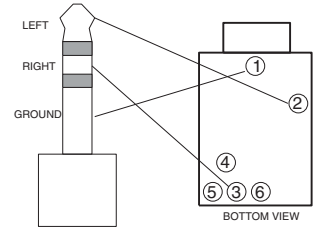

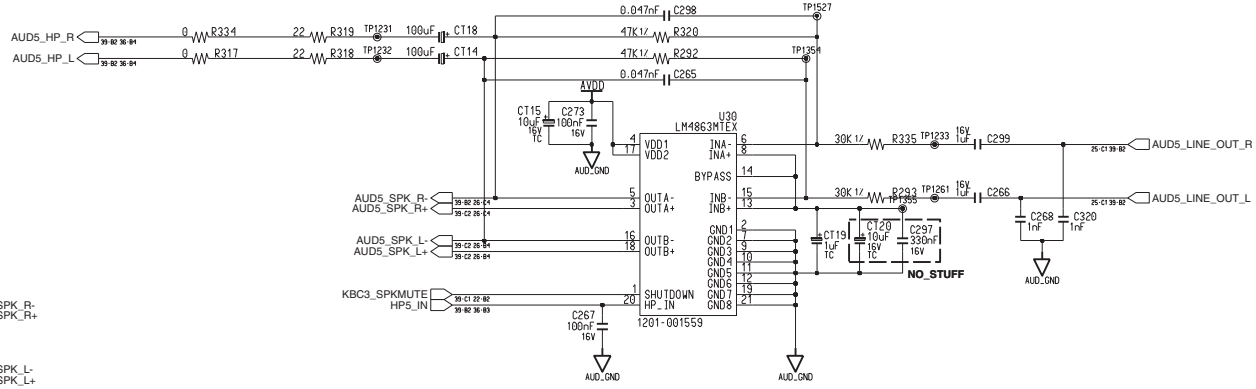

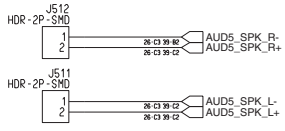

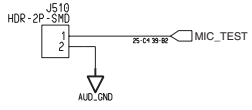

Clost to Codec & AMP

http://laptop-motherboard-schematic.blogspot.com/

CD I/F Conn

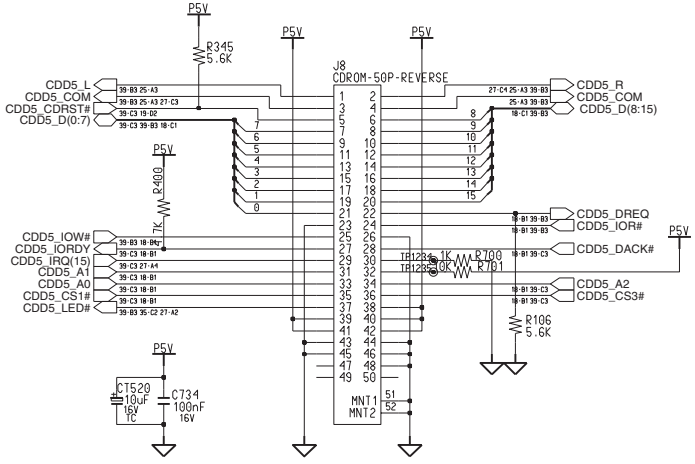

HDD I/F Conn

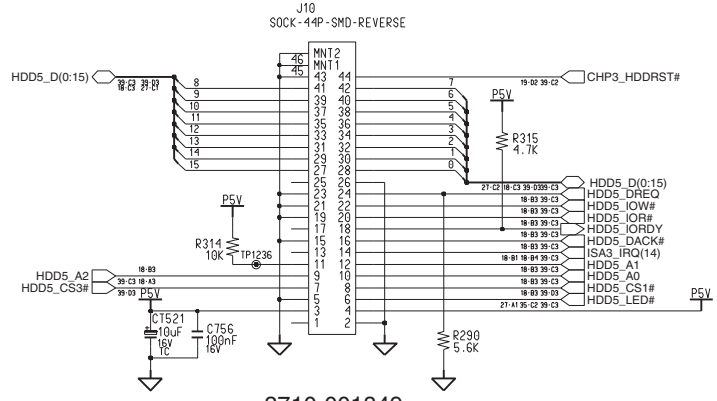

3710-001849

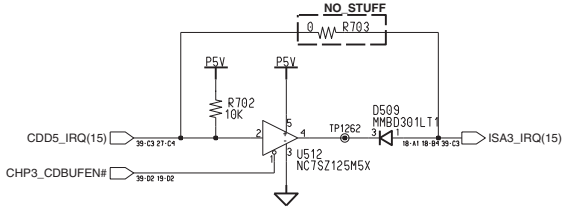

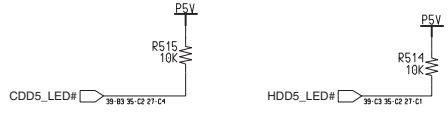

http://laptop-motherboard-schematic.blogspot.com/

CARDBUS CONTROLLER

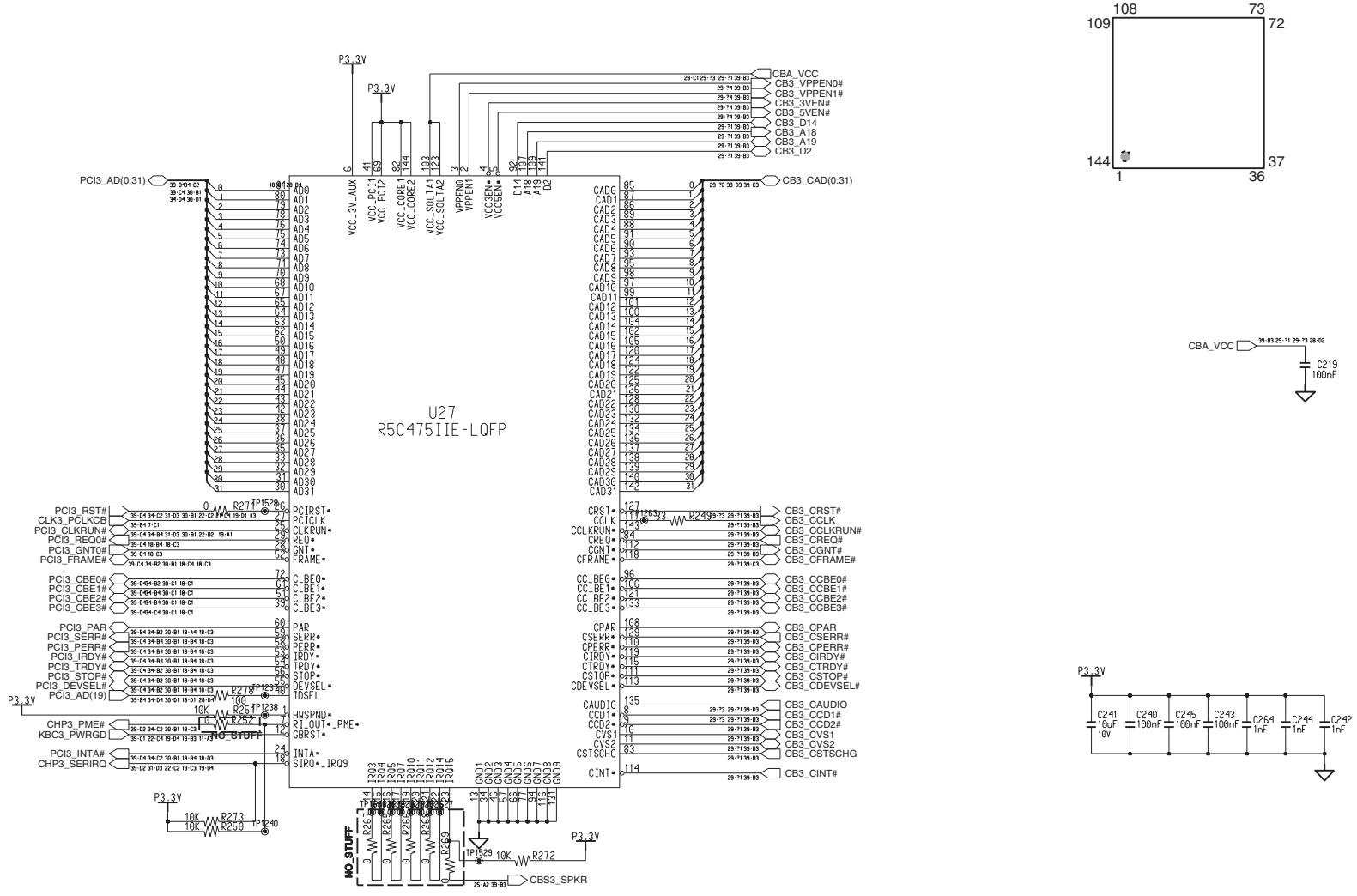

http://laptop-motherboard-schematic.blogspot.com/

CARDBUS SOCKET

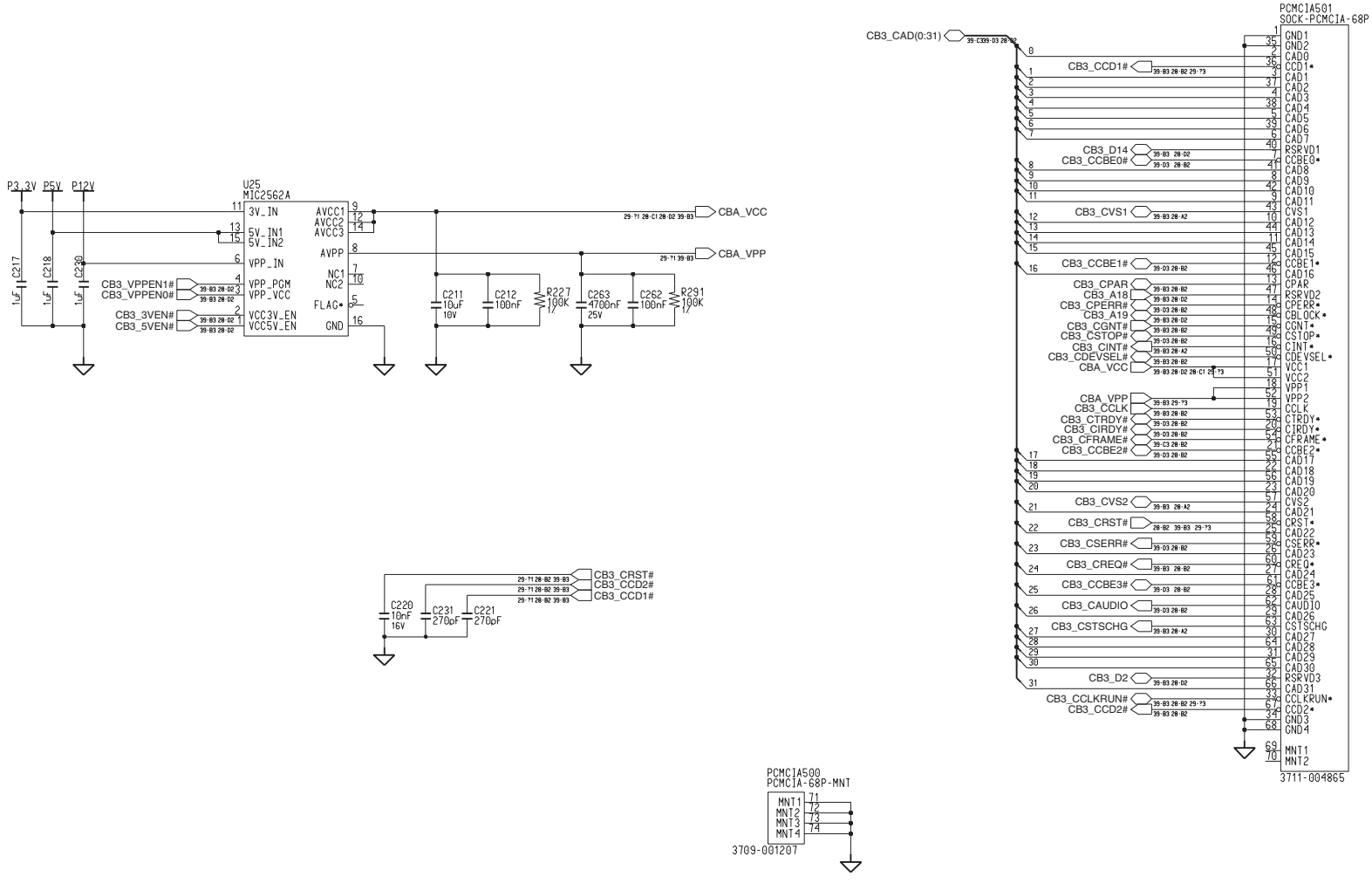

http://laptop-motherboard-schematic.blogspot.com/

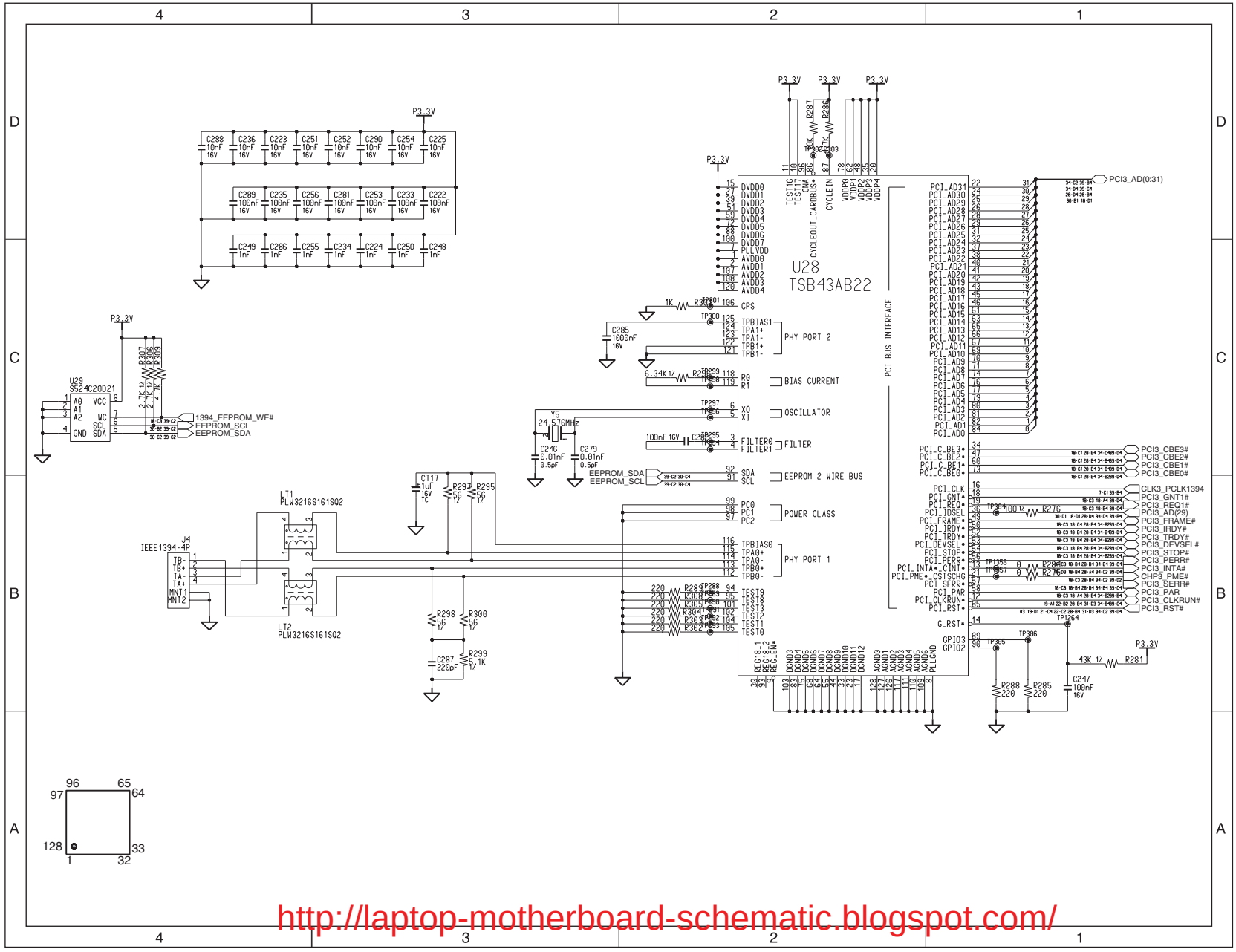

http://laptop-motherboard-schematic.blogspot.com/

GPIO Setting

GPIO	Pin No.	Multi With	PowerOn Default	Assign	Net Name
0	3	XDO	GPO	GPO	
1	2	XD1	GPO	GPO	
2	1	XD2	GPO	GPO	
3	100	XD3	GPO	GPO	
4	99	XD4	GPO	GPO	
5	98	XD5	GPO	GPO	
6	97	XD6	GPO	GPO	
7	96	XD7	GPO	GPO	
10	81	XD10	GPO	GPO	
11	80	XD11	GPO	GPO	
12	79	XD12	GPO	GPO	
13	78	XD13	GPO	GPO	
14	77	XD14	GPO	GPO	
15	76	XD15	GPO	GPO	
16	75	XD16	GPO	GPO	
17	74	XD17	GPO	GPO	
20	95	XD20	GPO	GPO	
21	94	XD21	GPO	GPO	
22	93	XD22	GPO	GPO	
23	92	XD23	GPO	GPO	
24	91	XD24	GPO	GPO	
25	72	XD25	GPO	GPO	
26	87	XD26	GPO	GPO	
27	86	XD27	GPO	GPO	
30	85	XD30	GPO	GPO	
31	84	XD31	GPO	GPO	
32	83	XD32	GPO	GPO	
33	82	XD33	GPO	GPO	
34	5	XD34	GPO		
35	19	XD35	GPO		KBC3_EXTSMI*
36	6	XD36			PCI3_CLKRUN*
37	71	XD37	GPO		

Strap Configuration

DTR1*/BADDR	Base Address	0 : 2Eh - 2Fh 1 : 4Eh - 4Fh
XCNF0		0 : XRDY Enabled 1 : XRDY Disabled
XCNF1	0 : Normal Mode	(1 : Latch Mode)
XCNF2	1 : GPIO10 - 17	(0 : XA12 - 19)

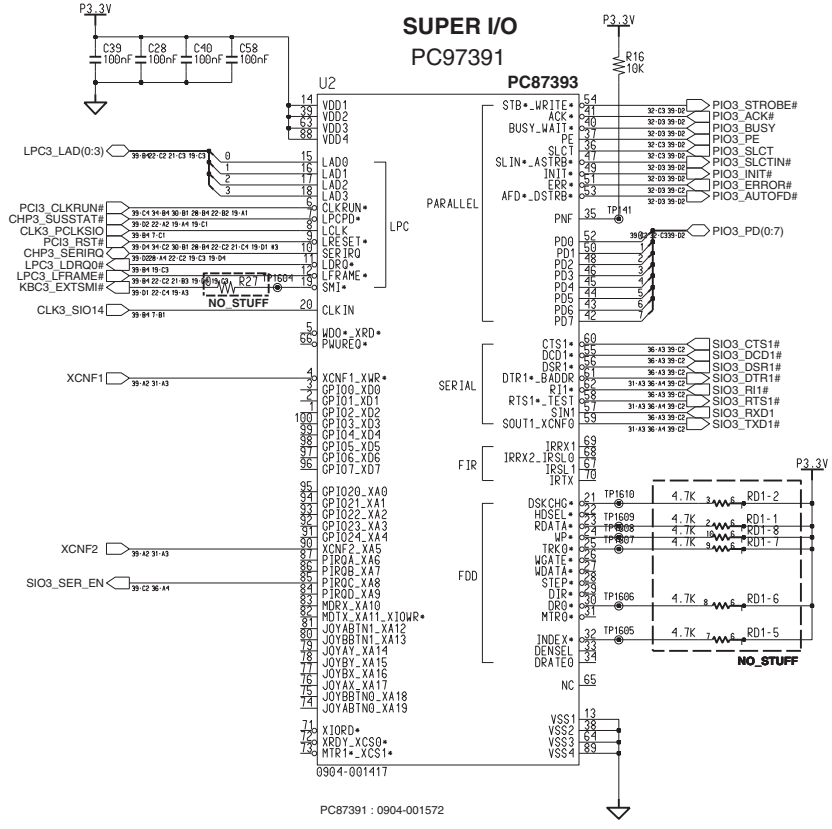

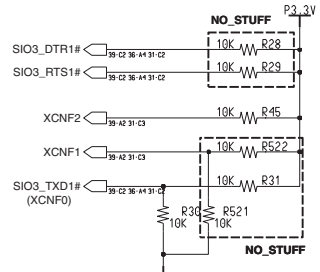

http://laptop-motherboard-schematic.blogspot.com/

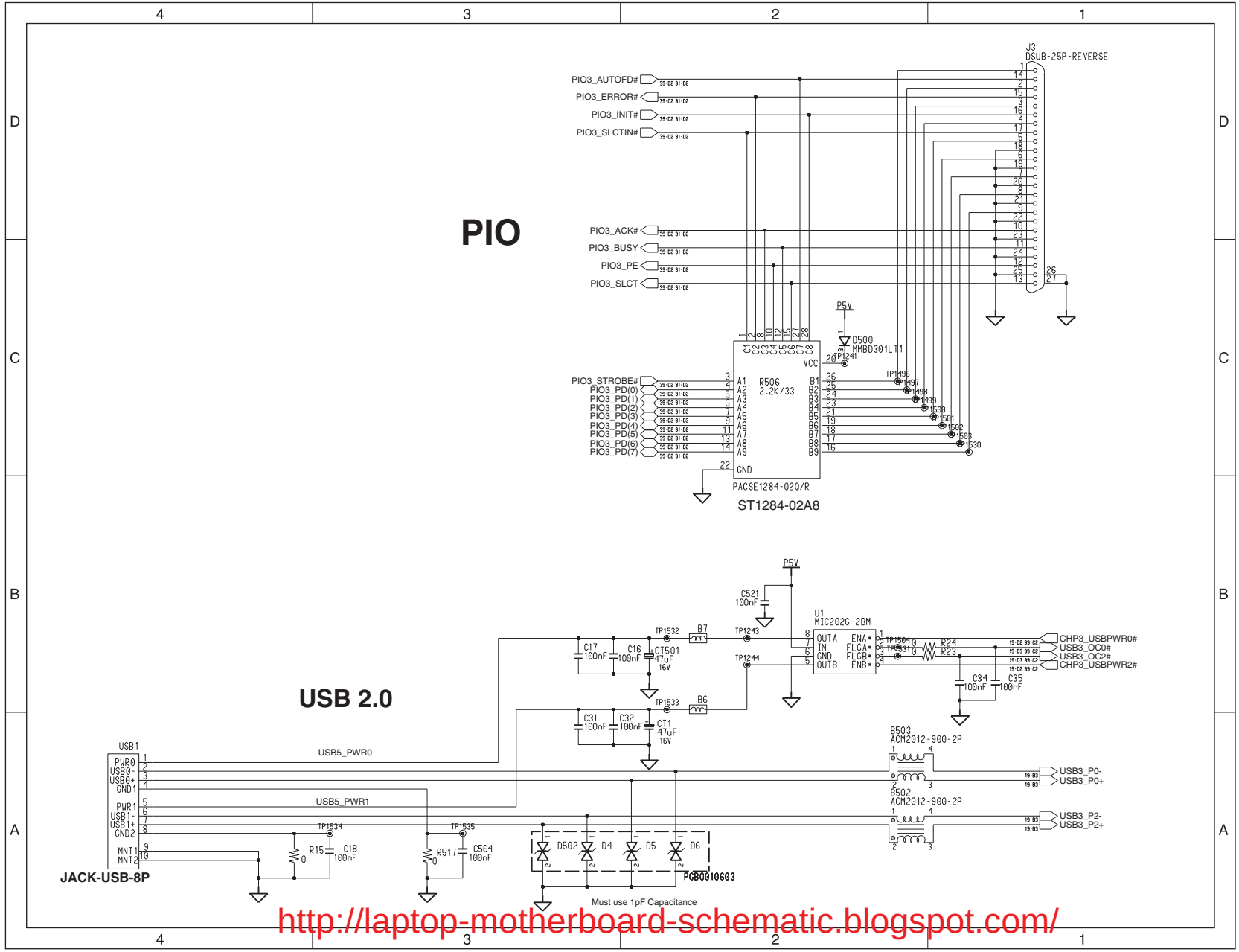

http://laptop-motherboard-schematic.blogspot.com/

MDC MODEM

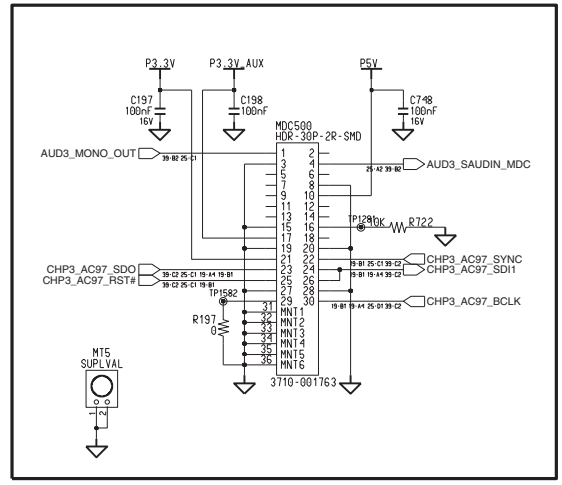

Kinnereth

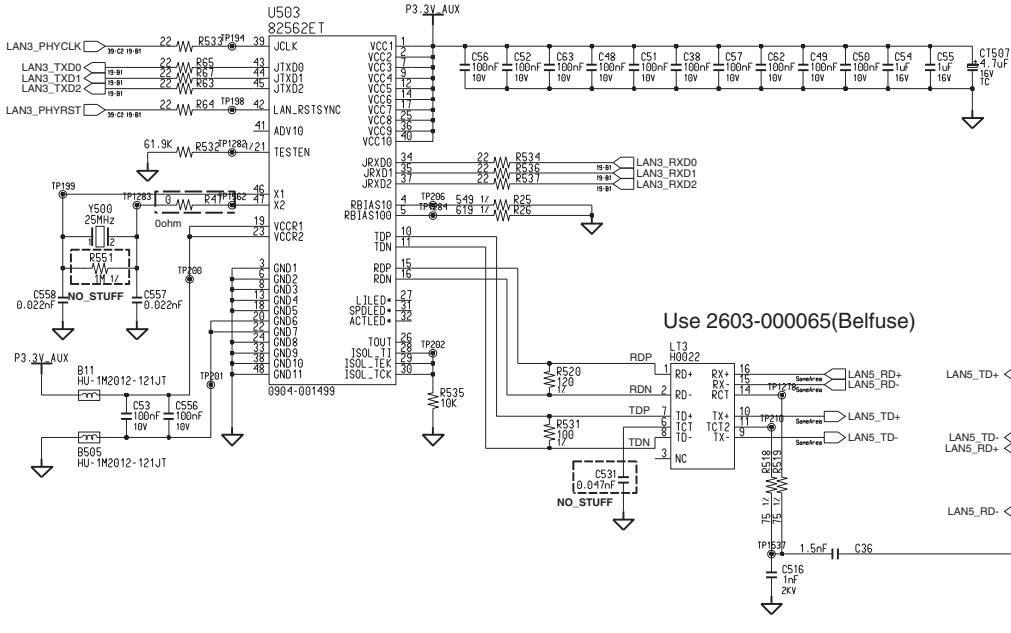

http://laptop-motherboard-schematic.blogspot.com/

MINIPCI(Wireless LAN only)

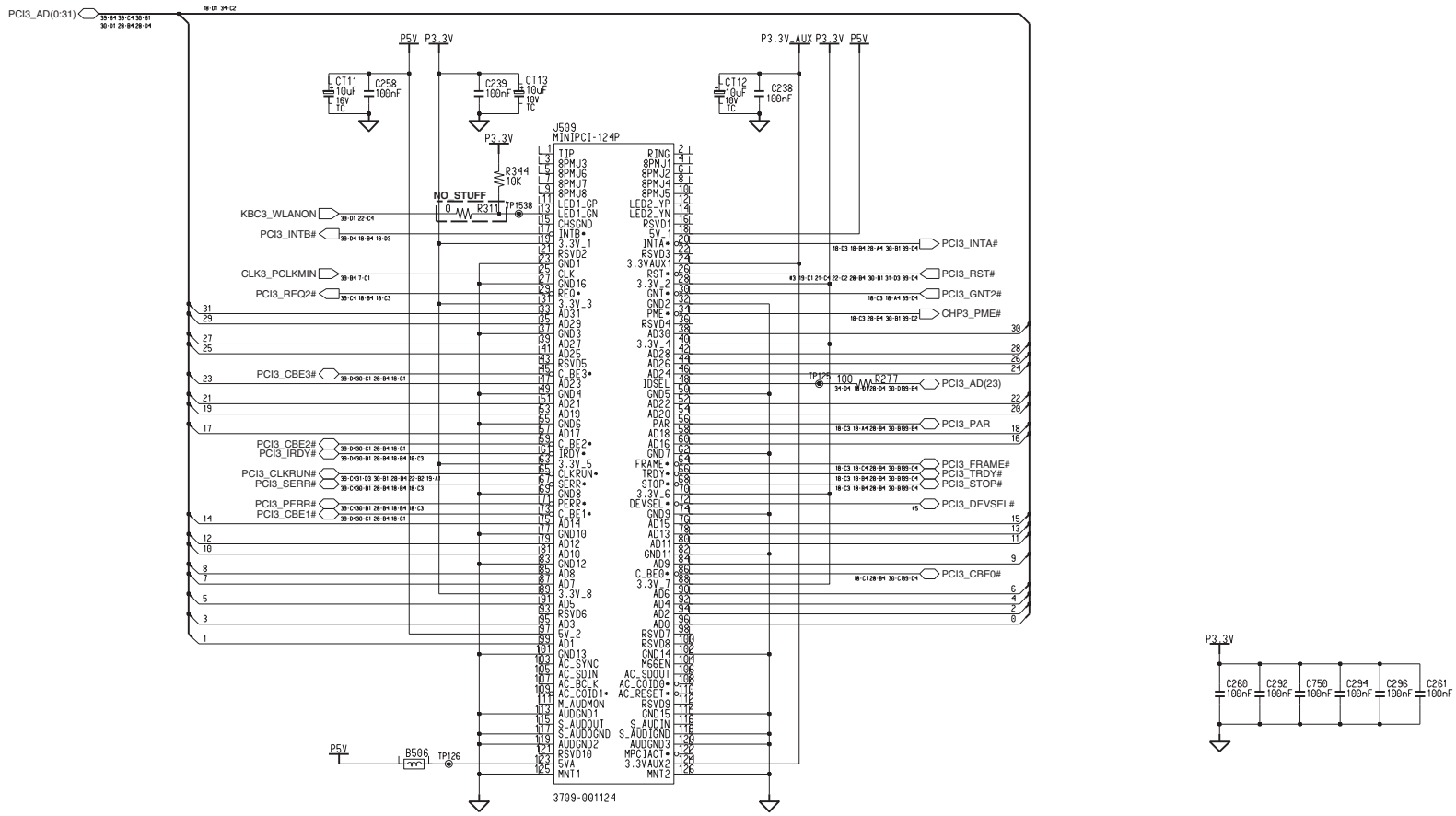

http://laptop-motherboard-schematic.blogspot.com/

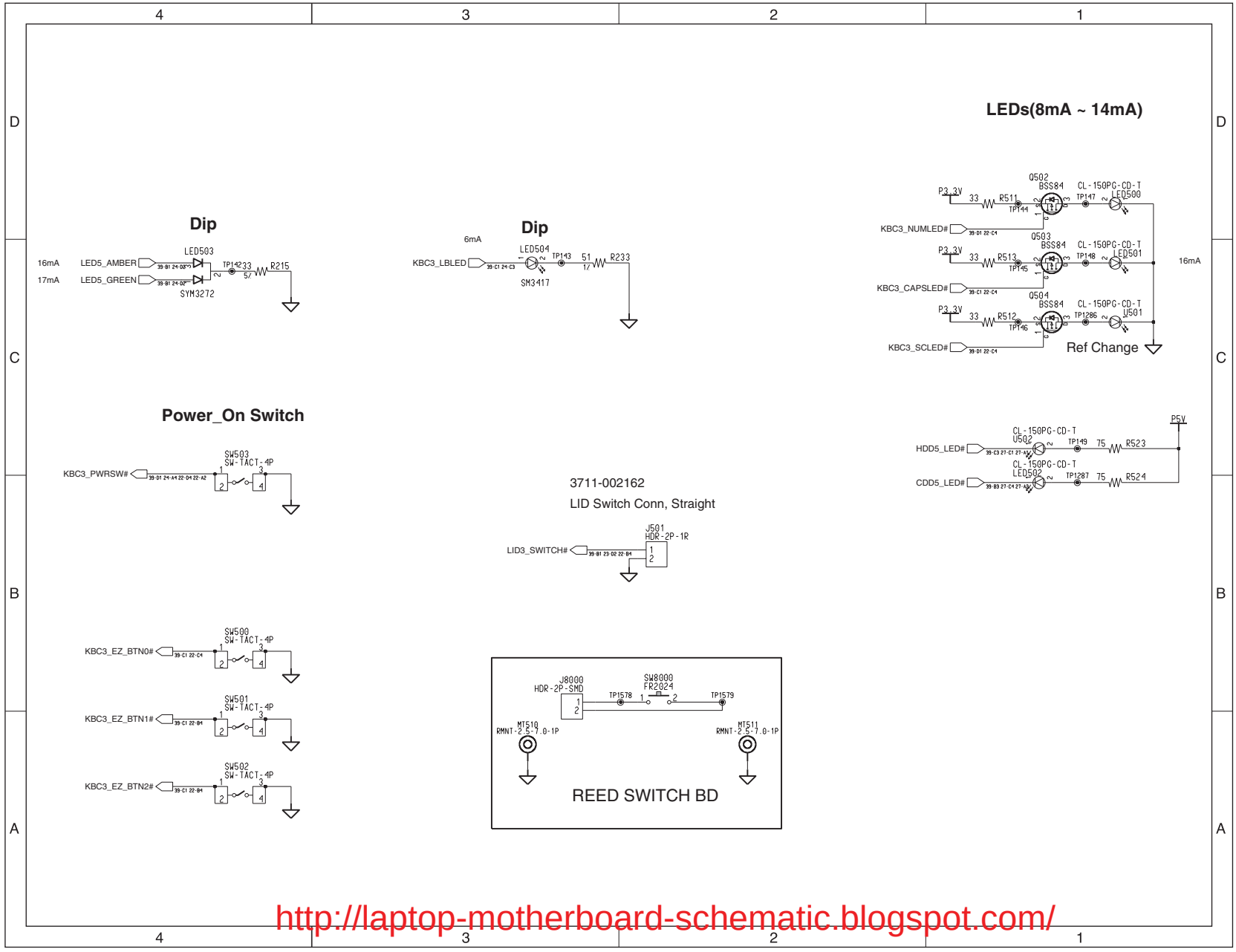

http://laptop-motherboard-schematic.blogspot.com/

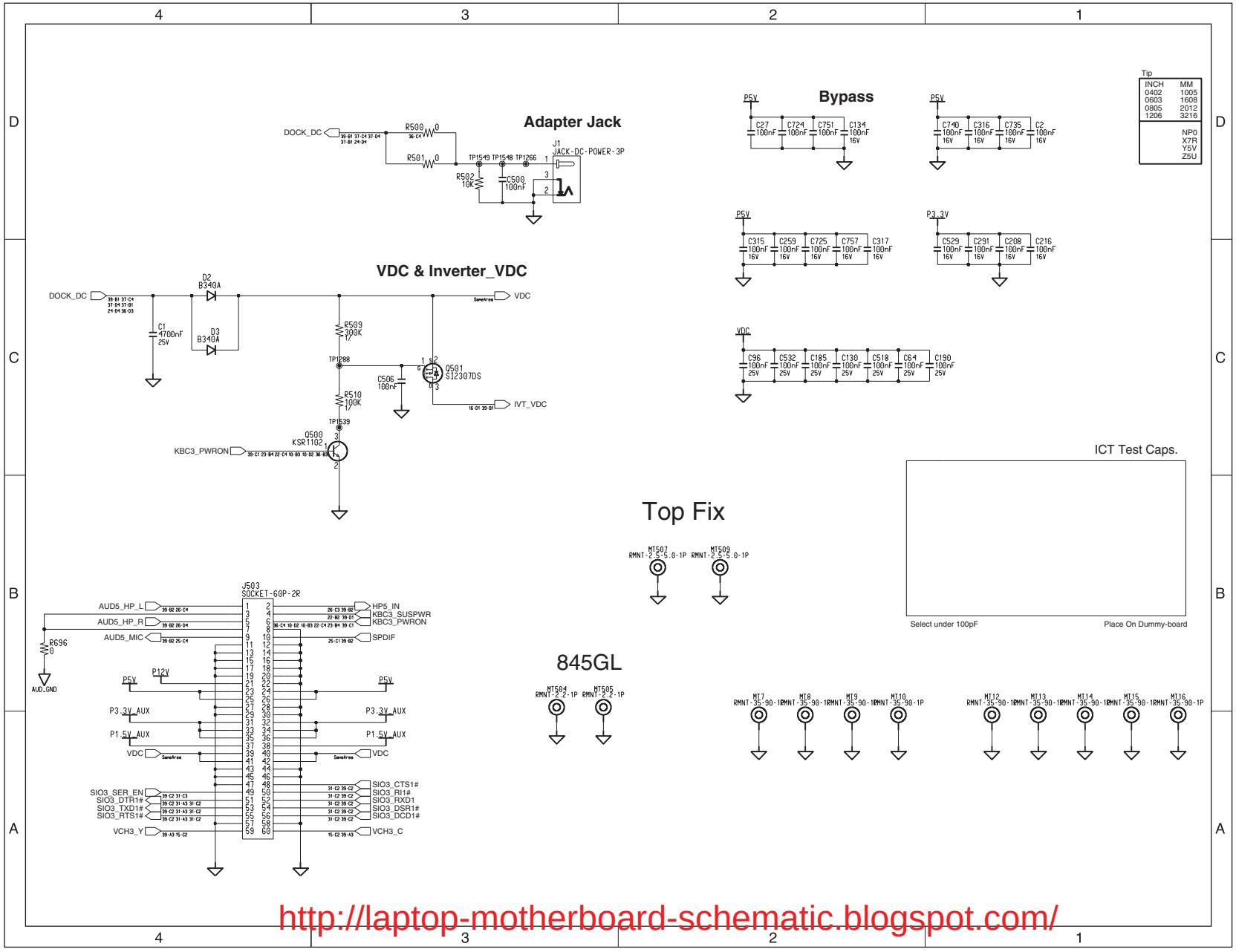

http://laptop-motherboard-schematic.blogspot.com/

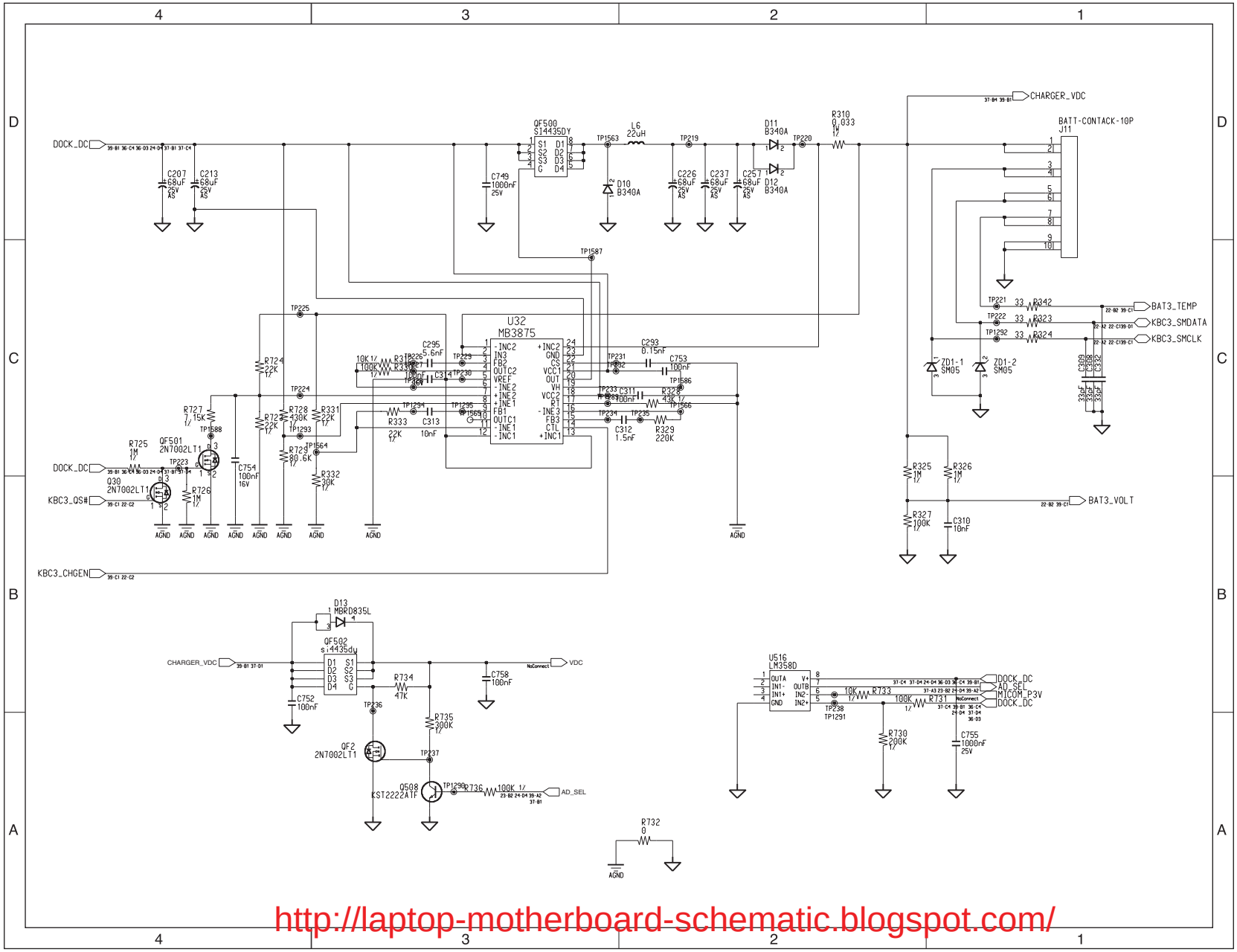

http://laptop-motherboard-schematic.blogspot.com/

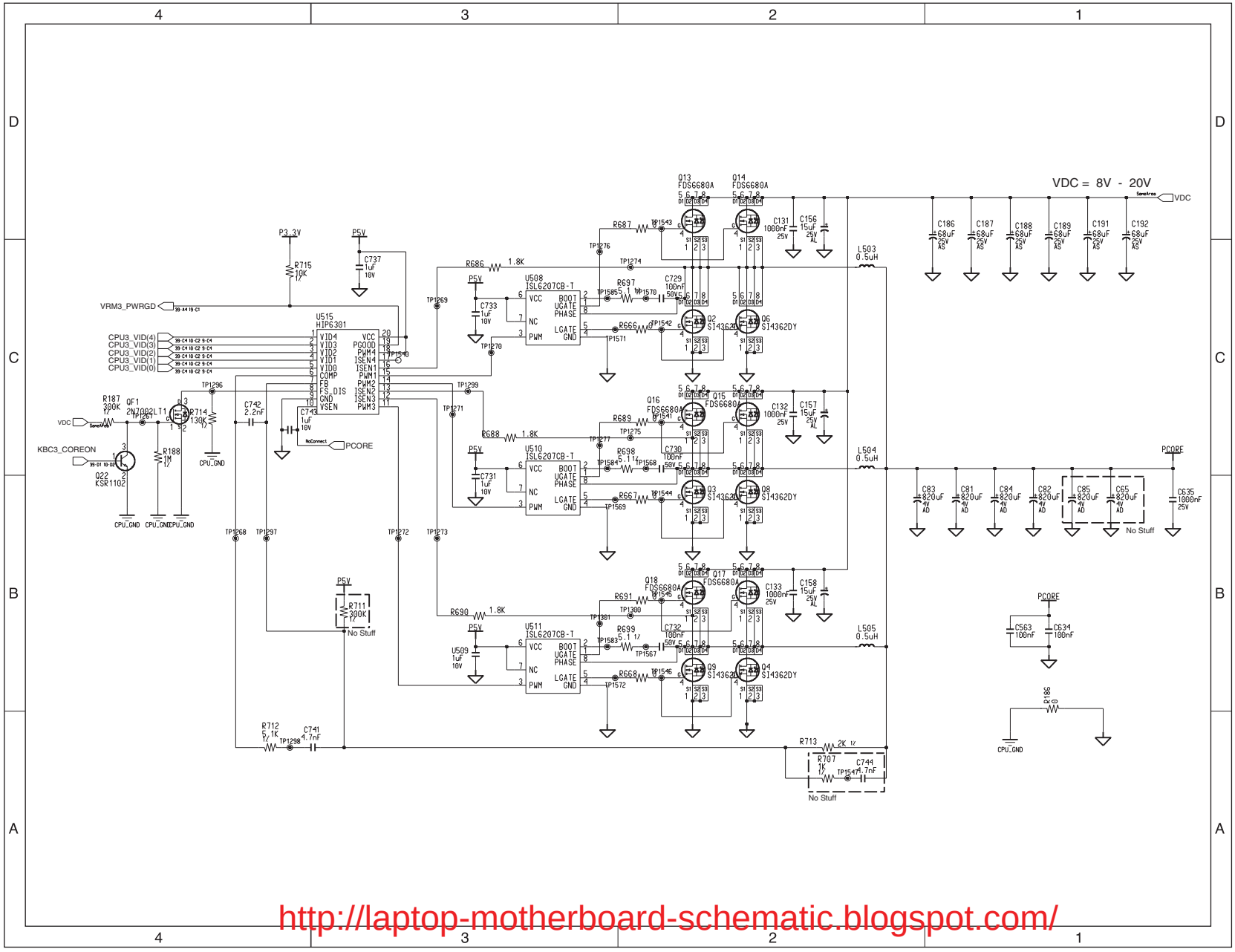

http://laptop-motherboard-schematic.blogspot.com/

TP1039 CPU1_INTR

TP1043 CPU1_SLP#
TP1044 CPU1_SMI#
TP920 CPU1_A20M#

TP855 CPU1_FERR#

TP857 CPU1_INIT#

TP860 CPU3_BSEL0

TP501 CPU1_STPCLK#
TP502 CPU2_THERMDA
TP503 CPU2_THERMDC

TP707 CPU1_IGNNE#
TP708 CPU3_VID(0)
TP709 CPU3_VID(1)
TP710 CPU3_VID(2)
TP711 CPU3_VID(3)
TP712 CPU3_VID(4)
TP713 CPU_GTLREF0
TP981 VID_PWRGD
TP453 CPU1_THRMTRIP#
TP454 CPU3_THRMTRIP#
TP431 CPU1_PROCHOT#
TP432 CPU1_PWRODCPU
TP1403 CPU1_NMI

TP430 CLK3_PCLK1394
TP952 CLK3_DOT48
TP953 CLK3_ICH14
TP954 CLK3_ICH48
TP955 CLK3_ICH66
TP956 CLK3_MCH66
TP961 CLK3_SIO14
TP545 CLK3_PCLKFWH
TP546 CLK3_PCLKICH
TP547 CLK3_PCLKMIN
TP548 CLK3_PCLKSIO
TP705 CLK3_PCLKCB
TP452 CLK3_PCLKMICOM

TP465 MCH_HVSWING0
TP466 MCH_HVSWING1

TP509 HI_VREF_GMCH
TP659 HI_VREF_ICH
TP455 HI_VSWING_GMCH
TP434 HI_VSWING_ICH

TP1407 SMB3_CLK
TP1033 SMB3_DATA
TP1408 SMB3_SCA
TP1409 SMB3_SCB
TP1410 SMB3_SDA
TP1411 SMB3_SDB

TP727 VRM3_PWRGD
TP1394 AGPBUSY#
TP970 SMBALERT#
TP595 SMB3_ALERT#

TP1024 PCI3_RST#
TP807 PCI3_CBE0#
TP808 PCI3_CBE1#
TP809 PCI3_CBE2#
TP746 PCI3_CBE3#
TP747 PCI3_GNT0#
TP748 PCI3_GNT1#
TP749 PCI3_GNT2#
TP750 PCI3_GNT3#
TP751 PCI3_GNT4#
TP752 PCI3_INTA#
TP753 PCI3_INTB#
TP754 PCI3_INTC#
TP755 PCI3_INTD#
TP756 PCI3_IRDY#
TP757 PCI3_PERR#
TP758 PCI3_REQ0#
TP759 PCI3_REQ1#
TP760 PCI3_REQ2#
TP761 PCI3_REQ3#
TP762 PCI3_REQ4#
TP763 PCI3_RSTF#
TP764 PCI3_SERR#
TP765 PCI3_STOP#
TP766 PCI3_TRDY#
TP478 PCI3_CLKRUN#
TP479 PCI3_DEVSEL#
TP531 PCI3_FRAME#
TP532 PCI3_PLOCK#
TP797 PCI3_AD(0)
TP798 PCI3_AD(1)
TP799 PCI3_AD(2)
TP800 PCI3_AD(3)
TP801 PCI3_AD(4)
TP802 PCI3_AD(5)
TP803 PCI3_AD(6)
TP804 PCI3_AD(7)
TP805 PCI3_AD(8)
TP806 PCI3_AD(9)
TP573 PCI3_AD(10)
TP574 PCI3_AD(11)
TP575 PCI3_AD(12)
TP576 PCI3_AD(13)
TP577 PCI3_AD(14)
TP578 PCI3_AD(15)
TP579 PCI3_AD(16)
TP580 PCI3_AD(17)
TP581 PCI3_AD(18)
TP582 PCI3_AD(19)
TP583 PCI3_AD(20)
TP584 PCI3_AD(21)
TP585 PCI3_AD(22)
TP522 PCI3_AD(23)
TP523 PCI3_AD(24)
TP524 PCI3_AD(25)
TP525 PCI3_AD(26)
TP526 PCI3_AD(27)
TP527 PCI3_AD(28)
TP528 PCI3_AD(29)
TP529 PCI3_AD(30)
TP530 PCI3_AD(31)
TP1406 PCI3_PAR

TP464 LPC3_LFRAME#
TP627 LPC3_LAD(0)
TP628 LPC3_LAD(1)
TP629 LPC3_LAD(2)
TP630 LPC3_LAD(3)
TP631 LPC3_LDRQ0#
TP632 LPC3_LDRQ1#

TP1023 M12C1_CLK
TP796 M12C1_DATA
TP1045 DVO01_CLK
TP861 DVO01_CLK#
TP504 DVO01_BLANK#
TP505 DVO01_FLDSTL
TP862 DVO01_D(0)
TP863 DVO01_D(1)
TP864 DVO01_D(2)
TP865 DVO01_D(3)
TP866 DVO01_D(4)
TP867 DVO01_D(5)
TP868 DVO01_D(6)
TP869 DVO01_D(7)
TP870 DVO01_D(8)
TP871 DVO01_D(9)
TP651 DVO01_D(10)
TP652 DVO01_D(11)
TP653 DVO01_HSYNC
TP654 DVO01_VSYNC

TP872 DVOC1_D(0)
TP873 DVOC1_D(1)
TP810 DVOC1_D(2)
TP811 DVOC1_D(3)
TP812 DVOC1_D(4)
TP813 DVOC1_D(5)
TP814 DVOC1_D(6)
TP815 DVOC1_D(7)
TP816 DVOC1_D(8)
TP817 DVOC1_D(9)
TP655 DVOC1_D(10)
TP656 DVOC1_D(11)
TP657 DVOC1_HSYNC
TP658 DVOC1_VSYNC
TP506 DVOC1_BLANK#
TP507 DVOC1_CLKOUT
TP508 DVOC1_FLDSTL
TP433 DVOC1_CLKOUT#

TP536 VCH3_BKLTON
TP625 LCD3_BKLTON
TP443 VCH3_LCDVDDON
TP1011 LCD5_BRIT
TP1012 LCD_VDD3V
TP633 LVDS1_ACLK+
TP634 LVDS1_ACLK-
TP1013 LVDS1_A0+
TP1014 LVDS1_A0-
TP1015 LVDS1_A1+
TP1016 LVDS1_A1-
TP1017 LVDS1_A2+
TP1018 LVDS1_A2-

TP722 VGA3_HSYNC
TP723 VGA3_VSYNC
TP724 VGA5_HSYNC
TP725 VGA5_VSYNC
TP975 VGA3_DDCC
TP976 VGA3_DDCD
TP977 VGA5_DDCC
TP978 VGA5_DDCD
TP1393 VGA_RED
TP1413 VGA_RED#
TP980 VGA_GREEN
TP726 VGA_GREEN#
TP1412 VGA_BLUE
TP979 VGA_BLUE#

TP721 TV1_CLKOUT
TP1376 VCH3_C
TP1377 VCH3_Y

TP1046 HDD5_CS1#
TP1047 HDD5_CS3#
TP1048 HDD5_D(0)
TP1049 HDD5_D(1)
TP1050 HDD5_D(2)
TP1051 HDD5_D(3)
TP1052 HDD5_D(4)
TP1053 HDD5_D(5)
TP1054 HDD5_D(6)
TP1055 HDD5_D(7)
TP1056 HDD5_D(8)
TP1057 HDD5_D(9)
TP820 HDD5_D(10)
TP821 HDD5_D(11)
TP822 HDD5_D(12)
TP823 HDD5_D(13)
TP824 HDD5_D(14)
TP825 HDD5_D(15)
TP1058 HDD5_DREQ
TP1059 HDD5_IOR#
TP1060 HDD5_IOW#
TP1061 HDD5_LED#
TP826 HDD5_DACK#
TP827 HDD5_IORDY
TP510 ISA3_IRQ(14)
TP1388 HDD5_A0
TP1389 HDD5_A1
TP1390 HDD5_A2

TP947 CDD5_DACK#
TP948 CDD5_IORDY
TP698 CDD5_CDRST#
TP539 CDD5_IRQ(15)
TP511 ISA3_IRQ(15)
TP1384 CDD5_A0
TP1385 CDD5_A1
TP1386 CDD5_A2
TP1428 CDD5_CS1#
TP1429 CDD5_CS3#
TP1430 CDD5_D(0)
TP1431 CDD5_D(1)
TP1432 CDD5_D(2)
TP1433 CDD5_D(3)
TP1434 CDD5_D(4)
TP1435 CDD5_D(5)
TP1436 CDD5_D(6)
TP1437 CDD5_D(7)
TP1438 CDD5_D(8)
TP1439 CDD5_D(9)
TP941 CDD5_D(10)
TP942 CDD5_D(11)
TP943 CDD5_D(12)
TP944 CDD5_D(13)
TP945 CDD5_D(14)
TP946 CDD5_D(15)
TP1440 CDD5_DREQ
TP1441 CDD5_IOR#
TP1442 CDD5_IOW#
TP1443 CDD5_LED#

TP1372 CDD5_L
TP1373 CDD5_R
TP1402 CDD5_COM

TP995 CB3_CAUDIO
TP996 CB3_CCBE0#
TP997 CB3_CCBE1#
TP998 CB3_CCBE2#
TP999 CB3_CCBE3#
TP1000 CB3_CIRDY#
TP1001 CB3_CPERR#
TP938 CB3_CSERR#
TP939 CB3_CSTOP#
TP940 CB3_CTRDY#
TP985 CB3_CAD(0)
TP986 CB3_CAD(1)
TP987 CB3_CAD(2)
TP988 CB3_CAD(3)
TP989 CB3_CAD(4)
TP990 CB3_CAD(5)
TP991 CB3_CAD(6)
TP992 CB3_CAD(7)
TP993 CB3_CAD(8)
TP994 CB3_CAD(9)
TP734 CB3_CAD(10)
TP735 CB3_CAD(11)
TP736 CB3_CAD(12)
TP737 CB3_CAD(13)
TP738 CB3_CAD(14)
TP739 CB3_CAD(15)
TP740 CB3_CAD(16)
TP741 CB3_CAD(17)
TP742 CB3_CAD(18)
TP743 CB3_CAD(19)
TP744 CB3_CAD(20)
TP745 CB3_CAD(21)
TP682 CB3_CAD(22)
TP683 CB3_CAD(23)
TP684 CB3_CAD(24)
TP685 CB3_CAD(25)
TP686 CB3_CAD(26)
TP687 CB3_CAD(27)
TP688 CB3_CAD(28)
TP689 CB3_CAD(29)
TP690 CB3_CAD(30)
TP691 CB3_CAD(31)
TP692 CB3_CFRAME#
TP693 CB3_CSTSCHG
TP694 CB3_VPPEN0#
TP695 CB3_VPPEN1#
TP537 CB3_CCLKRUN#
TP538 CB3_CDEVSEL#
TP1371 CB3_D2
TP1379 CB3_A18
TP1380 CB3_A19
TP1381 CB3_D14
TP1382 CBA_VCC
TP1383 CBA_VPP
TP1398 CB3_CCLK
TP1399 CB3_CPAR
TP1400 CB3_CVS1
TP1401 CB3_CVS2
TP1419 CB3_3VEN#
TP1420 CB3_5VEN#
TP1421 CB3_CCD1#
TP1422 CB3_CCD2#
TP1423 CB3_CGNT#
TP1424 CB3_CINT#
TP1425 CB3_CREQ#
TP1426 CB3_CRST#
TP1427 CBS3_SPKR

TP698 THRM3_OVERT#
TP699 CH3_SERIRQ
TP700 CH3_SLPS1#
TP701 CH3_SLPS3#
TP702 CH3_SLPS5#
TP949 CH3_VBIAS
TP485 CH3_BIOSTBL#
TP486 CH3_CDBUFEN#
TP487 CH3_CPUPERF#
TP488 CH3_SPDSELA#
TP489 CH3_SPDSELB#
TP426 CH3_SUSSTAT#
TP1444 CH3_PME#
TP1445 CH3_SPKR

TP427 CH3_USBPWR0#
TP428 CH3_USBPWR2#
TP971 USB3_OC0#
TP972 USB3_OC2#
TP973 USB5_PWR0
TP974 USB5_PWR1

TP484 CH3_AC97_SDO
TP444 CH3_AC97_BCLK
TP445 CH3_AC97_RST#
TP446 CH3_AC97_SDI0
TP447 CH3_AC97_SDI1
TP448 CH3_AC97_SDI2
TP449 CH3_AC97_SYNC

TP540 CH3_BIOSWP#
TP541 CH3_HDDRST#
TP542 CH3_PCREQA#
TP543 CH3_PCREQB#
TP544 CH3_RTCRST#

TP623 LAN3_PHYCLK
TP624 LAN3_PHYRST

TP729 AUD5_SAUDIN
TP730 AUD5_SPK_L+
TP731 AUD5_SPK_L-
TP732 AUD5_SPK_R+
TP733 AUD5_SPK_R-
TP1414 AUD5_HP_L
TP1415 AUD5_HP_R
TP1416 AUD5_SPKR
TP1395 AUD5_CDL
TP1396 AUD5_CDR
TP982 AUD5_CDCOM
TP1397 AUD5_MIC
TP1446 AUD3_SAUDIN_MDC
TP1447 AUD5_LINE_OUT_L
TP1448 AUD5_LINE_OUT_R
TP483 AUD3_MONO_OUT

TP1365 SPDIF

TP1375 HP5_IN
TP1405 MIC_TEST

TP450 CH3_AUTOBIOS#
TP451 CH3_PAL_NTSC#

TP1361 GPIO2
TP1362 GPIO3
TP1363 GPIO4
TP1364 GPIO5
TP1374 GPIO17

TP1366 THRM#
TP1367 VREF1
TP1368 XCNF1
TP1369 XCNF2
TP1370 AD_SEL

TP1025 PIO3_ACK#
TP1026 PIO3_BUSY
TP1027 PIO3_SLCT
TP1392 PIO3_PE
TP480 PIO3_AUTOFD#
TP481 PIO3_SLCTIN#
TP482 PIO3_STROBE#
TP767 PIO3_INIT#
TP768 PIO3_PD(0)
TP769 PIO3_PD(1)
TP770 PIO3_PD(2)
TP771 PIO3_PD(3)
TP772 PIO3_PD(4)
TP773 PIO3_PD(5)
TP774 PIO3_PD(6)
TP775 PIO3_PD(7)
TP533 PIO3_ERROR#

TP1031 SIO3_RI1#
TP1032 SIO3_RXD1
TP534 SIO3_SER_EN
TP715 SIO3_CTS1#
TP716 SIO3_DCD1#
TP717 SIO3_DSR1#
TP718 SIO3_DTR1#
TP719 SIO3_RTS1#
TP720 SIO3_TXD1#
TP1358 RI1#

TP456 KBC3_LAN_PWROK
TP457 1394_EEPROM_WE#
TP818 EEPROM_SCL
TP819 EEPROM_SDA

TP669 KBC5_KSI(0)
TP670 KBC5_KSI(1)
TP671 KBC5_KSI(2)
TP672 KBC5_KSI(3)
TP673 KBC5_KSI(4)
TP674 KBC5_KSI(5)
TP675 KBC5_KSI(6)
TP676 KBC5_KSI(7)
TP677 KBC5_KSO(0)
TP678 KBC5_KSO(1)
TP679 KBC5_KSO(2)
TP680 KBC5_KSO(3)
TP681 KBC5_KSO(4)
TP618 KBC5_KSO(5)
TP619 KBC5_KSO(6)
TP620 KBC5_KSO(7)
TP621 KBC5_KSO(8)
TP622 KBC5_KSO(9)
TP521 KBC5_KSO(10)
TP458 KBC5_KSO(11)
TP459 KBC5_KSO(12)
TP460 KBC5_KSO(13)
TP461 KBC5_KSO(14)
TP462 KBC5_KSO(15)

TP665 KBC3_SMDATA
TP667 KBC3_SUSPWR
TP668 KBC3_WLANON
TP661 KBC3_BKLTON
TP662 KBC3_COREON
TP663 KBC3_LBLED#
TP664 KBC3_PWRSW#
TP665 KBC3_SCLED#
TP512 KBC3_CPURST#
TP513 KBC3_EXTSMI#
TP514 KBC3_FANCTRL
TP515 KBC3_FWHRST#
TP516 KBC3_ICHPWR#
TP517 KBC3_NUMLED#
TP518 KBC3_RSMRST#
TP519 KBC3_RUNSCI#
TP520 KBC3_SPKMUTE
TP435 KBC3_CAPSLED#
TP436 KBC3_EZ_BTN0#
TP437 KBC3_EZ_BTN1#
TP438 KBC3_EZ_BTN2#
TP439 KBC3_VRPWRGD#
TP440 KBC3_WAKESCI#

TP442 KBC5_FANB_ON#
TP1002 KBC3_A20G
TP1003 KBC3_BRIT
TP1004 KBC3_RST#
TP838 KBC3_CHGEN
TP839 KBC3_LBLED
TP840 KBC3_PWRGD
TP841 KBC3_PWRON
TP778 KBC3_SMCLK
TP1404 KBC3_QS#

TP1417 BAT3_TEMP
TP1418 BAT3_VOLT
TP1378 BATLOW#

TP1028 PS25_KCLK
TP1029 PS25_MCLK
TP1030 PS25_TCLK
TP776 PS25_KDATA
TP777 PS25_MDATA
TP714 PS25_TDATA

TP779 LED5_AMBER
TP780 LED5_GREEN
TP626 LED3_CHARGE

TP463 LID3_SWITCH#

TP983 BVL3_CDIN#
TP984 BVL3_INTR#

TP1449 KBC3_THERM_SMCLK
TP1450 KBC3_THERM_SMDATA

TP451 AGND
TP452 AGND

TP1453 AVDD
TP1454 AVDD

TP1455 AUD_GND
TP1456 AUD_GND
TP1457 CPU_GND
TP1458 CPU_GND
TP1459 CPU_GND
TP1460 CPU_GND
TP1461 GROUND
TP1462 GROUND
TP1463 GROUND
TP1464 GROUND
TP1465 MICOM_P3V
TP1466 MICOM_P3V
TP1467 MICOM_P3V
TP1468 MICOM_P3V
TP1469 P5V
TP1470 P5V
TP1471 P5V
TP1472 P5V
TP1473 P12V
TP1474 P1.5V
TP1475 P1.5V
TP1476 P1.5V
TP1477 P1.5V
TP1478 P3.3V
TP1479 P3.3V
TP1480 P3.3V
TP1481 P3.3V

TP1482 PCORE
TP1483 PCORE
TP1484 PCORE
TP1485 PCORE

TP1486 PRTC_BAT

TP1487 P1.5V_AUX
TP1488 P1.5V_AUX
TP1489 P1.5V_AUX
TP1490 P1.5V_AUX
TP1491 P3.3V_AUX
TP1492 P3.3V_AUX
TP1493 P3.3V_AUX
TP1494 P3.3V_AUX

TP1495 VCC_VID

TP1387 DOCK_DC

TP1391 IVT_VDC

TP1359 VDC

TP1360 VDDV

TP728 ADAPTOR_IN#

TP697 CHARGER_VDC

TP650 DCK3_DCKIN#

http://laptop-motherboard-schematic.blogspot.com/

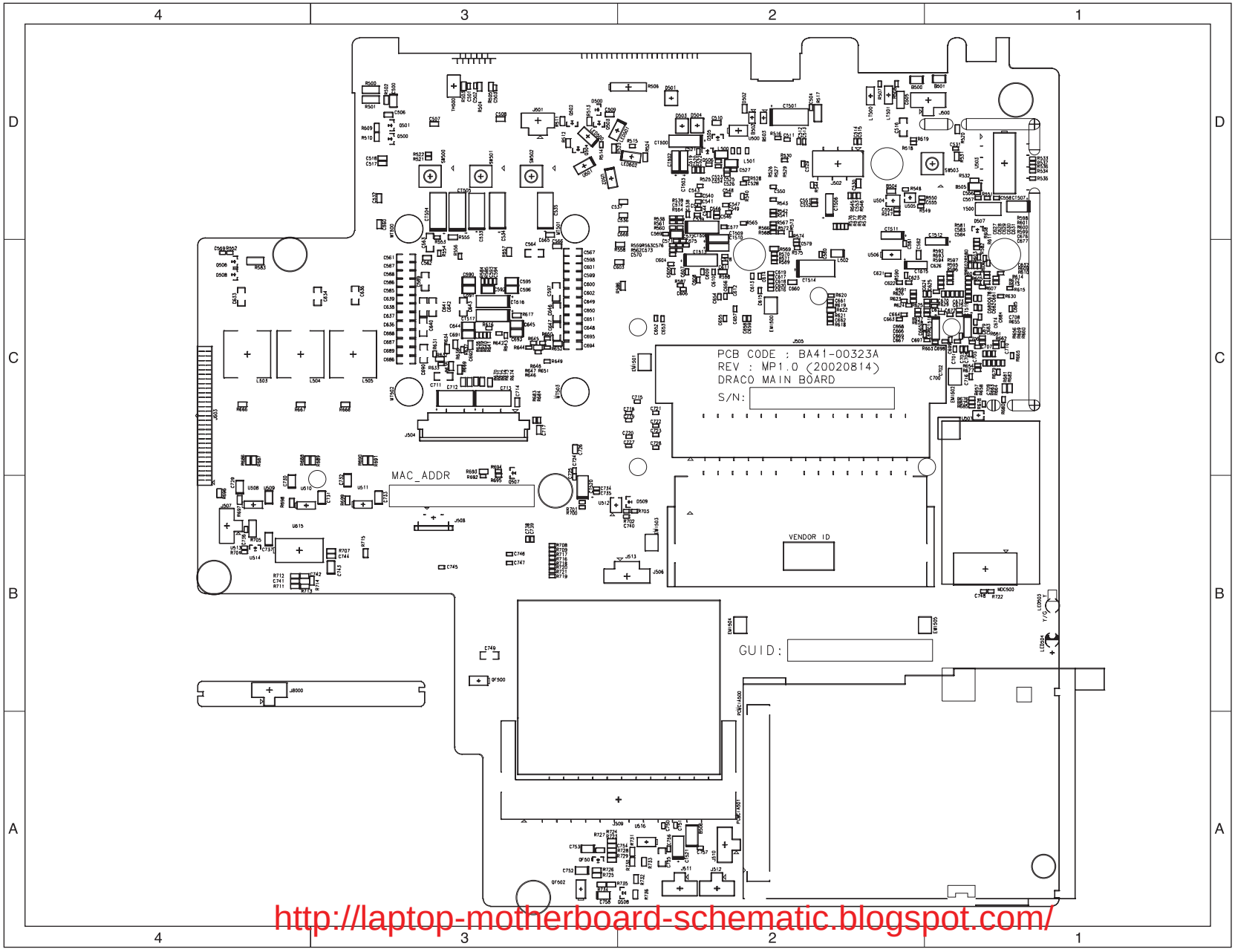

http://laptop-motherboard-schematic.blogspot.com/

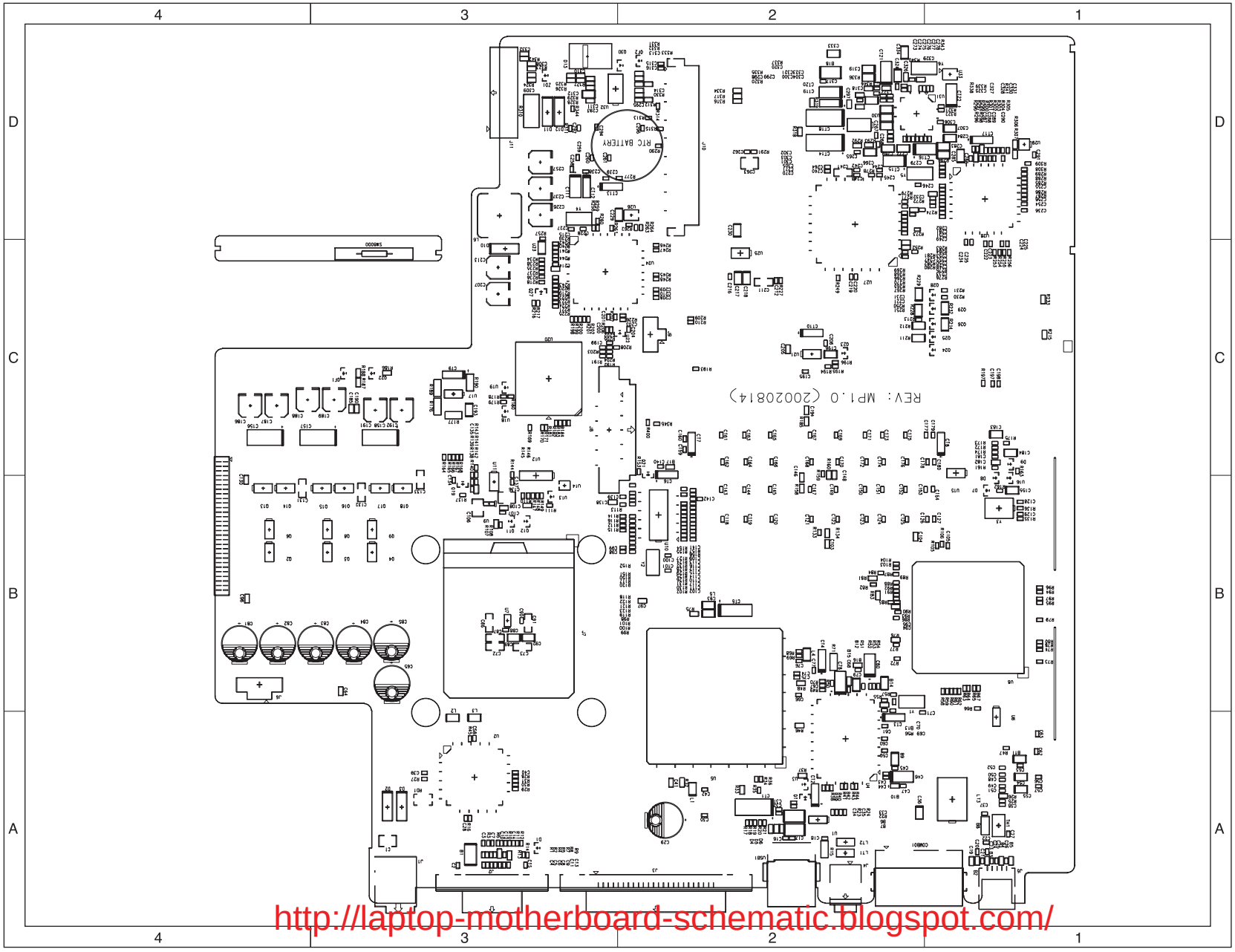

http://laptop-motherboard-schematic.blogspot.com/

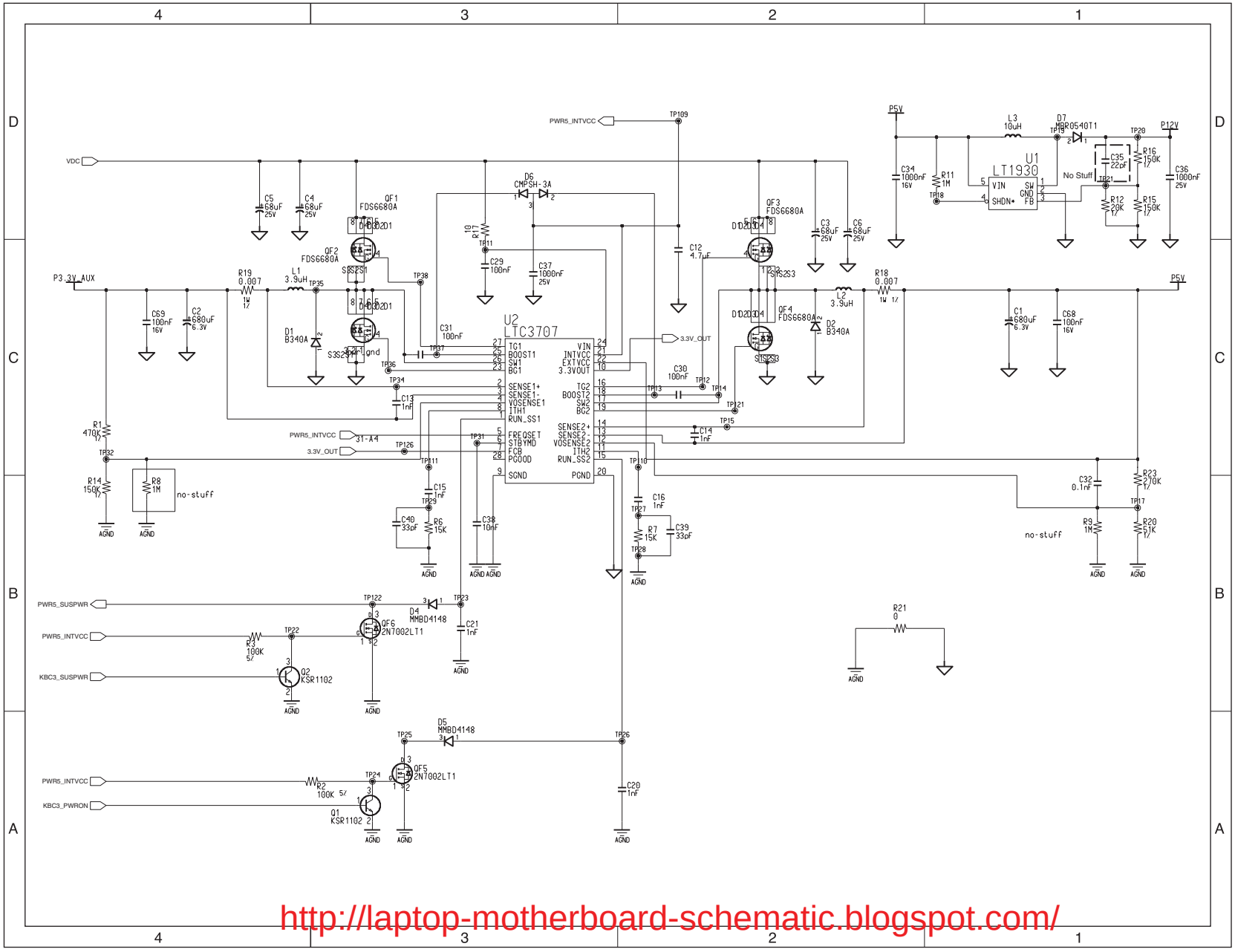
VDC
P3.3V_AUX
PWR5_INTVCC
P5V
P12V
3.3V_OUT
PWR5_SUSPWR
KBC3_SUSPWR
KBC3_PWRON
U2
LTC3707
U1
LT1930
VIN
SHDN*
SW
GND
FB
No Stuff
no-stuff
AGND
QF1
QF2
QF3
QF4
QF5
QF6
FDS6680A
D1
B340A
D2
B340A
D4
MMBD4148
D5
MMBD4148
D6
CMPSH-3A
D7
MBR0540T1
Q1
KSR1102
Q2
KSR1102
2N7002LT1
L1
3.9uH
L2
3.9uH
L3
10uH
R19
0.007
R18
0.007
R21
0
C12
4.7uF
C29
100nF
C37
1000nF
C31
100nF
C30
100nF
C13
1nF
C14
1nF
C15
1nF
C16
1nF
C20
1nF
C21
1nF
C32
0.1nF
C40
33pF
C39
33pF
C38
10nF
C5
68uF
25V
C4
68uF
25V
C3
68uF
25V
C6
68uF
25V
C34
1000nF
16V
C35
22pF
C36
1000nF
25V
C9
100nF
16V
C2
680uF
6.3V
C1
680uF
6.3V
C8
100nF
16V
R1
470K
R14
150K
R8
1M
R6
15K
R7
15K
R3
100K
R2
100K
R11
1M
R16
150K
R12
20K
R15
150K
R23
270K
R9
1M
R20
51K
R17
10
TP109
TP122
TP23
TP22
TP25
TP26
TP24
TP32
TP126
TP31
TP111
TP110
TP27
TP28
TP17
TP20
TP19
TP18
TP21
TP35
TP38
TP36
TP37
TP34
TP33
TP12
TP14
TP121
TP15
TP11
TP29
http://laptop-motherboard-schematic.blogspot.com/

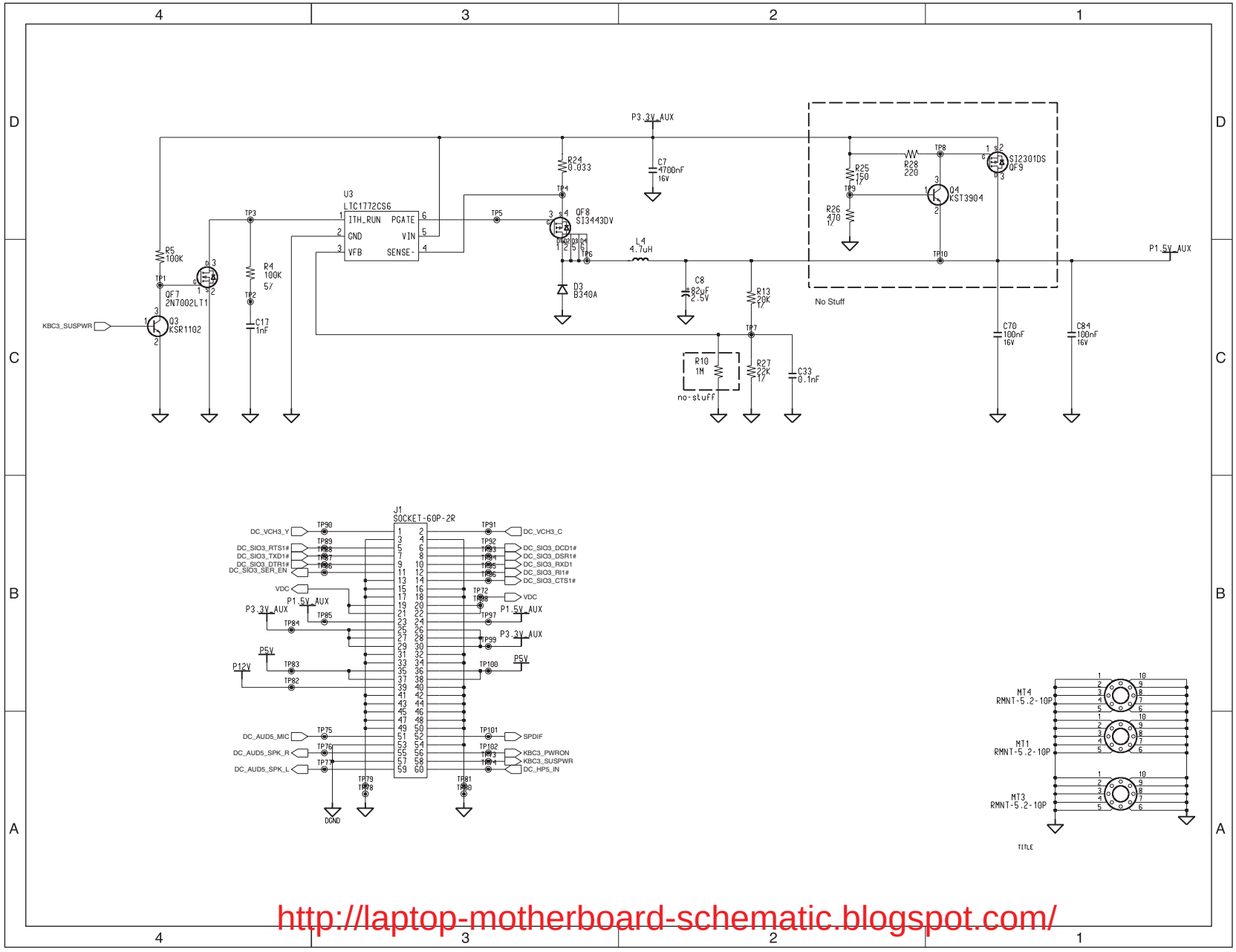

http://laptop-motherboard-schematic.blogspot.com/

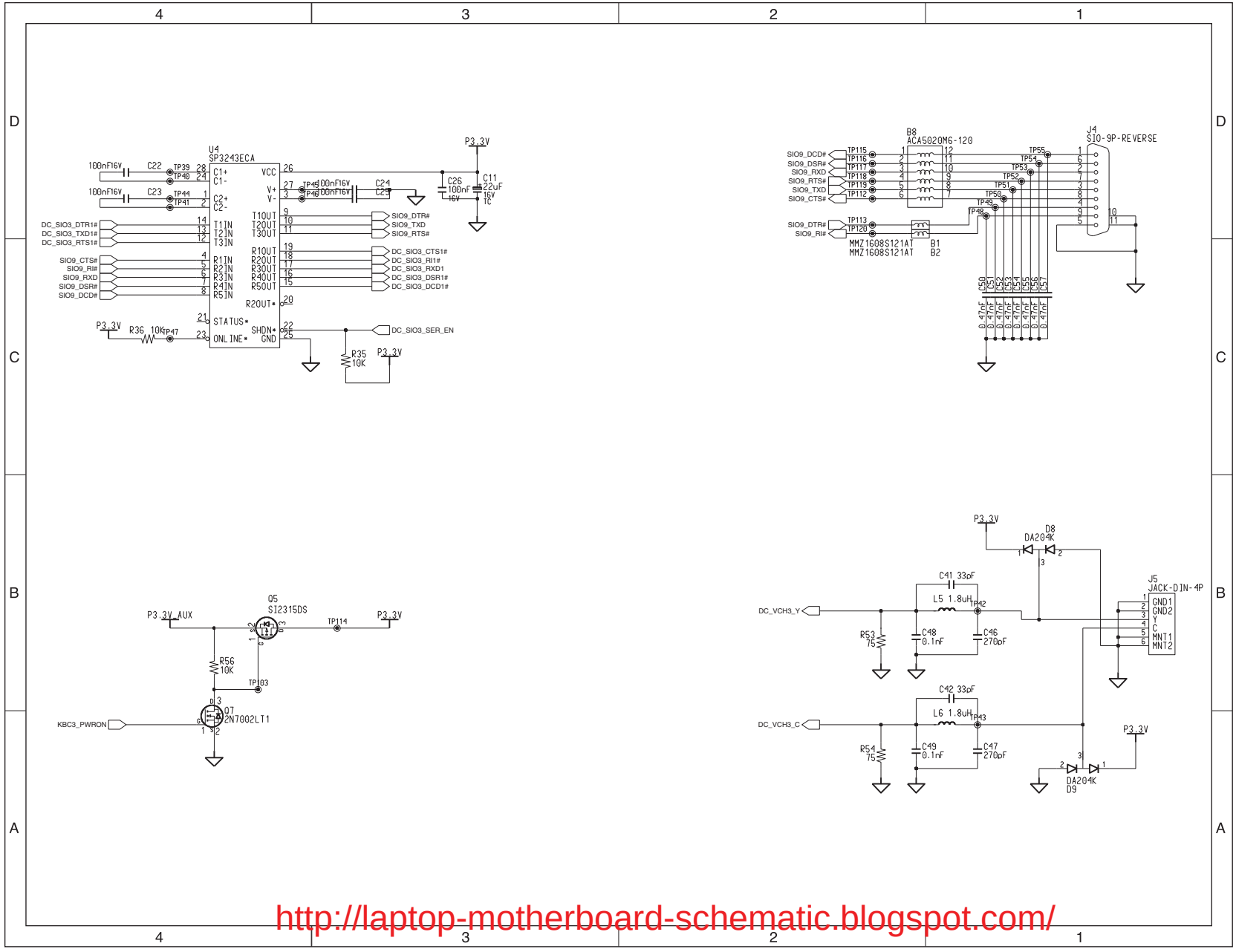

http://laptop-motherboard-schematic.blogspot.com/

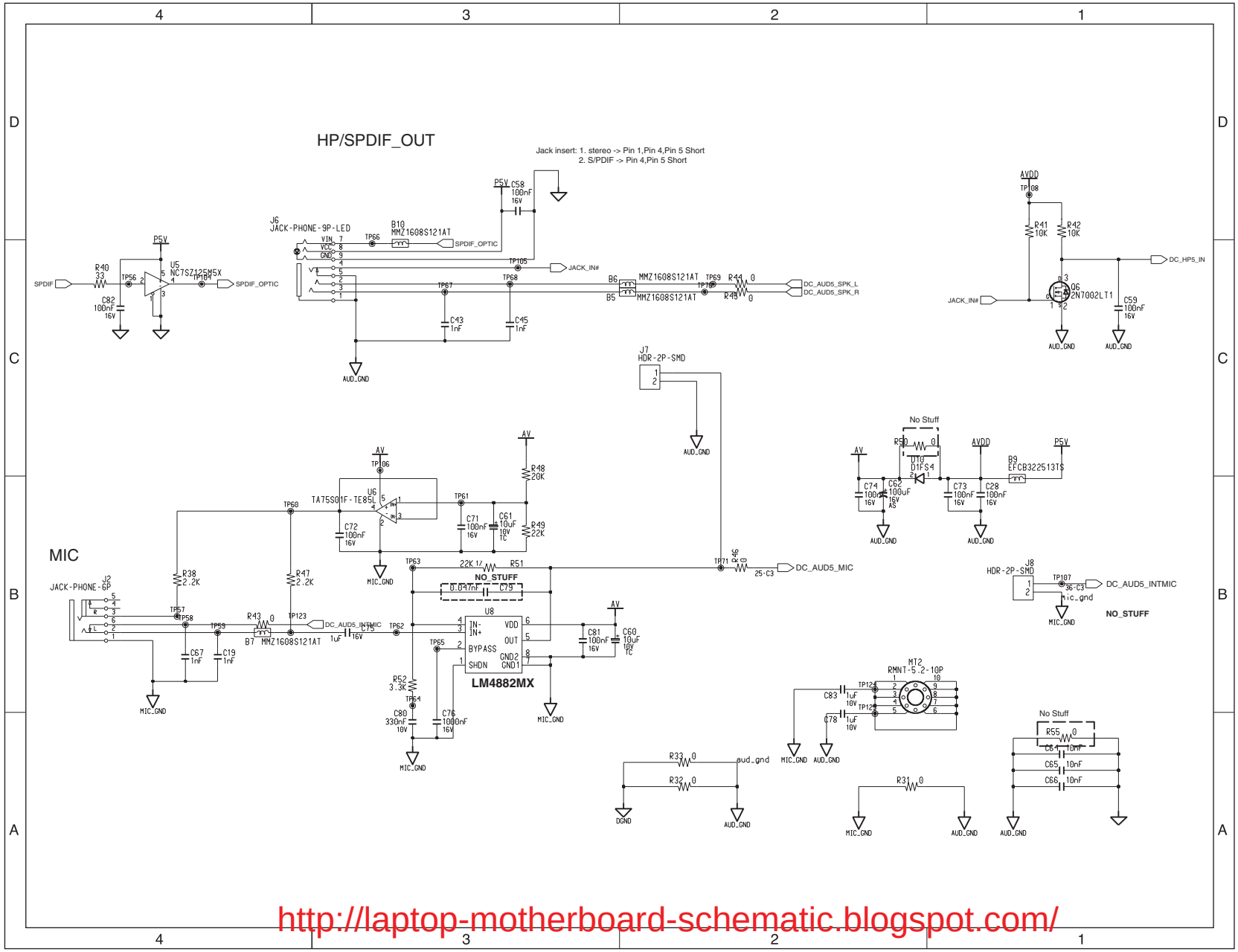
HP/SPDIF_OUT
Jack insert: 1. stereo -> Pin 1,Pin 4,Pin 5 Short
2. S/PDIF -> Pin 4,Pin 5 Short
MIC
LM4882MX
NO_STUFF
No Stuff
DC_AUD5_MIC
DC_AUD5_INTMIC
DC_HP5_IN
DC_AUD5_SPK_L
DC_AUD5_SPK_R
SPDIF_OPTIC
JACK_IN#
AUD_GND
MIC_GND
http://laptop-motherboard-schematic.blogspot.com/

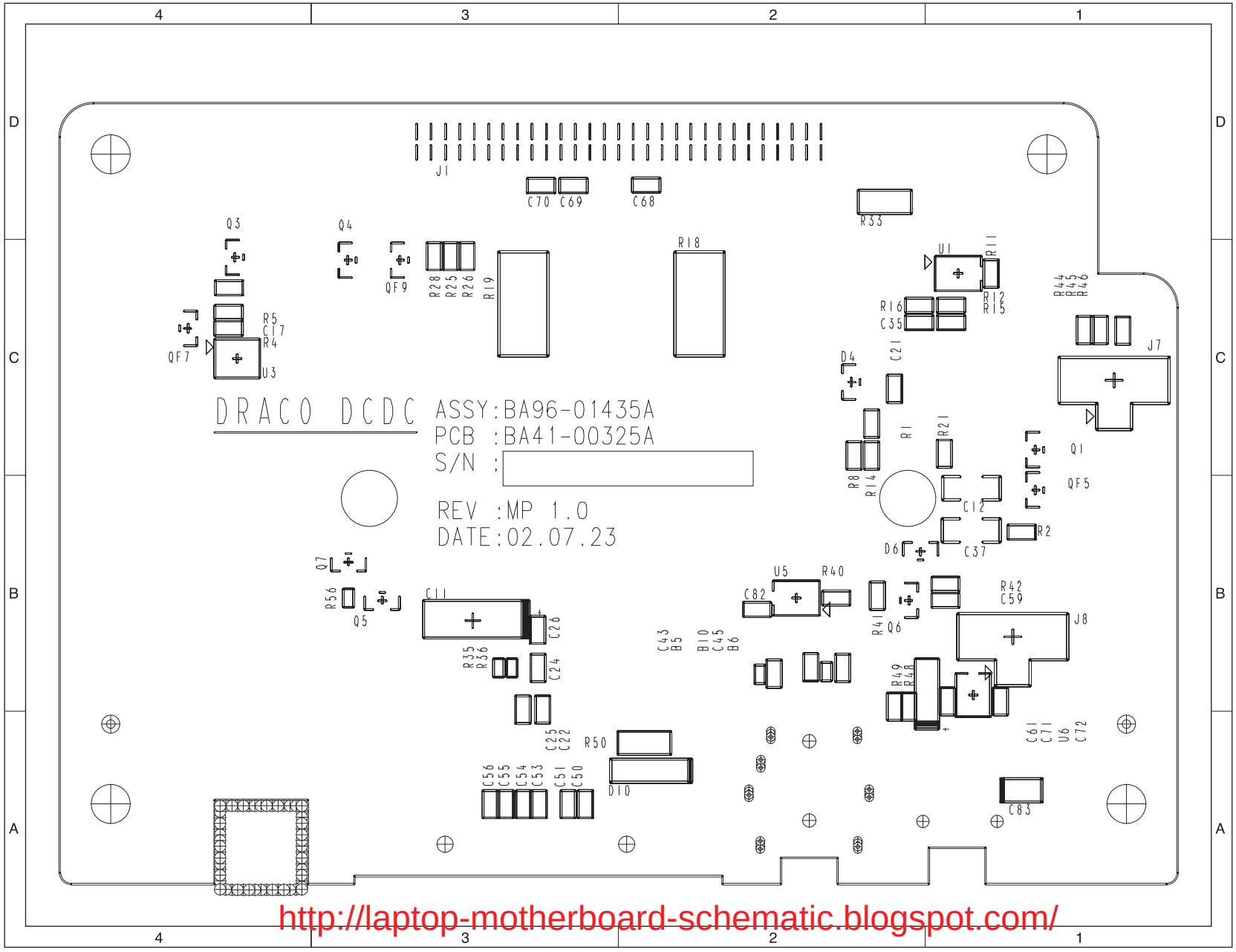

http://laptop-motherboard-schematic.blogspot.com/

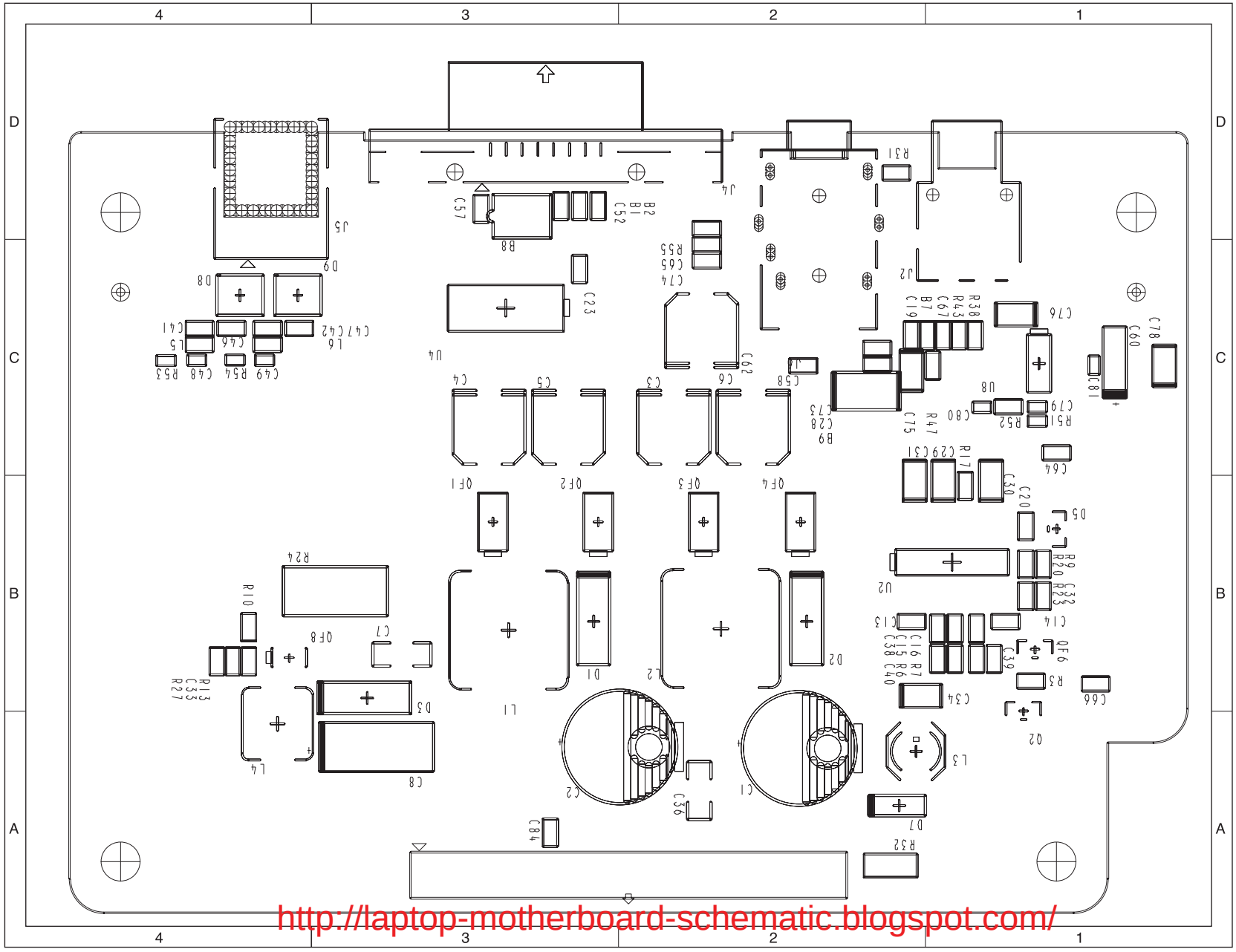

http://laptop-motherboard-schematic.blogspot.com/