SAMSUNG PROPRIETARY
THIS DOCUMENT CONTAINS CONFIDENTIAL PROPRIETARY INFORMATION THAT IS SAMSUNG ELECTRONICS CO'S PROPERTY. DO NOT DISCLOSE TO OR DUPLICATE FOR OTHERS EXCEPT AS AUTHORIZED BY SAMSUNG.

Tianjin

CPU : Intel Penryn-6M (1067/800) MHz
Chip Set : Intel Cantiga & ICH9M
Remarks : Montevina Platform

Model Name : TIANJIN_EXT
PBA Name : MAIN
PCB Code : BA41-00897A/898A
Dev. Step : PR
Revision : 1.0
T.R. Date : 2008.06.03

Design	CHECK	APPROVAL
XIAOHONG ZHANG	RUJIN ZHENG	BC LEE

■ *Owner : SESC Mobile R & D* *Signature :* *X*

BLOCK DESIGN

Samsung Confidential

DRAW XIAOHONG ZHANG	DATE 06/03/2008	TITLE TianJin_EXT MAIN COVER	SAMSUNG ELECTRONICS
CHECK RUJIN ZHENG	DEV. STEP PR		PART NO. BA41-00897A/898A
APPROVAL BC LEE	REV REV 1.0		
MODULE CODE	LAST EDIT June 03, 2008 11:43:58 AM	PAGE 1 OF 17	

http://hobi-elektronika.net

SAMSUNG PROPRIETARY
THIS DOCUMENT CONTAINS CONFIDENTIAL PROPRIETARY INFORMATION THAT IS SAMSUNG ELECTRONICS CO'S PROPERTY. DO NOT DISCLOSE TO OR DUPLICATE FOR OTHERS EXCEPT AS AUTHORIZED BY SAMSUNG.

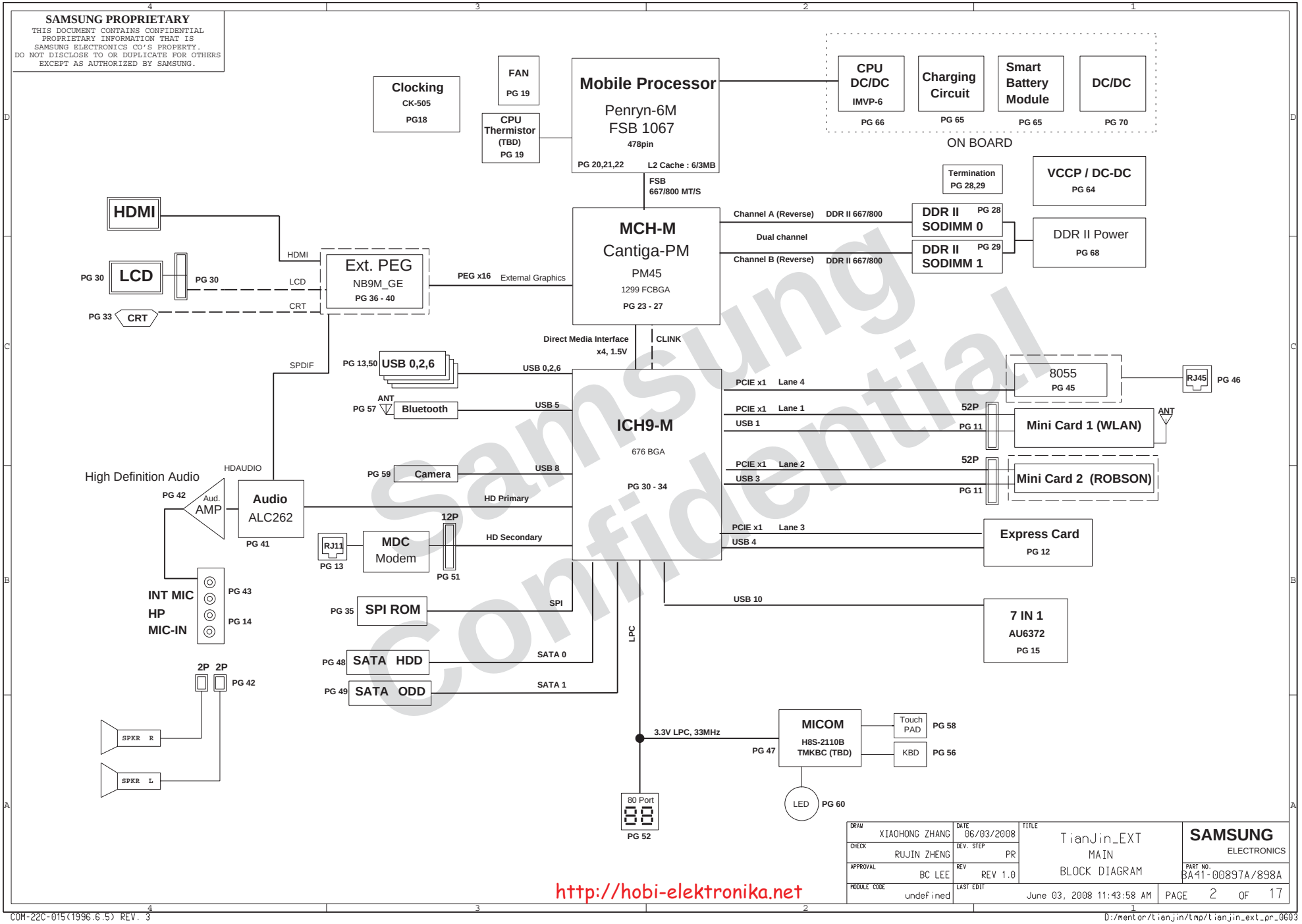

Samsung Confidential

http://hobi-elektronika.net

SAMSUNG PROPRIETARY
THIS DOCUMENT CONTAINS CONFIDENTIAL
PROPRIETARY INFORMATION THAT IS
SAMSUNG ELECTRONICS CO'S PROPERTY.
DO NOT DISCLOSE TO OR DUPLICATE FOR OTHERS
EXCEPT AS AUTHORIZED BY SAMSUNG.

BOARD INFORMATION

SCHEMATIC ANNOTATIONS AND BOARD INFORMATION

Voltage Rails

VDC	Primary DC system power supply (7 to 21V)
CPU_CORE	Core Voltage for CPU
EGFX_CORE	Core Voltage for GPU
P1.05V	VTT for CPU, Cantiga & ICH9-M
P1.1	VTT for NB9M_GE
P3.3V_MICOM	3.3V always power rail (for Micom)
P1.5V	1.5V switched power rail (off in S3-S5)
P1.8V	1.8V switched power rail (off in S3-S5)
P1.8V_AUX	1.8V power rail for DDR (off in S4-S5)
P0.9V	0.9V power rail for DDR (off in S3-S5)
P3.3V	3.3V switched power rail (off in S3-S5)
P3.3V_AUX	3.3V switched on power rail (off in S4-S5)
P5.0V	5.0V switched power rail (off in S3-S5)
P5.0V_AUX	5.0V switched on power rail (off in S4-S5)
P5.0V_ALW	5.0V always power rail
P12.0V_ALW	12.0V always power rail

Crystal / Oscillator

TYPE	FREQUENCY	DEVICE	USAGE
Crystal	32.768KHz	ICH9-M	Real Time Clock
Crystal	10MHz	MICOM	HD64F2169/2160
Crystal	14.318MHz	CLOCK-Generator	CK-505
Crystal	25MHz	LAN	Intel LAN
Crystal	12M nostuff	R5U880	7 IN 1

I^2C / SMB Address

Devices	Address	Hex	Bus
ICH9-M	Master	-	SMBUS Master
CPU Thermal Sensor	0111 101x	7Ah	Thermal Sensor
SODIMM0	1010 000x	A0h	-
SODIMM1	1010 010x	A4h	-
Thermal Sensor on SODIMM0	0011 000x	30h	-
Thermal Sensor on SODIMM1	0011 010x	34h	-
CK-505M (Clock Generator)	1101 0010	D2h	Clock, Unused Clock Output Disable

USB PORT Assign

PORT #	ASSIGNED TO
0	SYSTEM PORT 0
1	Mini PCI Express 2
2	SYSTEM PORT 1
3	ROBSON
4	EXPRESS CARD
5	Bluetooth
6	SYSTEM PORT 2
7	NC
8	Camera
9	NC
10	7 IN 1

PCI Express Assign

PORT #	ASSIGNED TO
1	Mini Card 1 (WLAN)
2	Mini Card 2 (ROBSON)
3	EXPRESS CARD
4	LOM
5	NC
6	NC

LCD Pannel Detect (TBD)

Devices	Resolution	PANNEL_DETECT_0(strap0)

REVISION HISTORY

See rev notes for more information.

Samsung Confidential

http://hobi-elektronika.net

DRAW XIAOHONG ZHANG	DATE 06/03/2008	TITLE TianJin_EXT MAIN BOARD INFO	SAMSUNG ELECTRONICS
CHECK RUJIN ZHENG	DEV. STEP PR		
APPROVAL BC LEE	REV REV 1.0		PART NO. BA41-00897A/898A
MODULE CODE undefined	LAST EDIT June 03, 2008 11:43:58 AM		PAGE 3 OF 17

SAMSUNG PROPRIETARY
THIS DOCUMENT CONTAINS CONFIDENTIAL PROPRIETARY INFORMATION THAT IS SAMSUNG ELECTRONICS CO'S PROPERTY. DO NOT DISCLOSE TO OR DUPLICATE FOR OTHERS EXCEPT AS AUTHORIZED BY SAMSUNG.

POWER DIAGRAM

Rev 0.1

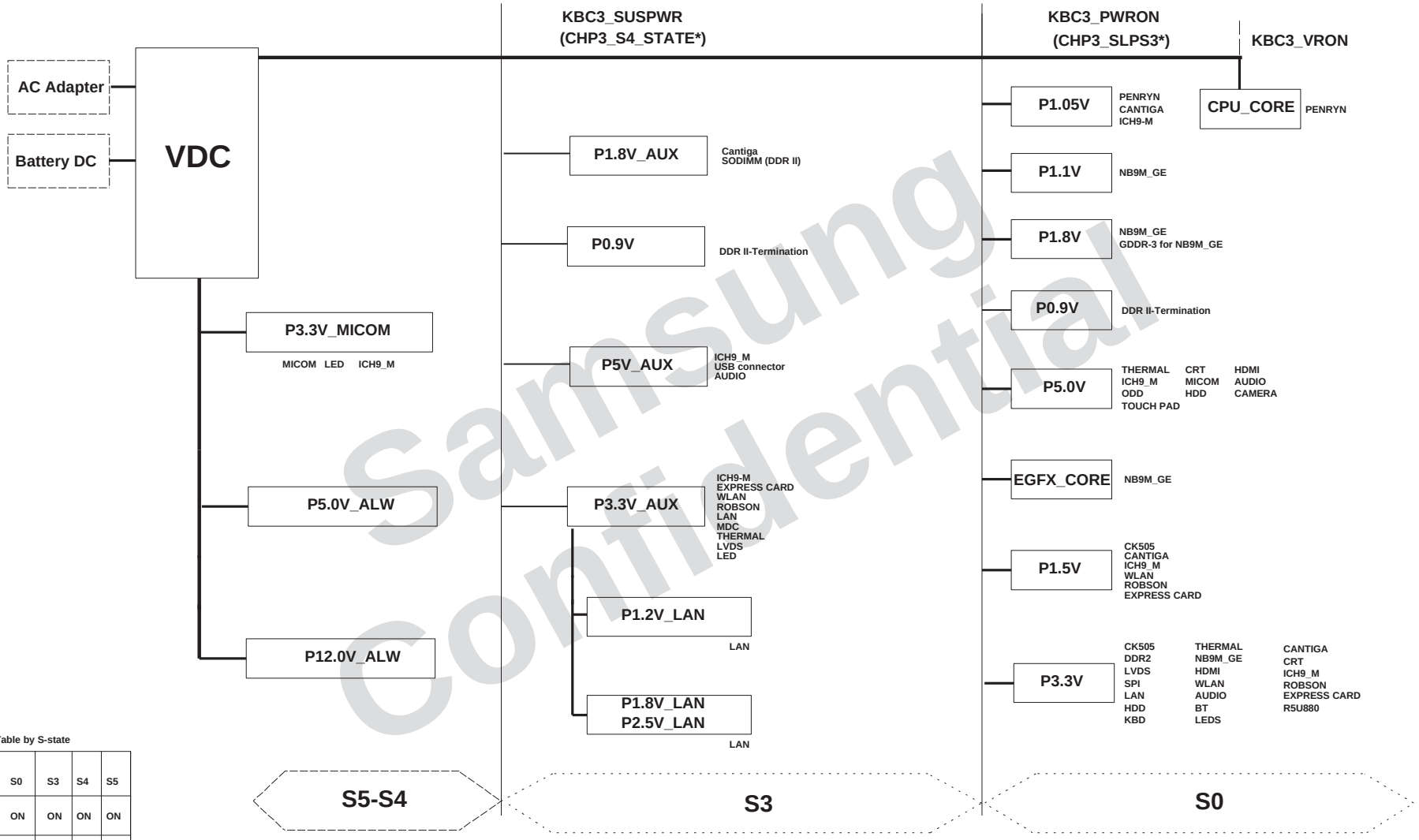

Samsung Confidential

Power On/Off Table by S-state

Rail / State	S0	S3	S4	S5
+V*A(LWS) +V*LAN	ON	ON	ON	ON
+1.8V_AUX +0.9V	ON	ON	—	—
+V*AUX	ON	ON	—	—
+V	ON	—	—	—
+V* (CORE)	ON	—	—	—

http://hobi-elektronika.net

DRAW: XIAOHONG ZHANG	DATE: 06/03/2008	TITLE: TianJin_EXT MAIN POWER DIAGRAM	SAMSUNG ELECTRONICS
CHECK: RUJIN ZHENG	DEV. STEP: PR		
APPROVAL: BC LEE	REV: REV 1.0		PART NO. BA41-00897A/898A
MODULE CODE: undefined	LAST EDIT: June 03, 2008 11:43:58 AM		PAGE 4 OF 17

SAMSUNG PROPRIETARY
THIS DOCUMENT CONTAINS CONFIDENTIAL PROPRIETARY INFORMATION THAT IS SAMSUNG ELECTRONICS CO'S PROPERTY. DO NOT DISCLOSE TO OR DUPLICATE FOR OTHERS EXCEPT AS AUTHORIZED BY SAMSUNG.

POWER RAILS ANALYSIS

Rev. 0.6 (060920)

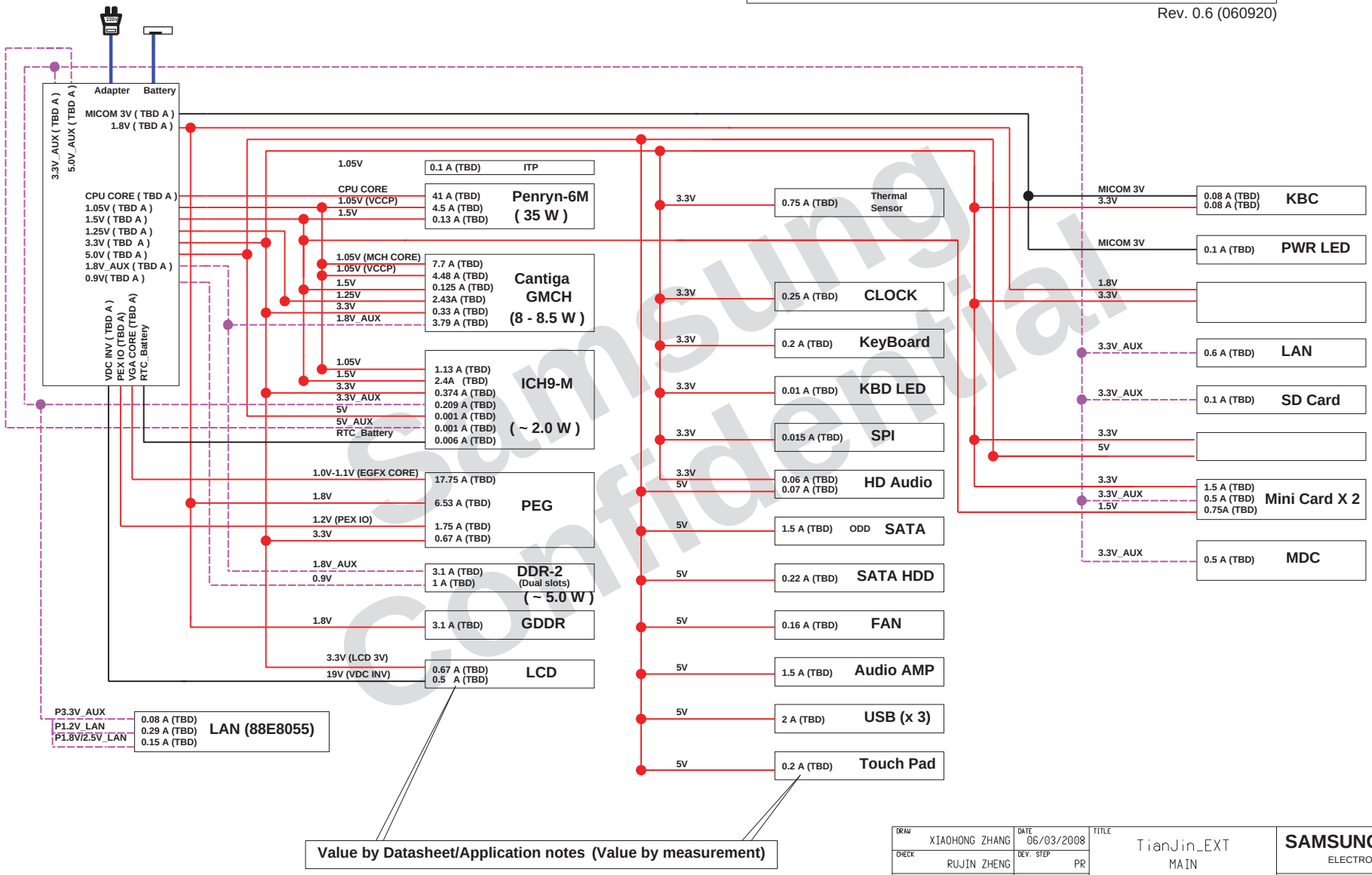

Value by Datasheet/Application notes (Value by measurement)

Samsung Confidential

http://hobi-elektronika.net

DRAW XIAOHONG ZHANG	DATE 06/03/2008	TITLE TianJin_EXT MAIN POWER RAILS	SAMSUNG ELECTRONICS
CHECK RUJIN ZHENG	DEV. STEP PR		
APPROVAL BC LEE	REV REV 1.0		PART NO. BA41-00897A/898A
MODULE CODE undefined	LAST EDIT June 03, 2008 11:43:58 AM		PAGE 5 OF 17

SAMSUNG PROPRIETARY
THIS DOCUMENT CONTAINS CONFIDENTIAL PROPRIETARY INFORMATION THAT IS SAMSUNG ELECTRONICS CO'S PROPERTY. DO NOT DISCLOSE TO OR DUPLICATE FOR OTHERS EXCEPT AS AUTHORIZED BY SAMSUNG.

POWER SEQUENCE

Rev. 0.7

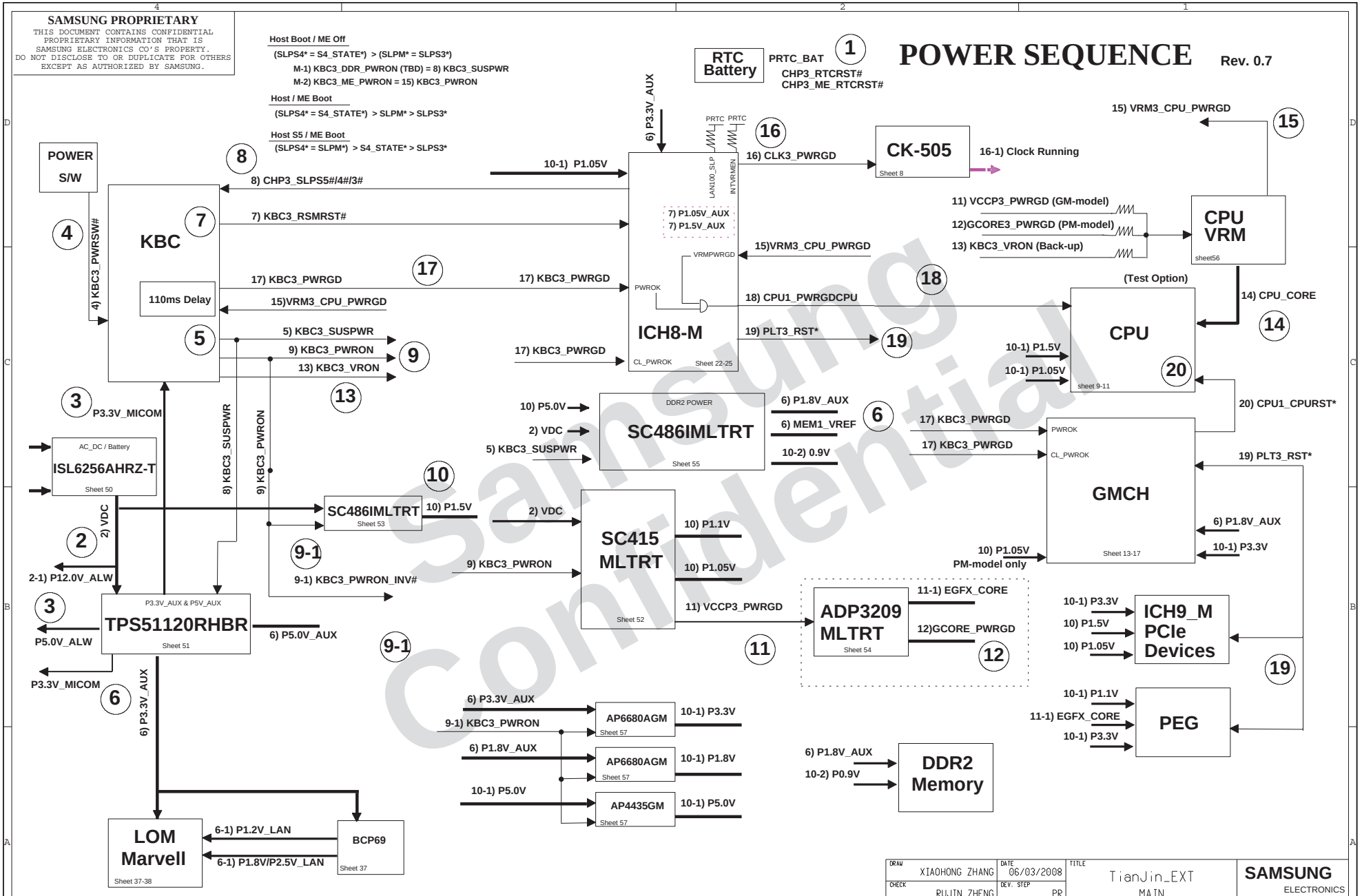

Samsung Confidential

http://hobi-elektronika.net

DRAW XIAOHONG ZHANG	DATE 06/03/2008	TITLE TianJin_EXT MAIN POWER SEQUENCE	SAMSUNG ELECTRONICS
CHECK RUJIN ZHENG	DEV. STEP PR		
APPROVAL BC LEE	REV REV 1.0		PART NO. BA41-00897A/898A
MODULE CODE undefined	LAST EDIT June 03, 2008 11:43:58 AM		PAGE 6 OF 17

SAMSUNG PROPRIETARY
THIS DOCUMENT CONTAINS CONFIDENTIAL PROPRIETARY INFORMATION THAT IS SAMSUNG ELECTRONICS CO'S PROPERTY. DO NOT DISCLOSE TO OR DUPLICATE FOR OTHERS EXCEPT AS AUTHORIZED BY SAMSUNG.

CLOCK DISTRIBUTION Rev. 0.1

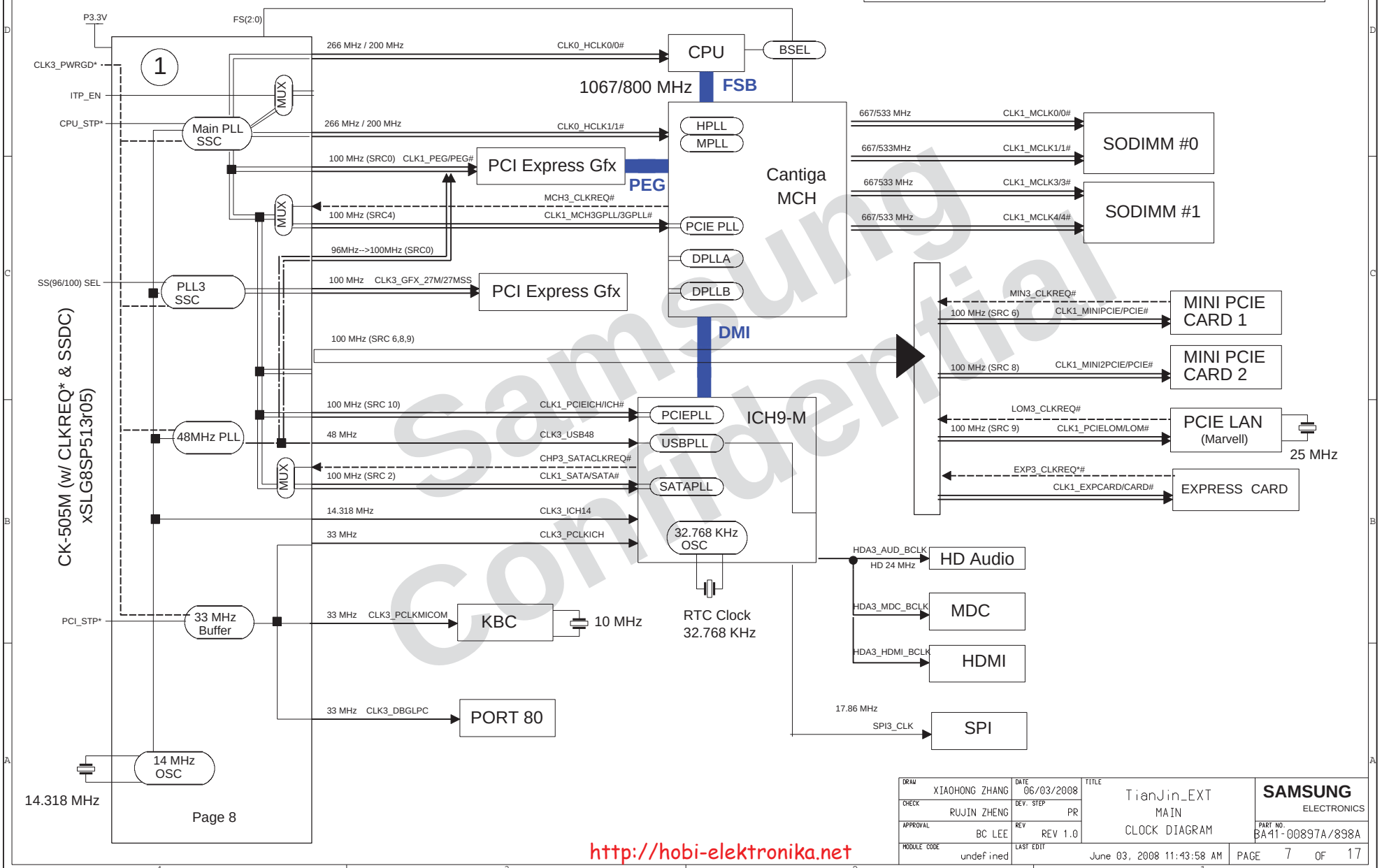

Samsung Confidential

http://hobi-elektronika.net

DRAW XIAOHONG ZHANG	DATE 06/03/2008	TITLE TianJin_EXT MAIN CLOCK DIAGRAM	SAMSUNG ELECTRONICS
CHECK RUJIN ZHENG	DEV. STEP PR		
APPROVAL BC LEE	REV REV 1.0		PART NO. BA41-00897A/898A
MODULE CODE undefined	LAST EDIT June 03, 2008 11:43:58 AM		PAGE 7 OF 17

SAMSUNG PROPRIETARY
THIS DOCUMENT CONTAINS CONFIDENTIAL
PROPRIETARY INFORMATION THAT IS
SAMSUNG ELECTRONICS CO'S PROPERTY.
DO NOT DISCLOSE TO OR DUPLICATE FOR OTHERS
EXCEPT AS AUTHORIZED BY SAMSUNG.

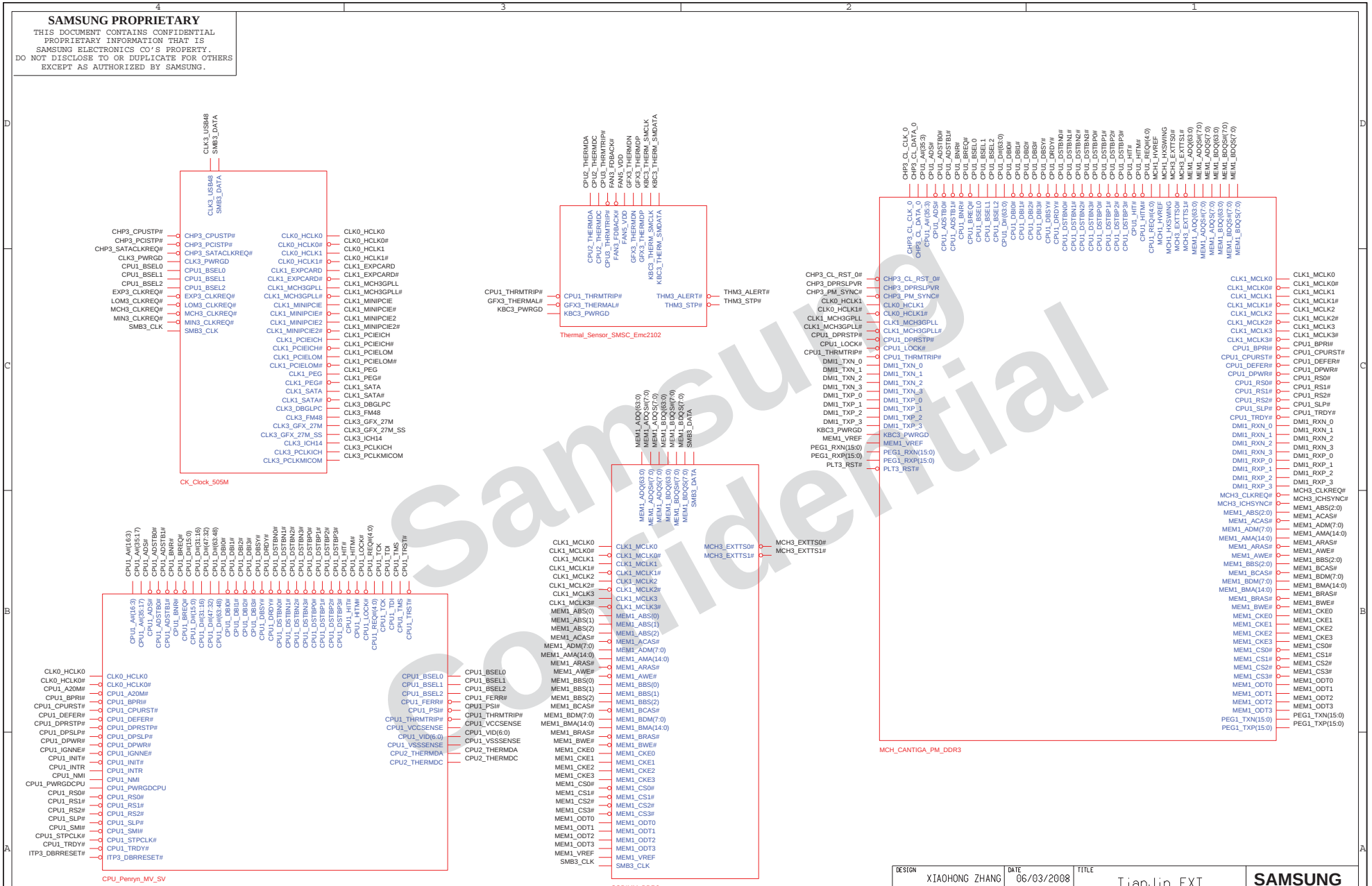

Samsung Confidential

http://hobi-elektronika.net

DESIGN: XIAOHONG ZHANG	DATE: 06/03/2008	TITLE: TianJin_EXT MAIN BOARD BLOCK	SAMSUNG ELECTRONICS
CHECK: RUJIN ZHENG	DEV. STEP: PR		
APPROVAL: BC LEE	REV: REV 1.0		PART NO. BA41-00897A/898A
MODULE CODE	LAST EDIT: June 03, 2008 11:43:58 AM	PAGE 8 OF 17	

SAMSUNG PROPRIETARY
THIS DOCUMENT CONTAINS CONFIDENTIAL PROPRIETARY INFORMATION THAT IS SAMSUNG ELECTRONICS CO'S PROPERTY. DO NOT DISCLOSE TO OR DUPLICATE FOR OTHERS EXCEPT AS AUTHORIZED BY SAMSUNG.

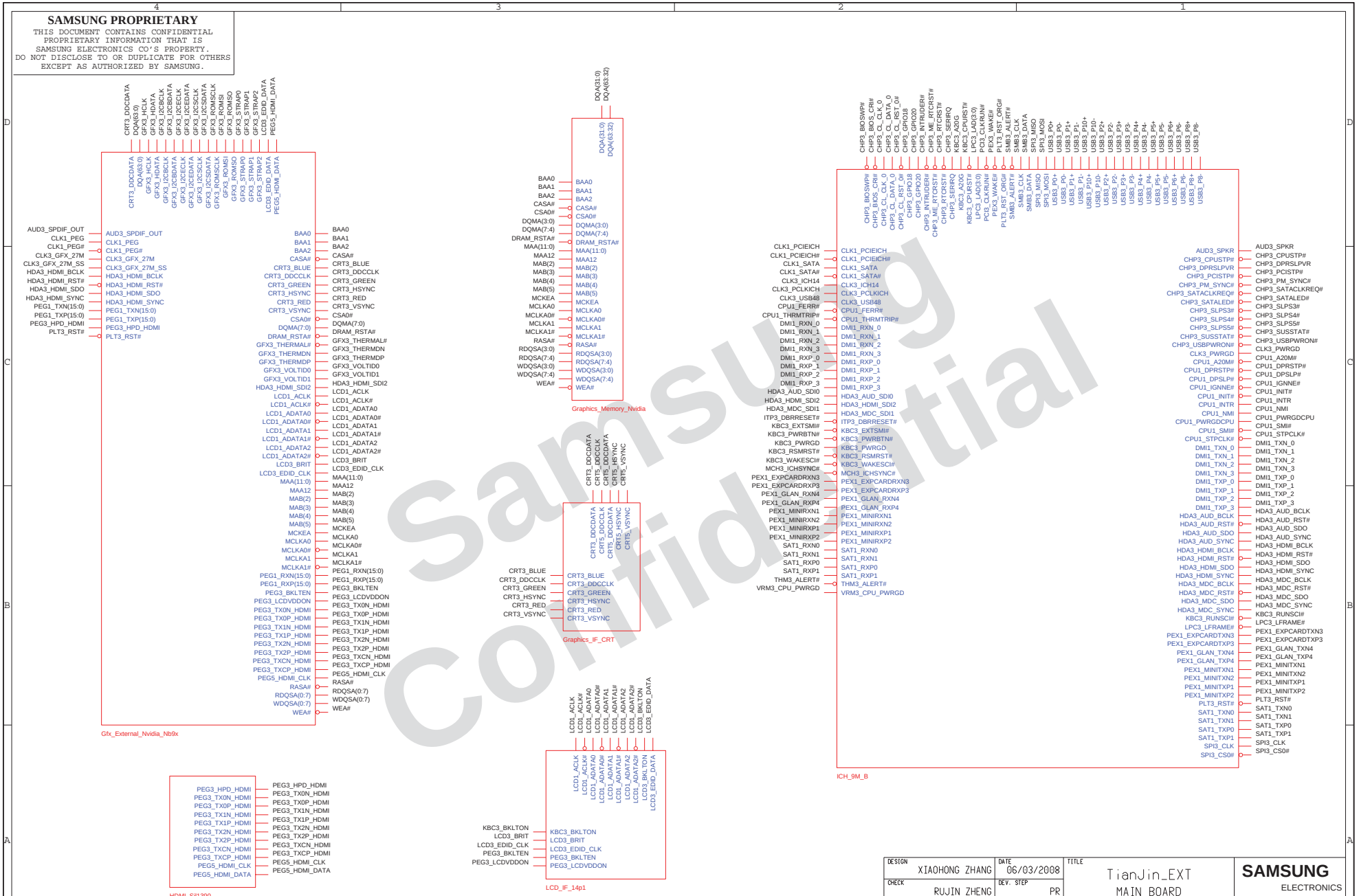

Samsung Confidential

http://hobi-elektronika.net

DESIGN: XIAOHONG ZHANG	DATE: 06/03/2008	TITLE: TianJin_EXT MAIN BOARD BLOCK	SAMSUNG ELECTRONICS
CHECK: RUJIN ZHENG	DEV. STEP: PR		
APPROVAL: BC LEE	REV: REV 1.0		PART NO. BA41-00897A/898A
MODULE CODE	LAST EDIT: June 03, 2008 11:43:58 AM		PAGE 9 OF 17

SAMSUNG PROPRIETARY
THIS DOCUMENT CONTAINS CONFIDENTIAL
PROPRIETARY INFORMATION THAT IS
SAMSUNG ELECTRONICS CO'S PROPERTY.
DO NOT DISCLOSE TO OR DUPLICATE FOR OTHERS
EXCEPT AS AUTHORIZED BY SAMSUNG.

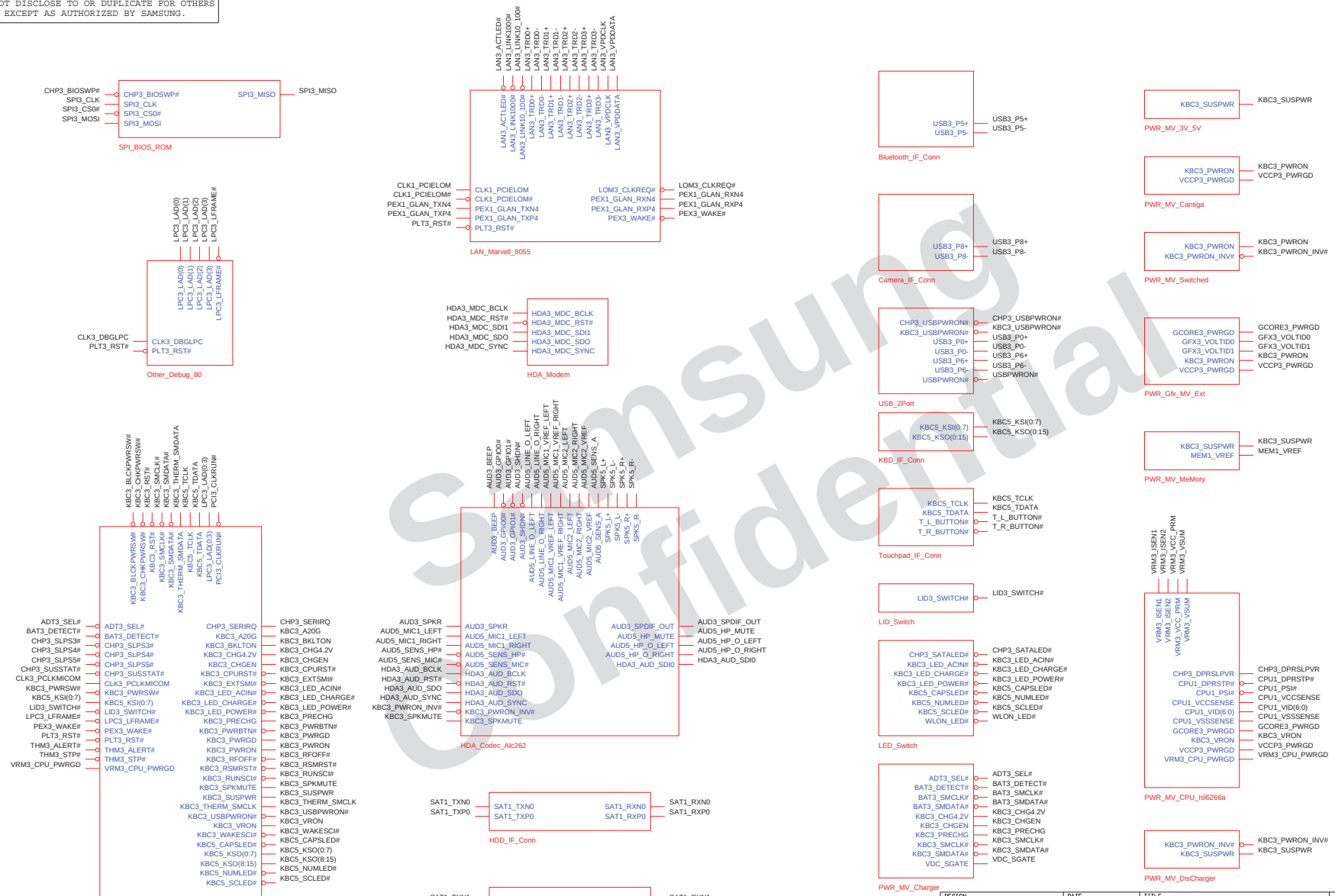

Samsung Confidential

http://hobi-elektronika.net

DESIGN: XIAOHONG ZHANG	DATE: 06/03/2008	TITLE: TianJin_EXT MAIN BOARD BLOCK	SAMSUNG ELECTRONICS
CHECK: RUJIN ZHENG	DEV. STEP: PR		
APPROVAL: BC LEE	REV: REV 1.0		PART NO. BA41-00897A/898A
MODULE CODE	LAST EDIT: June 03, 2008 11:43:58 AM		PAGE 10 OF 17

SAMSUNG PROPRIETARY
THIS DOCUMENT CONTAINS CONFIDENTIAL PROPRIETARY INFORMATION THAT IS SAMSUNG ELECTRONICS CO'S PROPERTY. DO NOT DISCLOSE TO OR DUPLICATE FOR OTHERS EXCEPT AS AUTHORIZED BY SAMSUNG.

WLAN, 7mm @ Upper side

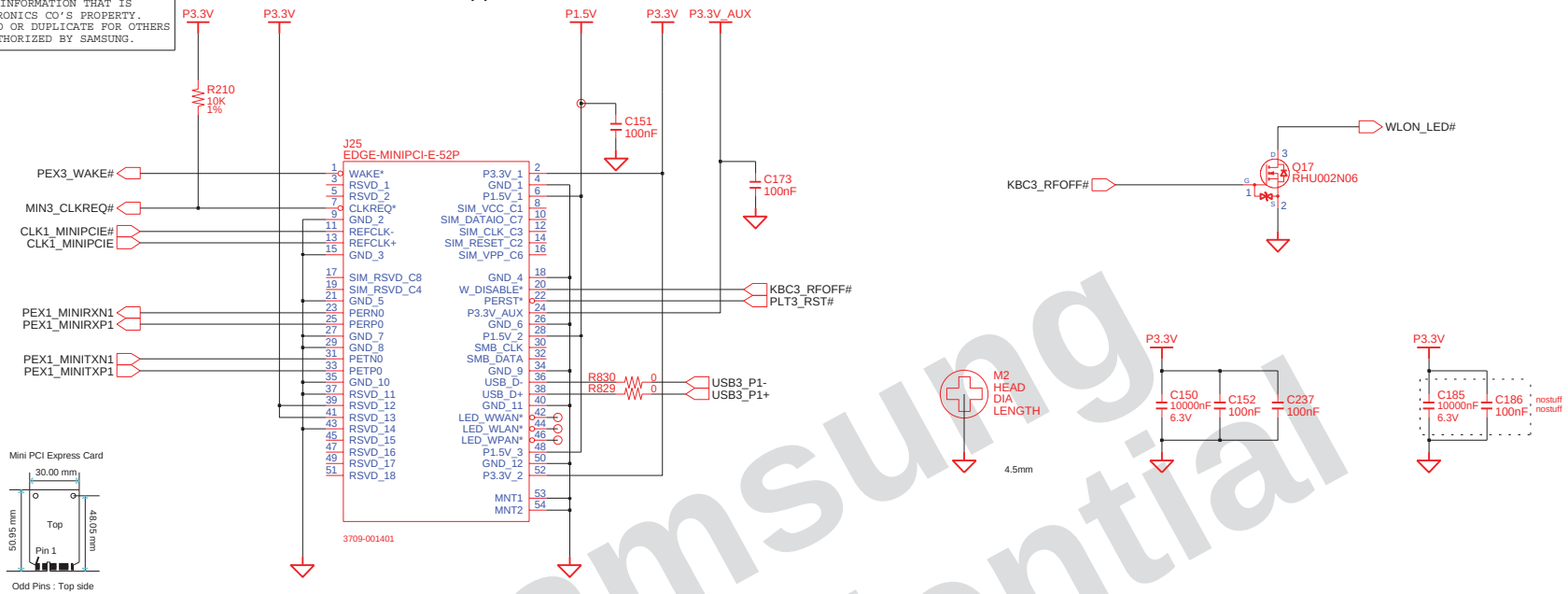

ROBSON

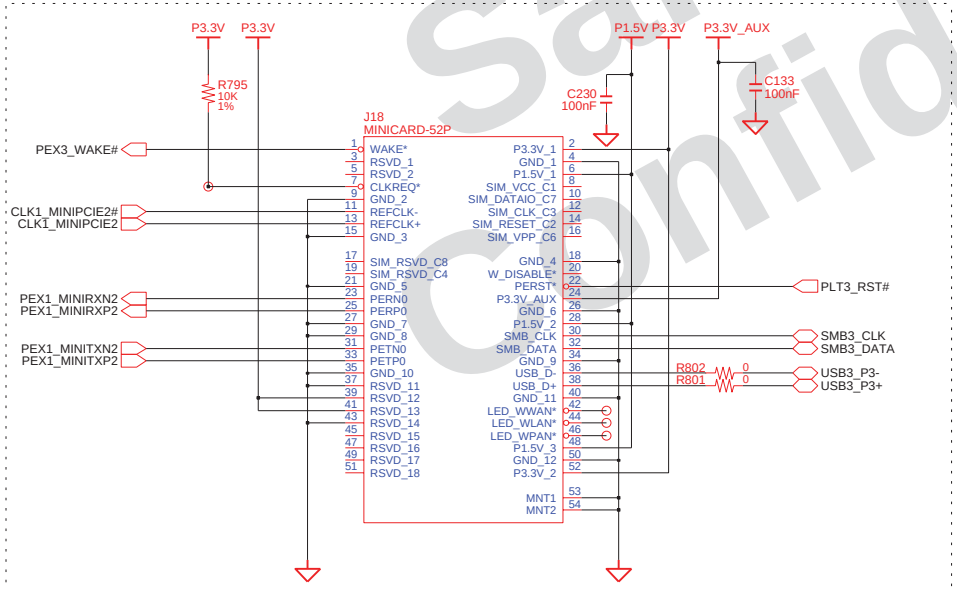

ROBSON, 4mm @ lower side

ROBSON

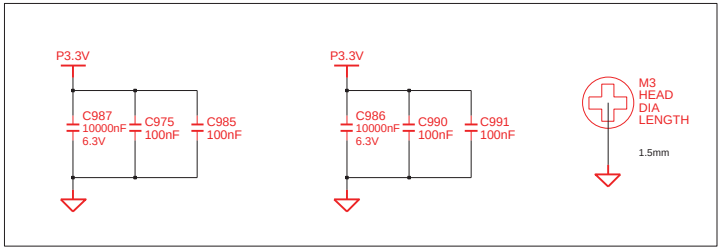

Samsung Confidential

http://hobi-elektronika.net

DESIGN: XIAOHONG ZHANG	DATE: 06/03/2008	TITLE: TianJin_EXT MAIN BOARD BLOCK	SAMSUNG ELECTRONICS
CHECK: RUJIN ZHENG	DEV. STEP: PR		
APPROVAL: BC LEE	REV: REV 1.0		PART NO. BA41-00897A/898A
MODULE CODE	LAST EDIT: June 03, 2008 11:43:58 AM		PAGE 11 OF 17

SAMSUNG PROPRIETARY
THIS DOCUMENT CONTAINS CONFIDENTIAL
PROPRIETARY INFORMATION THAT IS
SAMSUNG ELECTRONICS CO'S PROPERTY.
DO NOT DISCLOSE TO OR DUPLICATE FOR OTHERS
EXCEPT AS AUTHORIZED BY SAMSUNG.

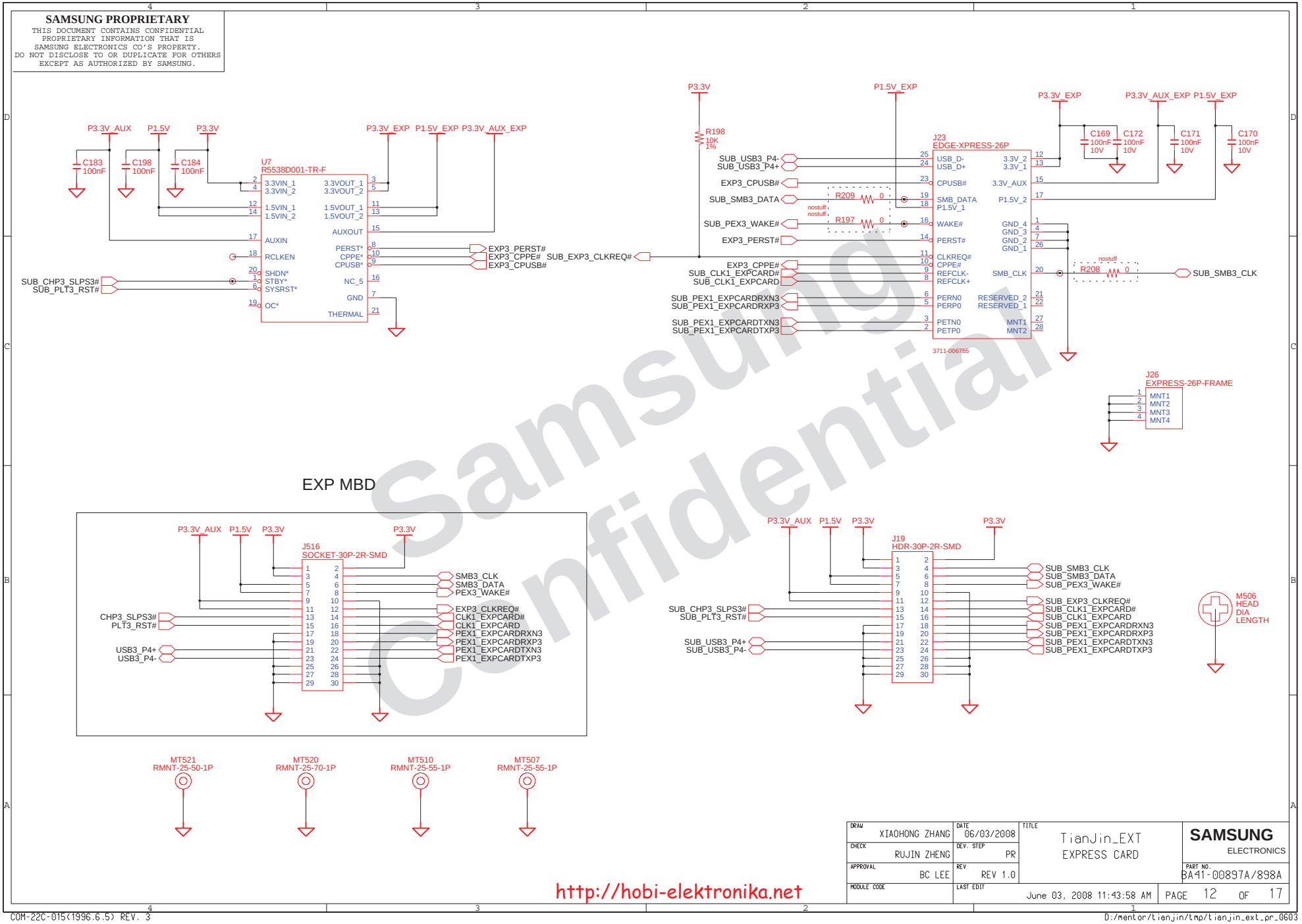

Samsung Confidential

http://hobi-elektronika.net

DRAW XIAOHONG ZHANG	DATE 06/03/2008	TITLE TianJin_EXT EXPRESS CARD	SAMSUNG ELECTRONICS
CHECK RUJIN ZHENG	DEV. STEP PR		
APPROVAL BC LEE	REV REV 1.0		PART NO. BA41-00897A/898A
MODULE CODE	LAST EDIT June 03, 2008 11:43:58 AM		PAGE 12 OF 17

SAMSUNG PROPRIETARY
THIS DOCUMENT CONTAINS CONFIDENTIAL PROPRIETARY INFORMATION THAT IS SAMSUNG ELECTRONICS CO'S PROPERTY. DO NOT DISCLOSE TO OR DUPLICATE FOR OTHERS EXCEPT AS AUTHORIZED BY SAMSUNG.

MDC

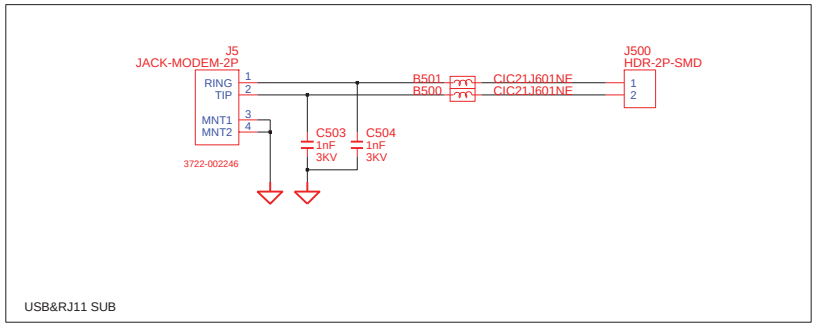

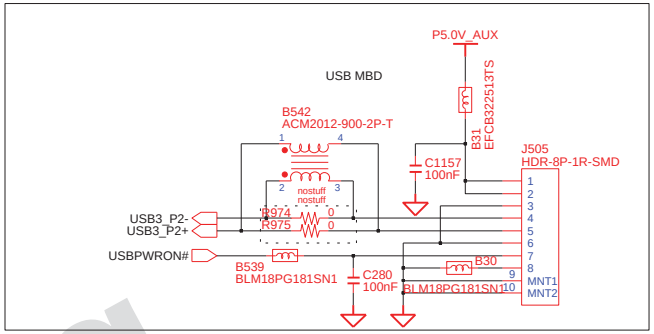

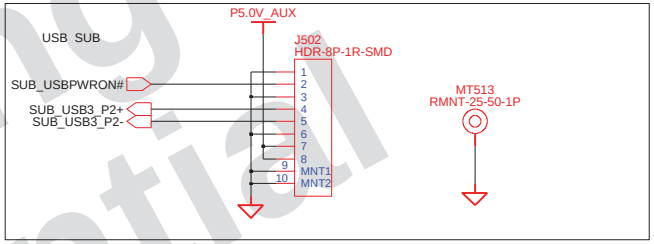

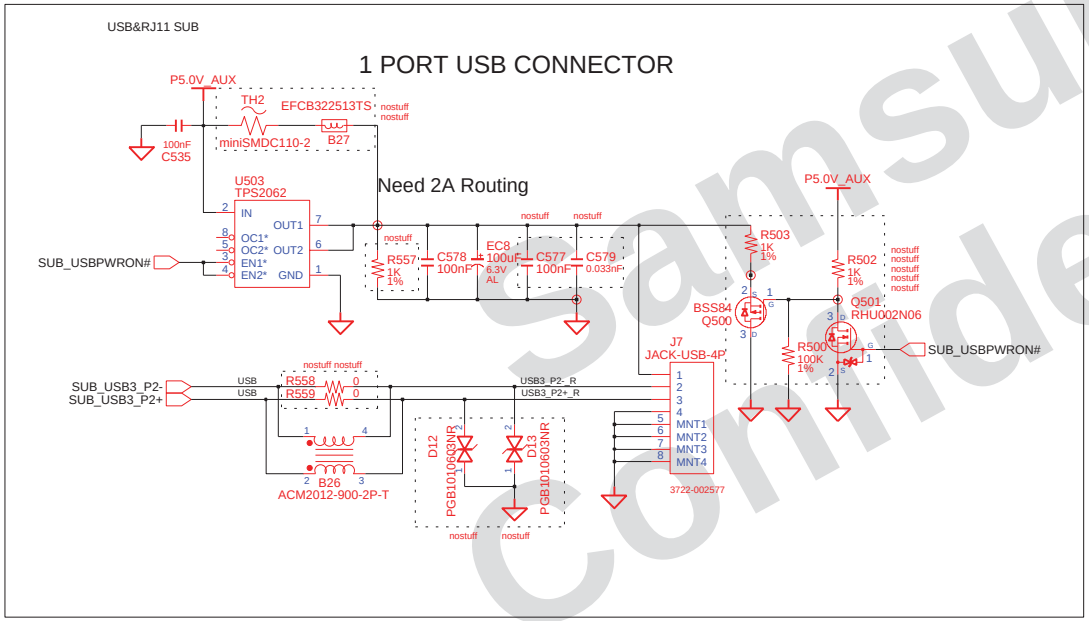

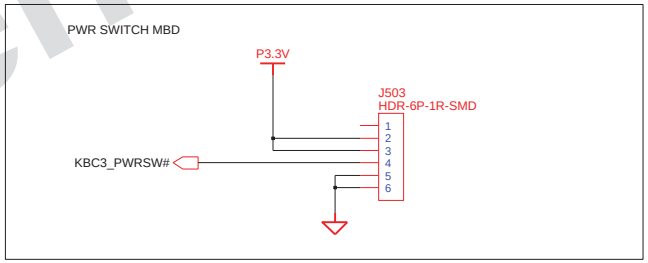

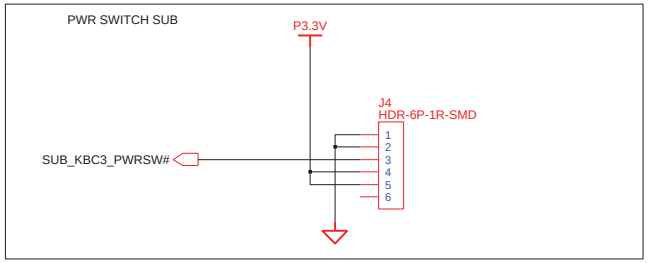

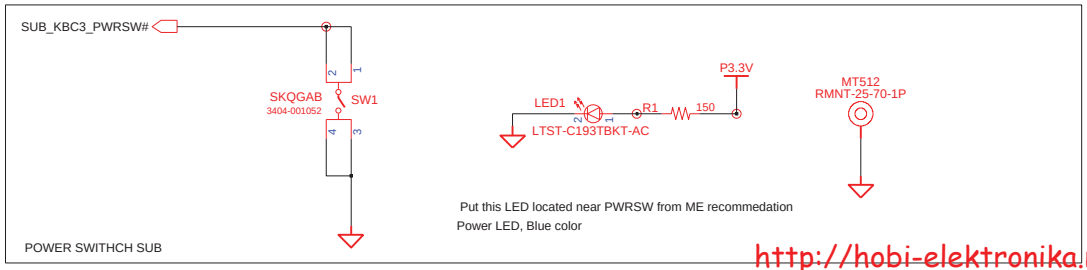

Samsung Confidential

http://hobi-elektronika.net

DRAW XIAOHONG ZHANG	DATE 06/03/2008	TITLE TianJin_EXT MDC & USB1 & PWRSW SUB	SAMSUNG ELECTRONICS
CHECK RUJIN ZHENG	DEV. STEP PR		
APPROVAL BC LEE	REV REV 1.0		PART NO. BA41-00897A/898A
MODULE CODE	LAST EDIT June 03, 2008 11:43:58 AM		PAGE 13 OF 17

SAMSUNG PROPRIETARY
THIS DOCUMENT CONTAINS CONFIDENTIAL
PROPRIETARY INFORMATION THAT IS
SAMSUNG ELECTRONICS CO'S PROPERTY.
DO NOT DISCLOSE TO OR DUPLICATE FOR OTHERS
EXCEPT AS AUTHORIZED BY SAMSUNG.

AUD_SUB

HEADPHONE

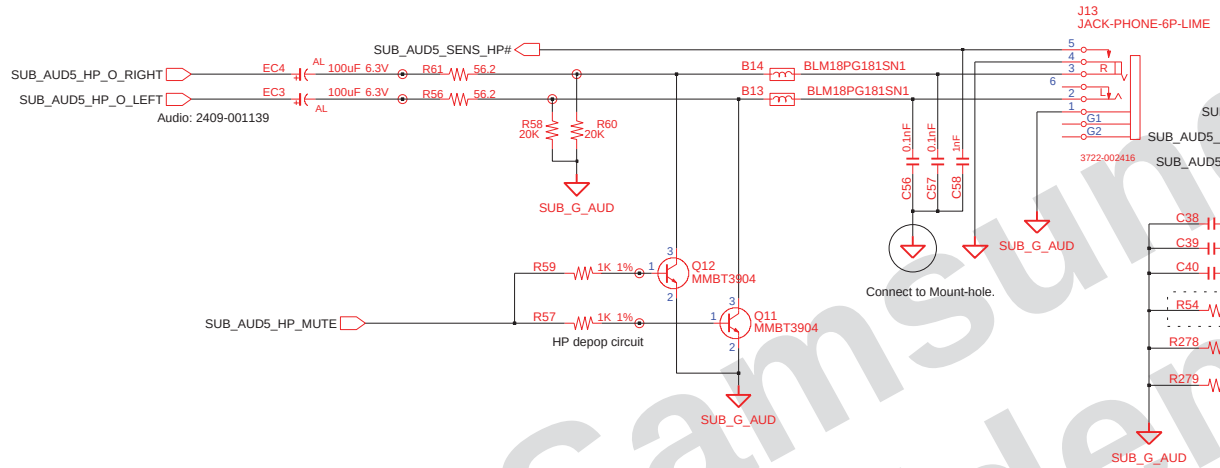

The traces led to Audio Jacks have the width over 10mil

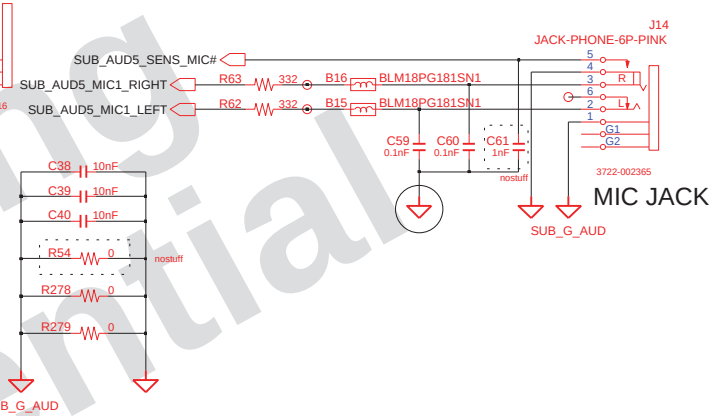

MIC JACK

AUD_SUB

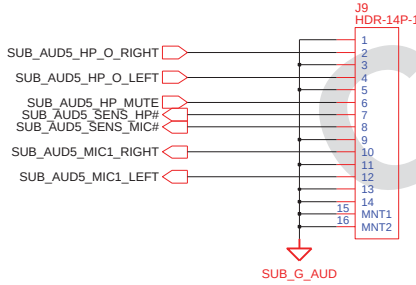

AUD_MBD

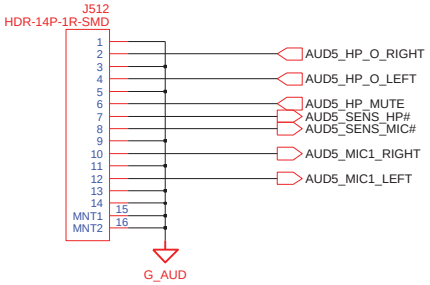

Samsung Confidential

DRAW XIAOHONG ZHANG	DATE 06/03/2008	TITLE TianJin_EXT AUDIO	SAMSUNG ELECTRONICS
CHECK RUJIN ZHENG	DEV. STEP PR		
APPROVAL BC LEE	REV REV 1.0		PART NO. BA41-00897A/898A
MODULE CODE	LAST EDIT June 03, 2008 11:43:58 AM	PAGE 14 OF 17	

http://hobi-elektronika.net

SAMSUNG PROPRIETARY
THIS DOCUMENT CONTAINS CONFIDENTIAL
PROPRIETARY INFORMATION THAT IS
SAMSUNG ELECTRONICS CO'S PROPERTY.
DO NOT DISCLOSE TO OR DUPLICATE FOR OTHERS
EXCEPT AS AUTHORIZED BY SAMSUNG.

P3.3V_MCD distance between R5U880 and socket should be less than 2 inches

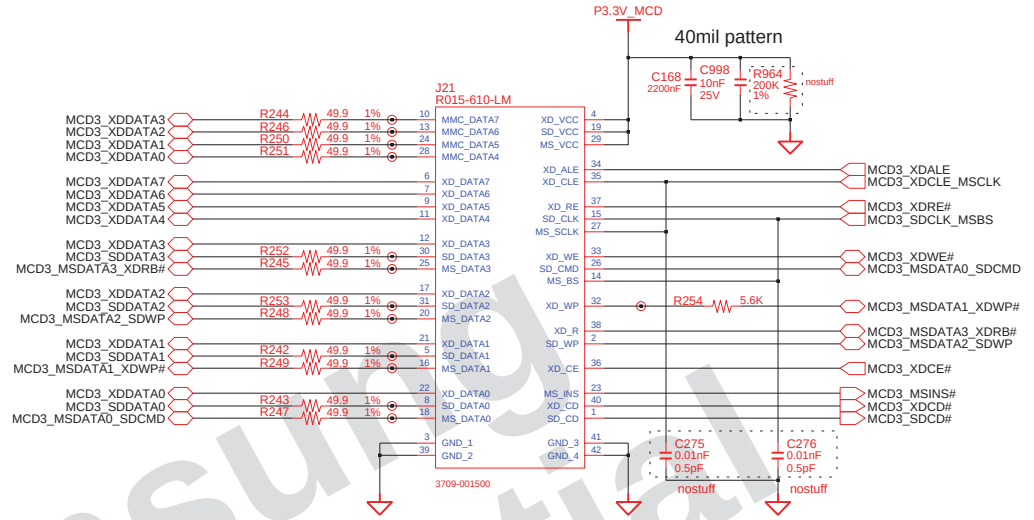

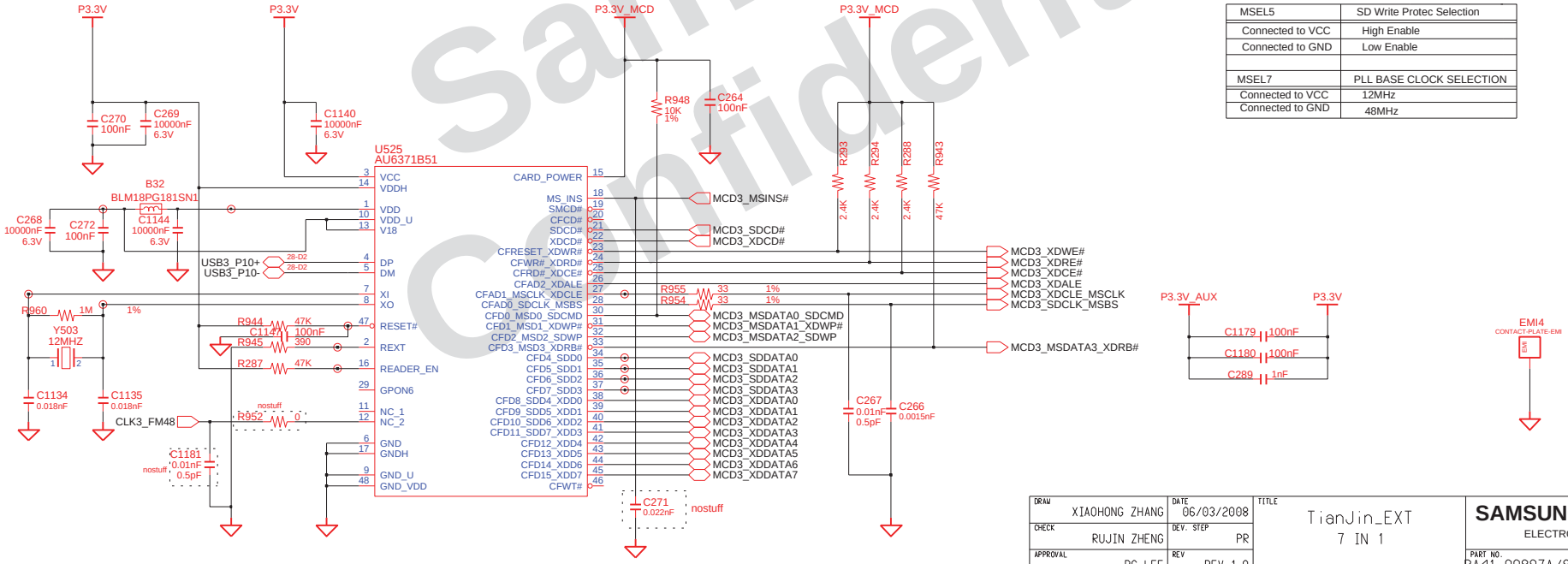

MSEL5	SD Write Protec Selection
Connected to VCC	High Enable
Connected to GND	Low Enable
MSEL7	PLL BASE CLOCK SELECTION
Connected to VCC	12MHz
Connected to GND	48MHz

Samsung Confidential

http://hobi-elektronika.net

DRAW XIAOHONG ZHANG	DATE 06/03/2008	TITLE TianJin_EXT 7 IN 1	SAMSUNG ELECTRONICS
CHECK RUJIN ZHENG	DEV. STEP PR		
APPROVAL BC LEE	REV REV 1.0		PART NO. BA41-00897A/898A
MODULE CODE	LAST EDIT June 03, 2008 11:43:58 AM		PAGE 15 OF 17

SAMSUNG PROPRIETARY
THIS DOCUMENT CONTAINS CONFIDENTIAL
PROPRIETARY INFORMATION THAT IS
SAMSUNG ELECTRONICS CO'S PROPERTY.
DO NOT DISCLOSE TO OR DUPLICATE FOR OTHERS
EXCEPT AS AUTHORIZED BY SAMSUNG.

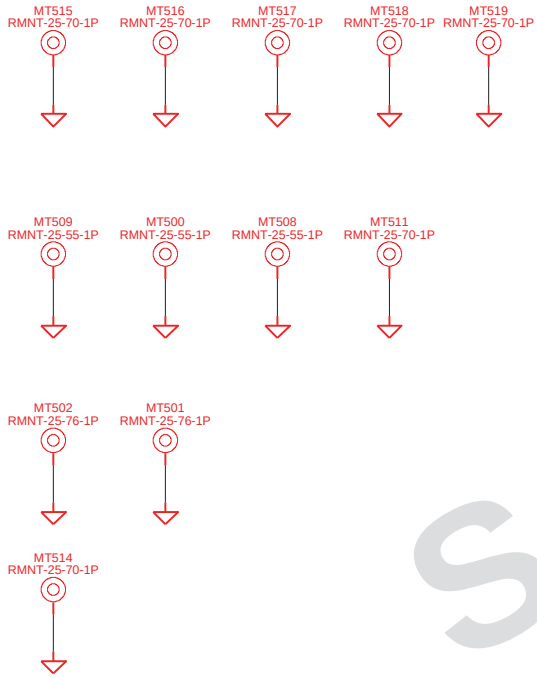

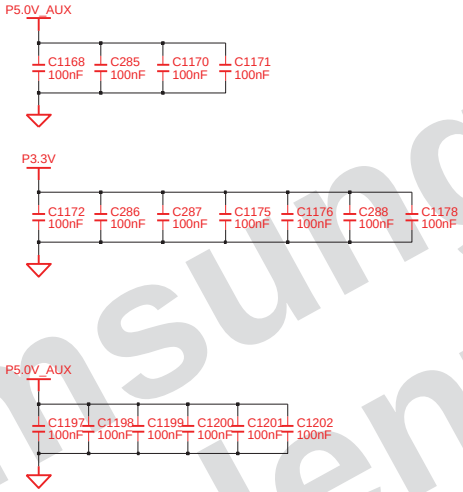

PCB REVISION CONTROL (ICT)				
NO	CONNECTION	DATE(YY/MM/DD)	REVISION	STEP
1	N.C.			
2	1-2			
3	2-3			
4	3-1			
5	1-2-3			
6	N.C.			
7	1-2			
8	2-3			
9	3-1			
10	1-2-3			

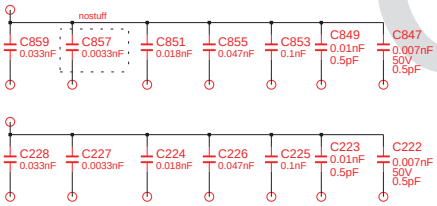

Samsung Confidential

http://hobi-elektronika.net

DRAW XIAOHONG ZHANG	DATE 06/03/2008	TITLE TianJin_EXT ICT	SAMSUNG ELECTRONICS
CHECK RUJIN ZHENG	DEV. STEP PR		
APPROVAL BC LEE	REV REV 1.0		PART NO. BA41-00897A/898A
MODULE CODE	LAST EDIT June 03, 2008 11:43:58 AM	PAGE 16 OF 17	

SAMSUNG PROPRIETARY
THIS DOCUMENT CONTAINS CONFIDENTIAL
PROPRIETARY INFORMATION THAT IS
SAMSUNG ELECTRONICS CO'S PROPERTY.
DO NOT DISCLOSE TO OR DUPLICATE FOR OTHERS
EXCEPT AS AUTHORIZED BY SAMSUNG.

TP19744 ADT3_SEL#
TP19745 AUD3_BEEP
TP19746 AUD3_GPIO0#
TP19747 AUD3_GPIO1#
TP19748 AUD3_SHDN#
TP19749 AUD3_SPDIF_OUT
TP19750 AUD3_SPKR
TP19751 AUD5_HP_MUTE
TP19752 AUD5_HP_O_LEFT
TP19753 AUD5_HP_O_RIGHT
TP19754 AUD5_LINE_O_LEFT
TP19755 AUD5_LINE_O_RIGHT
TP19756 AUD5_MIC1_LEFT
TP19757 AUD5_MIC1_RIGHT
TP19758 AUD5_MIC1_VREF_LEFT
TP19759 AUD5_MIC1_VREF_RIGHT
TP19760 AUD5_MIC2_LEFT
TP19761 AUD5_MIC2_RIGHT
TP19762 AUD5_MIC2_VREF
TP19763 AUD5_SENS_A
TP19764 AUD5_SENS_HP#
TP19765 AUD5_SENS_MIC#
TP19766 BAT3_DETECT#
TP19767 BAT3_SMCLK#
TP19768 BAT3_SMDATA#
TP19769 CASA#
TP19770 CHP3_BIOSWP#
TP19771 CHP3_BIOS_CR#
TP19772 CHP3_CL_CLK_0
TP19724 CHP3_CL_DATA_0
TP19725 CHP3_CL_RST_0#
TP19726 CHP3_CPUSTP#
TP19727 CHP3_DPRSLPVR
TP19728 CHP3_GPIO18
TP19729 CHP3_GPIO20
TP19730 CHP3_INTRUDER#
TP19731 CHP3_ME_RTCRST#
TP19732 CHP3_PCISTP#
TP19733 CHP3_PM_SYNC#

TP19736 CHP3_SATACLKREQ#
TP19737 CHP3_SATALED#
TP19738 CHP3_SERIRQ
TP19739 CHP3_SLPS3#
TP19740 CHP3_SLPS4#
TP19741 CHP3_SLPS5#
TP19742 CHP3_SUSSTAT#
TP19743 CHP3_USBPWRON#
TP19714 CLK3_DBGLPC
TP19715 CLK3_FM48
TP19716 CLK3_GFX_27M
TP19717 CLK3_GFX_27M_SS
TP19718 CLK3_ICH14
TP19719 CLK3_PCLKICH
TP19720 CLK3_PCLKMICOM
TP19721 CLK3_USB48

TP19702 CPU1_VCCSENSE
TP19703 CPU1_VID(0)
TP19704 CPU1_VID(1)
TP19705 CPU1_VID(2)
TP19706 CPU1_VID(3)
TP19707 CPU1_VID(4)
TP19708 CPU1_VID(5)
TP19709 CPU1_VID(6)
TP19710 CPU1_VSSSENSE
TP19711 CPU2_THERMDA
TP19712 CPU2_THERMDC
TP19713 CPU3_THRMTRIP#
TP19773 EXP3_CLKREQ#
TP19774_SUB EXP3_CPPE#
TP19775_SUB EXP3_CPUSB#
TP19776_SUB EXP3_PERST#
TP19777 FAN3_FDBACK#
TP19778 FAN5_VDD
TP19779 GCORE3_PWRGD
TP19697 EXP3_CLKREQ#
TP19698_SUB EXP3_CPPE#
TP19699_SUB EXP3_CPUSB#
TP19700_SUB EXP3_PERST#

TP19701 FAN3_FDBACK#
TP19665 FAN5_VDD
TP19666 GCORE3_PWRGD
TP19667 GFX3_HCLK
TP19668 GFX3_HDATA

TP19673 GFX3_I2CSCLK
TP19674 GFX3_I2CSDATA
TP19675 GFX3_ROMSCLK
TP19676 GFX3_ROMSI
TP19677 GFX3_ROMSO
TP19678 GFX3_STRAP0

TP19680 GFX3_STRAP2
TP19681 GFX3_THERMAL#
TP19682 GFX3_THERMDN
TP19683 GFX3_THERMDP
TP19684 GFX3_VOLTID0
TP19685 GFX3_VOLTID1
TP19686 HDA3_AUD_BCLK
TP19687 HDA3_AUD_RST#
TP19688 HDA3_AUD_SDI0
TP19689 HDA3_AUD_SDO
TP19690 HDA3_AUD_SYNC
TP19691 HDA3_HDMI_BCLK
TP19692 HDA3_HDMI_RST#
TP19693 HDA3_HDMI_SDI2
TP19694 HDA3_HDMI_SDO
TP19695 HDA3_HDMI_SYNC
TP19696 HDA3_MDC_BCLK
TP19633 HDA3_MDC_RST#
TP19634 HDA3_MDC_SDI1
TP19635 HDA3_MDC_SDO
TP19636 HDA3_MDC_SYNC

TP19638 KBC3_A20G
TP19639 KBC3_BKLTON
TP19640 KBC3_BLCKPWRSW#

TP19642 KBC3_CHGEN
TP19643 KBC3_CHKPWRSW#
TP19644 KBC3_CPURST#
TP19645 KBC3_EXTSMI#
TP19646 KBC3_LED_ACIN#

TP19651 KBC3_LED_CHARGE#

TP19653 KBC3_LED_POWER#

TP19657 KBC3_PRECHG
TP19658 KBC3_PWRBTN#
TP19659 KBC3_PWRGD
TP19660 KBC3_PWRON
TP19661 KBC3_PWRON_INV#
TP19662 KBC3_PWRSW#
TP19663 KBC3_RSMRST#
TP19664 KBC3_RST#
TP19624 KBC3_RUNSCI#

TP19626 KBC3_SMCLK#
TP19627 KBC3_SMDATA#
TP19628 KBC3_SUSPWR
TP19629 KBC3_THERM_SMCLK
TP19630 KBC3_THERM_SMDATA
TP19631 KBC3_VRON
TP19632 KBC3_WAKESCI#
TP19798 KBC5_KSI(0)
TP19799 KBC5_KSI(1)
TP19800 KBC5_KSI(2)
TP19801 KBC5_KSI(3)
TP19802 KBC5_KSI(4)
TP19803 KBC5_KSI(5)
TP19804 KBC5_KSI(6)
TP19805 KBC5_KSI(7)

TP19780 KBC5_KSO(0)
TP19781 KBC5_KSO(1)
TP19782 KBC5_KSO(10)
TP19783 KBC5_KSO(11)
TP19784 KBC5_KSO(12)
TP19785 KBC5_KSO(13)
TP19786 KBC5_KSO(14)
TP19787 KBC5_KSO(15)
TP19788 KBC5_KSO(2)
TP19789 KBC5_KSO(3)
TP19790 KBC5_KSO(4)
TP19791 KBC5_KSO(5)
TP19792 KBC5_KSO(6)
TP19793 KBC5_KSO(7)
TP19794 KBC5_KSO(8)
TP19795 KBC5_KSO(9)
TP19796 KBC5_TCLK
TP19797 KBC5_TDATA
TP19611 LAN3_ACTLED#
TP19612 LAN3_LINK1000#
TP19613 LAN3_LINK10_100#
TP19614 LAN3_VPDCLK
TP19615 LAN3_VPDDATA
TP19616 LCD3_BKLTON
TP19617 LCD3_BRIT
TP19618 LCD3_EDID_CLK
TP19619 LCD3_EDID_DATA
TP19620 LID3_SWITCH#
TP19621 LOM3_CLKREQ#
TP19622 LPC3_LAD(0)
TP19623 LPC3_LAD(1)
TP19602 LPC3_LAD(2)
TP19603 LPC3_LAD(3)
TP19604 LPC3_LFRAME#

TP19607 MCD3_MSINS#

TP19592 MCD3_XDCD#
TP19593 MCD3_XDCE#

TP19595 MCH1_HVREF
TP19596 MCH1_HXSWING
TP19597 MCH3_CLKREQ#
TP19598 MCH3_EXTTS0#
TP19599 MCH3_EXTTS1#
TP19600 MCH3_ICHSYNC#
TP19601 MCKEA
TP20043 MIN3_CLKREQ#
TP20044 PCI3_CLKRUN#
TP20045 PEG3_BKLTEN
TP20046 PEG3_HPD_HDMI
TP20047 PEG3_LCDVDDON
TP20048 PEG5_HDMI_CLK
TP20049 PEG5_HDMI_DATA
TP20050 PEX3_WAKE#
TP20051 PLT3_RST_ORG#
TP20021 RASA#
TP20022 SMB3_ALERT#
TP20023 SMB3_CLK
TP20024 SMB3_DATA
TP20025 SPI3_CLK
TP20026 SPI3_CS0#
TP20027 SPI3_MISO
TP20028 SPI3_MOSI
TP20029_SUB SUB_AUD5_HP_MUTE
TP20030_SUB SUB_AUD5_HP_O_LEFT
TP20031_SUB SUB_AUD5_HP_O_RIGHT
TP20032_SUB SUB_AUD5_MIC1_LEFT
TP20033_SUB SUB_AUD5_MIC1_RIGHT
TP20034_SUB SUB_AUD5_SENS_HP#
TP20035_SUB SUB_AUD5_SENS_MIC#

TP20037_SUB SUB_EXP3_CLKREQ#

TP20039_SUB SUB_PEX3_WAKE#
TP20040_SUB SUB_PLT3_RST#
TP20041_SUB SUB_SMB3_CLK
TP20042_SUB SUB_SMB3_DATA

TP19806 THM3_ALERT#
TP19807 T_L_BUTTON#
TP19808 T_R_BUTTON#
TP19809 VCCP3_PWRGD
TP19810 VRM3_CPU_PWRGD
TP19811 VRM3_ISEN1
TP19812 VRM3_ISEN2
TP19813 VRM3_VCC_PRM

TP19994 WEA#
TP19995 WLON_LED#

TP19961_SUB P1.5V

TP19902_SUB P1.5V_EXP
TP19903_SUB P1.5V_EXP

TP20016 G_AUD
TP20017 G_AUD

TP19870 P3.3V

TP19874_SUB P3.3V_AUX
TP19875 P3.3V_AUX

TP19878_SUB P3.3V_AUX_EXP
TP19879_SUB P3.3V_AUX_EXP

TP19886_SUB P3.3V_EXP

TP19890 P3.3V_MCD

TP19893 P3.3V_MCD

TP19850 P5.0V_AUX
TP19851 P5.0V_AUX

TP19823_SUB SUB_G_AUD

TP19826_SUB SUB_G_AUD

Samsung Confidential

http://hobi-elektronika.net

DRAW XIAOHONG ZHANG	DATE 06/03/2008	TITLE TianJin_EXT TP	SAMSUNG ELECTRONICS
CHECK RUJIN ZHENG	DEV. STEP PR		
APPROVAL BC LEE	REV REV 1.0		PART NO. BA41-00897A/898A
MODULE CODE	LAST EDIT June 03, 2008 11:43:58 AM		PAGE 17 OF 17

SAMSUNG PROPRIETARY
THIS DOCUMENT CONTAINS CONFIDENTIAL
PROPRIETARY INFORMATION THAT IS
SAMSUNG ELECTRONICS CO'S PROPERTY.
DO NOT DISCLOSE TO OR DUPLICATE FOR OTHERS
EXCEPT AS AUTHORIZED BY SAMSUNG.

FSA BSEL0	FSB BSEL1	FSC BSEL2	HOST CLK
0	0	0	266 MHz
0	0	1	333 MHz
0	1	0	200 MHz
0	1	1	400 MHz
1	0	0	133 MHz
1	0	1	100 MHz
1	1	0	166 MHz
1	1	1	RSVD

Use the default setting

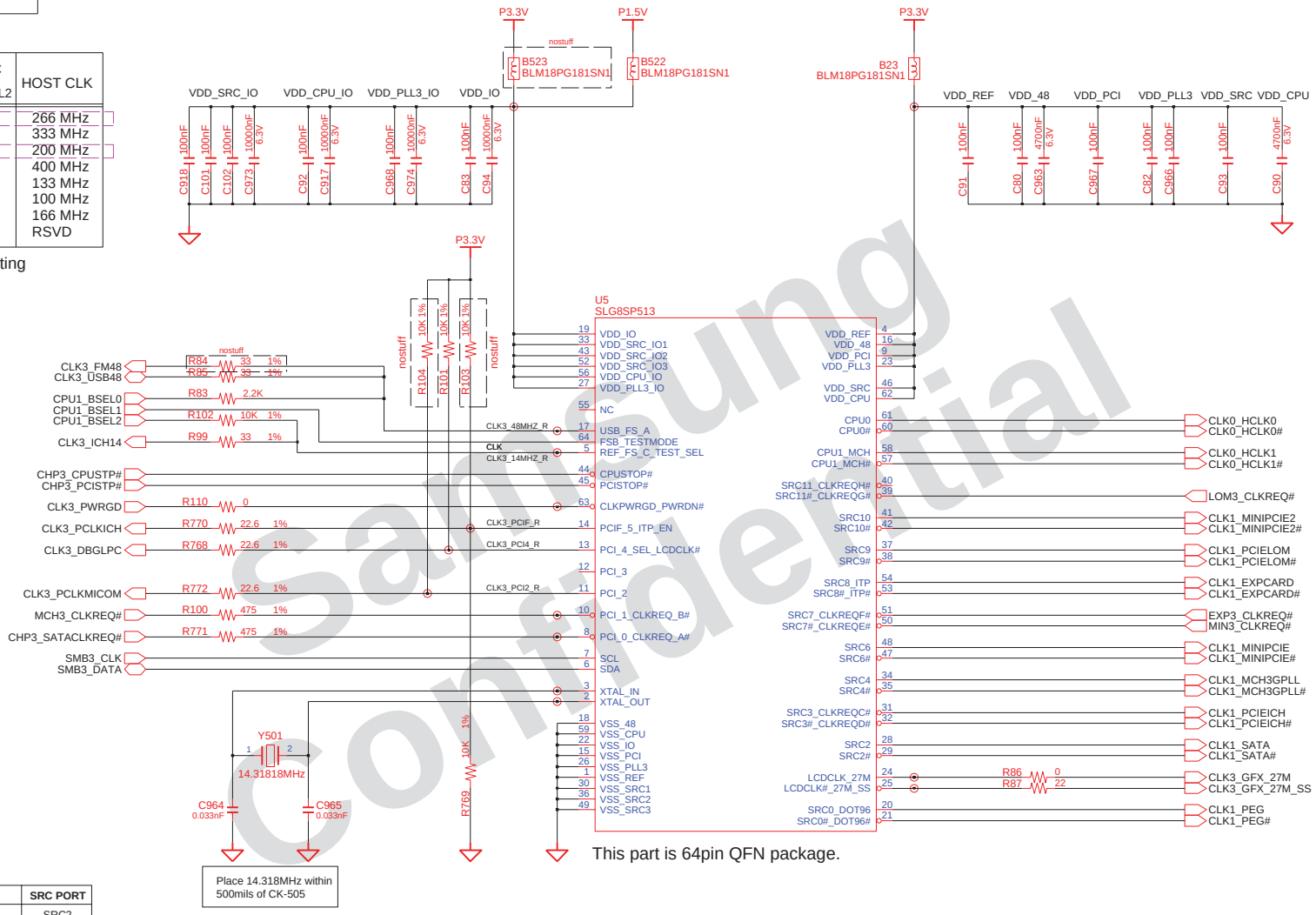

Place 14.318MHz within 500mils of CK-505

This part is 64pin QFN package.

CLK REQ	DEVICE	SRC PORT
CLK REQ A	SATA	SRC2
CLK REQ B	GMCH	SRC4
CLK REQ E	MINI CARD	SRC6
CLK REQ F	EXP3_CLKREQ#	SRC8
CLK REQ G	LOM3_CLKREQ#	SRC9

SEL_LCDCLK*	Pin 20/21	Pin 24/25
LOW	DOT_96/DOT_96#	PEG_CLK/PEG_CLK#
HIGH	SRC_0/SRC_0#	27M & 27M_SS

Samsung Confidential

http://hobi-elektronika.net

DRAW: XIAOHONG ZHANG	DATE: 06/03/2008	TITLE: TianJin_EXT Main_Clock_Circuit CK_Clock_505M	SAMSUNG ELECTRONICS
CHECK: RUJIN ZHENG	DEV. STEP: PR		
APPROVAL: BC LEE	REV: REV 1.0		PART NO. BA41-00897A/898A
MODULE CODE: undefined	LAST EDIT: June 03, 2008 11:43:58 AM		PAGE 1 OF 1

SAMSUNG PROPRIETARY
THIS DOCUMENT CONTAINS CONFIDENTIAL
PROPRIETARY INFORMATION THAT IS
SAMSUNG ELECTRONICS CO'S PROPERTY.
DO NOT DISCLOSE TO OR DUPLICATE FOR OTHERS
EXCEPT AS AUTHORIZED BY SAMSUNG.

THERMAL SENSOR & FAN CONTROL

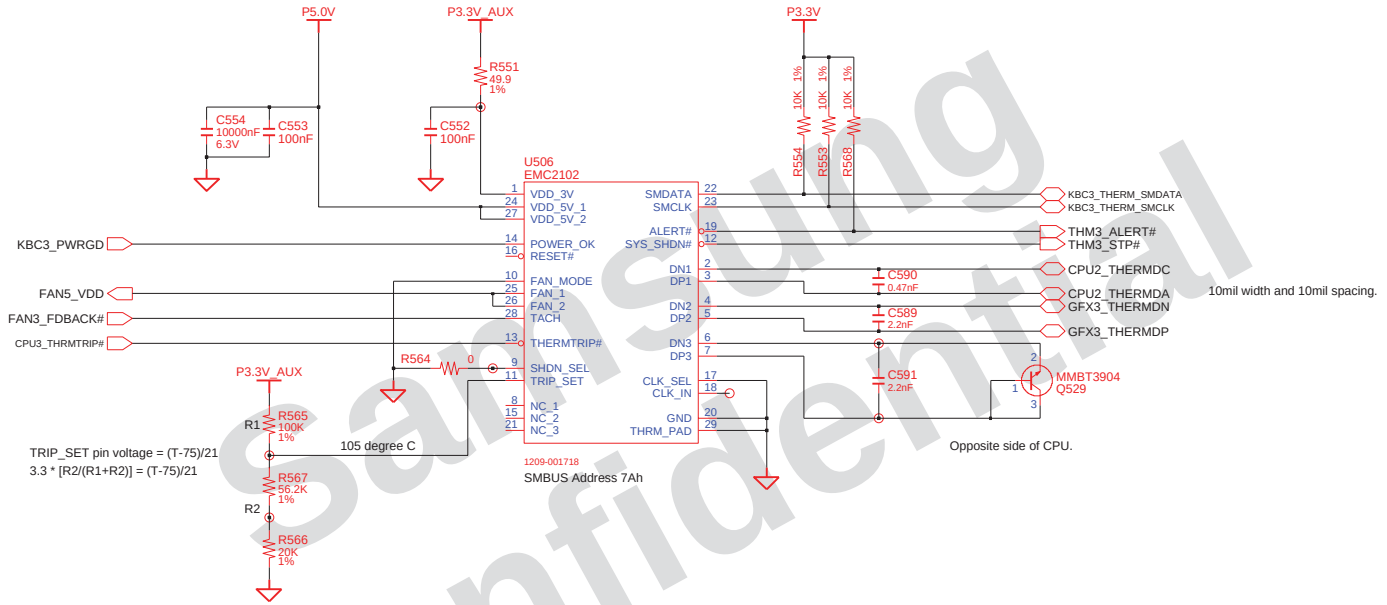

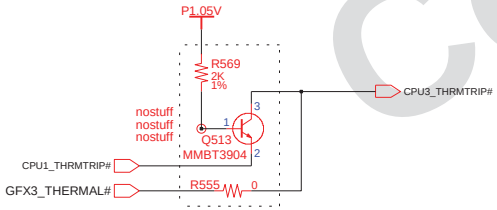

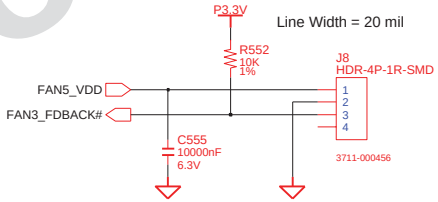

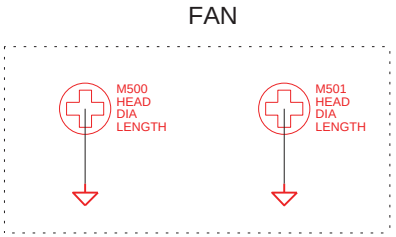

Samsung Confidential

DRAW XIAOHONG ZHANG	DATE 06/03/2008	TITLE TianJin_EXT	SAMSUNG ELECTRONICS
CHECK RUJIN ZHENG	DEV. STEP PR	Thermal_Sensor_SMSC_Emc2102	
APPROVAL BC LEE	REV REV 1.0	Thermal_Sensor_SMSC_Emc2102	PART NO. BA41-00897A/898A
MODULE CODE	LAST EDIT June 03, 2008 11:43:58 AM	PAGE 1 OF 1	

http://hobi-elektronika.net

SAMSUNG PROPRIETARY
THIS DOCUMENT CONTAINS CONFIDENTIAL
PROPRIETARY INFORMATION THAT IS
SAMSUNG ELECTRONICS CO'S PROPERTY.
DO NOT DISCLOSE TO OR DUPLICATE FOR OTHERS
EXCEPT AS AUTHORIZED BY SAMSUNG.

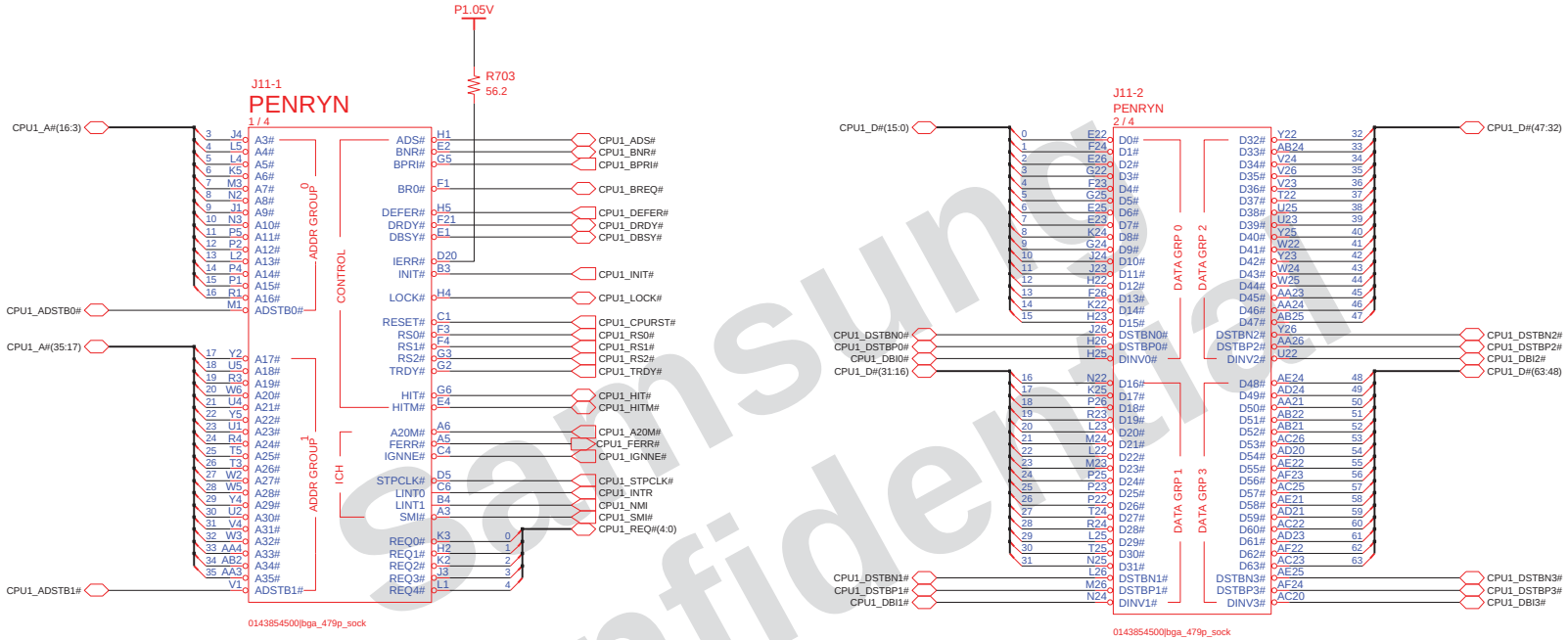

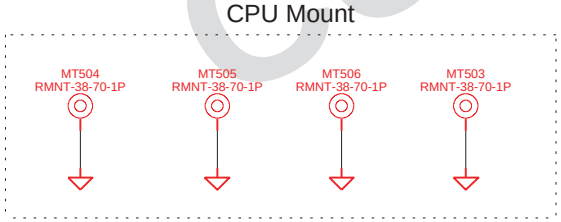

Samsung Confidential

DRAW: XIAOHONG ZHANG	DATE: 06/03/2008	TITLE: TianJin_EXT CPU PENRYN (1/3)	SAMSUNG ELECTRONICS
CHECK: RUJIN ZHENG	DEV. STEP: PR		
APPROVAL: BC LEE	REV: REV 1.0		PART NO. BA41-00897A/898A
MODULE CODE: undefined	LAST EDIT: June 03, 2008 11:43:58 AM		PAGE 1 OF 3

http://hobi-elektronika.net

SAMSUNG PROPRIETARY
THIS DOCUMENT CONTAINS CONFIDENTIAL
PROPRIETARY INFORMATION THAT IS
SAMSUNG ELECTRONICS CO'S PROPERTY.
DO NOT DISCLOSE TO OR DUPLICATE FOR OTHERS
EXCEPT AS AUTHORIZED BY SAMSUNG.

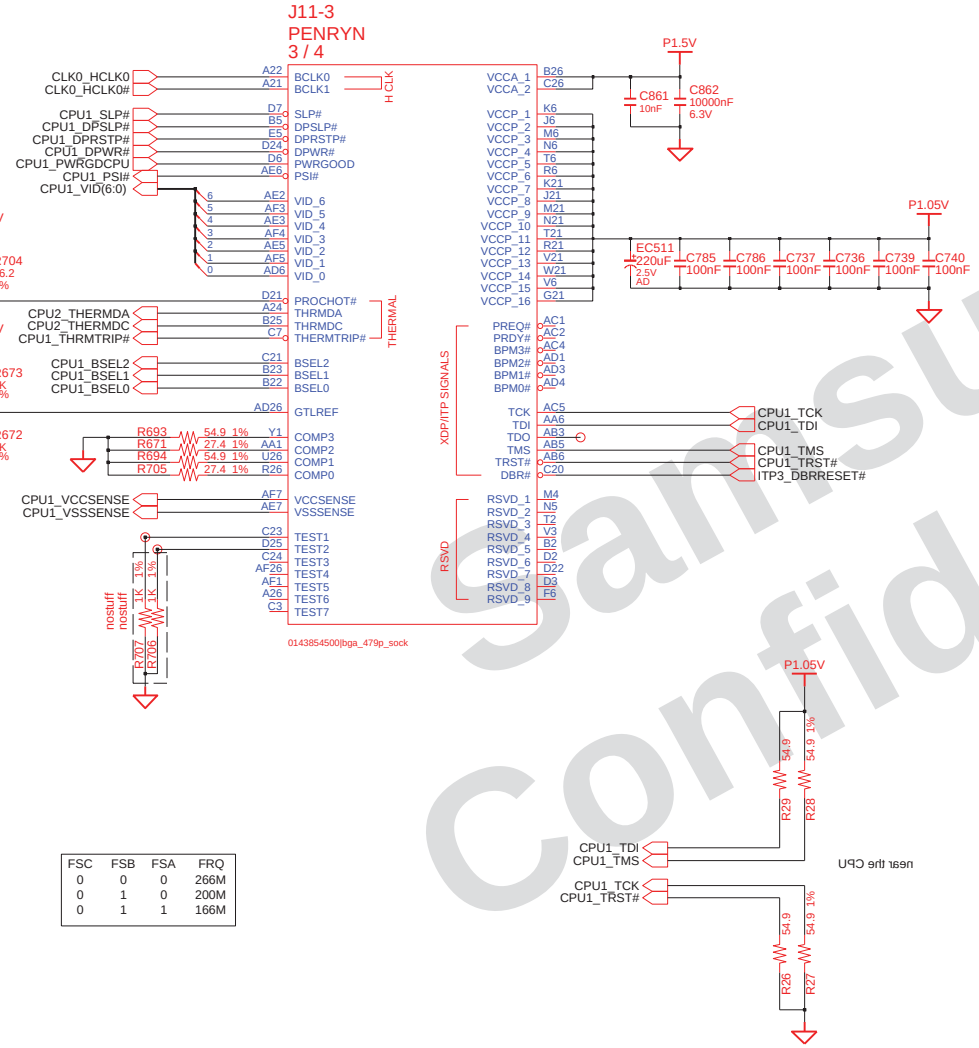

FSC	FSB	FSA	FRQ
0	0	0	266M
0	1	0	200M
0	1	1	166M

CPU Core Voltage Table

IMVP-6

Active Mode VID(6:0)	Voltage	Active/Deeper Sleep Dual Mode Region VID(6:0)	Voltage	Deeper Sleep/Extended Deeper Sleep Dual Mode Region VID(6:0)	Voltage
0 0 0 0 0 0 0	1.5000 V	0 1 0 1 0 0 0	1.0000 V	1 0 1 0 0 0 1	0.4875 V
0 0 0 0 0 0 1	1.4875 V	0 1 0 1 0 0 1	0.9875 V	1 0 1 0 0 1 0	0.4750 V
0 0 0 0 0 1 0	1.4750 V	0 1 0 1 0 1 0	0.9750 V	1 0 1 0 0 1 1	0.4625 V
0 0 0 0 0 1 1	1.4625 V	0 1 0 1 0 1 1	0.9625 V	1 0 1 0 1 0 0	0.4500 V
0 0 0 0 1 0 0	1.4500 V	0 1 0 1 1 0 0	0.9500 V	1 0 1 0 1 0 1	0.4375 V
0 0 0 0 1 0 1	1.4375 V	0 1 0 1 1 0 1	0.9375 V	1 0 1 0 1 1 0	0.4250 V
0 0 0 0 1 1 0	1.4250 V	0 1 0 1 1 1 0	0.9250 V	1 0 1 0 1 1 1	0.4125 V
0 0 0 0 1 1 1	1.4125 V	0 1 0 1 1 1 1	0.9125 V	1 0 1 1 0 0 0	0.4000 V
0 0 0 1 0 0 0	1.4000 V	0 1 1 0 0 0 0	0.9000 V	1 0 1 1 0 0 1	0.3875 V
0 0 0 1 0 0 1	1.3875 V	0 1 1 0 0 0 1	0.8875 V	1 0 1 1 0 1 0	0.3750 V
0 0 0 1 0 1 0	1.3750 V	0 1 1 0 0 1 0	0.8750 V	1 0 1 1 0 1 1	0.3625 V
0 0 0 1 0 1 1	1.3625 V	0 1 1 0 0 1 1	0.8625 V	1 0 1 1 1 0 0	0.3500 V
0 0 0 1 1 0 0	1.3500 V	0 1 1 0 1 0 0	0.8500 V	1 0 1 1 1 0 1	0.3375 V
0 0 0 1 1 0 1	1.3375 V	0 1 1 0 1 0 1	0.8375 V	1 0 1 1 1 1 0	0.3250 V
0 0 0 1 1 1 0	1.3250 V	0 1 1 0 1 1 0	0.8250 V	1 0 1 1 1 1 1	0.3125 V
0 0 0 1 1 1 1	1.3125 V	0 1 1 0 1 1 1	0.8125 V	1 1 0 0 0 0 0	0.3000 V
0 0 1 0 0 0 0	1.3000 V	0 1 1 1 0 0 0	0.8000 V	1 1 0 0 0 0 1	0.2875 V
0 0 1 0 0 0 1	1.2875 V	0 1 1 1 0 0 1	0.7875 V	1 1 0 0 0 1 0	0.2750 V
0 0 1 0 0 1 0	1.2750 V	0 1 1 1 0 1 0	0.7750 V	1 1 0 0 0 1 1	0.2625 V
0 0 1 0 0 1 1	1.2625 V	0 1 1 1 0 1 1	0.7625 V	1 1 0 0 1 0 0	0.2500 V
0 0 1 0 1 0 0	1.2500 V	0 1 1 1 1 0 0	0.7500 V	1 1 0 0 1 0 1	0.2375 V
0 0 1 0 1 0 1	1.2375 V	0 1 1 1 1 0 1	0.7375 V	1 1 0 0 1 1 0	0.2250 V
0 0 1 0 1 1 0	1.2250 V	0 1 1 1 1 1 0	0.7250 V	1 1 0 0 1 1 1	0.2125 V
0 0 1 0 1 1 1	1.2125 V	0 1 1 1 1 1 1	0.7125 V	1 1 0 1 0 0 0	0.2000 V
0 0 1 1 0 0 0	1.2000 V	1 0 0 0 0 0 0	0.7000 V	1 1 0 1 0 0 1	0.1875 V
0 0 1 1 0 0 1	1.1875 V	1 0 0 0 0 0 1	0.6875 V	1 1 0 1 0 1 0	0.1750 V
0 0 1 1 0 1 0	1.1750 V	1 0 0 0 0 1 0	0.6750 V	1 1 0 1 0 1 1	0.1625 V
0 0 1 1 0 1 1	1.1625 V	1 0 0 0 0 1 1	0.6625 V	1 1 0 1 1 0 0	0.1500 V
0 0 1 1 1 0 0	1.1500 V	1 0 0 0 1 0 0	0.6500 V	1 1 0 1 1 0 1	0.1375 V
0 0 1 1 1 0 1	1.1375 V	1 0 0 0 1 0 1	0.6375 V	1 1 0 1 1 1 0	0.1250 V
0 0 1 1 1 1 0	1.1250 V	1 0 0 0 1 1 0	0.6250 V	1 1 0 1 1 1 1	0.1125 V
0 0 1 1 1 1 1	1.1125 V	1 0 0 0 1 1 1	0.6125 V	1 1 1 0 0 0 0	0.1000 V
0 1 0 0 0 0 0	1.1000 V	1 0 0 1 0 0 0	0.6000 V	1 1 1 0 0 0 1	0.0875 V
0 1 0 0 0 0 1	1.0875 V	1 0 0 1 0 0 1	0.5875 V	1 1 1 0 0 1 0	0.0750 V
0 1 0 0 0 1 0	1.0750 V	1 0 0 1 0 1 0	0.5750 V	1 1 1 0 0 1 1	0.0625 V
0 1 0 0 0 1 1	1.0625 V	1 0 0 1 0 1 1	0.5625 V	1 1 1 0 1 0 0	0.0500 V
0 1 0 0 1 0 0	1.0500 V	1 0 0 1 1 0 0	0.5500 V	1 1 1 0 1 0 1	0.0375 V
0 1 0 0 1 0 1	1.0375 V	1 0 0 1 1 0 1	0.5375 V	1 1 1 0 1 1 0	0.0250 V
0 1 0 0 1 1 0	1.0250 V	1 0 0 1 1 1 0	0.5250 V	1 1 1 0 1 1 1	0.0125 V
0 1 0 0 1 1 1	1.0125 V	1 0 0 1 1 1 1	0.5125 V	1 1 1 0 0 0 0	0.0000 V
		1 0 1 0 0 0 0	0.5000 V	1 1 1 0 0 0 1	0.0000 V
				1 1 1 0 0 1 0	0.0000 V
				1 1 1 0 1 1 1	0.0000 V
				1 1 1 0 1 0 0	0.0000 V
				1 1 1 0 1 0 1	0.0000 V
				1 1 1 0 1 1 0	0.0000 V
				1 1 1 0 1 1 1	0.0000 V

Active	
DPRSLPVR	0
DPRSTP*	1
PSI2*	0 or 1

Deeper Slp	
DPRSLPVR	1
DPRSTP*	0
PSI2*	0 or 1

*"1111111" : 0V power good asserted.

*Yonah Processor (2.33 GHz / 800 MHz : TBD)

GTLREF : Keep the Voltage divider within 0.5" of the first GTLREF0 pin with Zo=55ohm trace. Minimize coupling of any switching signals to this net.

COMP0,2(COMP1,3) should be connected with Zo=27.4ohm(55ohm) trace shorter than 1/2" to their respective Banias socket pins.

GND test points within 100mil of the VCC/VSSsense at the end of the line. Route the VCC/VSSsense as a Zo=55ohm traces with equal length. Observe 3:1 spacing b/w VCC/VSSsense lines and 25mil away (preferred 50mil) from any other signal. And GND via 100mil away from each of the VCC/VSS test point vias.

DRAW: XIAOHONG ZHANG	DATE: 06/03/2008	TITLE: TianJin_EXT CPU PENRYN (2/3)	SAMSUNG ELECTRONICS
CHECK: RUJIN ZHENG	DEV. STEP: PR		
APPROVAL: BC LEE	REV: REV 1.0		PART NO. BA41-00897A/898A
MODULE CODE: undefined	LAST EDIT: June 03, 2008 11:43:58 AM		PAGE 2 OF 3

Samsung Confidential

http://hobi-elektronika.net

SAMSUNG PROPRIETARY
THIS DOCUMENT CONTAINS CONFIDENTIAL
PROPRIETARY INFORMATION THAT IS
SAMSUNG ELECTRONICS CO'S PROPERTY.
DO NOT DISCLOSE TO OR DUPLICATE FOR OTHERS
EXCEPT AS AUTHORIZED BY SAMSUNG.

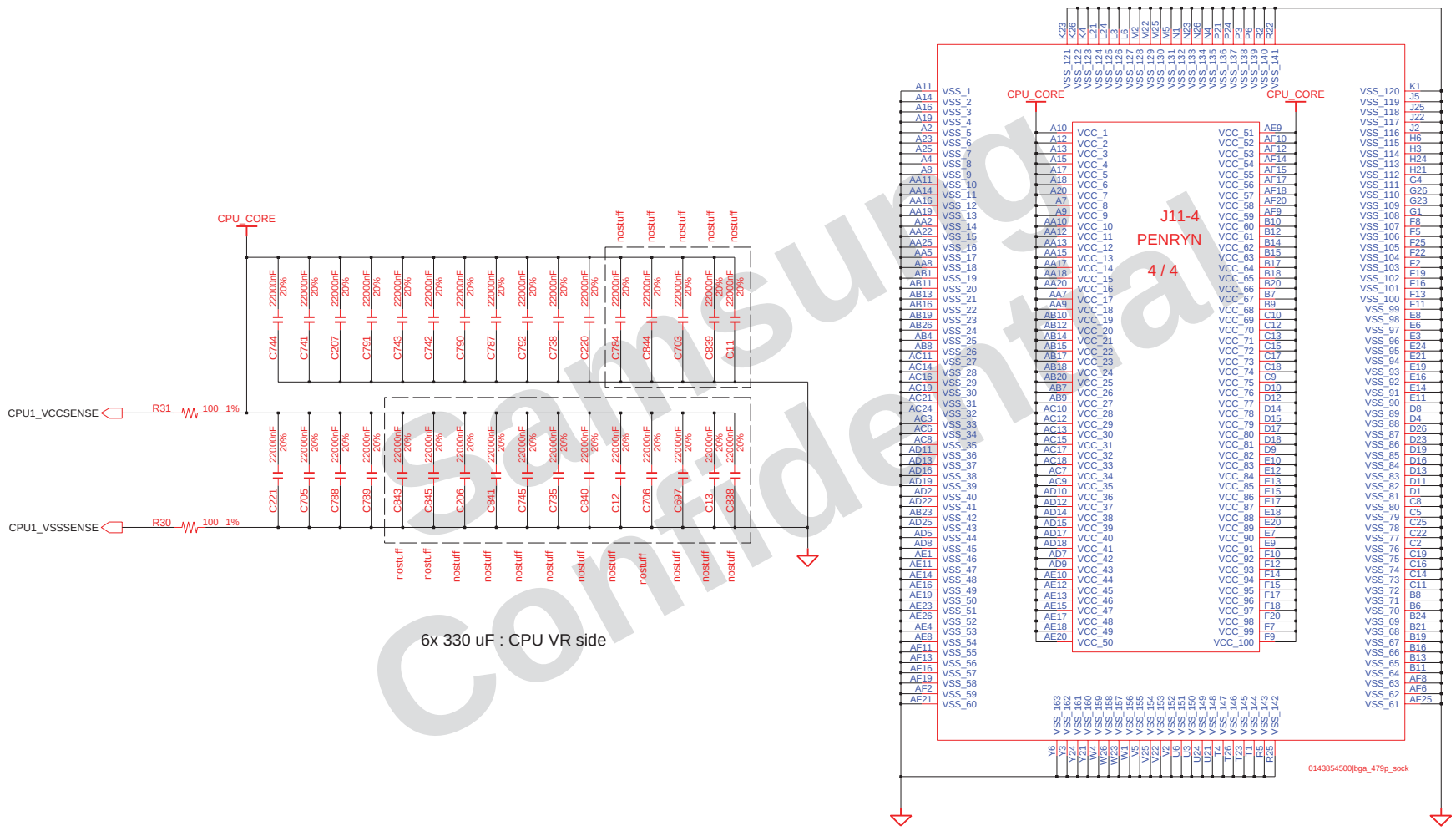

6x 330 uF : CPU VR side

Samsung Confidential

DRAW XIAOHONG ZHANG	DATE 06/03/2008	TITLE TianJin_EXT CPU PENRYN (3/3)	SAMSUNG ELECTRONICS
CHECK RUJIN ZHENG	DEV. STEP PR		PART NO. BA41-00897A/898A
APPROVAL BC LEE	REV REV 1.0		
MODULE CODE undefined	LAST EDIT June 03, 2008 11:43:58 AM		PAGE 3 OF 3

http://hobi-elektronika.net

SAMSUNG PROPRIETARY
THIS DOCUMENT CONTAINS CONFIDENTIAL PROPRIETARY INFORMATION THAT IS SAMSUNG ELECTRONICS CO'S PROPERTY. DO NOT DISCLOSE TO OR DUPLICATE FOR OTHERS EXCEPT AS AUTHORIZED BY SAMSUNG.

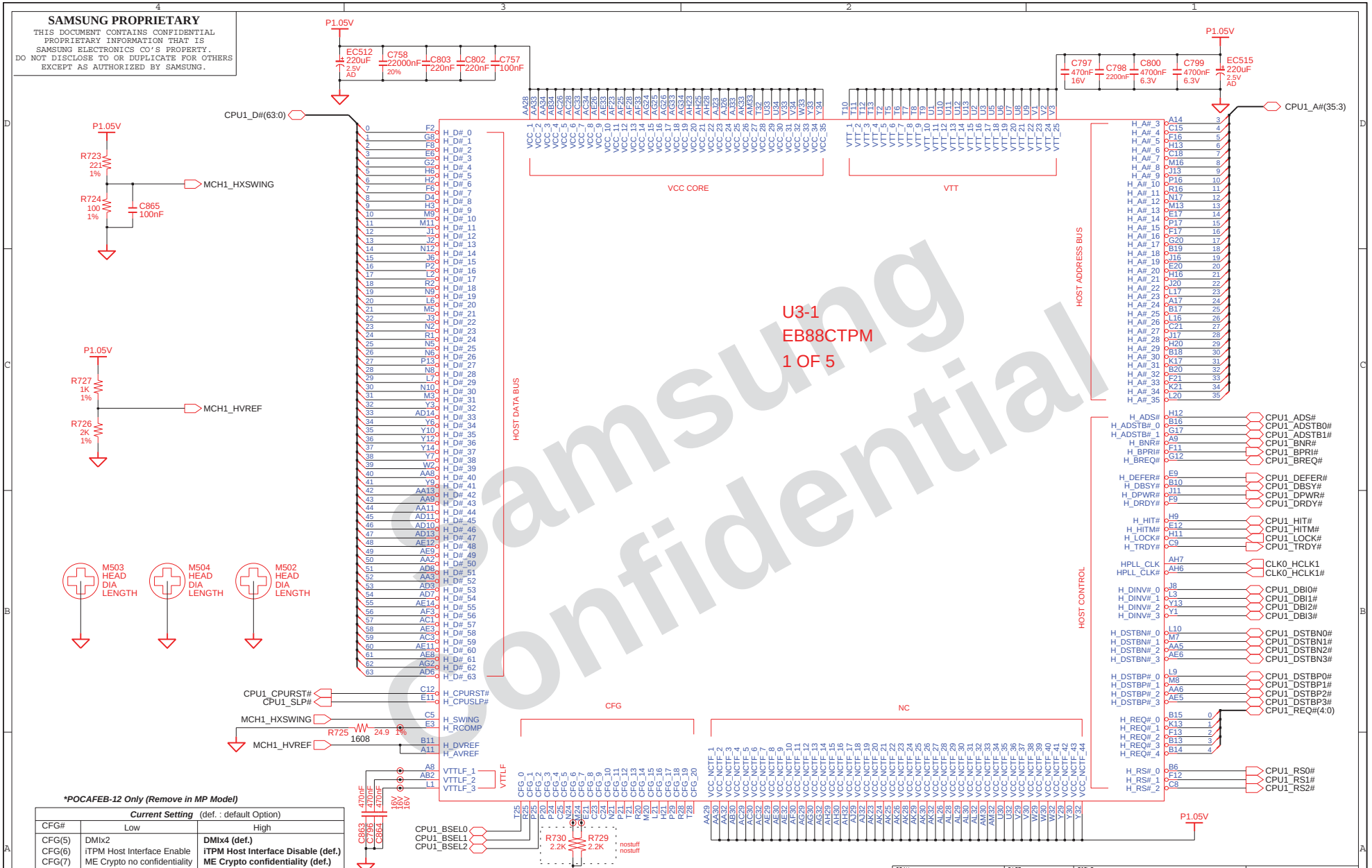

*POCAFEB-12 Only (Remove in MP Model)

Current Setting (def. : default Option)		
CFG#	Low	High
CFG(5)	DMIx2	**DMIx4 (def.)**
CFG(6)	iTPM Host Interface Enable	**iTPM Host Interface Disable (def.)**
CFG(7)	ME Crypto no confidentiality	**ME Crypto confidentiality (def.)**
CFG(9)	PEG Reversal (def.)	**Normal**
CFG(10)	PCIE Loop Back Enable	**PCIE Loop Back Disable(def)**
CFG(16)	Dynamic ODT Disabled	**Dynamic ODT Enabled (def.)**
CFG(19)	**DMI Lane Normal (def.)**	DMI Lane Reversal
CFG(20)	**SDVO or PCIE X1 Only(def.)**	SDVO and PCIE X1 Simultaneously

http://hobi-elektronika.net

DRAW: XIAOHONG ZHANG	DATE: 06/03/2008	TITLE: TianJin_EXT MCH_CANTIGA_PM_DDR3 CANTIGA (1/5)	SAMSUNG ELECTRONICS
CHECK: RUJIN ZHENG	DEV. STEP: PR		PART NO. BA41-00897A/898A
APPROVAL: BC LEE	REV: REV 1.0		
MODULE CODE: undefined	LAST EDIT: June 03, 2008 11:43:58 AM		PAGE 1 OF 5

SAMSUNG PROPRIETARY
THIS DOCUMENT CONTAINS CONFIDENTIAL PROPRIETARY INFORMATION THAT IS SAMSUNG ELECTRONICS CO'S PROPERTY. DO NOT DISCLOSE TO OR DUPLICATE FOR OTHERS EXCEPT AS AUTHORIZED BY SAMSUNG.

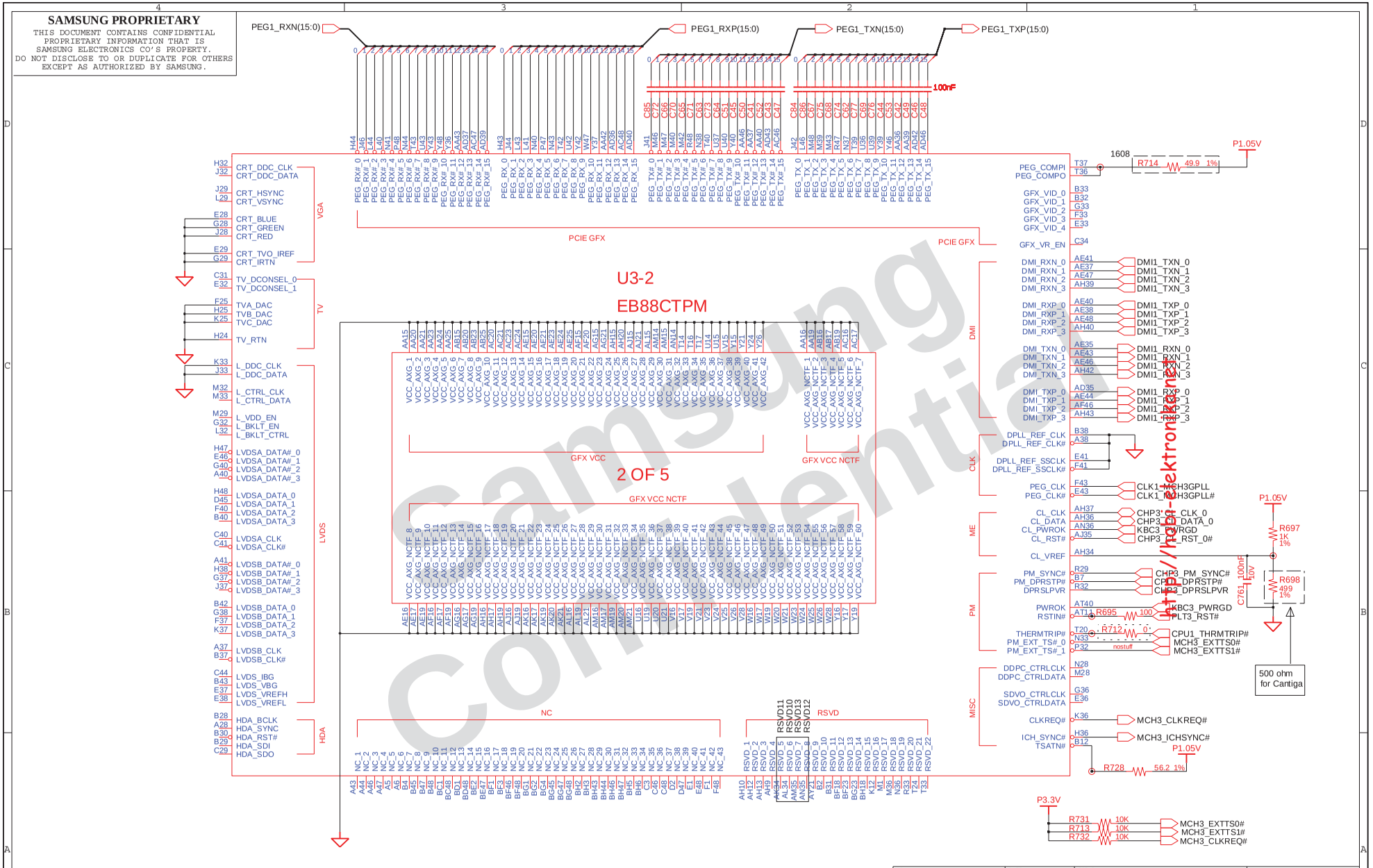

DRAW XIAOHONG ZHANG	DATE 06/03/2008	TITLE TianJin_EXT MCH_CANTIGA_PM_DDR3 CANTIGA (2/5)	SAMSUNG ELECTRONICS
CHECK RUJIN ZHENG	DEV. STEP PR		
APPROVAL BC LEE	REV REV 1.0		PART NO. BA41-00897A/898A
MODULE CODE undefined	LAST EDIT June 03, 2008 11:43:58 AM		PAGE 2 OF 5

SAMSUNG PROPRIETARY
THIS DOCUMENT CONTAINS CONFIDENTIAL
PROPRIETARY INFORMATION THAT IS
SAMSUNG ELECTRONICS CO'S PROPERTY.
DO NOT DISCLOSE TO OR DUPLICATE FOR OTHERS
EXCEPT AS AUTHORIZED BY SAMSUNG.

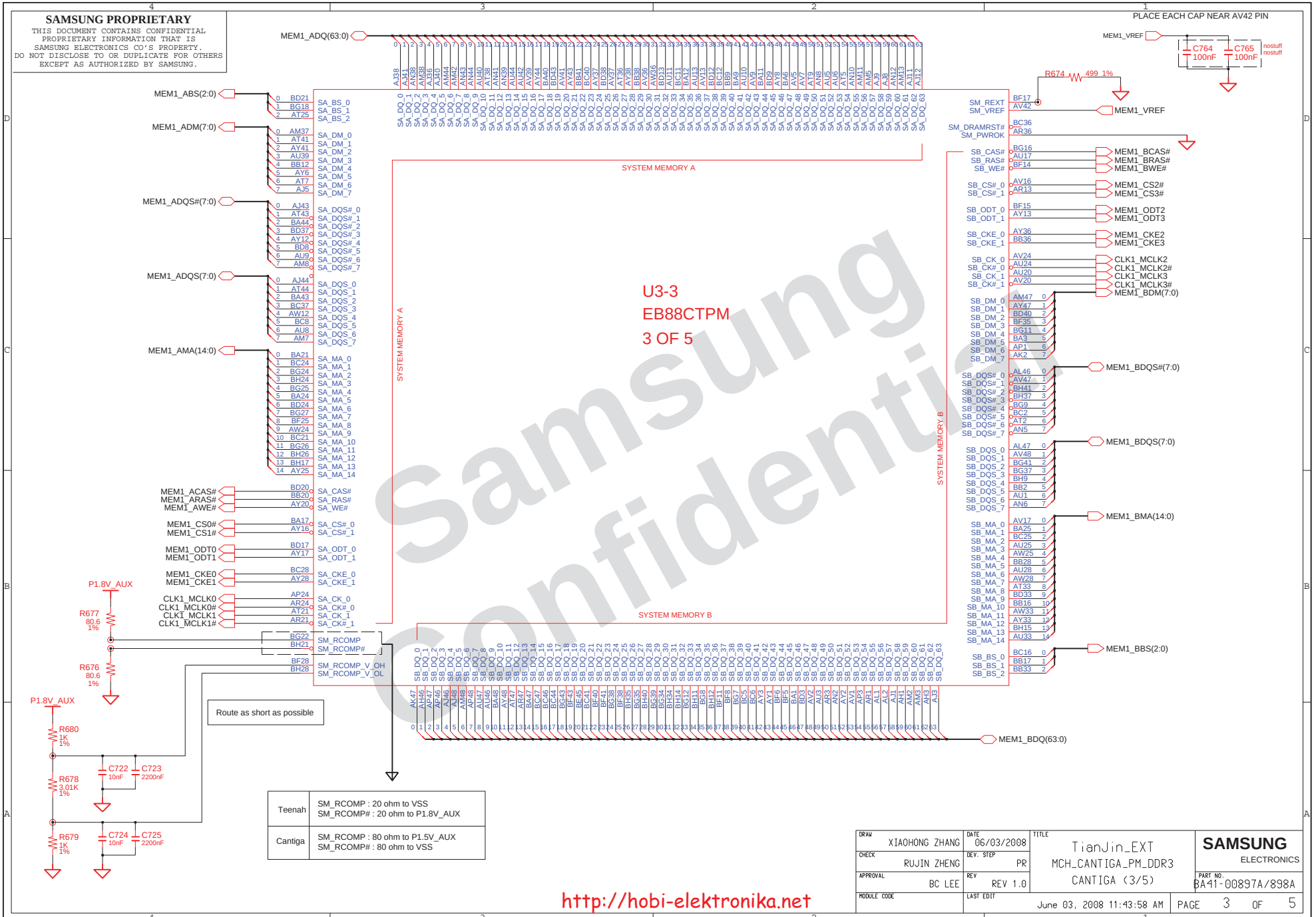

Teenah	SM_RCOMP : 20 ohm to VSS SM_RCOMP# : 20 ohm to P1.8V_AUX
Cantiga	SM_RCOMP : 80 ohm to P1.5V_AUX SM_RCOMP# : 80 ohm to VSS

http://hobi-elektronika.net

DRAW: XIAOHONG ZHANG	DATE: 06/03/2008	TITLE: TianJin_EXT MCH_CANTIGA_PM_DDR3 CANTIGA (3/5)	SAMSUNG ELECTRONICS
CHECK: RUJIN ZHENG	DEV. STEP: PR		
APPROVAL: BC LEE	REV: REV 1.0		PART NO. BA41-00897A/898A
MODULE CODE	LAST EDIT: June 03, 2008 11:43:58 AM		PAGE 3 OF 5

SAMSUNG PROPRIETARY
THIS DOCUMENT CONTAINS CONFIDENTIAL
PROPRIETARY INFORMATION THAT IS
SAMSUNG ELECTRONICS CO'S PROPERTY.
DO NOT DISCLOSE TO OR DUPLICATE FOR OTHERS
EXCEPT AS AUTHORIZED BY SAMSUNG.

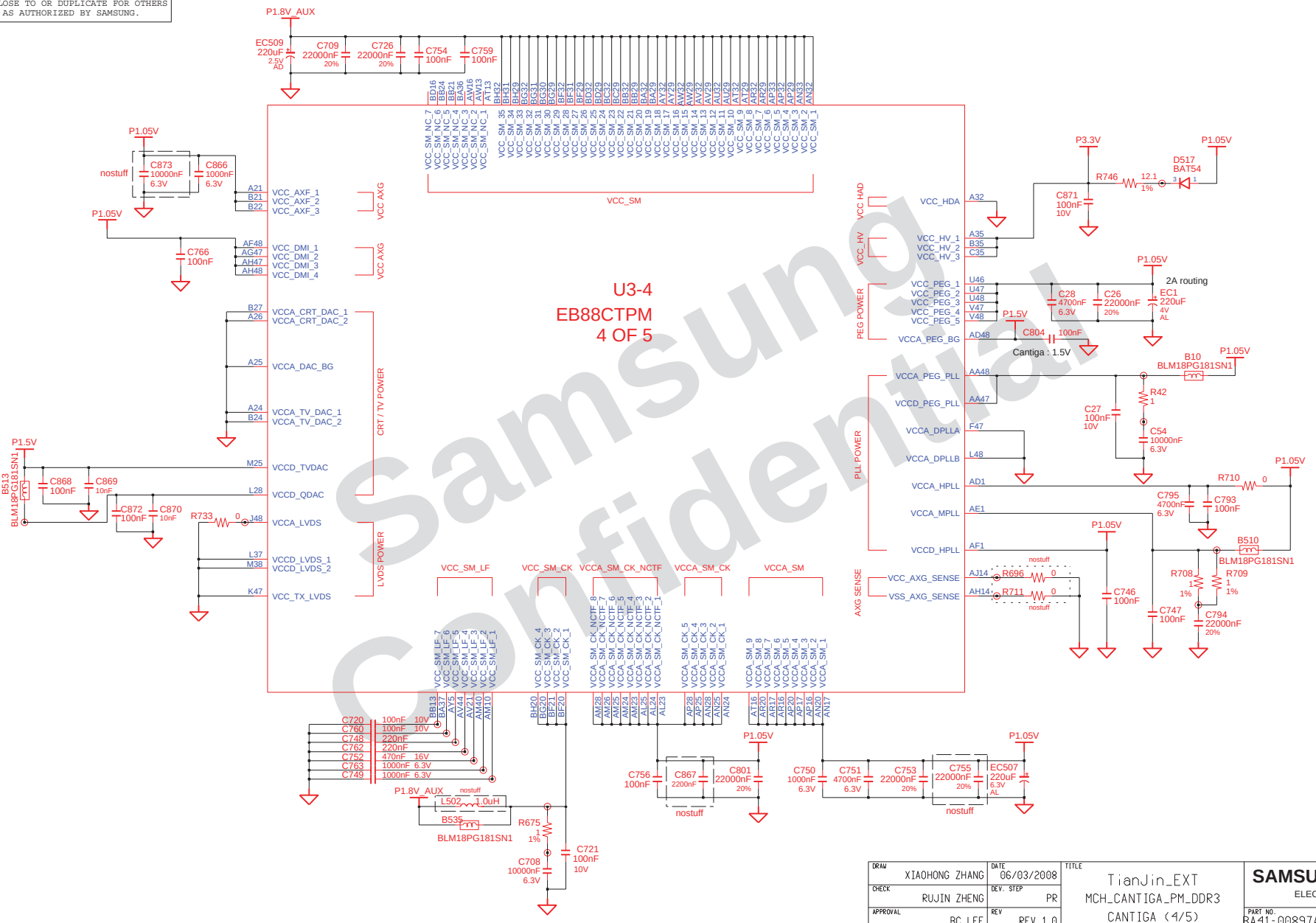

Samsung Confidential

http://hobi-elektronika.net

DRAW: XIAOHONG ZHANG	DATE: 06/03/2008	TITLE: TianJin_EXT MCH_CANTIGA_PM_DDR3 CANTIGA (4/5)	SAMSUNG ELECTRONICS
CHECK: RUJIN ZHENG	DEV. STEP: PR		
APPROVAL: BC LEE	REV: REV 1.0		PART NO. BA41-00897A/898A
MODULE CODE	LAST EDIT: June 03, 2008 11:43:58 AM		PAGE 4 OF 5

SAMSUNG PROPRIETARY
THIS DOCUMENT CONTAINS CONFIDENTIAL
PROPRIETARY INFORMATION THAT IS
SAMSUNG ELECTRONICS CO'S PROPERTY.
DO NOT DISCLOSE TO OR DUPLICATE FOR OTHERS
EXCEPT AS AUTHORIZED BY SAMSUNG.

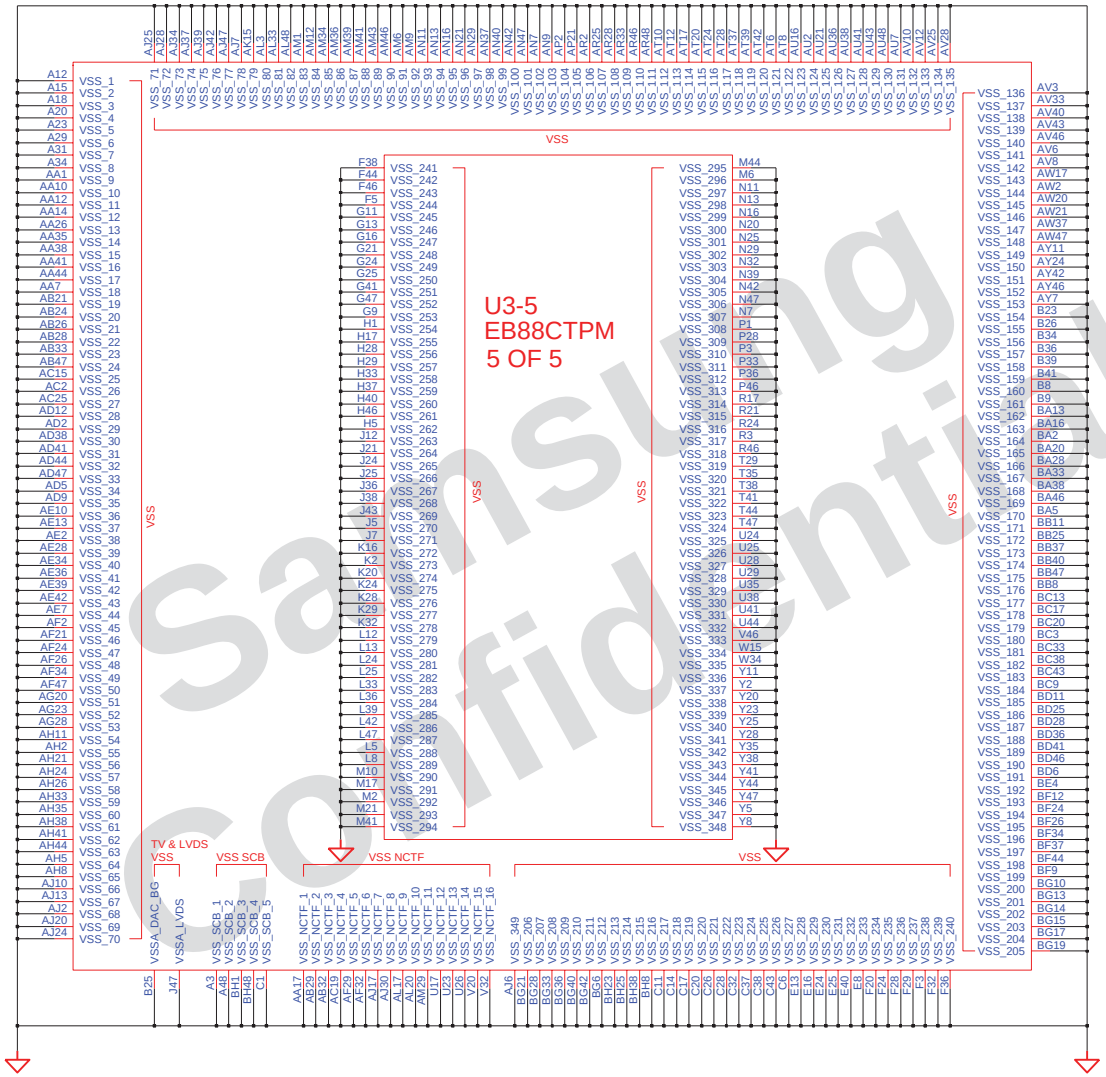

Samsung Confidential

http://hobi-elektronika.net

DRAW XIAOHONG ZHANG	DATE 06/03/2008	TITLE TianJin_EXT MCH_CANTIGA_PM_DDR3 CANTIGA (5/5)	SAMSUNG ELECTRONICS
CHECK RUJIN ZHENG	DEV. STEP PR		
APPROVAL BC LEE	REV REV 1.0		PART NO. BA41-00897A/898A
MODULE CODE	LAST EDIT June 03, 2008 11:43:58 AM		PAGE 5 OF 5

SAMSUNG PROPRIETARY
THIS DOCUMENT CONTAINS CONFIDENTIAL PROPRIETARY INFORMATION THAT IS SAMSUNG ELECTRONICS CO'S PROPERTY. DO NOT DISCLOSE TO OR DUPLICATE FOR OTHERS EXCEPT AS AUTHORIZED BY SAMSUNG.

DDR SO-DIMM #0

Height : 5.2mm (Reverse)

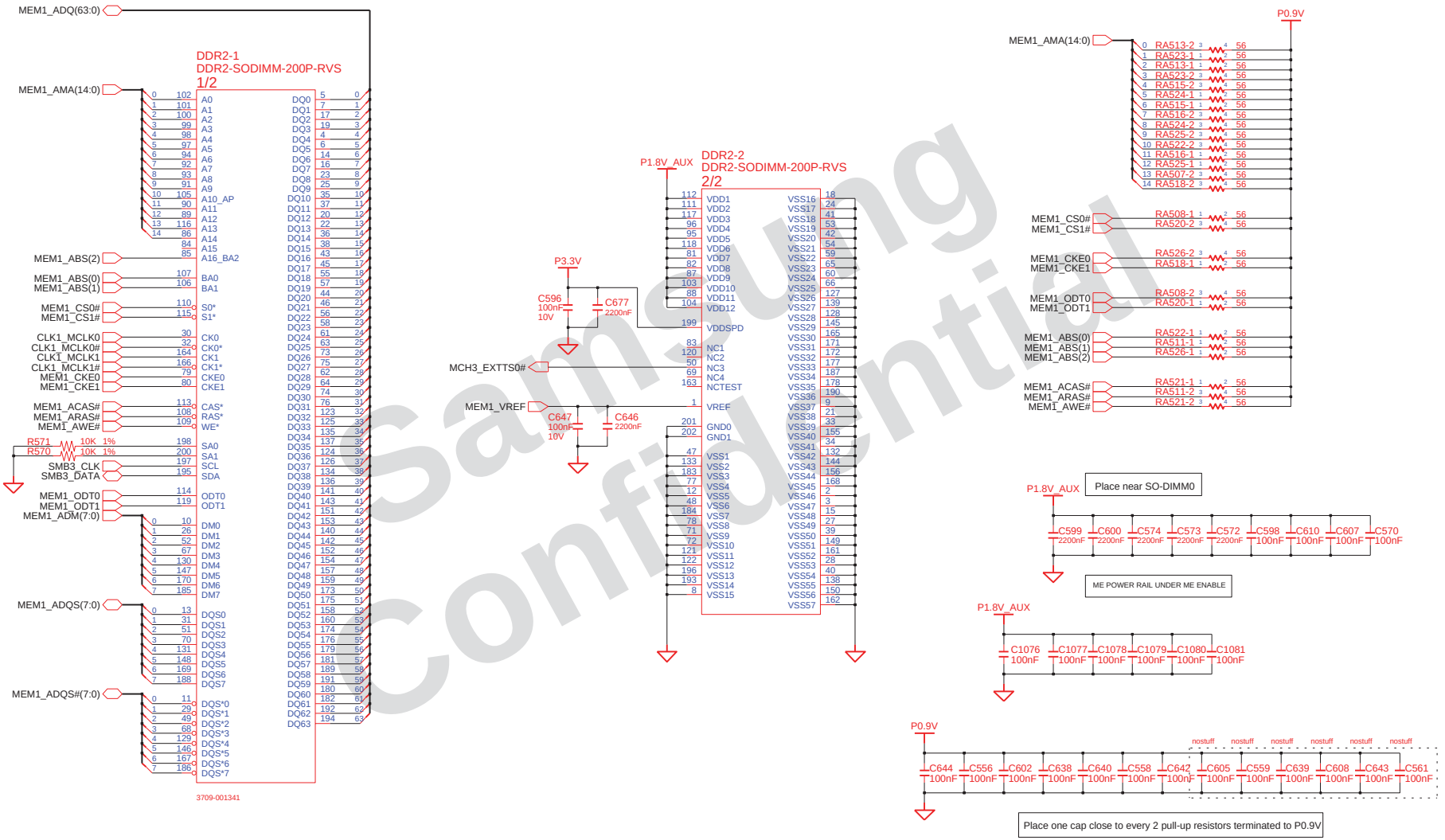

Samsung Confidential

http://hobi-elektronika.net

DRAW XIAOHONG ZHANG	DATE 06/03/2008	TITLE TianJin_EXT SODIMM_DDR2 SODIMM_DDR2 #1	SAMSUNG ELECTRONICS
CHECK RUJIN ZHENG	DEV. STEP PR		
APPROVAL BC LEE	REV REV 1.0		PART NO. BA41-00897A/898A
MODULE CODE	LAST EDIT June 03, 2008 11:43:58 AM		PAGE 1 OF 2

SAMSUNG PROPRIETARY
THIS DOCUMENT CONTAINS CONFIDENTIAL PROPRIETARY INFORMATION THAT IS SAMSUNG ELECTRONICS CO'S PROPERTY. DO NOT DISCLOSE TO OR DUPLICATE FOR OTHERS EXCEPT AS AUTHORIZED BY SAMSUNG.

DDR SO-DIMM #1

Height : 9.2mm (Reverse)

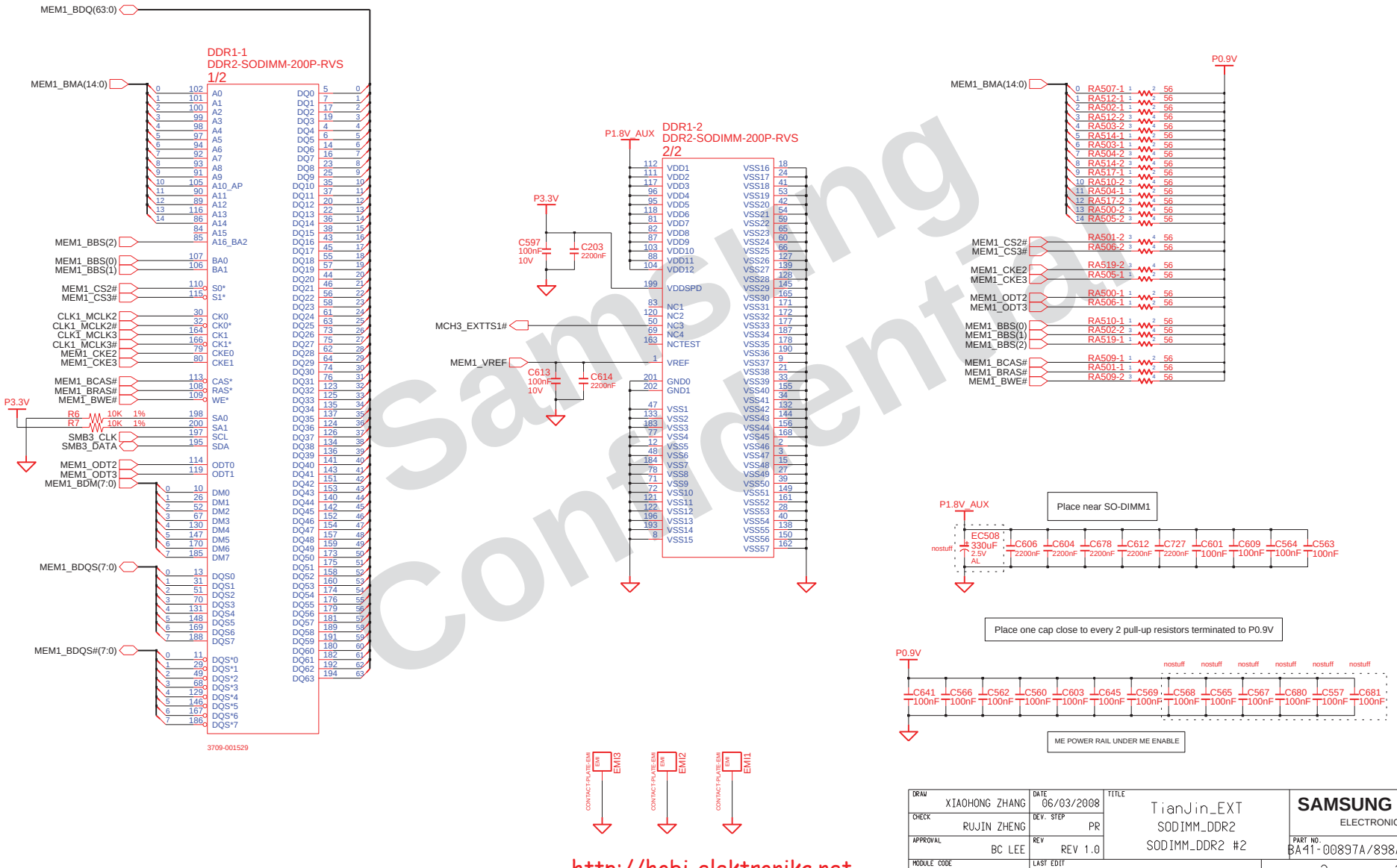

Samsung Confidential

http://hobi-elektronika.net

DRAW XIAOHONG ZHANG	DATE 06/03/2008	TITLE TianJin_EXT SODIMM_DDR2 SODIMM_DDR2 #2	SAMSUNG ELECTRONICS
CHECK RUJIN ZHENG	DEV. STEP PR		
APPROVAL BC LEE	REV REV 1.0		PART NO. BA41-00897A/898A
MODULE CODE	LAST EDIT June 03, 2008 11:43:58 AM		PAGE 2 OF 2

SAMSUNG PROPRIETARY
THIS DOCUMENT CONTAINS CONFIDENTIAL
PROPRIETARY INFORMATION THAT IS
SAMSUNG ELECTRONICS CO'S PROPERTY.
DO NOT DISCLOSE TO OR DUPLICATE FOR OTHERS
EXCEPT AS AUTHORIZED BY SAMSUNG.

Internal VR Strap

INTVRMEN	Pull up
VccSus1_05, VccSus1_5, VccCL1_5	
VccLAN1_05, VccCL1_05	

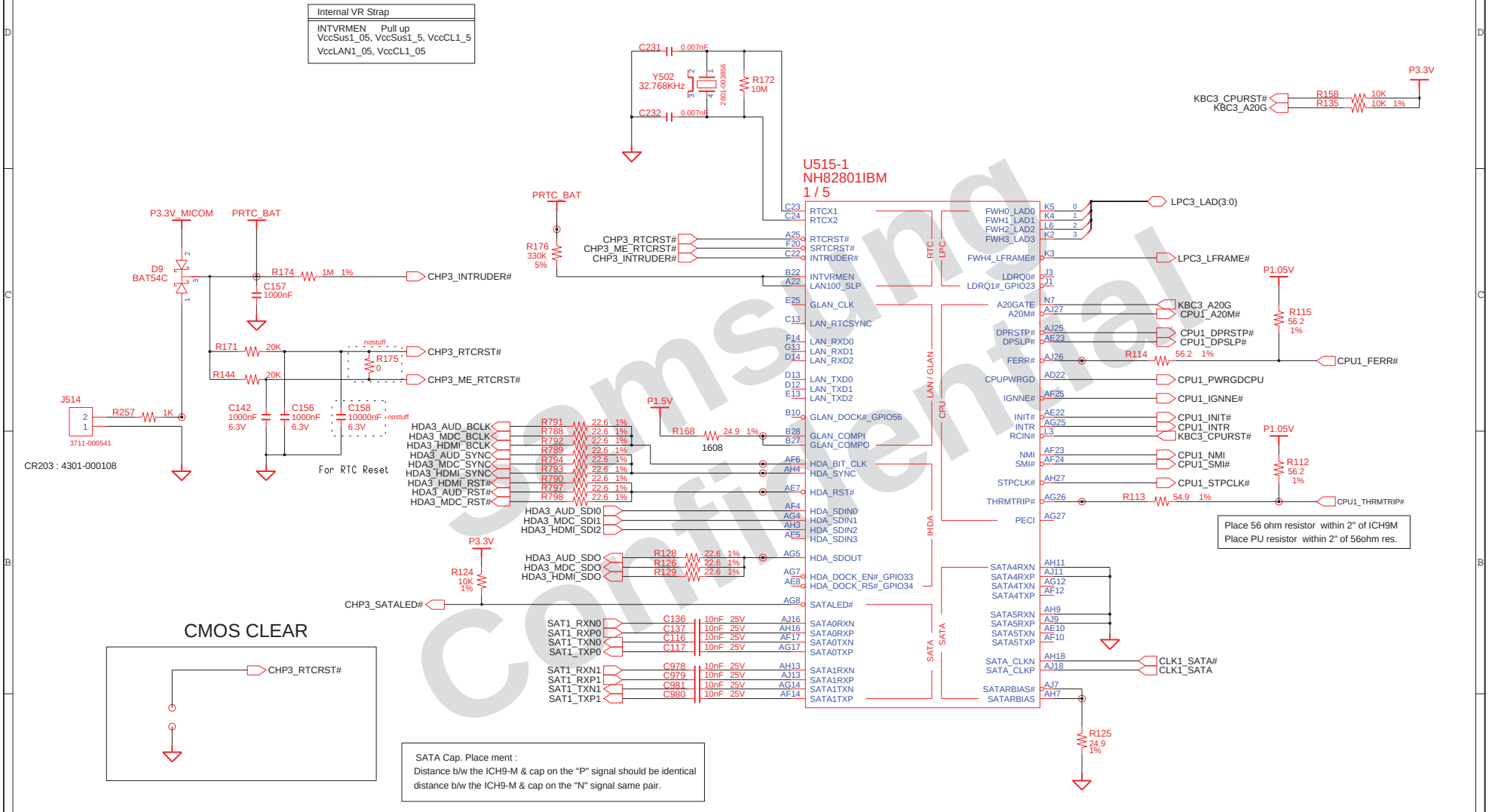

Samsung Confidential

DRAW: XIAOHONG ZHANG	DATE: 06/03/2008	TITLE: TianJin_EXT ICH_9M_B ICH9-M (1/5)	SAMSUNG ELECTRONICS
CHECK: RUJIN ZHENG	DEV. STEP: PR		
APPROVAL: BC LEE	REV: REV 1.0		PART NO. BA41-00897A/898A
MODULE CODE	LAST EDIT: June 03, 2008 11:43:58 AM		PAGE 1 OF 5

http://hobi-elektronika.net

SAMSUNG PROPRIETARY
THIS DOCUMENT CONTAINS CONFIDENTIAL
PROPRIETARY INFORMATION THAT IS
SAMSUNG ELECTRONICS CO'S PROPERTY.
DO NOT DISCLOSE TO OR DUPLICATE FOR OTHERS
EXCEPT AS AUTHORIZED BY SAMSUNG.

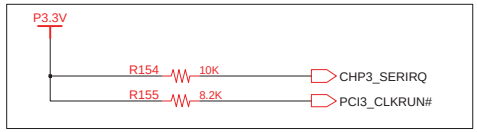

LPC option ; These are used with LPC

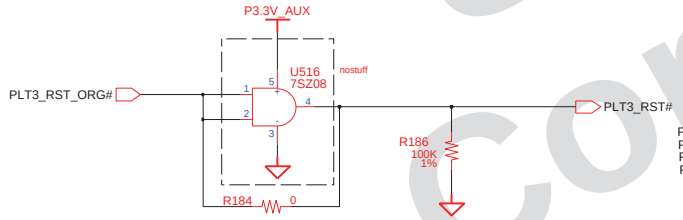

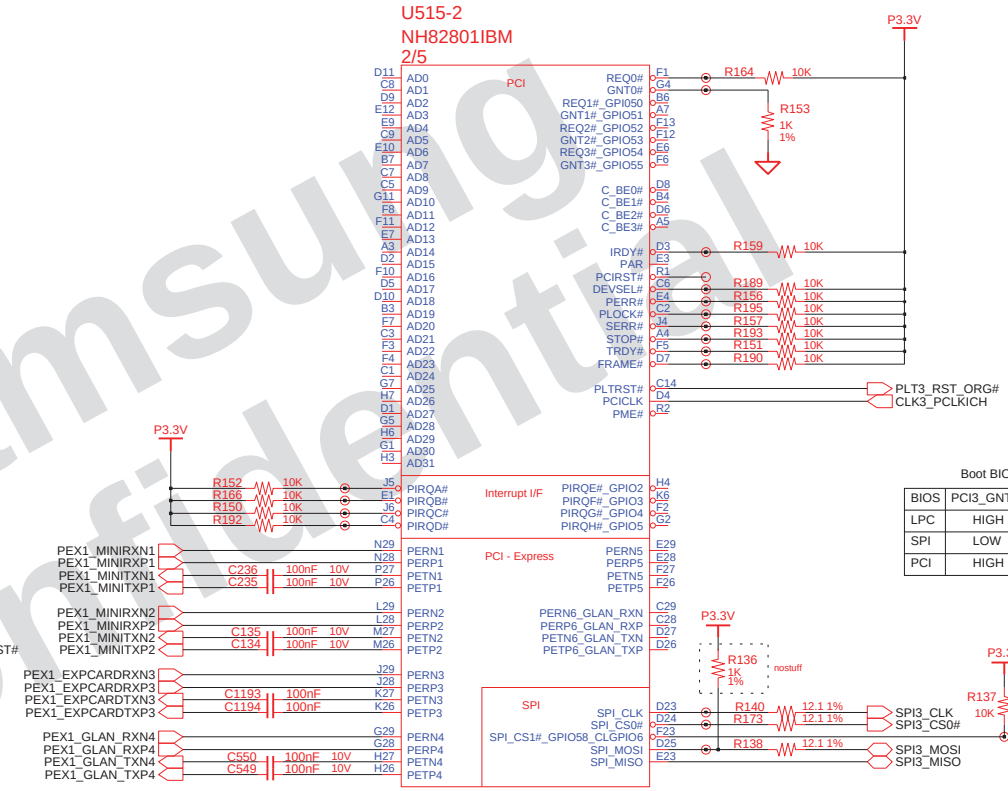

Boot BIOS Select

BIOS	PCI3_GNT0#	SPI3_CS1#
LPC	HIGH	HIGH
SPI	LOW	HIGH
PCI	HIGH	LOW

AC caps : PCIE need to be within 250mils of the driver
Resistor for Test : Place Stuffing Option to minimize stubs

Samsung Confidential

http://hobi-elektronika.net

DRAW: XIAOHONG ZHANG	DATE: 06/03/2008	TITLE: TianJin_EXT ICH_9M_B ICH9-M (2/5)	SAMSUNG ELECTRONICS
CHECK: RUJIN ZHENG	DEV. STEP: PR		
APPROVAL: BC LEE	REV: REV 1.0		PART NO. BA41-00897A/898A
MODULE CODE: undefined	LAST EDIT: June 03, 2008 11:43:58 AM		PAGE 2 OF 5

SAMSUNG PROPRIETARY
THIS DOCUMENT CONTAINS CONFIDENTIAL
PROPRIETARY INFORMATION THAT IS
SAMSUNG ELECTRONICS CO'S PROPERTY.
DO NOT DISCLOSE TO OR DUPLICATE FOR OTHERS
EXCEPT AS AUTHORIZED BY SAMSUNG.

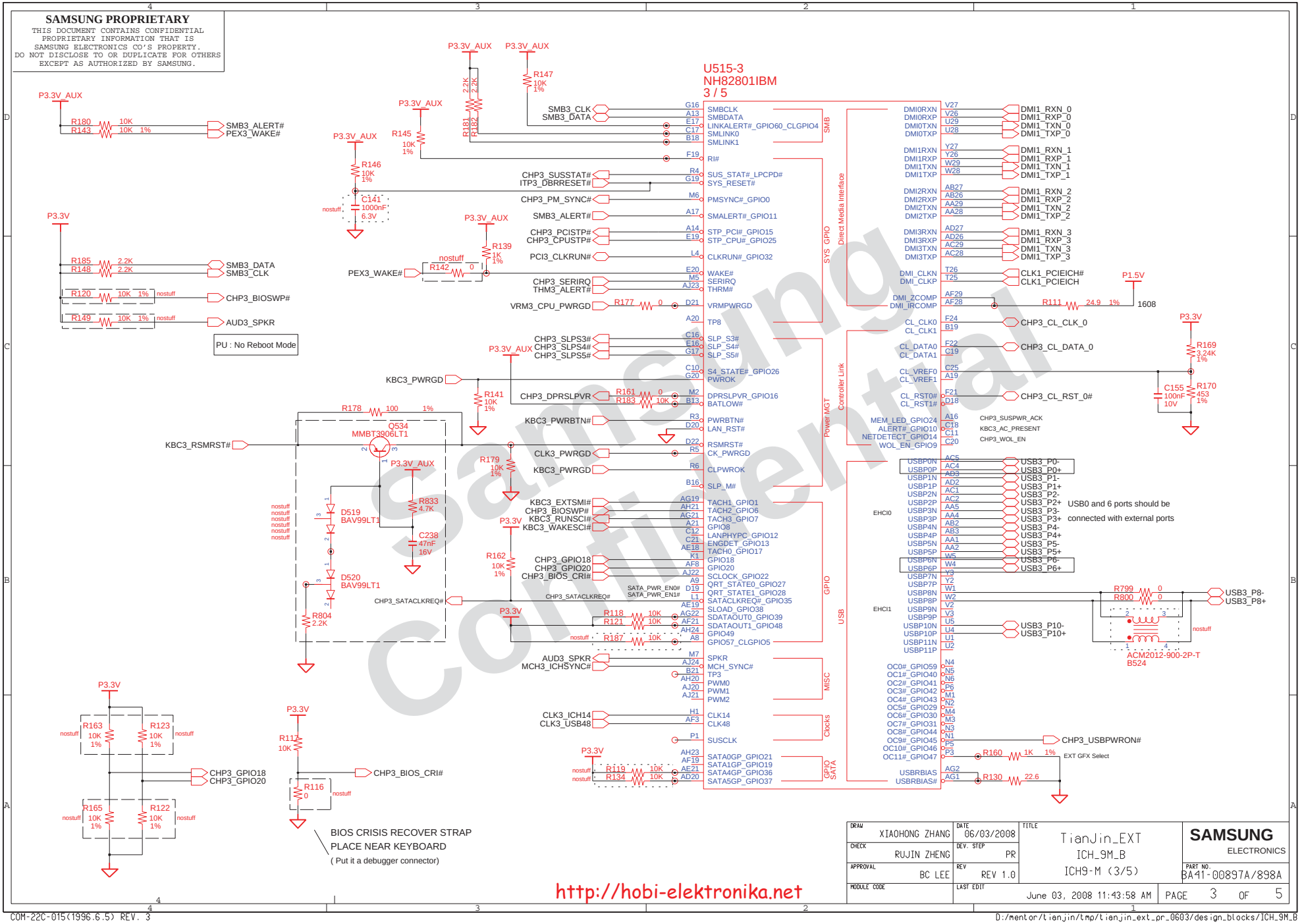

SAMSUNG PROPRIETARY
THIS DOCUMENT CONTAINS CONFIDENTIAL PROPRIETARY INFORMATION THAT IS SAMSUNG ELECTRONICS CO'S PROPERTY. DO NOT DISCLOSE TO OR DUPLICATE FOR OTHERS EXCEPT AS AUTHORIZED BY SAMSUNG.

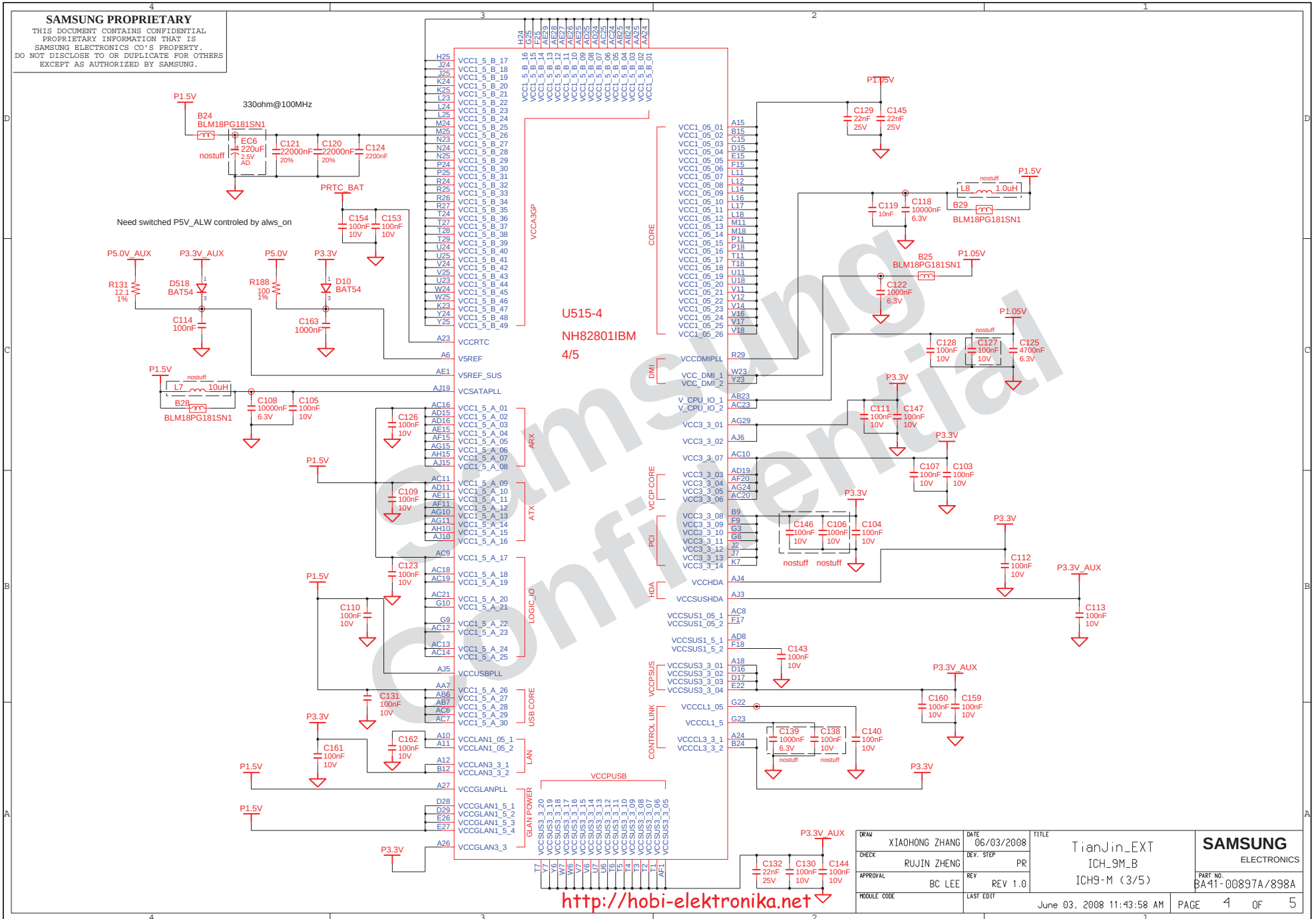

DRAW: XIAOHONG ZHANG	DATE: 06/03/2008	TITLE: TianJin_EXT ICH_9M_B ICH9-M (3/5)	SAMSUNG ELECTRONICS
CHECK: RUJIN ZHENG	DEV. STEP: PR		PART NO. BA41-00897A/898A
APPROVAL: BC LEE	REV: REV 1.0		
MODULE CODE	LAST EDIT: June 03, 2008 11:43:58 AM	PAGE 4 OF 5	

SAMSUNG PROPRIETARY
THIS DOCUMENT CONTAINS CONFIDENTIAL
PROPRIETARY INFORMATION THAT IS
SAMSUNG ELECTRONICS CO'S PROPERTY.
DO NOT DISCLOSE TO OR DUPLICATE FOR OTHERS
EXCEPT AS AUTHORIZED BY SAMSUNG.

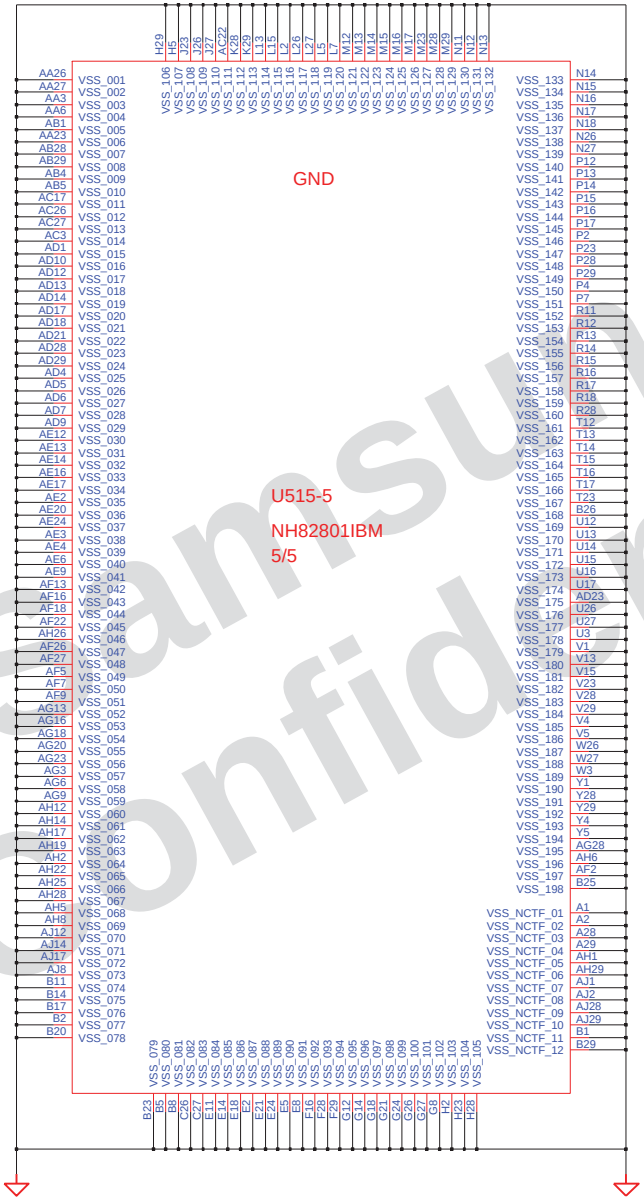

Samsung Confidential

http://hobi-elektronika.net

DRAW: XIAOHONG ZHANG	DATE: 06/03/2008	TITLE: TianJin_EXT ICH_9M_B ICH9-M (5/5)	SAMSUNG ELECTRONICS
CHECK: RUJIN ZHENG	DEV. STEP: PR		PART NO. BA41-00897A/898A
APPROVAL: BC LEE	REV: REV 1.0		
MODULE CODE	LAST EDIT: June 03, 2008 11:43:58 AM	PAGE 5 OF 5	

SAMSUNG PROPRIETARY
THIS DOCUMENT CONTAINS CONFIDENTIAL
PROPRIETARY INFORMATION THAT IS
SAMSUNG ELECTRONICS CO'S PROPERTY.
DO NOT DISCLOSE TO OR DUPLICATE FOR OTHERS
EXCEPT AS AUTHORIZED BY SAMSUNG.

BIOS ROM change to 1107-001600 16Mbit

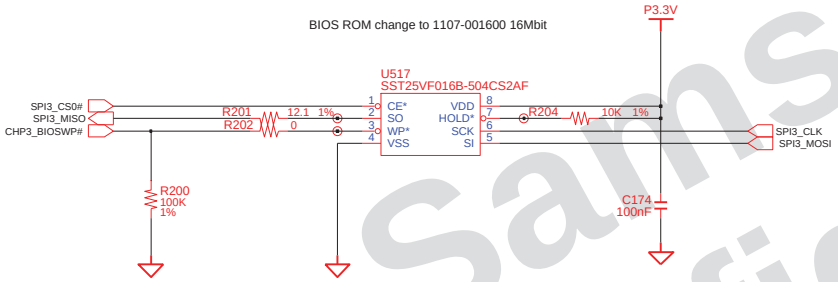

02	VERIFY REAL MODE
03	DISABLE NMI
04	GET CPU TYPE
06	INIT. SYSTEM H/W
08	INIT. CHIPSET REG.
09	SET IN POST FLAG
0A	INIT CPU.REG
0B	CPU CACHE ON
0C	INIT.CACHE TO POST
OE	INIT. I/O VALUE
0F	ENABLE THE L-BUS IDE
10	INIT. POWER MANAGER
11	LOAD ALTERNATE REG.
13	PCI BUS MASTER RESET WITH INITIAL POST VALUE
14	INIT. KEYBOARD CONTROLLER
16	CHECK CHECKSUM
18	8254 TIMER INIT.
1A	8237 DMA CONTROLLER INIT.
1C	RESET INTERRUP CONTROLLER
20	TEST DRAM REFRESH
22	TEST 8742 KEYBOARD CONTROLLER
24	SET ES SEGMENT REG. TO 4GB
26	ENABLE A20
28	AUTO SIZING DRAM
32	COMPUTE THE CPU SPEED
34	TESET CMOS RAM
38	SHADOW SYSTEM BIOS ROM
3A	AUTO SIZING CACHE
3C	CONFIGURE ADVANCED CHIPSET REG.
3D	LOAD ALTER REG. WITH CMOS VALUE
42	INIT. INTERRUPT VECTOR
44	INIT. BIOS INTERRUPT
46	CHECK ROM COPYRIGHT NOTICE
47	INIT. I20 SUPPORT IF INSTALLED
48	CHECK VIDEO CONFIGURE AGAINST CMOS
49	INIT. PCI BUS AND DEVICE
4A	INIT. ALL VIDEO BIOS ROM
4C	SHADOW VIDEO BIOS ROM
50	DISPLAY CPU TYPE AND SPEED
52	TEST KEYBOARD
54	SET KEYCLICK IF ENABLED
56	ENABLE KEYBOARD
58	TEST FOR UNEXPECTED INTERRUPTS
5A	DISPLAY " PRESS ..... SETUP"
5C	TEST RAM GETWEEN 512K AND 640K
60	TEST EXTENDED MEMORY
62	TEST EXTENDED MEMORY ADDRESS LINE
64	JUMP TO USER PATCH 1
66	CONFIGURE ADVANCE CACHE REG.
6A	DISPLAY EXTERNAL CACHE SIZE
6C	DISPLAY SHADOW MESSAGE
6E	DISPLAY NON-DISPOSABLE SEGMENT
70	DISPLAY ERROR MESSAGE
72	CHECK FOR CONFIGURATION ERROR
74	TEST REAL-TIME CLOCK
76	CHECK FOR KEYBOARD EERROR
7C	SETUP HARDWARE INTERRUPT VECTOR
7E	TEST COPROCESSER IF PRESENT
80	DISABLE ON-BOARD I/O PORT
82	DETECT AND INSTALL EXT.RS232C
84	DETECT AND INSTALL EXT.PARALLEL
86	RE-INIT. ON-BOARD I/O PORT
88	INIT. BIOS DATA ROM
8A	INIT.EXTENDED BIOS DATA AREA
8C	INIT. FDD CONTROLLER
9A	SHADOW OPTION ROMS
9C	SETUP POWER MANAGEMENT
9E	ENABLE H/W INTERRUPT
A0	SET TIME OF DAY
A4	INIT. TYPEMATIC RATE
A8	ERASE F2 PROMPT
AA	SCAN FOR F2 KEY STROKE
AC	ENTER SETUP
AE	CLEAR IN POST FLAG
B0	CHECK FOR ERRORS
B2	POST DONE-PREPARE TO BOOT O/S
B4	ONE BEEP
B6	CHECK PASSWORD (OPTION)
B7	ACPI INIT
BA	DMI INIT
BE	CLEAR SCREEN
C0	TRY BOOT WITH INT19
D0	INTERRUPT HANDLER ERROR
D2	UNKNOWN INTERRUPT ERROR
D4	PENDING INTERRUPT ERROR
D6	SHUTDOWN 5
D8	SHUTDOWN ERROR
DA	EXTENDED BLOCK MOVE
DC	SHUTDOWN 10
89	ENABLE NMI
90	INIT. HDD CONTROLLER
91	INIT. LOCAL BUS HDD CONTROLLER
92	JUMP TO USER PATCH 2
94	DISABLE A20 ADDRESS LINE
96	CLEAR HUGE ES SEGMENT REG.
98	SEARCH FOR OPTION ROMS

Samsung Confidential

http://hobi-elektronika.net

DRAW XIAOHONG ZHANG	DATE 06/03/2008	TITLE TianJin_EXT SPI_BIOS_ROM SPI_BIOS_ROM	SAMSUNG ELECTRONICS
CHECK RUJIN ZHENG	DEV. STEP PR		PART NO. BA41-00897A/898A
APPROVAL BC LEE	REV REV 1.0		
MODULE CODE	LAST EDIT June 03, 2008 11:43:58 AM		PAGE 1 OF 1

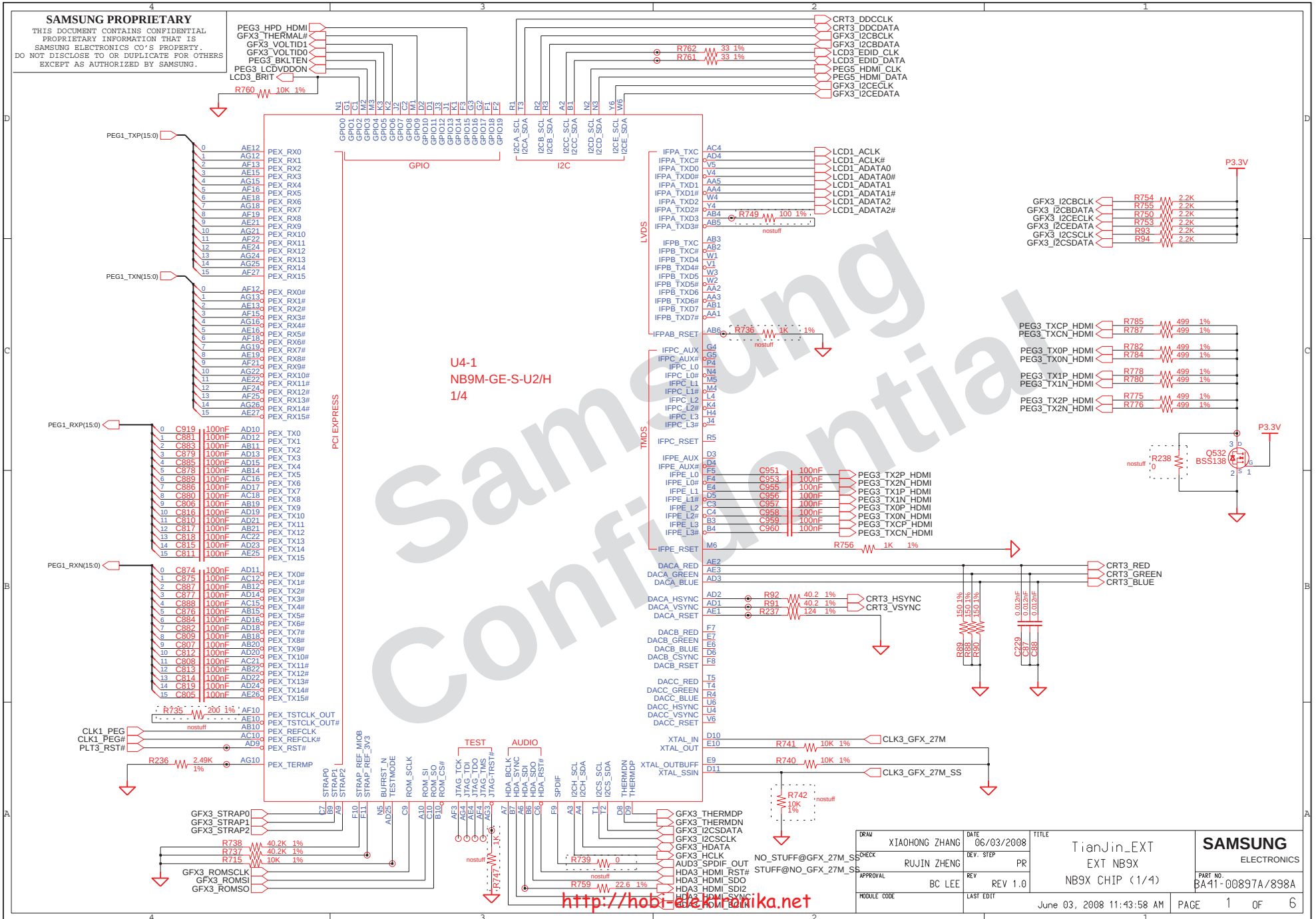

Samsung Confidential
http://hobi-elektronika.net

SAMSUNG PROPRIETARY
THIS DOCUMENT CONTAINS CONFIDENTIAL
PROPRIETARY INFORMATION THAT IS
SAMSUNG ELECTRONICS CO'S PROPERTY.
DO NOT DISCLOSE TO OR DUPLICATE FOR OTHERS
EXCEPT AS AUTHORIZED BY SAMSUNG.

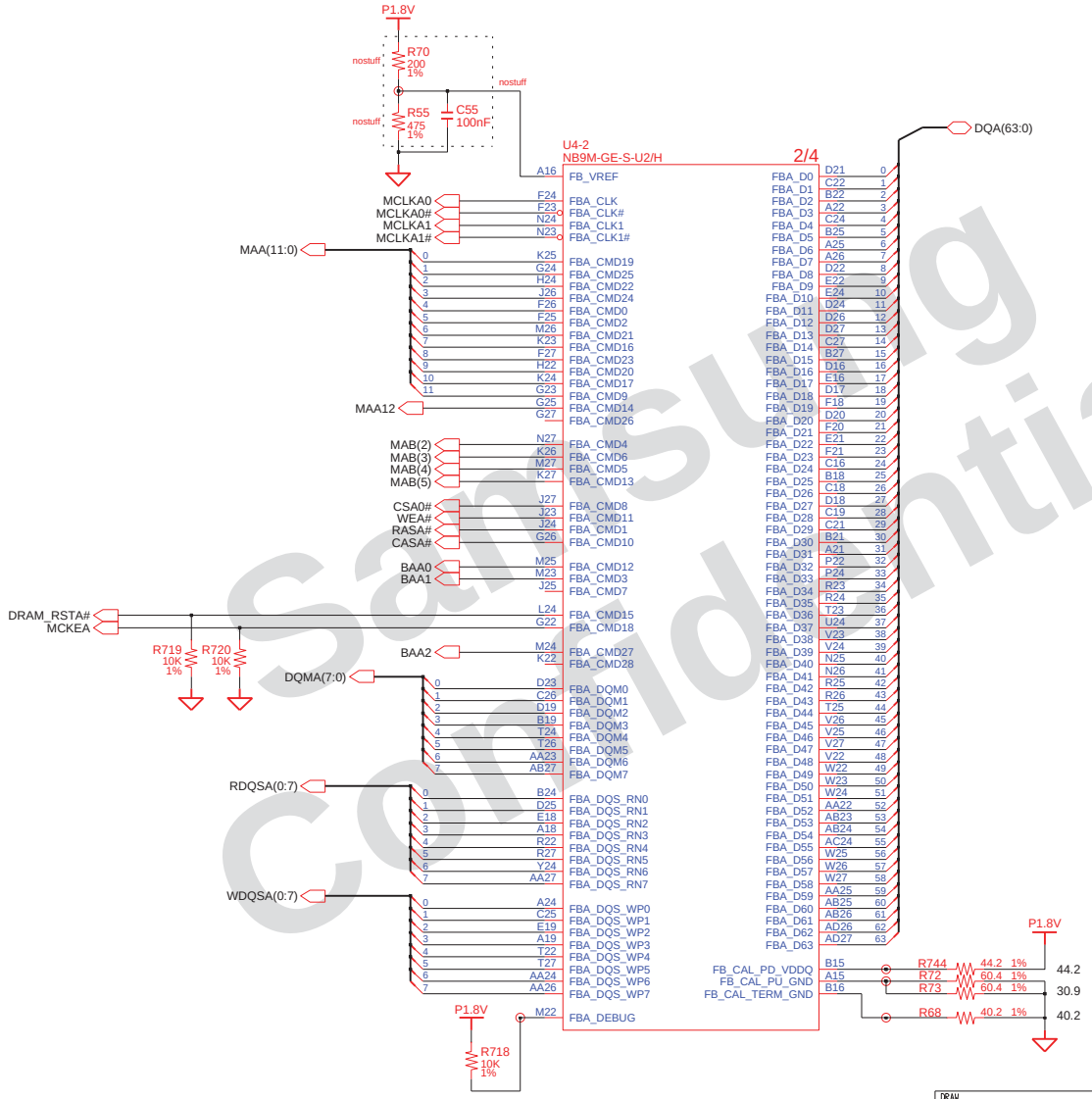

Samsung Confidential

DRAW XIAOHONG ZHANG	DATE 06/03/2008	TITLE TianJin_EXT EXT NB9X NB9X CHIP (2/4)	SAMSUNG ELECTRONICS
CHECK RUJIN ZHENG	DEV. STEP PR		
APPROVAL BC LEE	REV REV 1.0		PART NO. BA41-00897A/898A
MODULE CODE	LAST EDIT June 03, 2008 11:43:58 AM		PAGE 2 OF 6

http://hobi-elektronika.net

SAMSUNG PROPRIETARY
THIS DOCUMENT CONTAINS CONFIDENTIAL
PROPRIETARY INFORMATION THAT IS
SAMSUNG ELECTRONICS CO'S PROPERTY.
DO NOT DISCLOSE TO OR DUPLICATE FOR OTHERS
EXCEPT AS AUTHORIZED BY SAMSUNG.

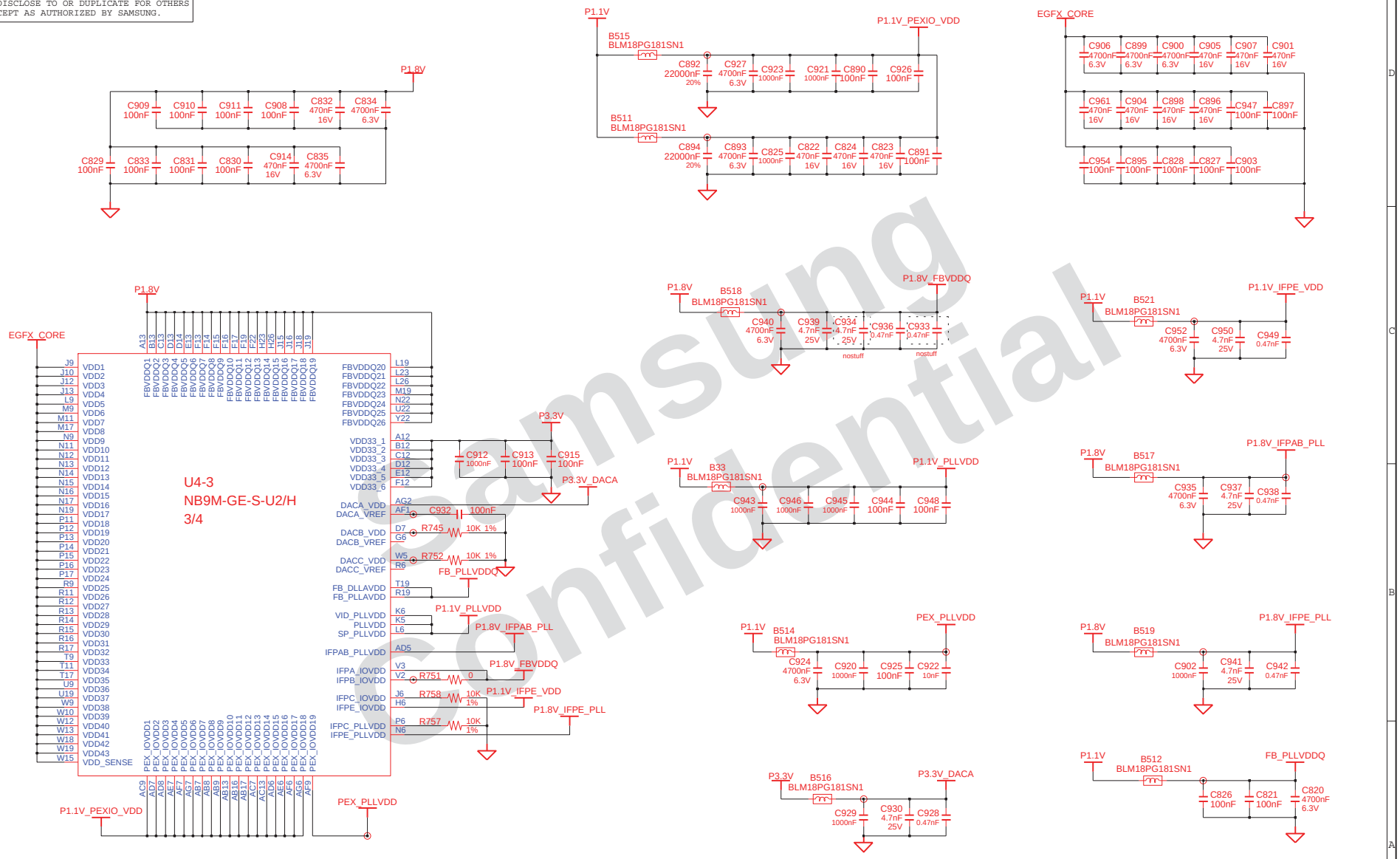

Samsung Confidential

DRAW XIAOHONG ZHANG	DATE 06/03/2008	TITLE TianJin_EXT EXT NB9X NB9X CHIP (3/4)	SAMSUNG ELECTRONICS
CHECK RUJIN ZHENG	DEV. STEP PR		
APPROVAL BC LEE	REV REV 1.0		PART NO. BA41-00897A/898A
MODULE CODE	LAST EDIT June 03, 2008 11:43:58 AM		PAGE 3 OF 6

http://hobi-elektronika.net

SAMSUNG PROPRIETARY
THIS DOCUMENT CONTAINS CONFIDENTIAL
PROPRIETARY INFORMATION THAT IS
SAMSUNG ELECTRONICS CO'S PROPERTY.
DO NOT DISCLOSE TO OR DUPLICATE FOR OTHERS
EXCEPT AS AUTHORIZED BY SAMSUNG.

Pin	Description	Activate
GPIO(0)	DVI detect	High
GPIO(1)	TV detect	Low
GPIO(2)	PWM Brigtness control	High
GPIO(3)	LCD VDD on enable	High
GPIO(4)	Backlight on/off	High
GPIO(5)	GPU VID0	High = 1.0V, Low = 1.1V
GPIO(6)	GPU VID1	NC
GPIO(7)	GPU VID2 or Mem VID	NC
GPIO(8)	Thermal diode Alert	LOW
GPIO(9)	Fan control	NC
GPIO(10)	Memory VREF switch	NC
GPIO(11)	SLI Rater sync	HIGH
GPIO(12)	AC Power dection input	NC
GPIO(13)	Power supply control	NC
GPIO(14)	Power supply control	NC
GPIO(15)	HDMI Detect	High
GPIO(16)	DP Detect	High

Strap option	Bit 3	Bit 2	Bit 1	Bit 0
ROM_SO	XCLK_27	TVMODE[2]	TVMODE[1]	TVMODE[0]
ROM_SCLK	DEVID[4]	VENID	CLK_CFG	PLL_TERM
ROM_SI	RAMCFG[3]	RAMCFG[2]	RAMCFG[1]	RAMCFG[0]
STRAP2	DEVID[3]	DEVID[2]	DEVID[1]	DEVID[0]
STRAP1	PADCFG[3]	PADCFG[2]	PADCFG[1]	PADCFG[0]
STRAP0	USER[3]	USER[2]	USER[1]	USER[0]
Resistor value	PU to VDD	PD to GND	XCLK27 = 1 27MHz	
5K ohm	1000	0000	RAM CFG (SEC)	
10 Kohm	1001	0001	0011 512Mbit 0111 256Mbit	
15K ohm	1010	0010	USER[3:0]=1111 for EDID	
20K ohm	1011	0011	PADCFG[3:0]=0001 of NP	
25K ohm	1100	0100	NB9M-GS:0x06E9 (01001)	
30K ohm	1101	0101	NB9M-GE:0x06E8 (01000)	
35K ohm	1110	0110	NB9P-GS:0x0649 (01001)	
45K ohm	1111	0111	NB9P-GE:0x0406 (00110)	
			NB9P-GE2:0x0??? (0????)	

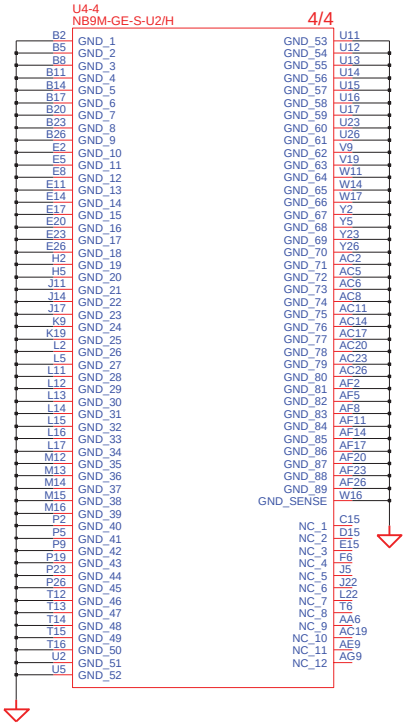

	Bit3	Bit2	Bit1	Bit0	
ROMSO	1	1	1	1	
SCLK	0	0	1	0	
SI	0	0	0	1	512Mbit
Strap2	1	0	0	1	9M-GS
	1	0	0	0	9M-GE
Strap1	0	0	0	1	
Strap0	1	1	1	1	

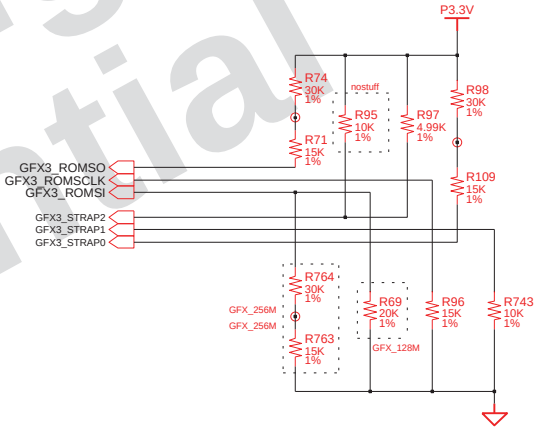

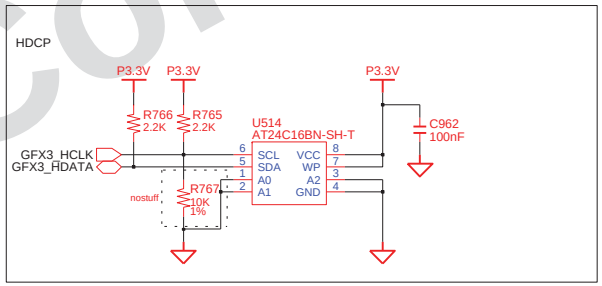

PU is for I2C ROM (AT24C16B, A0~A2 = 000)
PD is for Crypto ROM

Samsung Confidential

http://hobi-elektronika.net

DRAW XIAOHONG ZHANG	DATE 06/03/2008	TITLE TianJin_EXT EXT NB9X NB9X CHIP (4/4)	SAMSUNG ELECTRONICS
CHECK RUJIN ZHENG	DEV. STEP PR		
APPROVAL BC LEE	REV REV 1.0		PART NO. BA41-00897A/898A
MODULE CODE	LAST EDIT June 03, 2008 11:43:58 AM		PAGE 4 OF 6

SAMSUNG PROPRIETARY
THIS DOCUMENT CONTAINS CONFIDENTIAL
PROPRIETARY INFORMATION THAT IS
SAMSUNG ELECTRONICS CO'S PROPERTY.
DO NOT DISCLOSE TO OR DUPLICATE FOR OTHERS
EXCEPT AS AUTHORIZED BY SAMSUNG.

A-channel

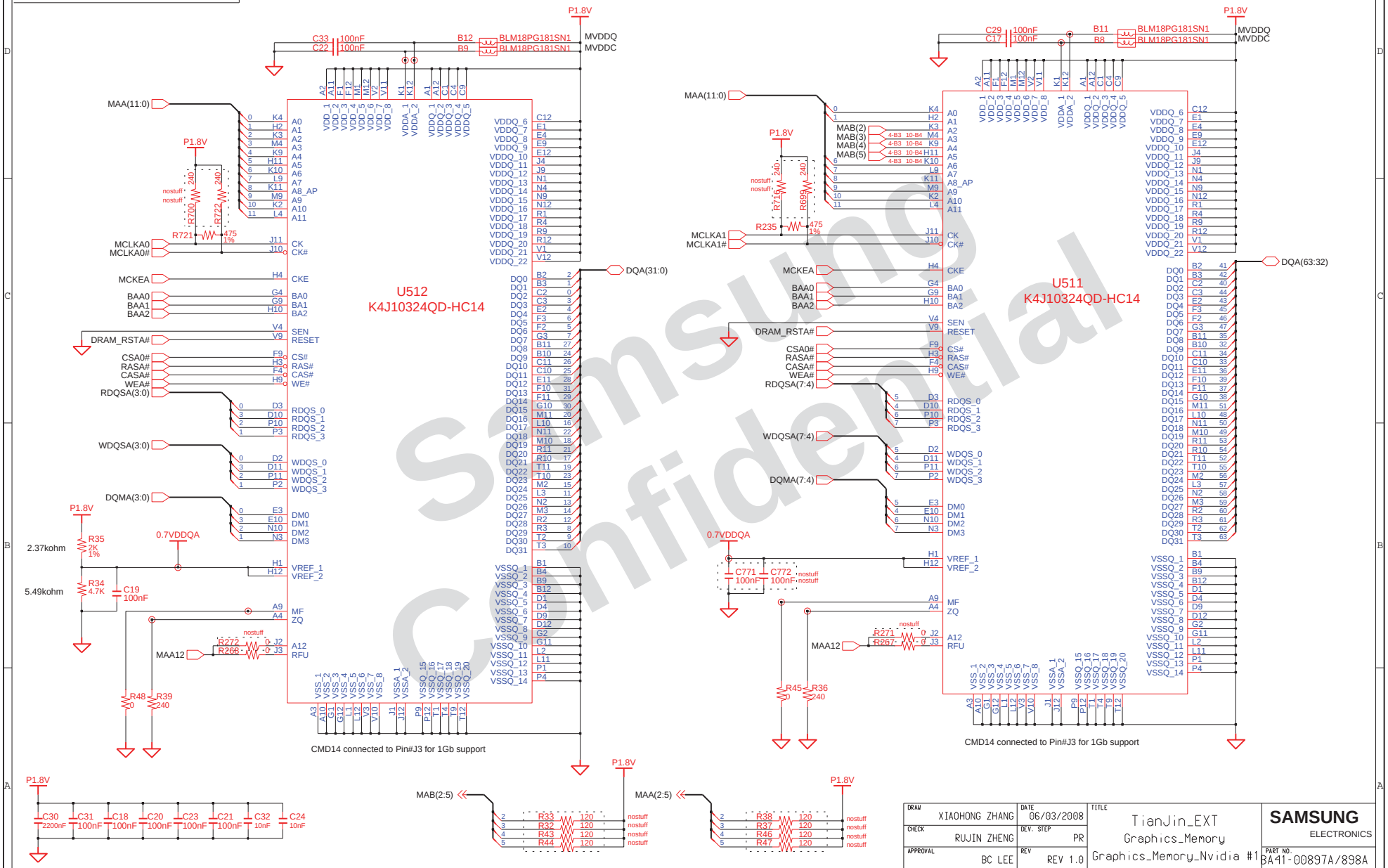

Samsung Confidential

http://hobi-elektronika.net

DRAW XIAOHONG ZHANG	DATE 06/03/2008	TITLE TianJin_EXT Graphics_Memory Graphics_Memory_Nvidia #1	SAMSUNG ELECTRONICS
CHECK RUJIN ZHENG	DEV. STEP PR		
APPROVAL BC LEE	REV REV 1.0		PART NO. BA41-00897A/898A
MODULE CODE	LAST EDIT June 03, 2008 11:43:58 AM		PAGE 1 OF 3

SAMSUNG PROPRIETARY
THIS DOCUMENT CONTAINS CONFIDENTIAL
PROPRIETARY INFORMATION THAT IS
SAMSUNG ELECTRONICS CO'S PROPERTY.
DO NOT DISCLOSE TO OR DUPLICATE FOR OTHERS
EXCEPT AS AUTHORIZED BY SAMSUNG.

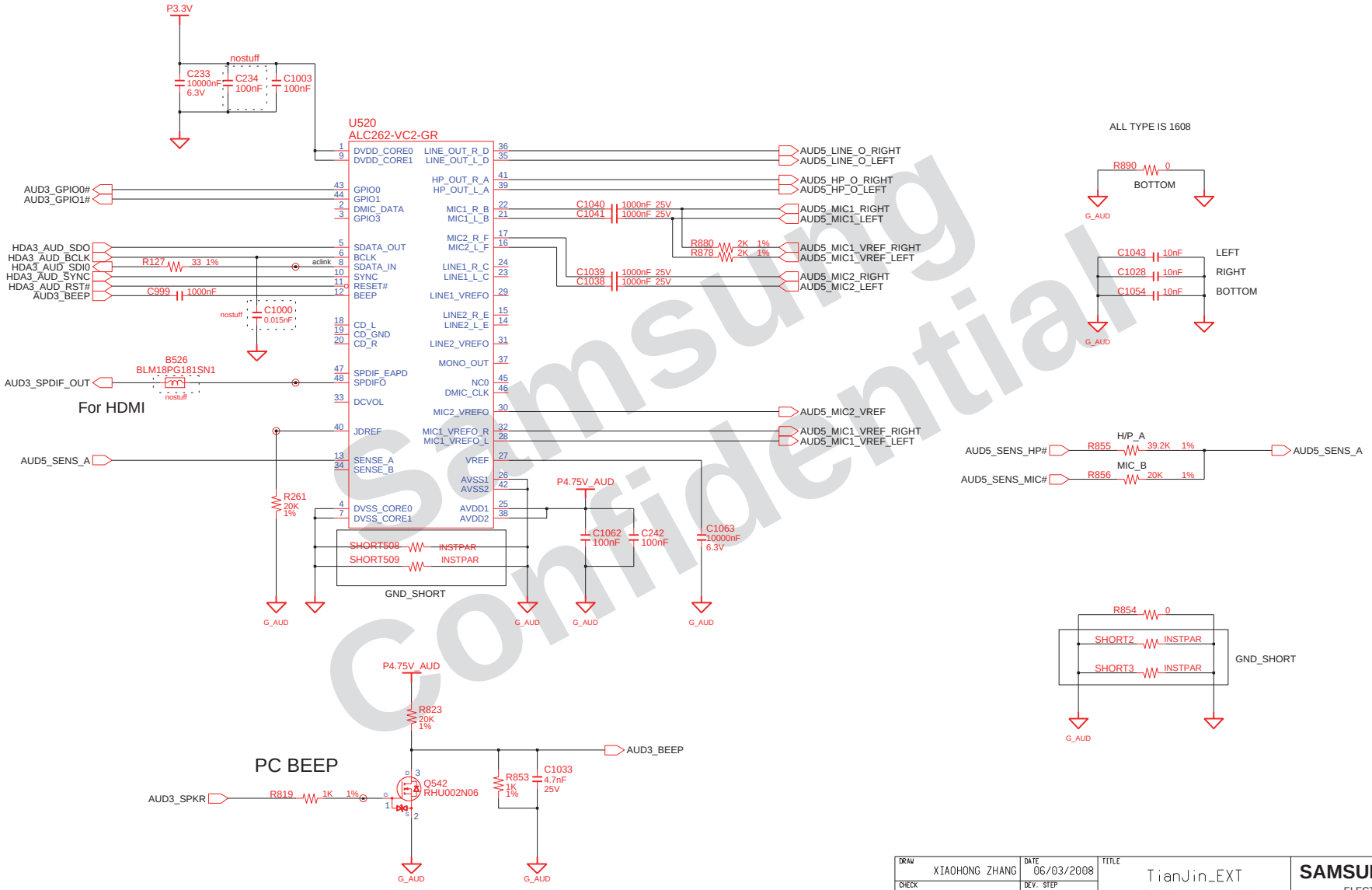

Samsung Confidential

DRAW XIAOHONG ZHANG	DATE 06/03/2008	TITLE TianJin_EXT HDA_Codec_Alc262 HDA_Codec_Alc262 #1	SAMSUNG ELECTRONICS
CHECK RUJIN ZHENG	DEV. STEP PR		
APPROVAL BC LEE	REV REV 1.0		PART NO. BA41-00897A/898A
MODULE CODE undefined	LAST EDIT June 03, 2008 11:43:58 AM		PAGE 1 OF 5

http://hobi-elektronika.net

SAMSUNG PROPRIETARY
THIS DOCUMENT CONTAINS CONFIDENTIAL
PROPRIETARY INFORMATION THAT IS
SAMSUNG ELECTRONICS CO'S PROPERTY.
DO NOT DISCLOSE TO OR DUPLICATE FOR OTHERS
EXCEPT AS AUTHORIZED BY SAMSUNG.

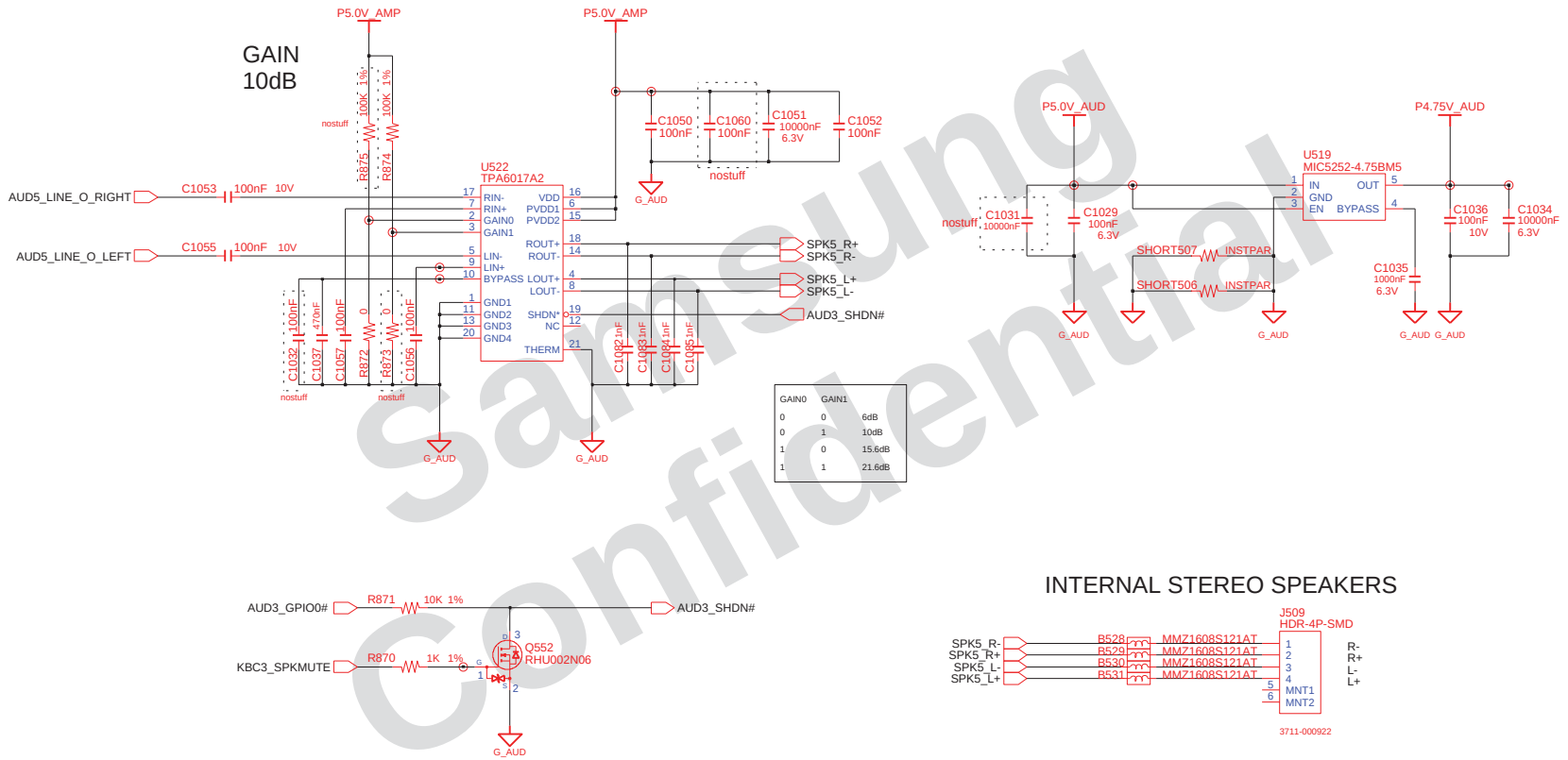

GAIN0	GAIN1	
0	0	6dB
0	1	10dB
1	0	15.6dB
1	1	21.6dB

INTERNAL STEREO SPEAKERS

Samsung Confidential

DRAW XIAOHONG ZHANG	DATE 06/03/2008	TITLE TianJin_EXT HDA_Codec_Alc262 HDA_Codec_Alc262 #2	SAMSUNG ELECTRONICS
CHECK RUJIN ZHENG	DEV. STEP PR		
APPROVAL BC LEE	REV REV 1.0		PART NO. BA41-00897A/898A
MODULE CODE	LAST EDIT June 03, 2008 11:43:58 AM		PAGE 2 OF 5

http://hobi-elektronika.net

SAMSUNG PROPRIETARY
THIS DOCUMENT CONTAINS CONFIDENTIAL
PROPRIETARY INFORMATION THAT IS
SAMSUNG ELECTRONICS CO'S PROPERTY.
DO NOT DISCLOSE TO OR DUPLICATE FOR OTHERS
EXCEPT AS AUTHORIZED BY SAMSUNG.

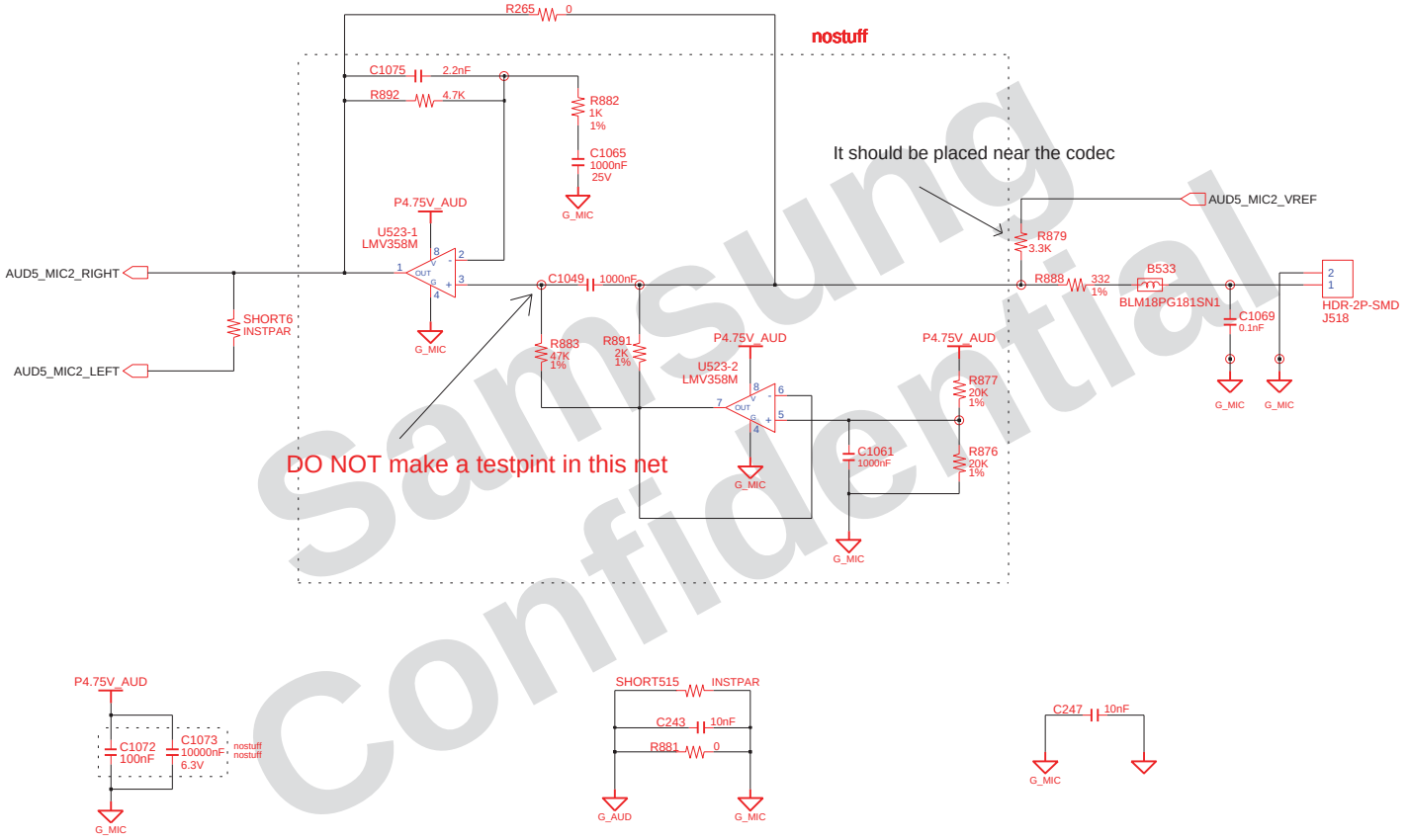

Samsung Confidential

http://hobi-elektronika.net

DRAW XIAOHONG ZHANG	DATE 06/03/2008	TITLE TianJin_EXT HDA_Codec_Alc262 HDA_Codec_Alc262 #3	SAMSUNG ELECTRONICS
CHECK RUJIN ZHENG	DEV. STEP PR		
APPROVAL BC LEE	REV REV 1.0		PART NO. BA41-00897A/898A
MODULE CODE undefined	LAST EDIT June 03, 2008 11:43:58 AM		PAGE 3 OF 5

SAMSUNG PROPRIETARY
THIS DOCUMENT CONTAINS CONFIDENTIAL
PROPRIETARY INFORMATION THAT IS
SAMSUNG ELECTRONICS CO'S PROPERTY.
DO NOT DISCLOSE TO OR DUPLICATE FOR OTHERS
EXCEPT AS AUTHORIZED BY SAMSUNG.

AUDIO POWER

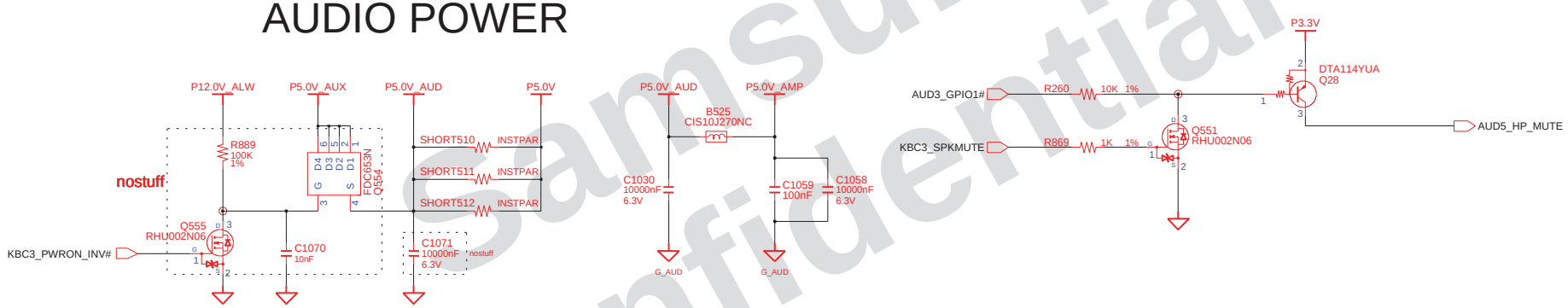

Samsung Confidential

http://hobi-elektronika.net

DRAW XIAOHONG ZHANG	DATE 06/03/2008	TITLE TianJin_EXT HDA_Codec_Alc262 HDA_Codec_Alc262 #5	SAMSUNG ELECTRONICS
CHECK RUJIN ZHENG	DEV. STEP PR		
APPROVAL BC LEE	REV REV 1.0		PART NO. BA41-00897A/898A
MODULE CODE undefined	LAST EDIT June 03, 2008 11:43:58 AM		PAGE 5 OF 5

SAMSUNG PROPRIETARY
THIS DOCUMENT CONTAINS CONFIDENTIAL
PROPRIETARY INFORMATION THAT IS
SAMSUNG ELECTRONICS CO'S PROPERTY.
DO NOT DISCLOSE TO OR DUPLICATE FOR OTHERS
EXCEPT AS AUTHORIZED BY SAMSUNG.

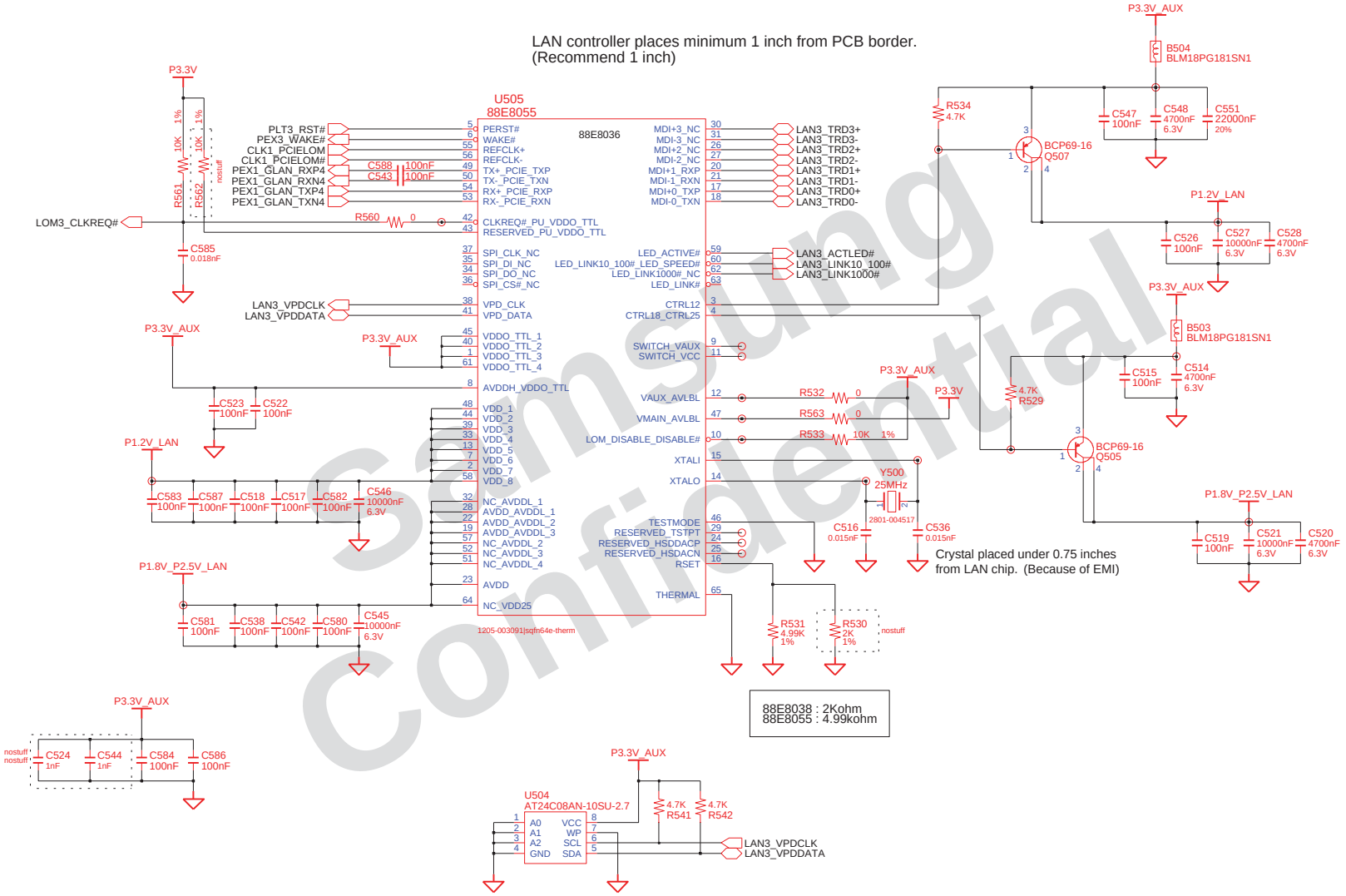

Samsung Confidential

DRAW XIAOHONG ZHANG	DATE 06/03/2008	TITLE TianJin_EXT LAN_Marvell_8055 LAN_Marvell_8055	SAMSUNG ELECTRONICS
CHECK RUJIN ZHENG	DEV. STEP PR		
APPROVAL BC LEE	REV REV 1.0		PART NO. BA41-00897A/898A
MODULE CODE	LAST EDIT June 03, 2008 11:43:58 AM		PAGE 1 OF 2

http://hobi-elektronika.net

SAMSUNG PROPRIETARY
THIS DOCUMENT CONTAINS CONFIDENTIAL
PROPRIETARY INFORMATION THAT IS
SAMSUNG ELECTRONICS CO'S PROPERTY.
DO NOT DISCLOSE TO OR DUPLICATE FOR OTHERS
EXCEPT AS AUTHORIZED BY SAMSUNG.

The distance between LAN controller
and transformer is designed to extend less than two inches.

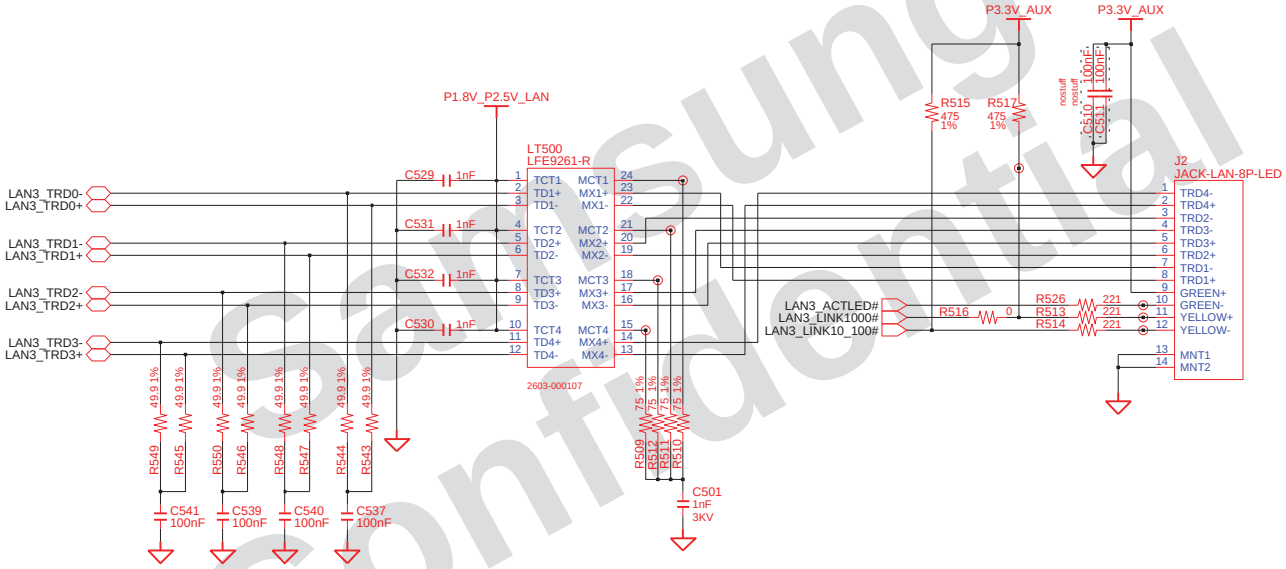

Place near to the Marvell chip.

Samsung Confidential

DRAW XIAOHONG ZHANG	DATE 06/03/2008	TITLE TianJin_EXT LAN_Marvell_8055 LAN_Marvell_8055	SAMSUNG ELECTRONICS
CHECK RUJIN ZHENG	DEV. STEP PR		
APPROVAL BC LEE	REV REV 1.0		PART NO. BA41-00897A/898A
MODULE CODE	LAST EDIT June 03, 2008 11:43:58 AM		PAGE 2 OF 2

http://hobi-elektronika.net

SAMSUNG PROPRIETARY
THIS DOCUMENT CONTAINS CONFIDENTIAL
PROPRIETARY INFORMATION THAT IS
SAMSUNG ELECTRONICS CO'S PROPERTY.
DO NOT DISCLOSE TO OR DUPLICATE FOR OTHERS
EXCEPT AS AUTHORIZED BY SAMSUNG.

MICOM RESET

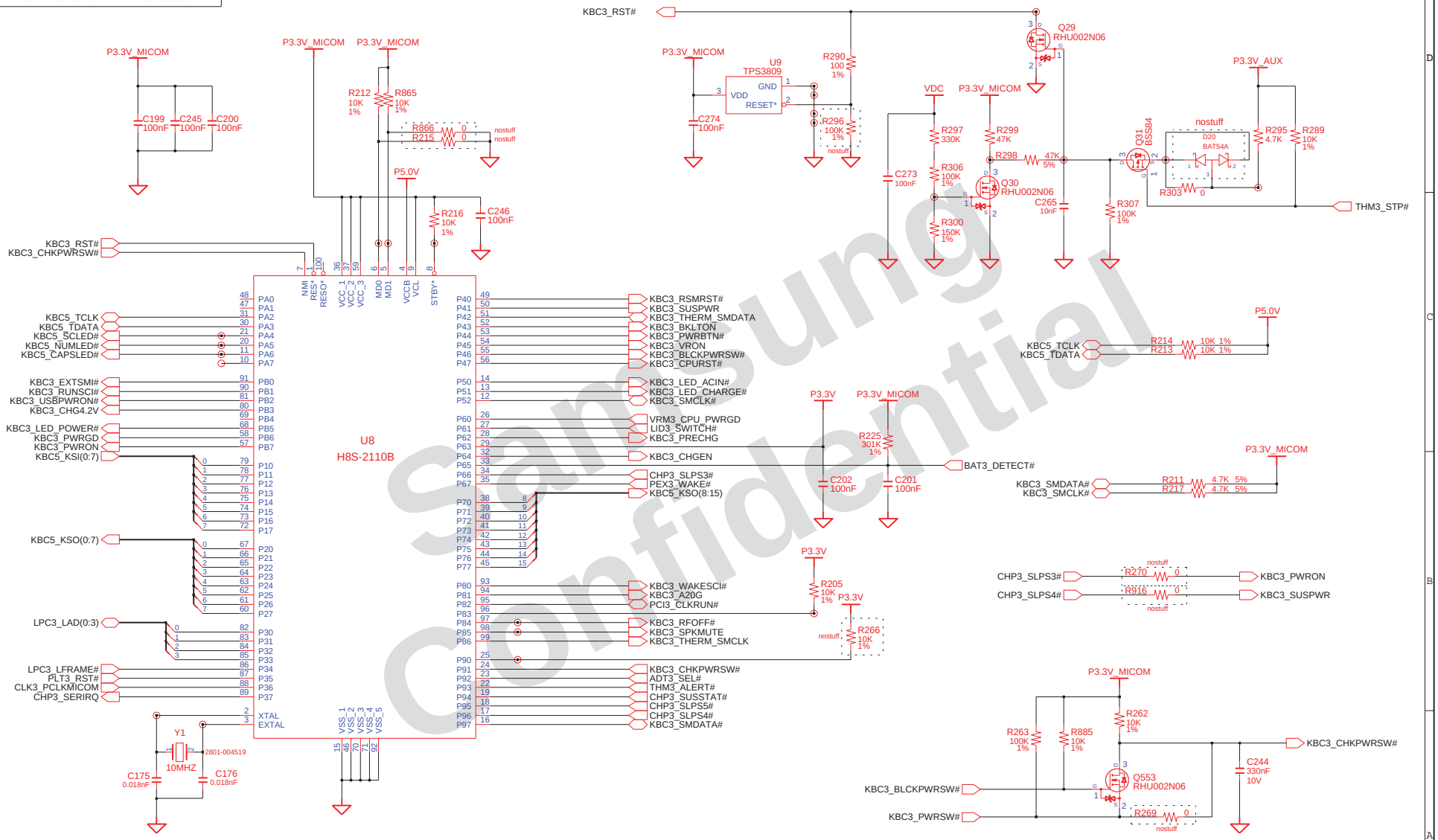

Samsung Confidential

http://hobi-elektronika.net

DRAW XIAOHONG ZHANG	DATE 06/03/2008	TITLE TianJin_EXT	SAMSUNG ELECTRONICS
CHECK RUJIN ZHENG	DEV. STEP PR	MICOM_Renesas2110_100p	
APPROVAL BC LEE	REV REV 1.0	MICOM_Renesas2110_100p	PART NO. BA41-00897A/898A
MODULE CODE	LAST EDIT June 03, 2008 11:43:58 AM		PAGE 1 OF 1

SAMSUNG PROPRIETARY
THIS DOCUMENT CONTAINS CONFIDENTIAL
PROPRIETARY INFORMATION THAT IS
SAMSUNG ELECTRONICS CO'S PROPERTY.
DO NOT DISCLOSE TO OR DUPLICATE FOR OTHERS
EXCEPT AS AUTHORIZED BY SAMSUNG.

Main to HDD

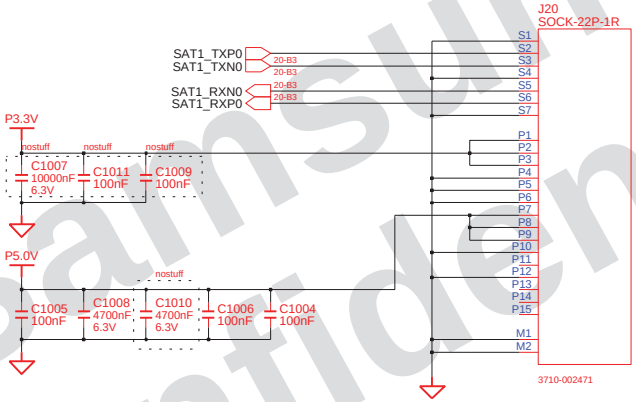

Samsung Confidential

DRAW XIAOHONG ZHANG	DATE 06/03/2008	TITLE TianJin_EXT HDD_IF_Conn HDD_IF_Conn	SAMSUNG ELECTRONICS
CHECK RUJIN ZHENG	DEV. STEP PR		
APPROVAL BC LEE	REV REV 1.0		PART NO. BA41-00897A/898A
MODULE CODE	LAST EDIT June 03, 2008 11:43:58 AM	PAGE 1 OF 1	

http://hobi-elektronika.net

SAMSUNG PROPRIETARY
THIS DOCUMENT CONTAINS CONFIDENTIAL
PROPRIETARY INFORMATION THAT IS
SAMSUNG ELECTRONICS CO'S PROPERTY.
DO NOT DISCLOSE TO OR DUPLICATE FOR OTHERS
EXCEPT AS AUTHORIZED BY SAMSUNG.

SATA ODD

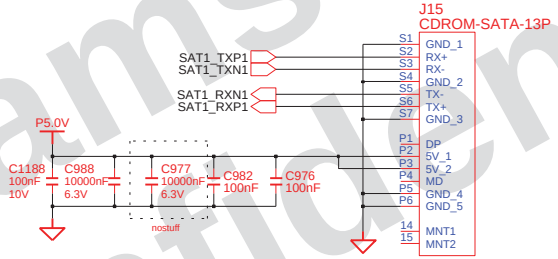

Samsung Confidential

DRAW XIAOHONG ZHANG	DATE 06/03/2008	TITLE TianJin_EXT ODD_IF_Conn ODD_IF_Conn	SAMSUNG ELECTRONICS
CHECK RUJIN ZHENG	DEV. STEP PR		
APPROVAL BC LEE	REV REV 1.0		PART NO. BA41-00897A/898A
MODULE CODE	LAST EDIT June 03, 2008 11:43:58 AM		PAGE 1 OF 1

http://hobi-elektronika.net

SAMSUNG PROPRIETARY
THIS DOCUMENT CONTAINS CONFIDENTIAL
PROPRIETARY INFORMATION THAT IS
SAMSUNG ELECTRONICS CO'S PROPERTY.
DO NOT DISCLOSE TO OR DUPLICATE FOR OTHERS
EXCEPT AS AUTHORIZED BY SAMSUNG.

2 PORT USB CONNECTOR

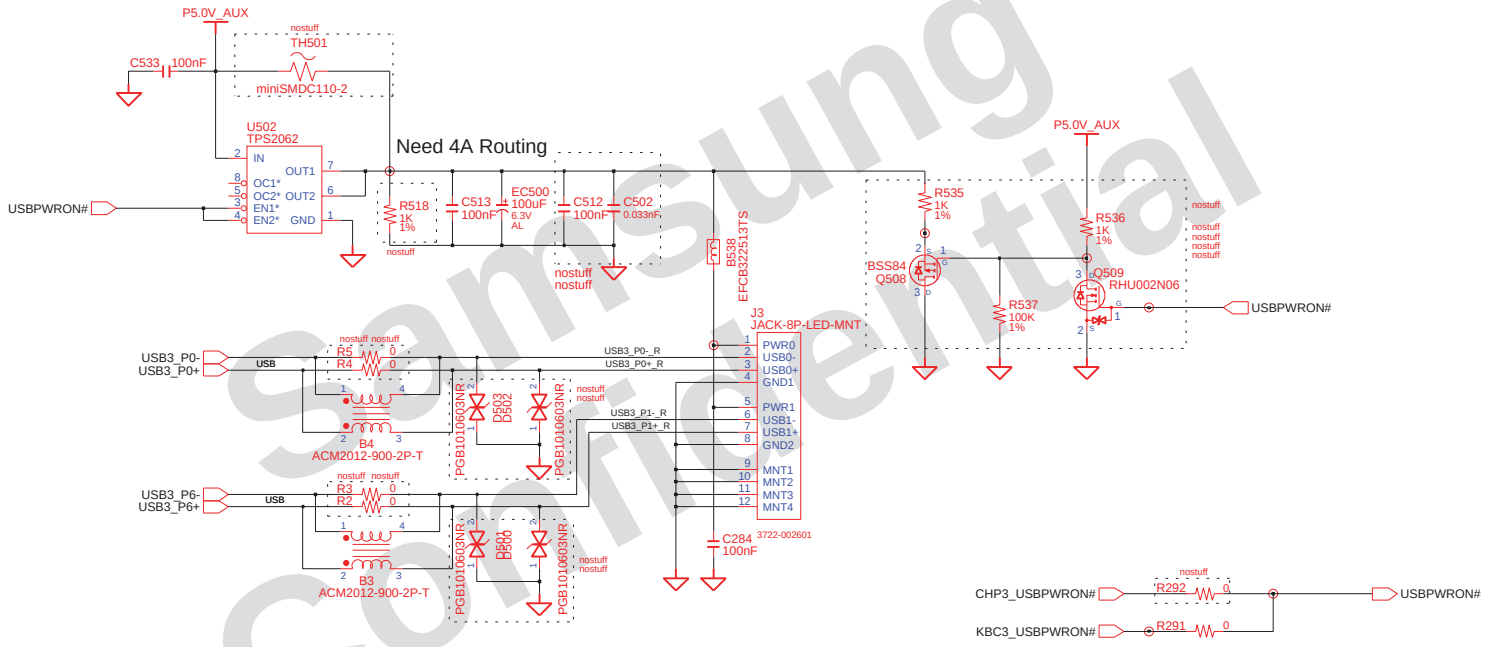

Samsung Confidential

DRAW XIAOHONG ZHANG	DATE 06/03/2008	TITLE TianJin_EXT USB_2Port USB_2Port	SAMSUNG ELECTRONICS
CHECK RUJIN ZHENG	DEV. STEP PR		
APPROVAL BC LEE	REV REV 1.0		PART NO. BA41-00897A/898A
MODULE CODE	LAST EDIT June 03, 2008 11:43:58 AM		PAGE 1 OF 1

http://hobi-elektronika.net

SAMSUNG PROPRIETARY
THIS DOCUMENT CONTAINS CONFIDENTIAL
PROPRIETARY INFORMATION THAT IS
SAMSUNG ELECTRONICS CO'S PROPERTY.
DO NOT DISCLOSE TO OR DUPLICATE FOR OTHERS
EXCEPT AS AUTHORIZED BY SAMSUNG.

MDC

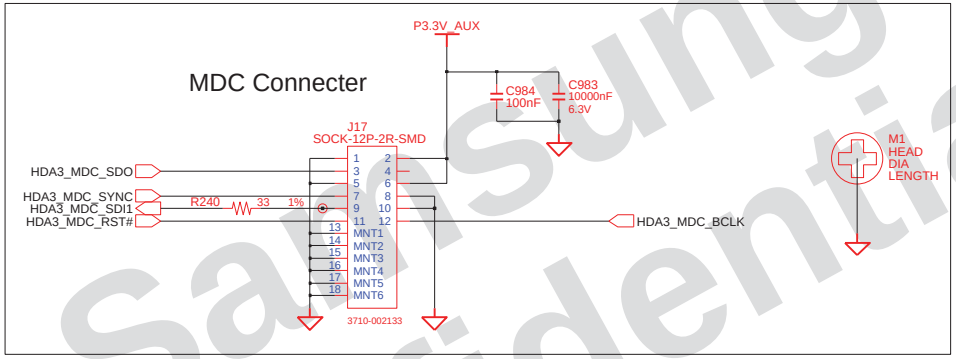

Samsung Confidential

DRAW XIAOHONG ZHANG	DATE 06/03/2008	TITLE TianJin_EXT HDA_Modem HDA_Modem	SAMSUNG ELECTRONICS
CHECK RUJIN ZHENG	DEV. STEP PR		PART NO. BA41-00897A/898A
APPROVAL BC LEE	REV REV 1.0		
MODULE CODE	LAST EDIT June 03, 2008 11:43:58 AM	PAGE 1 OF 1	

http://hobi-elektronika.net

SAMSUNG PROPRIETARY
THIS DOCUMENT CONTAINS CONFIDENTIAL
PROPRIETARY INFORMATION THAT IS
SAMSUNG ELECTRONICS CO'S PROPERTY.
DO NOT DISCLOSE TO OR DUPLICATE FOR OTHERS
EXCEPT AS AUTHORIZED BY SAMSUNG.

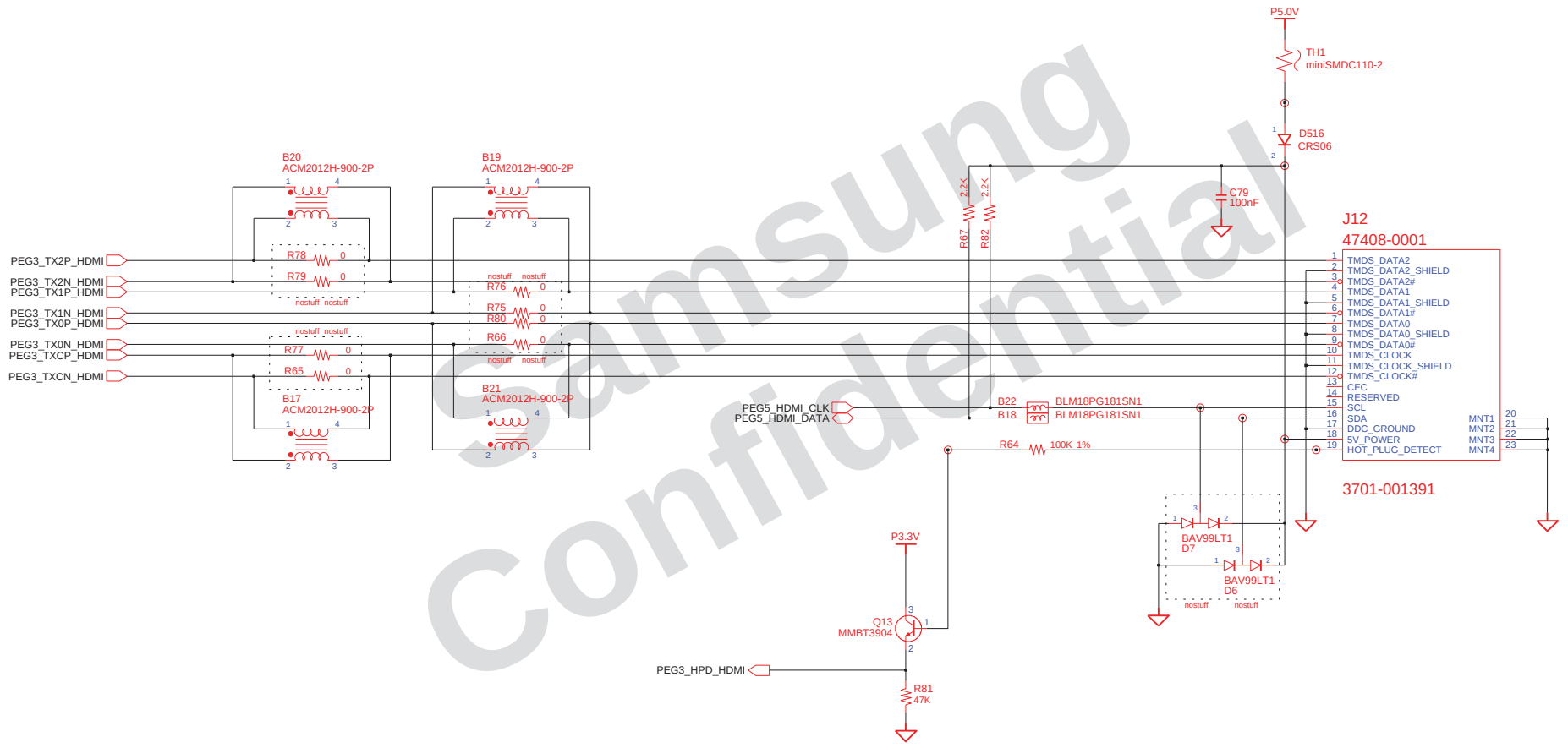

Samsung Confidential

DRAW XIAOHONG ZHANG	DATE 06/03/2008	TITLE TianJin_EXT DMB_IF_Conn DMB_IF_Conn	SAMSUNG ELECTRONICS
CHECK RUJIN ZHENG	DEV. STEP PR		
APPROVAL BC LEE	REV REV 1.0		PART NO. BA41-00897A/898A
MODULE CODE	LAST EDIT June 03, 2008 11:43:58 AM		PAGE 1 OF 1

http://hobi-elektronika.net

SAMSUNG PROPRIETARY
THIS DOCUMENT CONTAINS CONFIDENTIAL
PROPRIETARY INFORMATION THAT IS
SAMSUNG ELECTRONICS CO'S PROPERTY.
DO NOT DISCLOSE TO OR DUPLICATE FOR OTHERS
EXCEPT AS AUTHORIZED BY SAMSUNG.

80H DECODER CONNECTOR

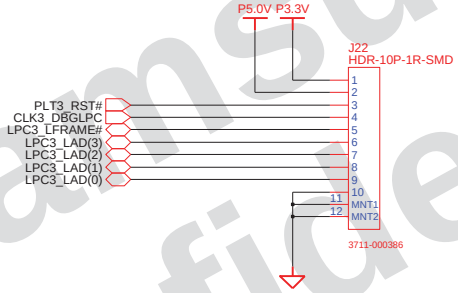

Samsung Confidential

http://hobi-elektronika.net

DRAW XIAOHONG ZHANG	DATE 06/03/2008	TITLE TianJin_EXT Other_Debug_80 Other_Debug_80	SAMSUNG ELECTRONICS
CHECK RUJIN ZHENG	DEV. STEP PR		
APPROVAL BC LEE	REV REV 1.0		PART NO. BA41-00897A/898A
MODULE CODE	LAST EDIT June 03, 2008 11:43:58 AM		PAGE 1 OF 1

SAMSUNG PROPRIETARY
THIS DOCUMENT CONTAINS CONFIDENTIAL
PROPRIETARY INFORMATION THAT IS
SAMSUNG ELECTRONICS CO'S PROPERTY.
DO NOT DISCLOSE TO OR DUPLICATE FOR OTHERS
EXCEPT AS AUTHORIZED BY SAMSUNG.

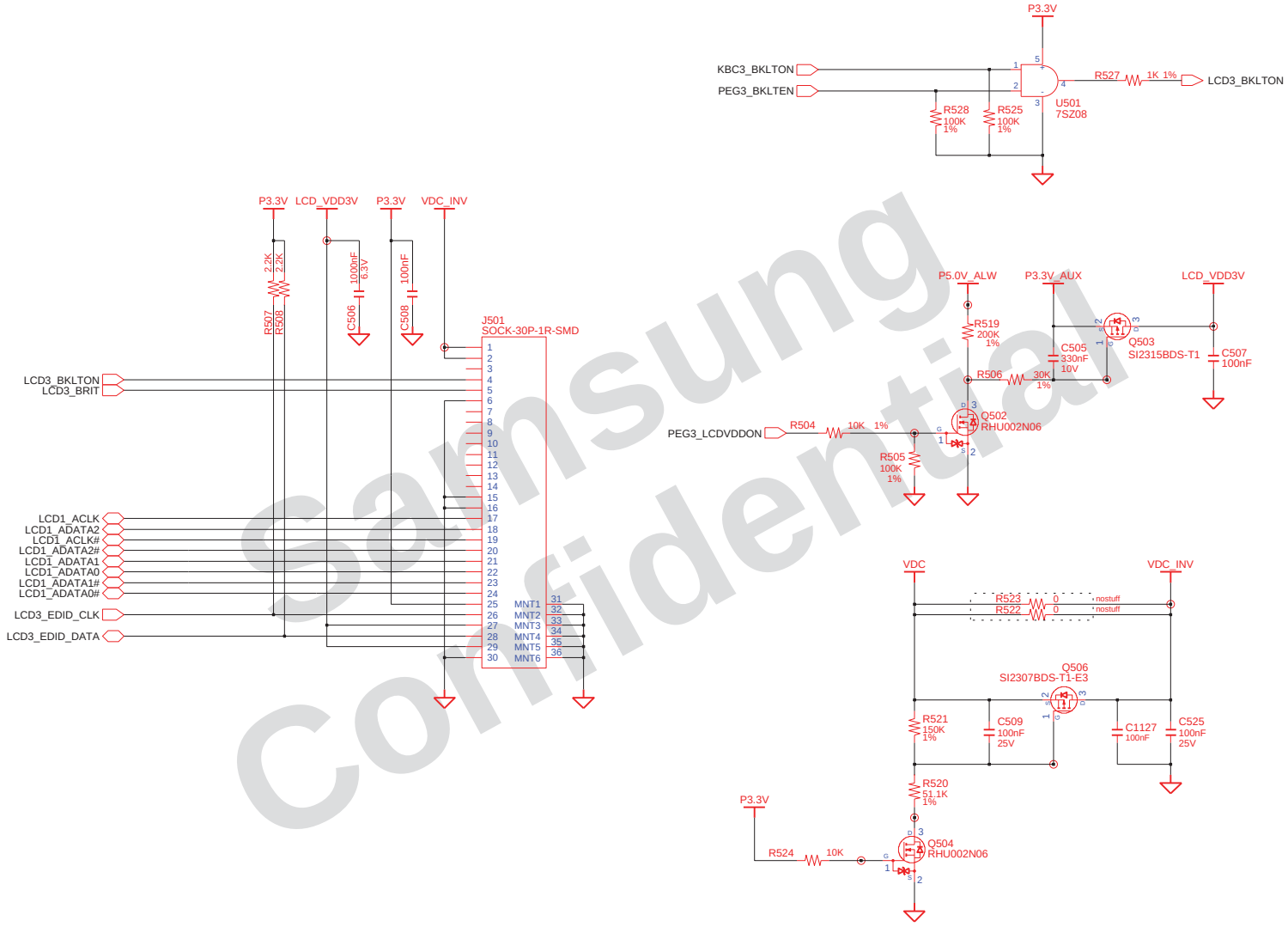

Samsung Confidential

COM-22C-015(1996.6.5) REV. 3

http://hobi-elektronika.net

DRAW XIAOHONG ZHANG	DATE 06/03/2008	TITLE TianJin_EXT LCD_IF_14p1 LCD_IF_14p1	SAMSUNG ELECTRONICS
CHECK RUJIN ZHENG	DEV. STEP PR		
APPROVAL BC LEE	REV REV 1.0		PART NO. BA41-00897A/898A
MODULE CODE undefined	LAST EDIT June 03, 2008 11:43:58 AM		PAGE 1 OF 1

SAMSUNG PROPRIETARY
THIS DOCUMENT CONTAINS CONFIDENTIAL
PROPRIETARY INFORMATION THAT IS
SAMSUNG ELECTRONICS CO'S PROPERTY.
DO NOT DISCLOSE TO OR DUPLICATE FOR OTHERS
EXCEPT AS AUTHORIZED BY SAMSUNG.

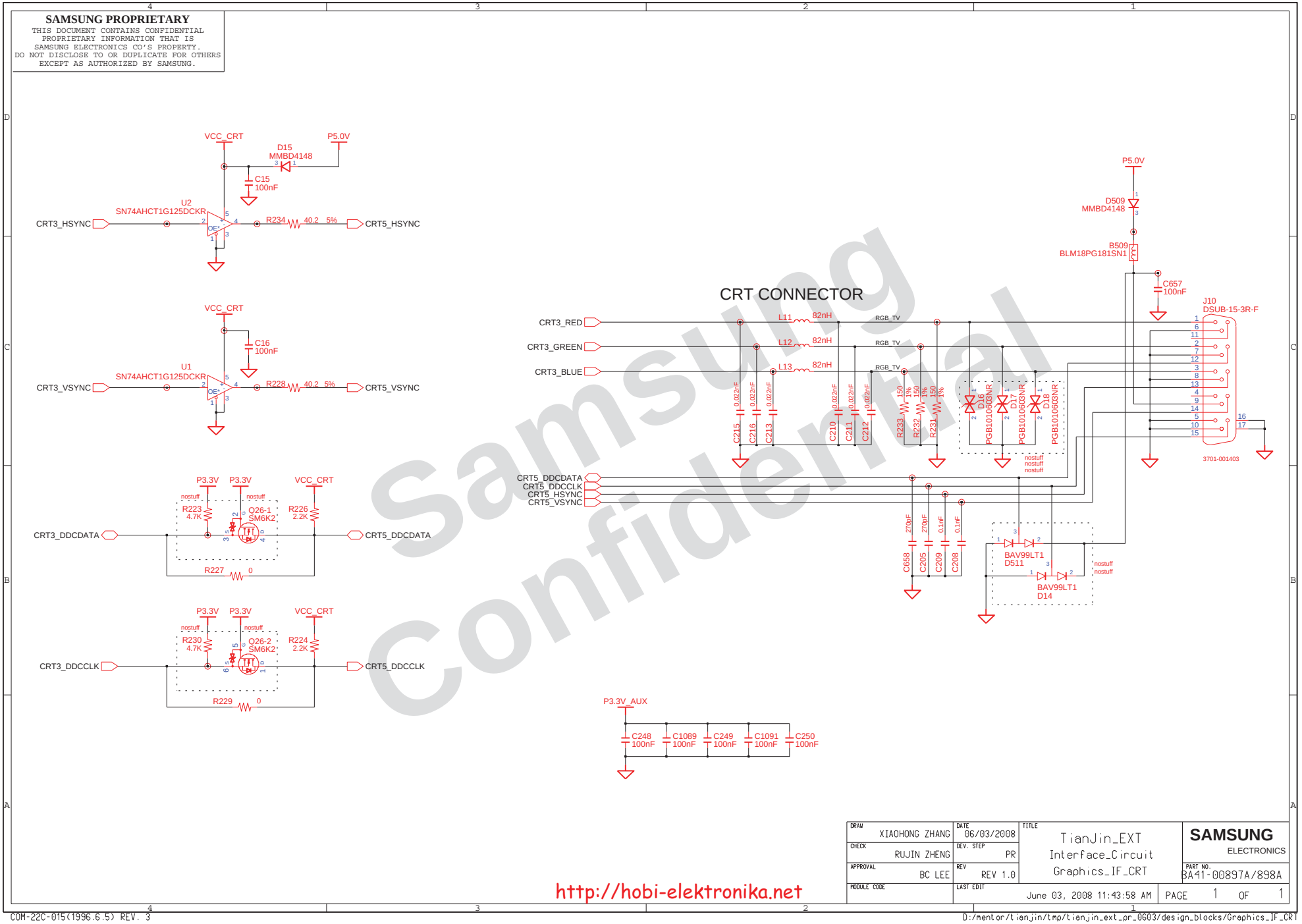

DRAW XIAOHONG ZHANG	DATE 06/03/2008	TITLE TianJin_EXT Interface_Circuit Graphics_IF_CRT	SAMSUNG ELECTRONICS
CHECK RUJIN ZHENG	DEV. STEP PR		
APPROVAL BC LEE	REV REV 1.0		PART NO. BA41-00897A/898A
MODULE CODE	LAST EDIT June 03, 2008 11:43:58 AM		PAGE 1 OF 1

Samsung Confidential

http://hobi-elektronika.net

SAMSUNG PROPRIETARY
THIS DOCUMENT CONTAINS CONFIDENTIAL
PROPRIETARY INFORMATION THAT IS
SAMSUNG ELECTRONICS CO'S PROPERTY.
DO NOT DISCLOSE TO OR DUPLICATE FOR OTHERS
EXCEPT AS AUTHORIZED BY SAMSUNG.

KEYBOARD

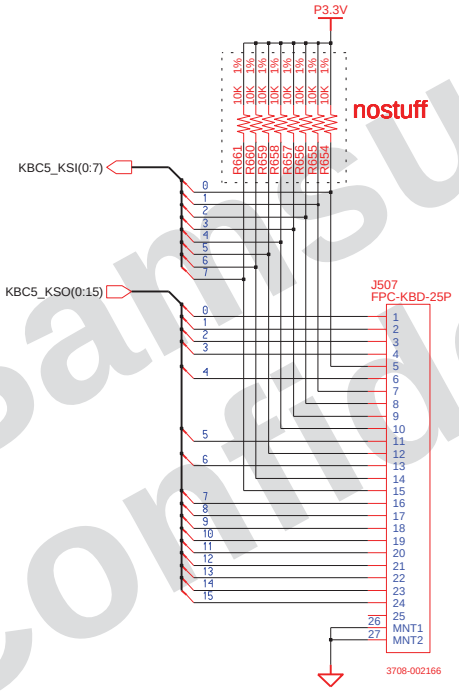

Samsung Confidential

DRAW XIAOHONG ZHANG	DATE 06/03/2008	TITLE TianJin_EXT KBD_IF_Conn KBD_IF_Conn	SAMSUNG ELECTRONICS
CHECK RUJIN ZHENG	DEV. STEP PR		
APPROVAL BC LEE	REV REV 1.0		PART NO. BA41-00897A/898A
MODULE CODE	LAST EDIT June 03, 2008 11:43:58 AM		PAGE 1 OF 1

http://hobi-elektronika.net

SAMSUNG PROPRIETARY
THIS DOCUMENT CONTAINS CONFIDENTIAL
PROPRIETARY INFORMATION THAT IS
SAMSUNG ELECTRONICS CO'S PROPERTY.
DO NOT DISCLOSE TO OR DUPLICATE FOR OTHERS
EXCEPT AS AUTHORIZED BY SAMSUNG.

Bluetooth Interface

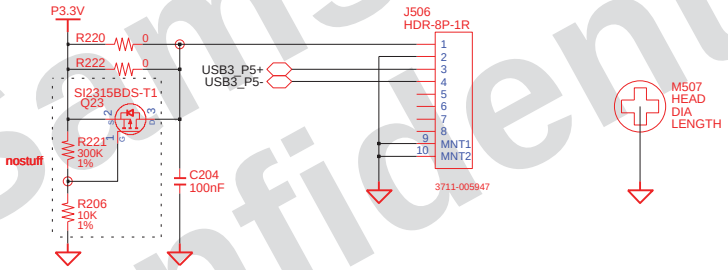

Samsung Confidential

DRAW XIAOHONG ZHANG	DATE 06/03/2008	TITLE TianJin_EXT Bluetooth_IF_Conn Bluetooth_IF_Conn	SAMSUNG ELECTRONICS
CHECK RUJIN ZHENG	DEV. STEP PR		
APPROVAL BC LEE	REV REV 1.0		PART NO. BA41-00897A/898A
MODULE CODE	LAST EDIT June 03, 2008 11:43:58 AM		PAGE 1 OF 1

http://hobi-elektronika.net

SAMSUNG PROPRIETARY
THIS DOCUMENT CONTAINS CONFIDENTIAL
PROPRIETARY INFORMATION THAT IS
SAMSUNG ELECTRONICS CO'S PROPERTY.
DO NOT DISCLOSE TO OR DUPLICATE FOR OTHERS
EXCEPT AS AUTHORIZED BY SAMSUNG.

TOUCHPAD

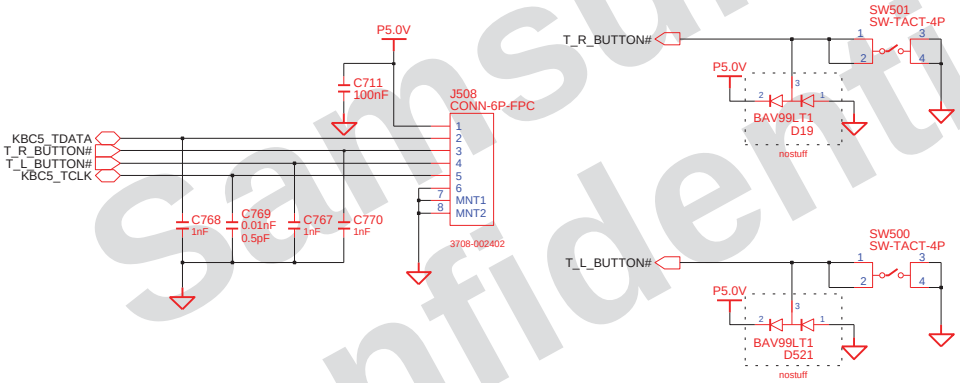

Samsung Confidential

http://hobi-elektronika.net

DRAW XIAOHONG ZHANG	DATE 06/03/2008	TITLE TianJin_EXT	SAMSUNG ELECTRONICS
CHECK RUJIN ZHENG	DEV. STEP PR	Touchpad_IF_Conn	
APPROVAL BC LEE	REV REV 1.0	Touchpad_IF_Conn	PART NO. BA41-00897A/898A
MODULE CODE	LAST EDIT June 03, 2008 11:43:58 AM		PAGE 1 OF 1

SAMSUNG PROPRIETARY
THIS DOCUMENT CONTAINS CONFIDENTIAL
PROPRIETARY INFORMATION THAT IS
SAMSUNG ELECTRONICS CO'S PROPERTY.
DO NOT DISCLOSE TO OR DUPLICATE FOR OTHERS
EXCEPT AS AUTHORIZED BY SAMSUNG.

CAMERA

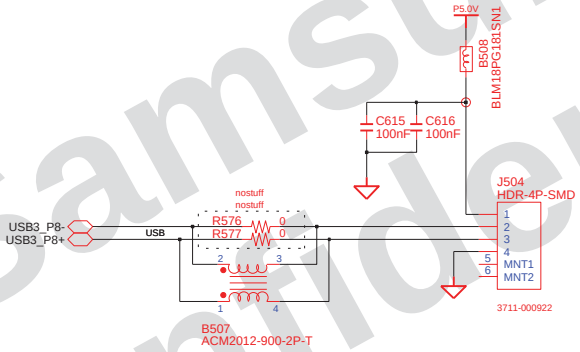

Samsung Confidential

DRAW XIAOHONG ZHANG	DATE 06/03/2008	TITLE TianJin_EXT Camera_IF_Conn Camera_IF_Conn	SAMSUNG ELECTRONICS
CHECK RUJIN ZHENG	DEV. STEP PR		
APPROVAL BC LEE	REV REV 1.0		PART NO. BA41-00897A/898A
MODULE CODE	LAST EDIT June 03, 2008 11:43:58 AM		PAGE 1 OF 1

http://hobi-elektronika.net

SAMSUNG PROPRIETARY
THIS DOCUMENT CONTAINS CONFIDENTIAL
PROPRIETARY INFORMATION THAT IS
SAMSUNG ELECTRONICS CO'S PROPERTY.
DO NOT DISCLOSE TO OR DUPLICATE FOR OTHERS
EXCEPT AS AUTHORIZED BY SAMSUNG.

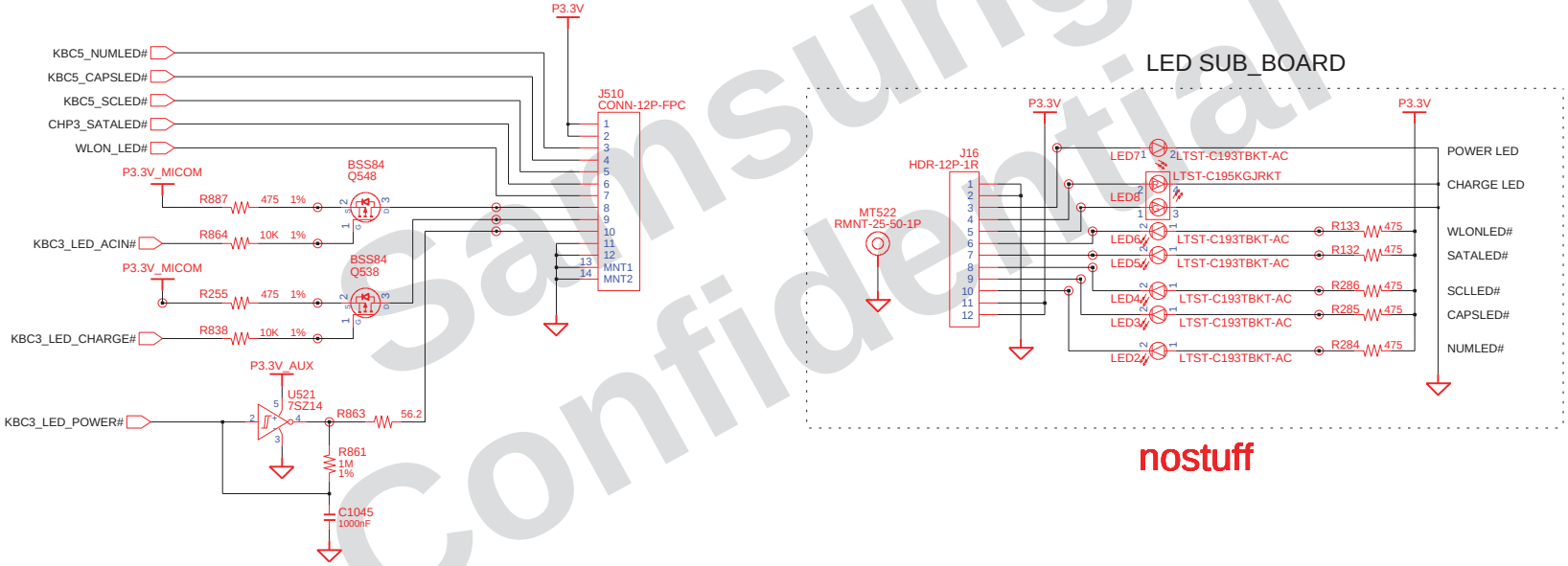

nostuff

Samsung Confidential

http://hobi-elektronika.net

DRAW XIAOHONG ZHANG	DATE 06/03/2008	TITLE TianJin_EXT LED_Switch LED_Switch	SAMSUNG ELECTRONICS
CHECK RUJIN ZHENG	DEV. STEP PR		
APPROVAL BC LEE	REV REV 1.0		PART NO. BA41-00897A/898A
MODULE CODE	LAST EDIT June 03, 2008 11:43:58 AM		PAGE 1 OF 1

SAMSUNG PROPRIETARY
THIS DOCUMENT CONTAINS CONFIDENTIAL
PROPRIETARY INFORMATION THAT IS
SAMSUNG ELECTRONICS CO'S PROPERTY.
DO NOT DISCLOSE TO OR DUPLICATE FOR OTHERS
EXCEPT AS AUTHORIZED BY SAMSUNG.

LID_SWITCH

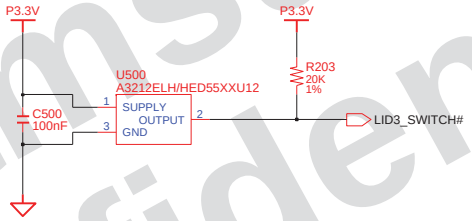

Samsung Confidential

http://hobi-elektronika.net

DRAW XIAOHONG ZHANG	DATE 06/03/2008	TITLE TianJin_EXT LID_Switch LID_Switch	SAMSUNG ELECTRONICS
CHECK RUJIN ZHENG	DEV. STEP PR		
APPROVAL BC LEE	REV REV 1.0		PART NO. BA41-00897A/898A
MODULE CODE	LAST EDIT June 03, 2008 11:43:58 AM		PAGE 1 OF 1

SAMSUNG PROPRIETARY
THIS DOCUMENT CONTAINS CONFIDENTIAL
PROPRIETARY INFORMATION THAT IS
SAMSUNG ELECTRONICS CO'S PROPERTY.
DO NOT DISCLOSE TO OR DUPLICATE FOR OTHERS
EXCEPT AS AUTHORIZED BY SAMSUNG.

Graphic Core Power

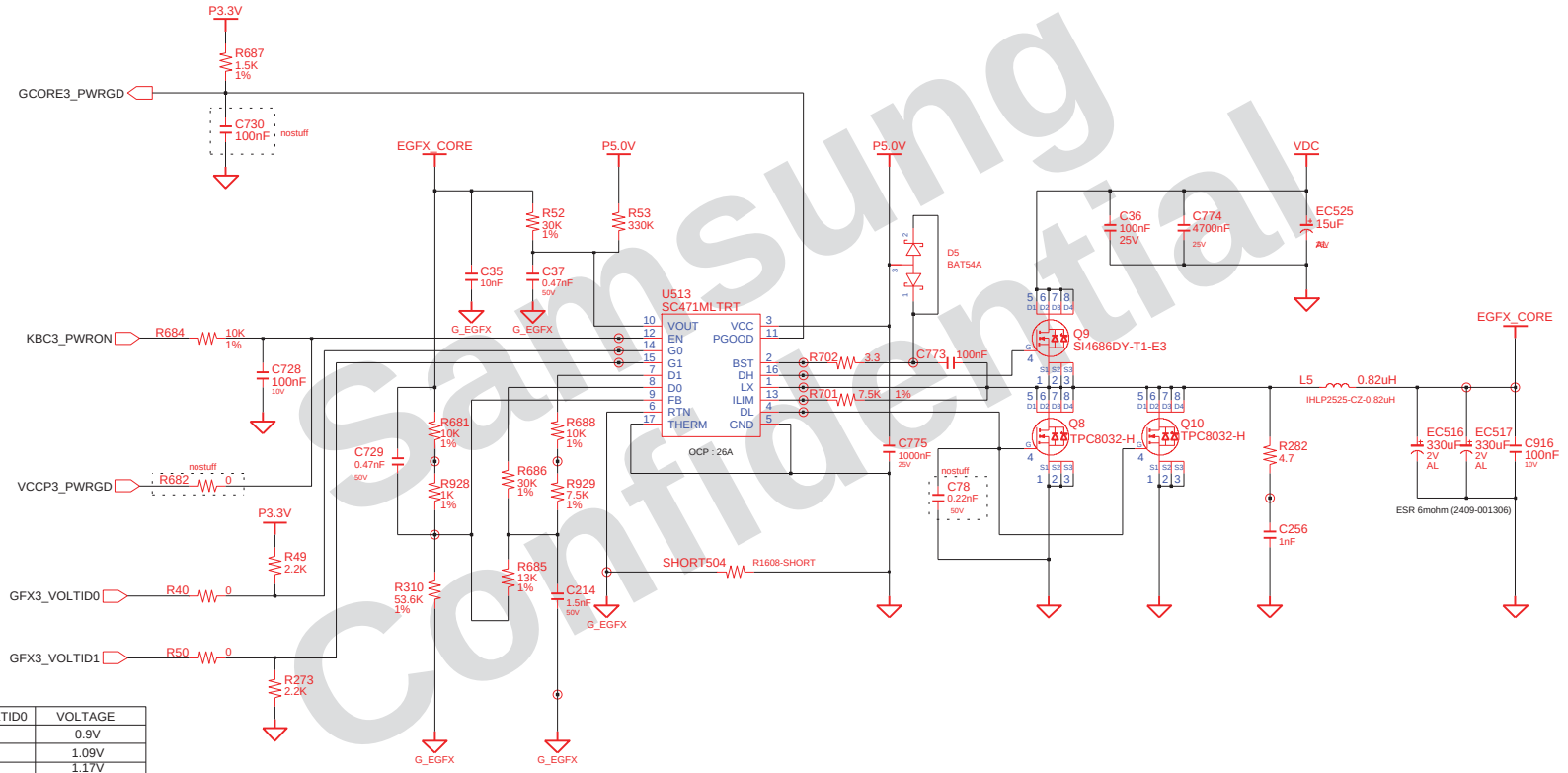

GFX3_VOLTID1	GFX3_VOLTID0	VOLTAGE
	0	0.9V
	1	1.09V
	0	1.17V
	1	RESERVED

Samsung Confidential

http://hobi-elektronika.net

DRAW XIAOHONG ZHANG	DATE 06/03/2008	TITLE TianJin_EXT PWR_Gfx_MV_Ext Ext Gfx Memory(SC486)	SAMSUNG ELECTRONICS
CHECK RUJIN ZHENG	DEV. STEP PR		
APPROVAL BC LEE	REV REV 1.0		PART NO. BA41-00897A/898A
MODULE CODE	LAST EDIT June 03, 2008 11:43:58 AM		PAGE 1 OF 2

SAMSUNG PROPRIETARY
THIS DOCUMENT CONTAINS CONFIDENTIAL
PROPRIETARY INFORMATION THAT IS
SAMSUNG ELECTRONICS CO'S PROPERTY.
DO NOT DISCLOSE TO OR DUPLICATE FOR OTHERS
EXCEPT AS AUTHORIZED BY SAMSUNG.

P3.3V_AUX & P5.0V_AUX

TONSEL VREF2
5V / 3.3V : 280KHz / 430KHz
(4.5A)

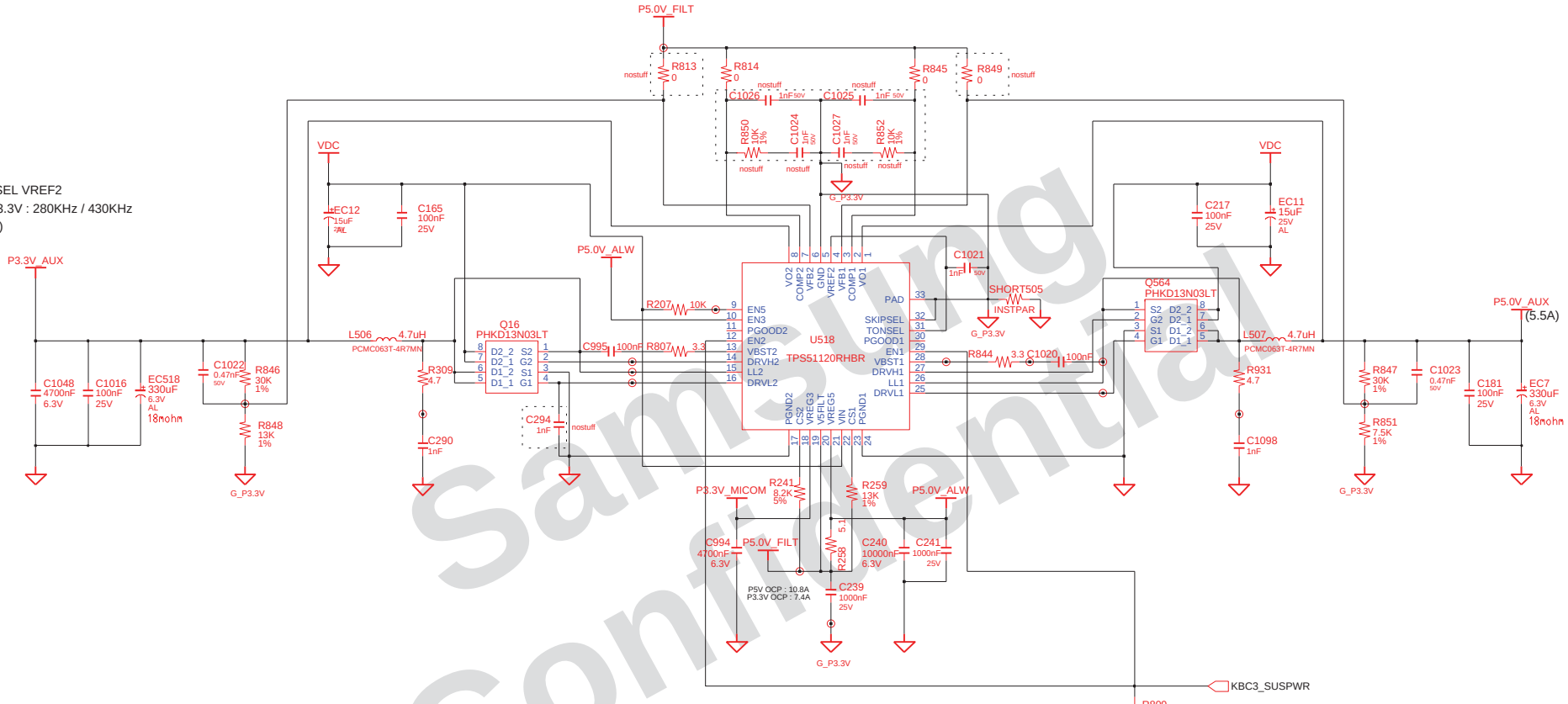

P12.0V_ALW

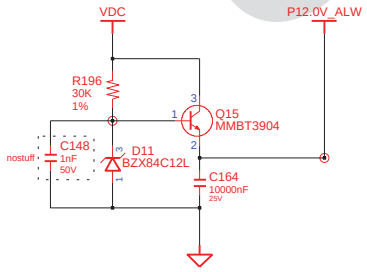

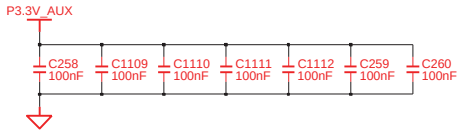

Samsung Confidential

http://hobi-elektronika.net

DRAW XIAOHONG ZHANG	DATE 06/03/2008	TITLE TianJin_EXT PWR_MV_3V_5V P3.3V_AUX / P5.0V_AUX	SAMSUNG ELECTRONICS
CHECK RUJIN ZHENG	DEV. STEP PR		
APPROVAL BC LEE	REV REV 1.0		PART NO. BA41-00897A/898A
MODULE CODE undefined	LAST EDIT June 03, 2008 11:43:58 AM		PAGE 1 OF 1

SAMSUNG PROPRIETARY
THIS DOCUMENT CONTAINS CONFIDENTIAL
PROPRIETARY INFORMATION THAT IS
SAMSUNG ELECTRONICS CO'S PROPERTY.
DO NOT DISCLOSE TO OR DUPLICATE FOR OTHERS
EXCEPT AS AUTHORIZED BY SAMSUNG.

CHIPSET POWER(P1.05V & P1.1V)

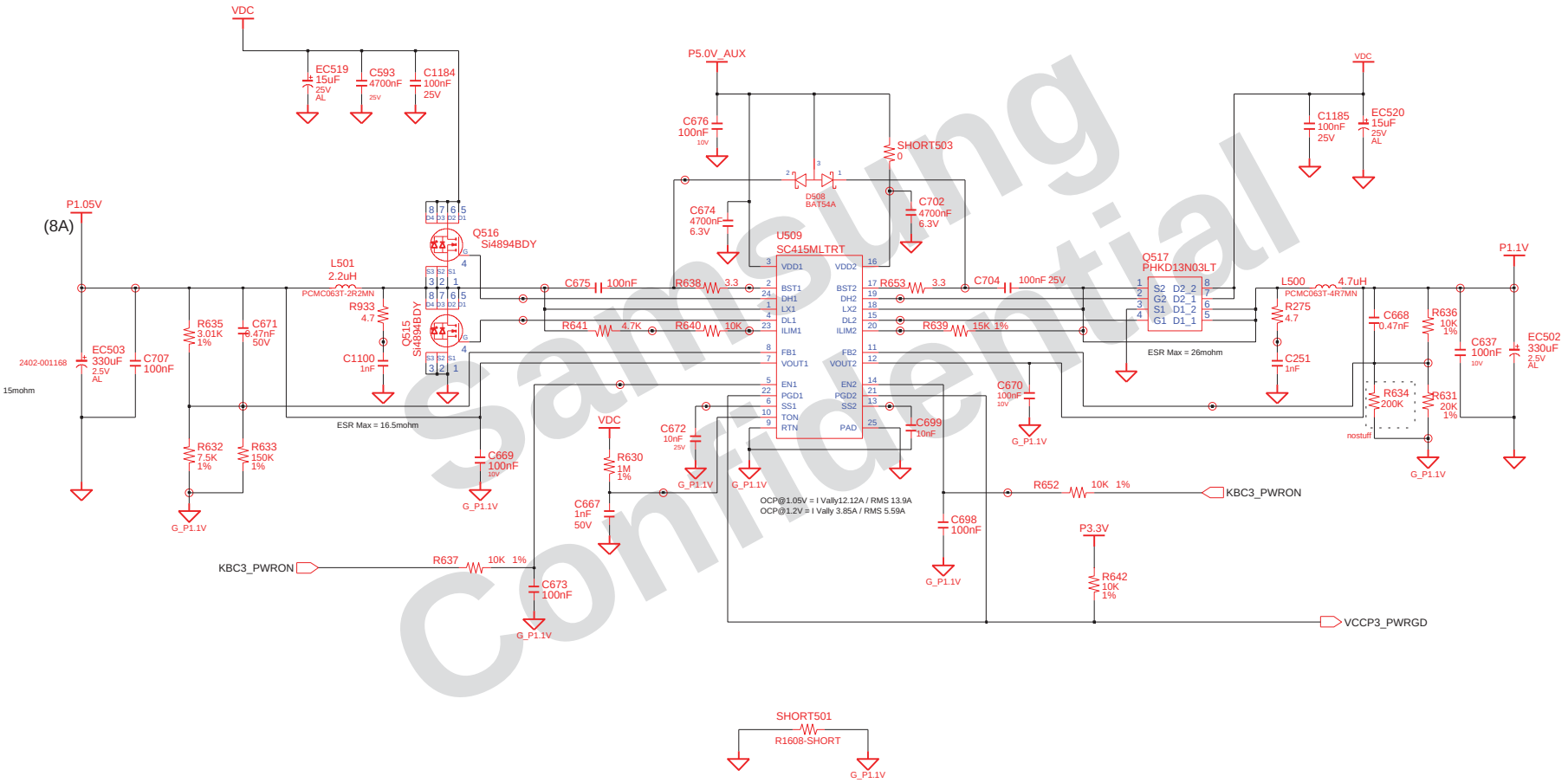

Samsung Confidential

http://hobi-elektronika.net

DRAW XIAOHONG ZHANG	DATE 06/03/2008	TITLE TianJin_EXT PWR_MV_Cantiga Chipset Power (P1.05V_M,P1.2V)	SAMSUNG ELECTRONICS
CHECK RUJIN ZHENG	DEV. STEP PR		
APPROVAL BC LEE	REV REV 1.0		PART NO. BA41-00897A/898A
MODULE CODE undefined	LAST EDIT June 03, 2008 11:43:58 AM		PAGE 1 OF 1

SAMSUNG PROPRIETARY
THIS DOCUMENT CONTAINS CONFIDENTIAL PROPRIETARY INFORMATION THAT IS SAMSUNG ELECTRONICS CO'S PROPERTY. DO NOT DISCLOSE TO OR DUPLICATE FOR OTHERS EXCEPT AS AUTHORIZED BY SAMSUNG.

CHARGER & POWER MANAGEMENT

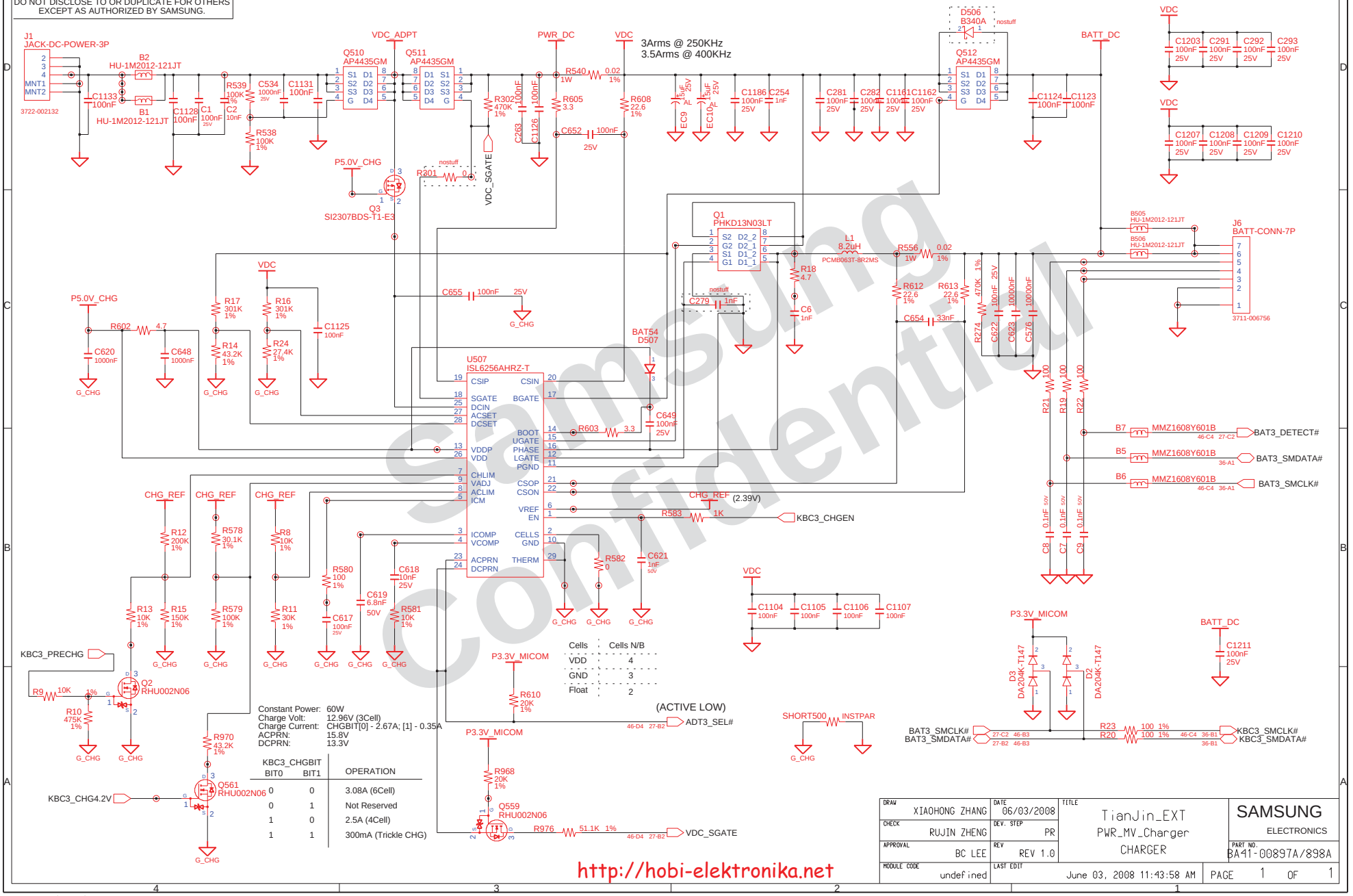

KBC3_CHGBIT BIT0	BIT1	OPERATION
0	0	3.08A (6Cell)
0	1	Not Reserved
1	0	2.5A (4Cell)
1	1	300mA (Trickle CHG)

Samsung Confidential

http://hobi-elektronika.net

DRAW XIAOHONG ZHANG	DATE 06/03/2008	TITLE TianJin_EXT PWR_MV_Charger CHARGER	SAMSUNG ELECTRONICS
CHECK RUJIN ZHENG	DEV. STEP PR		
APPROVAL BC LEE	REV REV 1.0		PART NO. BA41-00897A/898A
MODULE CODE undefined	LAST EDIT June 03, 2008 11:43:58 AM		PAGE 1 OF 1

SAMSUNG PROPRIETARY
THIS DOCUMENT CONTAINS CONFIDENTIAL
PROPRIETARY INFORMATION THAT IS
SAMSUNG ELECTRONICS CO'S PROPERTY.
DO NOT DISCLOSE TO OR DUPLICATE FOR OTHERS
EXCEPT AS AUTHORIZED BY SAMSUNG.

CPU VRM [INTERSIL]

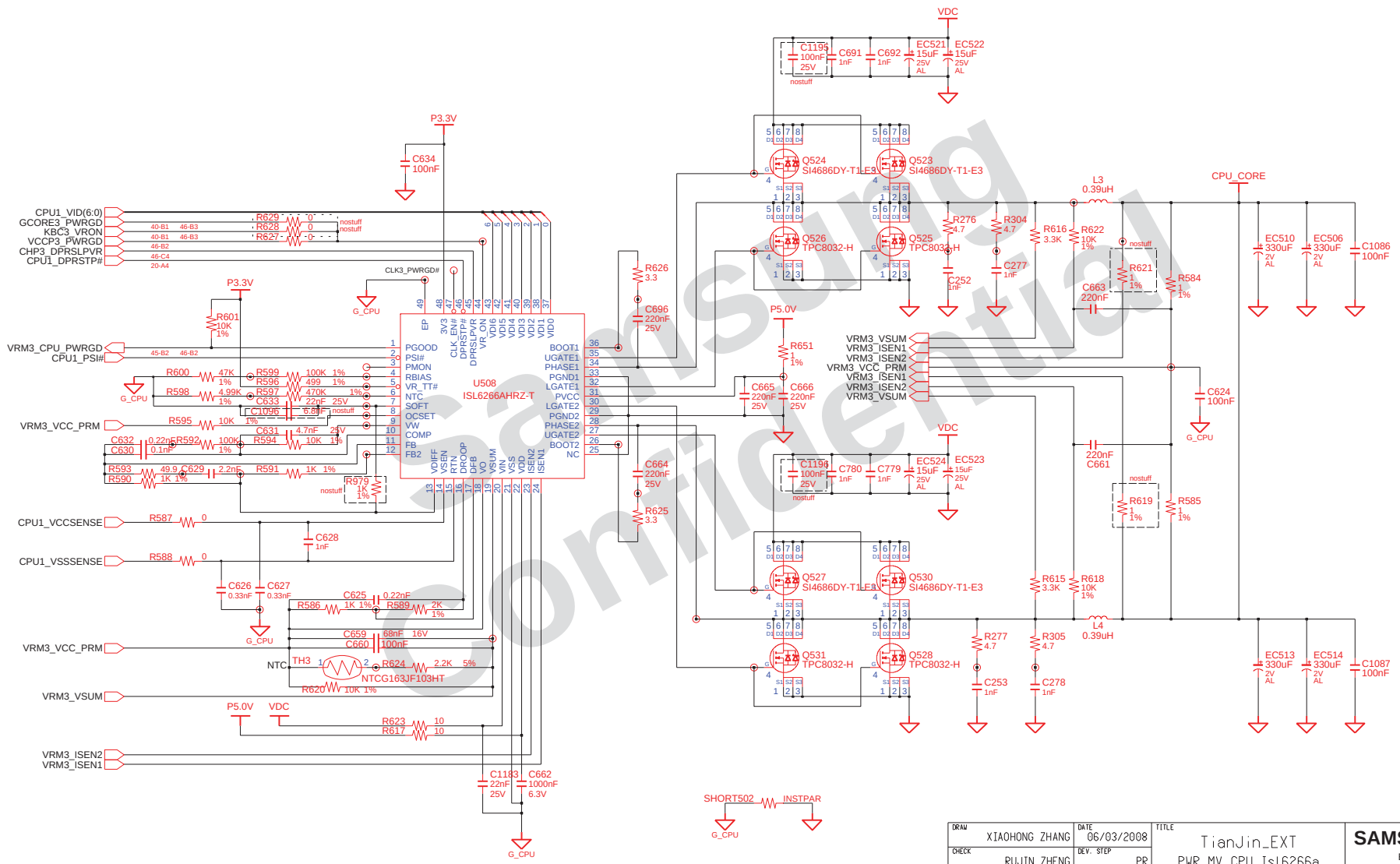

DRAW XIAOHONG ZHANG	DATE 06/03/2008	TITLE TianJin_EXT PWR_MV_CPU_Isl6266a CPU VRM (IMVP6+) Intersil	SAMSUNG ELECTRONICS
CHECK RUJIN ZHENG	DEV. STEP PR		
APPROVAL BC LEE	REV REV 1.0		PART NO. BA41-00897A/898A
MODULE CODE undefined	LAST EDIT June 03, 2008 11:43:58 AM		PAGE 1 OF 1

http://hobi-elektronika.net

Samsung Confidential

SAMSUNG PROPRIETARY
THIS DOCUMENT CONTAINS CONFIDENTIAL
PROPRIETARY INFORMATION THAT IS
SAMSUNG ELECTRONICS CO'S PROPERTY.
DO NOT DISCLOSE TO OR DUPLICATE FOR OTHERS
EXCEPT AS AUTHORIZED BY SAMSUNG.

POWER DISCHARGER

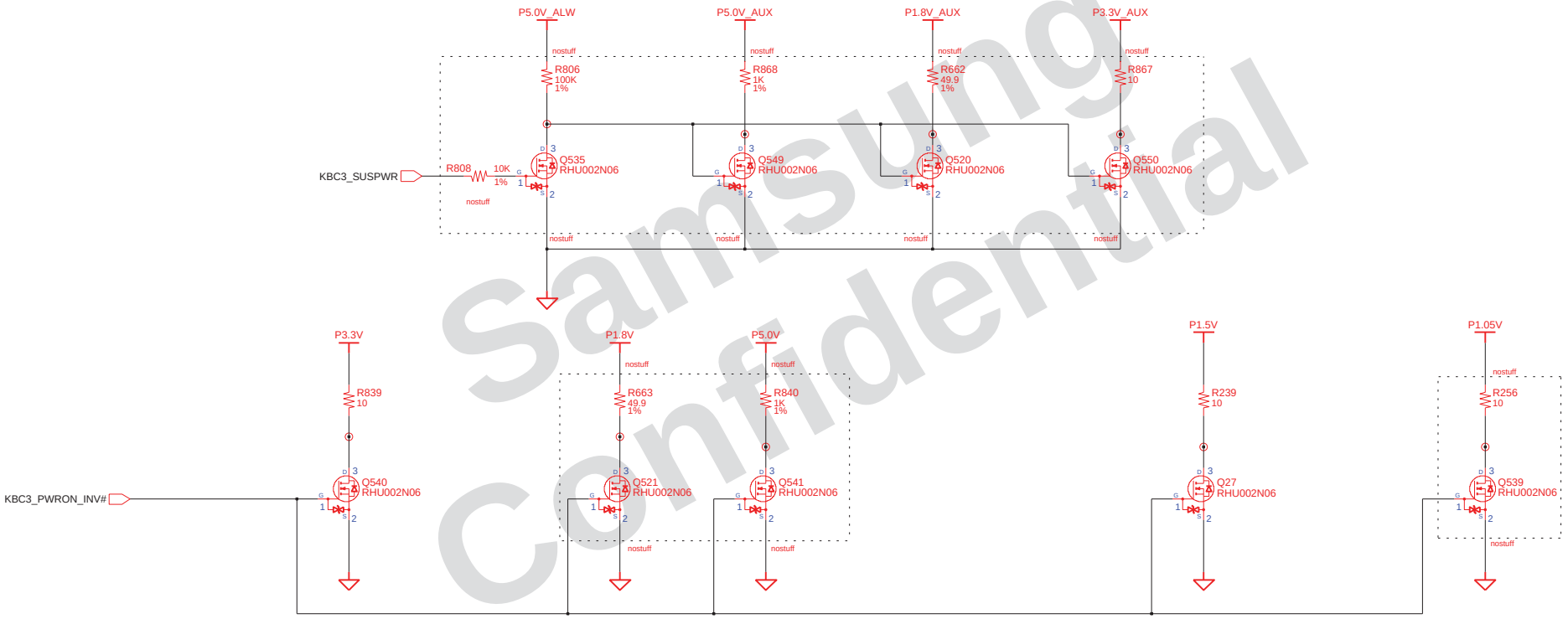

Samsung Confidential

DRAW: XIAOHONG ZHANG	DATE: 06/03/2008	TITLE: TianJin_EXT PWR_MV_DisCharger DISCHARGING LOGIC	SAMSUNG ELECTRONICS
CHECK: RUJIN ZHENG	DEV. STEP: PR		
APPROVAL: BC LEE	REV: REV 1.0		PART NO. BA41-00897A/898A
MODULE CODE: undefined	LAST EDIT: June 03, 2008 11:43:58 AM		PAGE 1 OF 1

http://hobi-elektronika.net

SAMSUNG PROPRIETARY
THIS DOCUMENT CONTAINS CONFIDENTIAL
PROPRIETARY INFORMATION THAT IS
SAMSUNG ELECTRONICS CO'S PROPERTY.
DO NOT DISCLOSE TO OR DUPLICATE FOR OTHERS
EXCEPT AS AUTHORIZED BY SAMSUNG.

DDR2 POWER

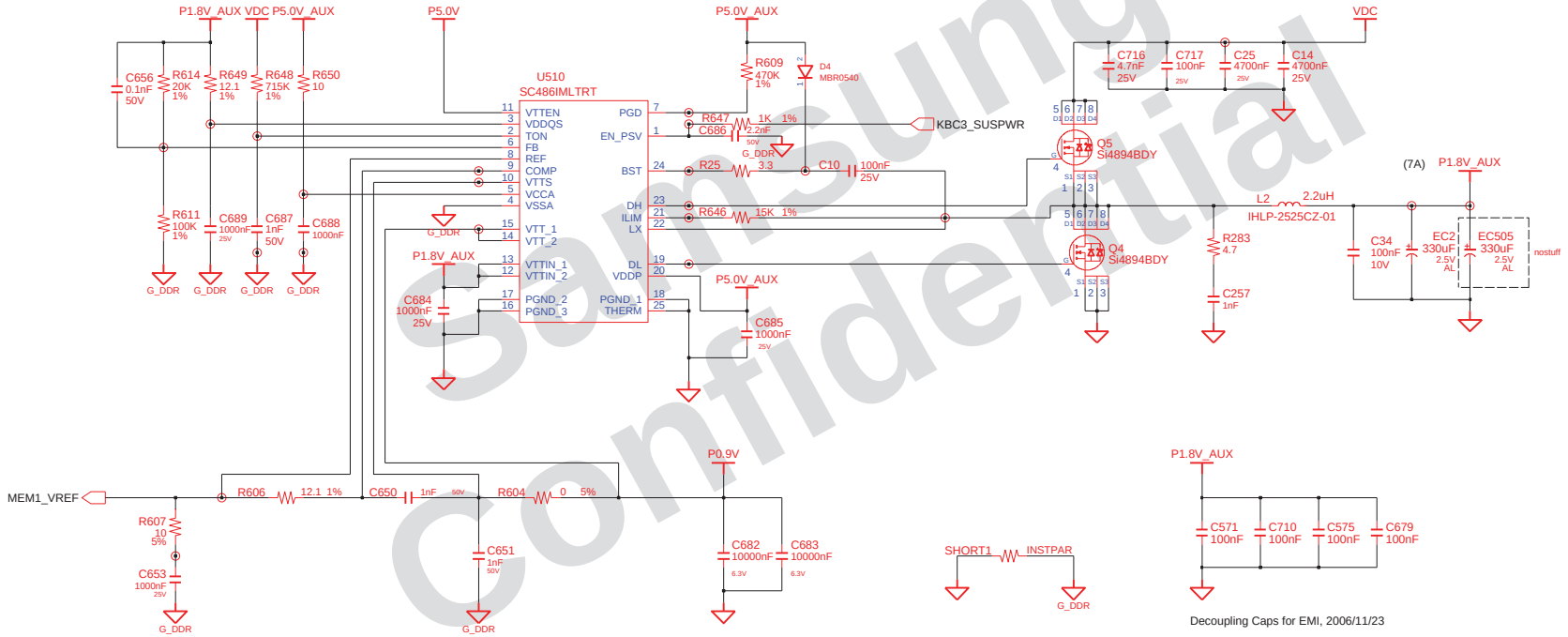

Samsung Confidential

http://hobi-elektronika.net

DRAW XIAOHONG ZHANG	DATE 06/03/2008	TITLE TianJin_EXT PWR_MV_MeMory DDR3 POWER (P1.5V_AUX)	SAMSUNG ELECTRONICS
CHECK RUJIN ZHENG	DEV. STEP PR		
APPROVAL BC LEE	REV REV 1.0		PART NO. BA41-00897A/898A
MODULE CODE undefined	LAST EDIT June 03, 2008 11:43:58 AM		PAGE 1 OF 1

SAMSUNG PROPRIETARY
THIS DOCUMENT CONTAINS CONFIDENTIAL
PROPRIETARY INFORMATION THAT IS
SAMSUNG ELECTRONICS CO'S PROPERTY.
DO NOT DISCLOSE TO OR DUPLICATE FOR OTHERS
EXCEPT AS AUTHORIZED BY SAMSUNG.

P1.5V

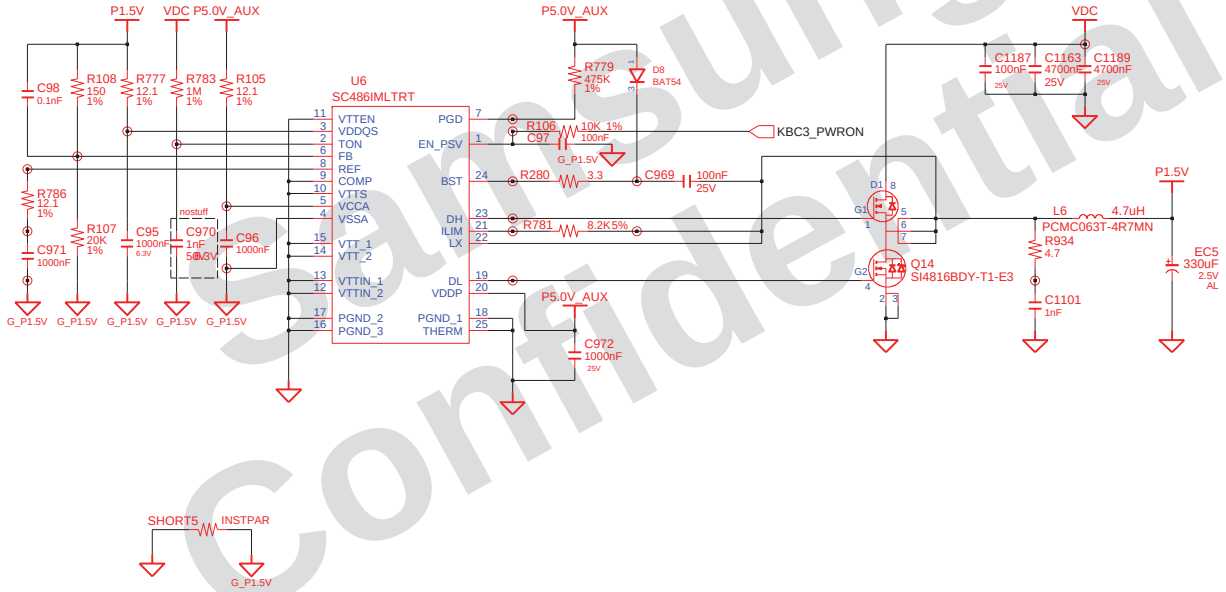

Samsung Confidential

DRAW XIAOHONG ZHANG	DATE 06/03/2008	TITLE TianJin_EXT PWR_MV_Switched SWITCHED POWER	SAMSUNG ELECTRONICS
CHECK RUJIN ZHENG	DEV. STEP PR		
APPROVAL BC LEE	REV REV 1.0		PART NO. BA41-00897A/898A
MODULE CODE	LAST EDIT June 03, 2008 11:43:58 AM		PAGE 1 OF 2

http://hobi-elektronika.net

SAMSUNG PROPRIETARY
THIS DOCUMENT CONTAINS CONFIDENTIAL
PROPRIETARY INFORMATION THAT IS
SAMSUNG ELECTRONICS CO'S PROPERTY.
DO NOT DISCLOSE TO OR DUPLICATE FOR OTHERS
EXCEPT AS AUTHORIZED BY SAMSUNG.

Switched Power On (P3.3V)

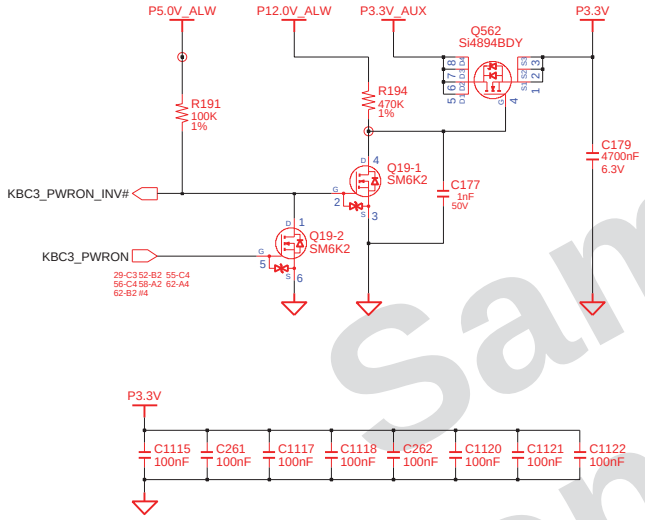

Switched Power On (P1.8V)

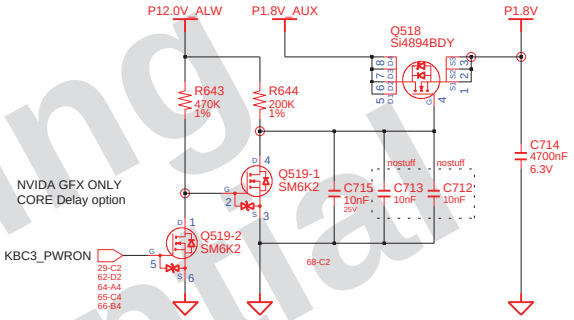

Switched Power On (P5.0V)

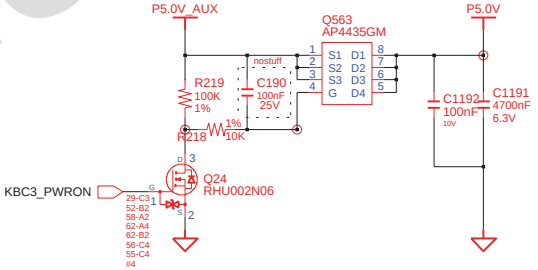

Samsung Confidential

http://hobi-elektronika.net

DRAW XIAOHONG ZHANG	DATE 06/03/2008	TITLE TianJin_EXT PWR_MV_Switched SWITCHED POWER	SAMSUNG ELECTRONICS
CHECK RUJIN ZHENG	DEV. STEP PR		
APPROVAL BC LEE	REV REV 1.0		PART NO. BA41-00897A/898A
MODULE CODE undefined	LAST EDIT June 03, 2008 11:43:58 AM		PAGE 2 OF 2

Index_Page

Sheet1 ---------- Root[sheet1]
Sheet2 ---------- Root[sheet2]
Sheet3 ---------- Root[sheet3]
Sheet4 ---------- Root[sheet4]
Sheet5 ---------- Root[sheet5]
Sheet6 ---------- Root[sheet6]
Sheet7 ---------- Root[sheet7]
Sheet8 ---------- Root[sheet8]
Sheet9 ---------- Root[sheet9]
Sheet10 ---------- Root[sheet10]
Sheet11 ---------- Root[sheet11]
Sheet12 ---------- Root[sheet12]
Sheet13 ---------- Root[sheet13]
Sheet14 ---------- Root[sheet14]
Sheet15 ---------- Root[sheet15]
Sheet16 ---------- Root[sheet16]
Sheet17 ---------- Root[sheet17]
Sheet18 ---------- CK_Clock_505M[sheet1]
Sheet19 ---------- Thermal_Sensor_SMSC_Emc2102[sheet1]
Sheet20 ---------- CPU_Penryn_MV_SV[sheet1]
Sheet21 ---------- CPU_Penryn_MV_SV[sheet2]
Sheet22 ---------- CPU_Penryn_MV_SV[sheet3]
Sheet23 ---------- MCH_CANTIGA_PM_DDR3[sheet1]
Sheet24 ---------- MCH_CANTIGA_PM_DDR3[sheet2]
Sheet25 ---------- MCH_CANTIGA_PM_DDR3[sheet3]
Sheet26 ---------- MCH_CANTIGA_PM_DDR3[sheet4]
Sheet27 ---------- MCH_CANTIGA_PM_DDR3[sheet5]
Sheet28 ---------- SODIMM_DDR2[sheet1]
Sheet29 ---------- SODIMM_DDR2[sheet2]
Sheet30 ---------- ICH_9M_B[sheet1]
Sheet31 ---------- ICH_9M_B[sheet2]
Sheet32 ---------- ICH_9M_B[sheet3]
Sheet33 ---------- ICH_9M_B[sheet4]
Sheet34 ---------- ICH_9M_B[sheet5]
Sheet35 ---------- SPI_BIOS_ROM[sheet1]
Sheet36 ---------- Gfx_External_Nvidia_Nb9x[sheet1]
Sheet37 ---------- Gfx_External_Nvidia_Nb9x[sheet2]
Sheet38 ---------- Gfx_External_Nvidia_Nb9x[sheet3]
Sheet39 ---------- Gfx_External_Nvidia_Nb9x[sheet4]
Sheet40 ---------- Graphics_Memory_Nvidia[sheet1]
Sheet41 ---------- HDA_Codec_Alc262[sheet1]
Sheet42 ---------- HDA_Codec_Alc262[sheet2]
Sheet43 ---------- HDA_Codec_Alc262[sheet3]
Sheet44 ---------- HDA_Codec_Alc262[sheet4]
Sheet45 ---------- LAN_Marvell_8055[sheet1]
Sheet46 ---------- LAN_Marvell_8055[sheet2]
Sheet47 ---------- MICOM_Renesas2110_100p[sheet1]
Sheet48 ---------- HDD_IF_Conn[sheet1]
Sheet49 ---------- ODD_IF_Conn[sheet1]
Sheet50 ---------- USB_2Port[sheet1]
Sheet51 ---------- HDA_Modem[sheet1]
Sheet52 ---------- HDMI_Sil1390[sheet1]
Sheet53 ---------- Other_Debug_80[sheet1]
Sheet54 ---------- LCD_IF_14p1[sheet1]
Sheet55 ---------- Graphics_IF_CRT[sheet1]
Sheet56 ---------- KBD_IF_Conn[sheet1]
Sheet57 ---------- Bluetooth_IF_Conn[sheet1]
Sheet58 ---------- Touchpad_IF_Conn[sheet1]
Sheet59 ---------- Camera_IF_Conn[sheet1]
Sheet60 ---------- LED_Switch[sheet1]
Sheet61 ---------- LID_Switch[sheet1]
Sheet62 ---------- PWR_Gfx_MV_Ext[sheet1]
Sheet63 ---------- PWR_MV_3V_5V[sheet1]
Sheet64 ---------- PWR_MV_Cantiga[sheet1]
Sheet65 ---------- PWR_MV_Charger[sheet1]
Sheet66 ---------- PWR_MV_CPU_Isl6266a[sheet1]
Sheet67 ---------- PWR_MV_DisCharger[sheet1]
Sheet68 ---------- PWR_MV_MeMory[sheet1]
Sheet69 ---------- PWR_MV_Switched[sheet1]
Sheet70 ---------- PWR_MV_Switched[sheet2]

Samsung
Confidential

http://hobi-elektronika.net