SAMSUNG PROPRIETARY
THIS DOCUMENT CONTAINS CONFIDENTIAL PROPRIETARY INFORMATION THAT IS SAMSUNG ELECTRONICS CO'S PROPERTY. DO NOT DISCLOSE TO OR DUPLICATE FOR OTHERS EXCEPT AS AUTHORIZED BY SAMSUNG.

SYDNEY

CPU : Intel Merom-4M (800/667 MHz)
Chip Set : Intel 965PM & ICH8-M
Remarks : Mobility Platform

Model Name : SYDNEY
PBA Name : MAIN
PCB Code : BA41-0071#A
Dev. Step : PR
Revision : 1.0
T.R. Date :

BA41-00717A:GCE
BA41-00718A:TPT
BA41-0071?A:NANYA

DRAW	CHECK	APPROVAL

■ *Owner : SEC Mobile R & D* *Signature :* *X*

Sheet 1	Cover
Sheet 2-7	Diagram (Block/Power) & Annotations
Sheet 8	Clock Generator
Sheet 9	Thermal Sensor & FAN
Sheet 10-12	Merom-4M CPU
Sheet 13-17	Crestline-GMCH
Sheet 18	DDR II SODIMM A
Sheet 19	DDR II SODIMM B
Sheet 20-24	ICH8-M
Sheet 25	SPI ROM / 80 port
Sheet 26-30	NVIDIA GFX chipset
Sheet 31-32	GDDR3 GRAPHIC MEMORY
Sheet 33	LCD CONNECTOR
Sheet 34	CRT&TVO BUS SWITCH
Sheet 35	CRT CONNECTOR
Sheet 36-37	CARD BUS CONTROLER
Sheet 38	4 IN 1 CONNECTOR
Sheet 39	PCMCIA CONNECTOR
Sheet 40	MINICARD (WLAN, ROBSON)
Sheet 41	AUDIO - ALC262 (Codec1)
Sheet 42	AUDIO - POWER / SPEAKER / Codec2
Sheet 43	AUDIO - INTERNAL MIC
Sheet 44	AUDIO - HEADPHONE & MIC JACK
Sheet 45	AUDIO - POWER
Sheet 46	LAN
Sheet 47	LAN CONNECTOR / MODEM CONNECTOR
Sheet 48-49	ROBSON - DIAMOND LANK / NAND FLASH
Sheet 50	SIO
Sheet 51	MICOM
Sheet 52	MICOM RESET / ADAPTER IN / CHARGING LED
Sheet 53	POWER - SWITCHED POWER
Sheet 54	POWER - P1.5V
Sheet 55	POWER - P1.25V / P1.05V
Sheet 56	POWER - DDR2 power
Sheet 57	POWER - CHARGER & POWER MANAGEMENT
Sheet 58	POWER - P3.3V _AUX & P5.0V_AUX
Sheet 59	POWER - CPU VRM
Sheet 60	POWER - GFX CORE
Sheet 61	POWER - P2.5V
Sheet 62	HDD / ODD CONNECTOR
Sheet 63	CONNECTORS (USB / TPM / MDC / USB subboard)
Sheet 64	CONNECTORS (KBD / ONTOP / TOUCHPAD / HDMI)
Sheet 65	DOCKING CONNECTOR
Sheet 66-68	SUBBOARDS (TPM / USB / HDMI / ONTOP)
Sheet 69	MOUNT HOLES

DRAW YZ KIM	DATE 2/8/2007	TITLE SYDNEY SANTA ROSA STD COVER	SAMSUNG ELECTRONICS
CHECK SW PARK	DEV. STEP PR		
APPROVAL BJ LEE	REV 1.0		PART NO. BA41-0071#A
MODULE CODE	LAST EDIT February 8, 2007 10:00:08 PM		PAGE 1 OF 74

Samsung Confidential

http://hobi-elektronika.net

SAMSUNG PROPRIETARY
THIS DOCUMENT CONTAINS CONFIDENTIAL PROPRIETARY INFORMATION THAT IS SAMSUNG ELECTRONICS CO'S PROPERTY. DO NOT DISCLOSE TO OR DUPLICATE FOR OTHERS EXCEPT AS AUTHORIZED BY SAMSUNG.

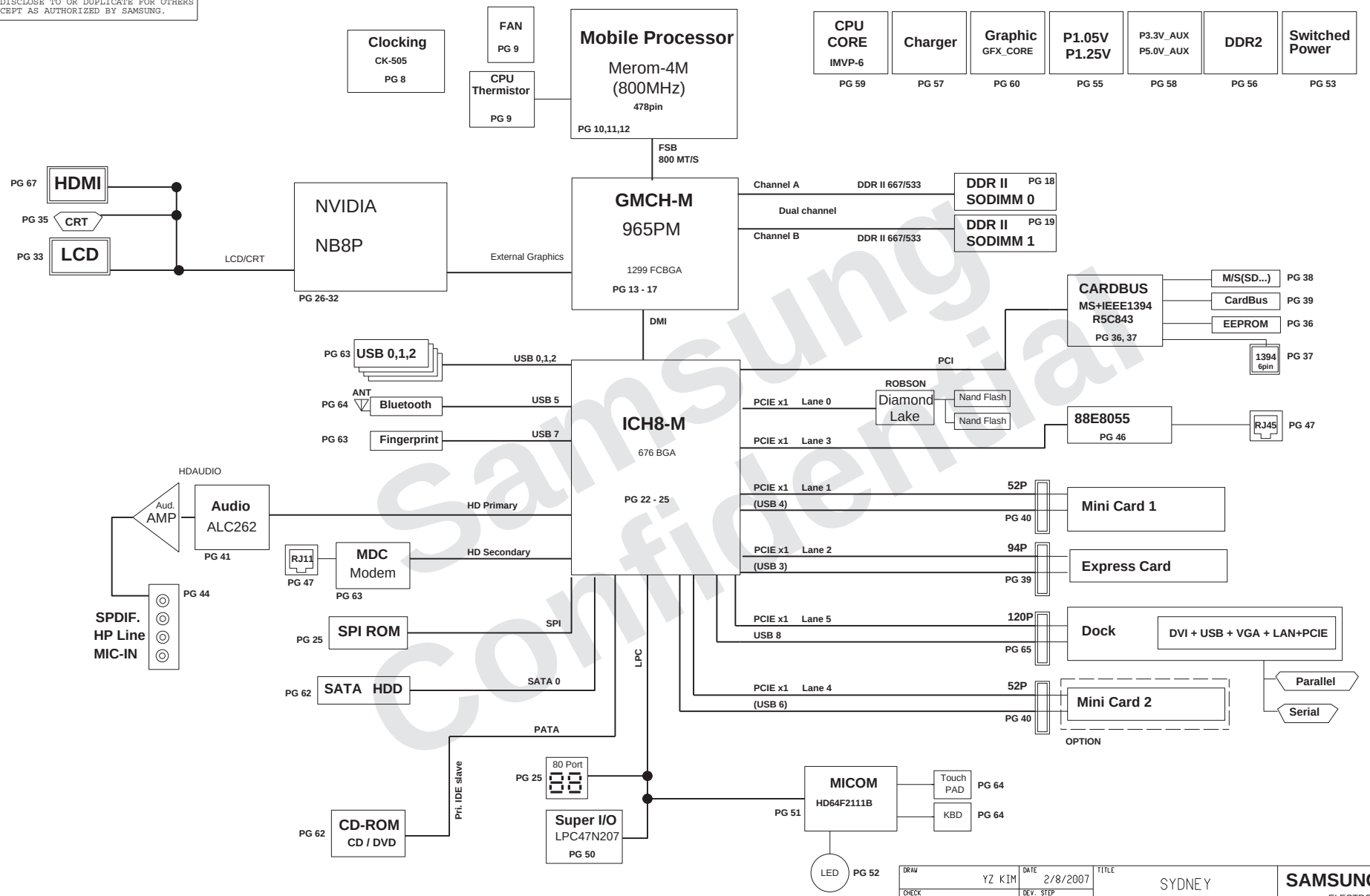

Samsung Confidential

DRAW YZ KIM	DATE 2/8/2007	TITLE SYDNEY BLOCK DIAGRAM	SAMSUNG ELECTRONICS
CHECK SW PARK	DEV. STEP PR		PART NO. BA41-0071#A
APPROVAL BJ LEE	REV 1.0		
MODULE CODE	LAST EDIT February 8, 2007 10:00:08 PM		PAGE 2 OF 74

http://hobi-elektronika.net

SAMSUNG PROPRIETARY
THIS DOCUMENT CONTAINS CONFIDENTIAL PROPRIETARY INFORMATION THAT IS SAMSUNG ELECTRONICS CO'S PROPERTY. DO NOT DISCLOSE TO OR DUPLICATE FOR OTHERS EXCEPT AS AUTHORIZED BY SAMSUNG.

BOARD INFORMATION

SCHEMATIC ANNOTATIONS AND BOARD INFORMATION

PCI Devices

Devices	IDSEL#	REQ/GNT#	Interrupts
Cardbus	AD25	0	A,B,C
USB	AD29(internal)	-	USB2.0 #0 (USB0) : A USB2.0 #1 (USB1) : D USB2.0 #2 (USB4) : C USB2.0 #3 (USB5) : E USB2.0 #4 (EHCI) : H
Hub to PCI	AD30(internal)	-	-
LPC bridge/IDE/AC97/SMBUS	AD31(internal)	-	B
Internal MAC	AD24(internal)	-	E
AC Link	-	-	B

Crystal / Oscillator

TYPE	FREQUENCY	DEVICE	USAGE
Crystal	32.768KHz	ICH8-M	Real Time Clock
Crystal	10MHz	MICOM	HD64F2169/2111B
Crystal	14.318MHz	CLOCK-Generator	CK-505
Crystal	24.576MHz	Cardbus Controller	1394
Crystal	25MHz	LAN	

Voltage Rails

VDC	Primary DC system power supply (7 to 21V)
CPU_CORE	Core Voltage for CPU
P1.05V	VCCP for CPU, Crestline & ICH8-M
P0.9V	0.9V switched power rail (off in S3-S5)
P1.25V	1.25V switched power rail (off in S3-S5)
P1.5V	1.5V switched power rail (off in S3-S5)
P1.8V	1.8V switched power rail (off in S3-S5)
P3.3V	3.3V switched power rail (off in S3-S5)
P5.0V	5.0V switched power rail (off in S3-S5)
EGFX_CORE	Core Volatge for GPU
P1.2V	1.2V switched power rail (off in S3-S5)
P2.5V	2.5V switched power rail (off in S3-S5)
MEM1_VREF	0.9V power rail for DDR (off in S4-S5)
P1.8V_AUX	1.8V power rail for DDR (off in S4-S5)
P3.3V_AUX	3.3V power rail (off in S4-S5)
P5.0V_AUX	5.0V power rail (off in S4-S5)
P3V_MICOM	3.3V always power rail
P3.3V_ALW	3.3V always power rail (only AC mode)
P3.3V_LAN	3.3V always power rail (only AC mode)

I²C / SMB Address

Devices	Address	Hex	Bus
ICH8-M	Master	-	SMBUS Master
SODIMM0	1010 000X	A0h	-
SODIMM1	1010 001X	A4h	-
CK-505	1010 001x	D2h	-
MICOM	Master	-	SMBUS Master
EMC2102	0101 101X	7Ah	Thermal Sensor
BATTERY	0001 011X	16h	

USB PORT Assign

PORT #	ASSIGNED TO
0	SYSTEM PORT 0
1	SYSTEM PORT 1
2	SYSTEM PORT 2
3	(Express Card)
4	(Mini Card 1)
5	Bluetooth
6	(Mini Card 2)
7	Fingerprint
8	DOCKING
9	-

PCI Express Assign

PORT #	ASSIGNED TO
0	ROBSON
1	Mini Card 1
2	Express Card
3	GLAN
4	Mini Card 2
5	DOCKING

Samsung Confidential

http://hobi-elektronika.net

DRAW: YZ KIM	DATE: 2/8/2007	TITLE: SYDNEY BOARD INFO	SAMSUNG ELECTRONICS
CHECK: SW PARK	DEV. STEP: PR		
APPROVAL: BJ LEE	REV: 1.0		PART NO. BA41-0071#A
MODULE CODE: undefined	LAST EDIT: February 8, 2007 10:00:08 PM		PAGE 3 OF 74

SAMSUNG PROPRIETARY
THIS DOCUMENT CONTAINS CONFIDENTIAL PROPRIETARY INFORMATION THAT IS SAMSUNG ELECTRONICS CO'S PROPERTY. DO NOT DISCLOSE TO OR DUPLICATE FOR OTHERS EXCEPT AS AUTHORIZED BY SAMSUNG.

POWER DIAGRAM

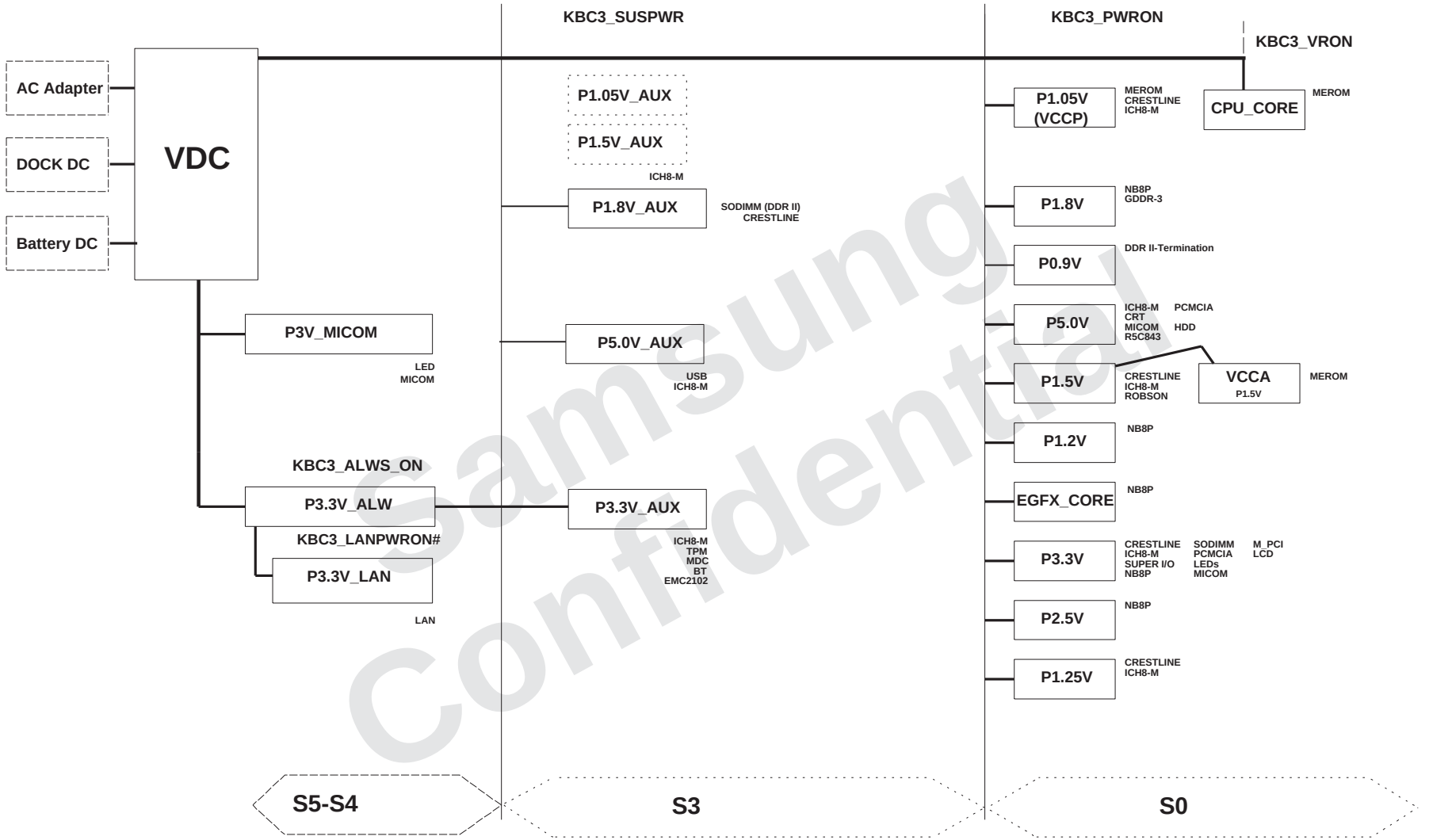

Samsung Confidential

http://hobi-elektronika.net

DRAW: YZ KIM	DATE: 2/8/2007	TITLE: SYDNEY	SAMSUNG ELECTRONICS
CHECK: SW PARK	DEV. STEP: PR	POWER DIAGRAM	PART NO. BA41-0071#A
APPROVAL: BJ LEE	REV: 1.0		
MODULE CODE: undefined	LAST EDIT: February 8, 2007 10:00:08 PM	PAGE 4 OF 74	

SAMSUNG PROPRIETARY
THIS DOCUMENT CONTAINS CONFIDENTIAL PROPRIETARY INFORMATION THAT IS SAMSUNG ELECTRONICS CO'S PROPERTY. DO NOT DISCLOSE TO OR DUPLICATE FOR OTHERS EXCEPT AS AUTHORIZED BY SAMSUNG.

POWER RAILS ANALYSIS

Rev. 0.8

This sheet should be updated !!!

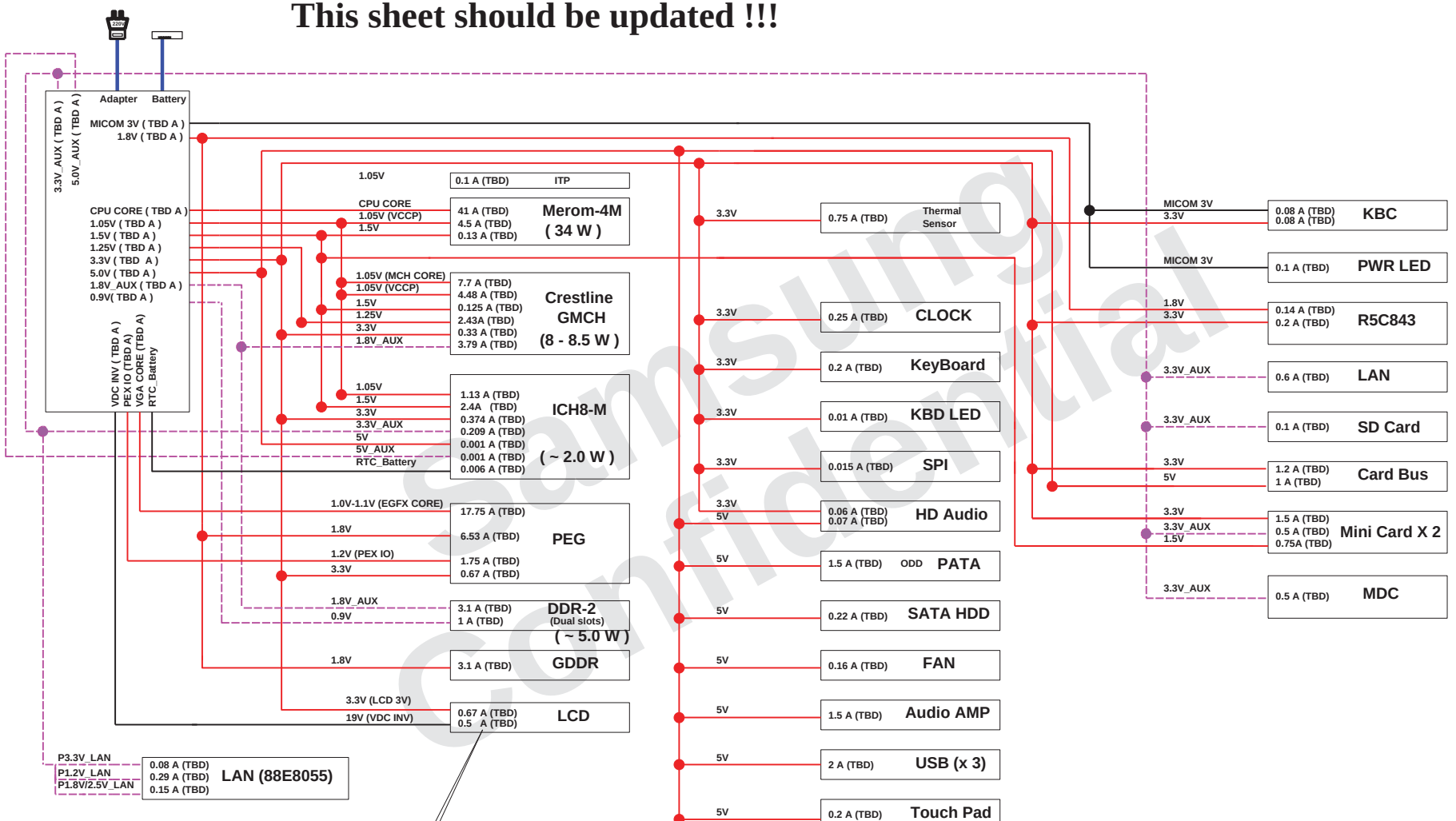

Value by Datasheet/Application notes (Value by measurement)

Samsung Confidential

http://hobi-elektronika.net

DRAW: YZ KIM	DATE: 2/8/2007	TITLE: SYDNEY	SAMSUNG ELECTRONICS
CHECK: SW PARK	DEV. STEP: PR	POWER RAILS	PART NO. BA41-0071#A
APPROVAL: BJ LEE	REV: 1.0		
MODULE CODE: undefined	LAST EDIT: February 8, 2007 10:00:08 PM	PAGE 5 OF 74	

SAMSUNG PROPRIETARY
THIS DOCUMENT CONTAINS CONFIDENTIAL PROPRIETARY INFORMATION THAT IS SAMSUNG ELECTRONICS CO'S PROPERTY. DO NOT DISCLOSE TO OR DUPLICATE FOR OTHERS EXCEPT AS AUTHORIZED BY SAMSUNG.

TO BE UPDATED!!

POWER SEQUENCE

Rev. 0.5

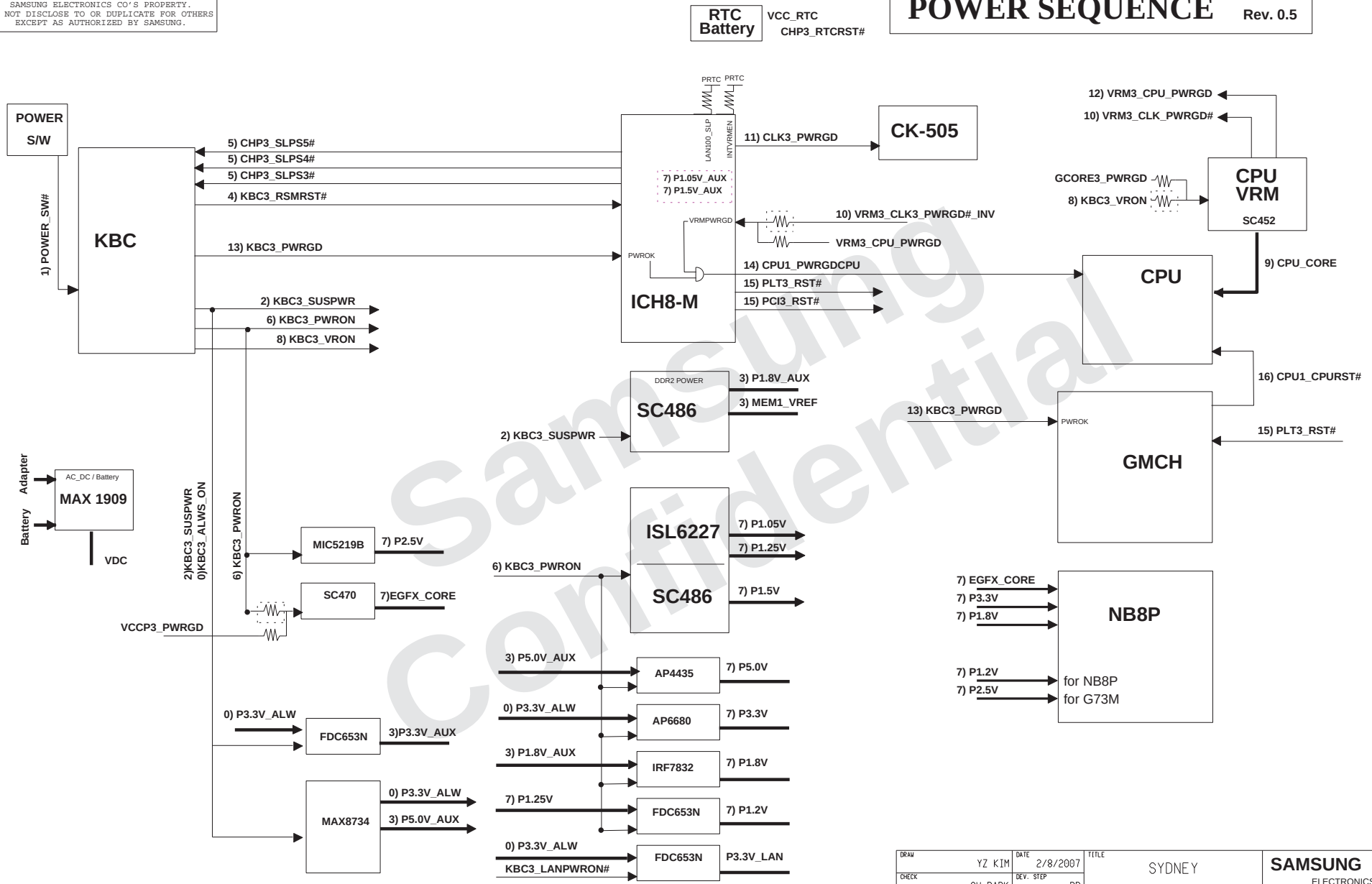

Samsung Confidential

http://hobi-elektronika.net

DRAW: YZ KIM	DATE: 2/8/2007	TITLE: SYDNEY POWER SEQUENCE	SAMSUNG ELECTRONICS
CHECK: SW PARK	DEV. STEP: PR		
APPROVAL: BJ LEE	REV: 1.0		PART NO. BA41-0071#A
MODULE CODE: undefined	LAST EDIT: February 8, 2007 10:00:08 PM		PAGE 6 OF 74

SAMSUNG PROPRIETARY
THIS DOCUMENT CONTAINS CONFIDENTIAL PROPRIETARY INFORMATION THAT IS SAMSUNG ELECTRONICS CO'S PROPERTY. DO NOT DISCLOSE TO OR DUPLICATE FOR OTHERS EXCEPT AS AUTHORIZED BY SAMSUNG.

CLOCK DISTRIBUTION Rev. 0.8

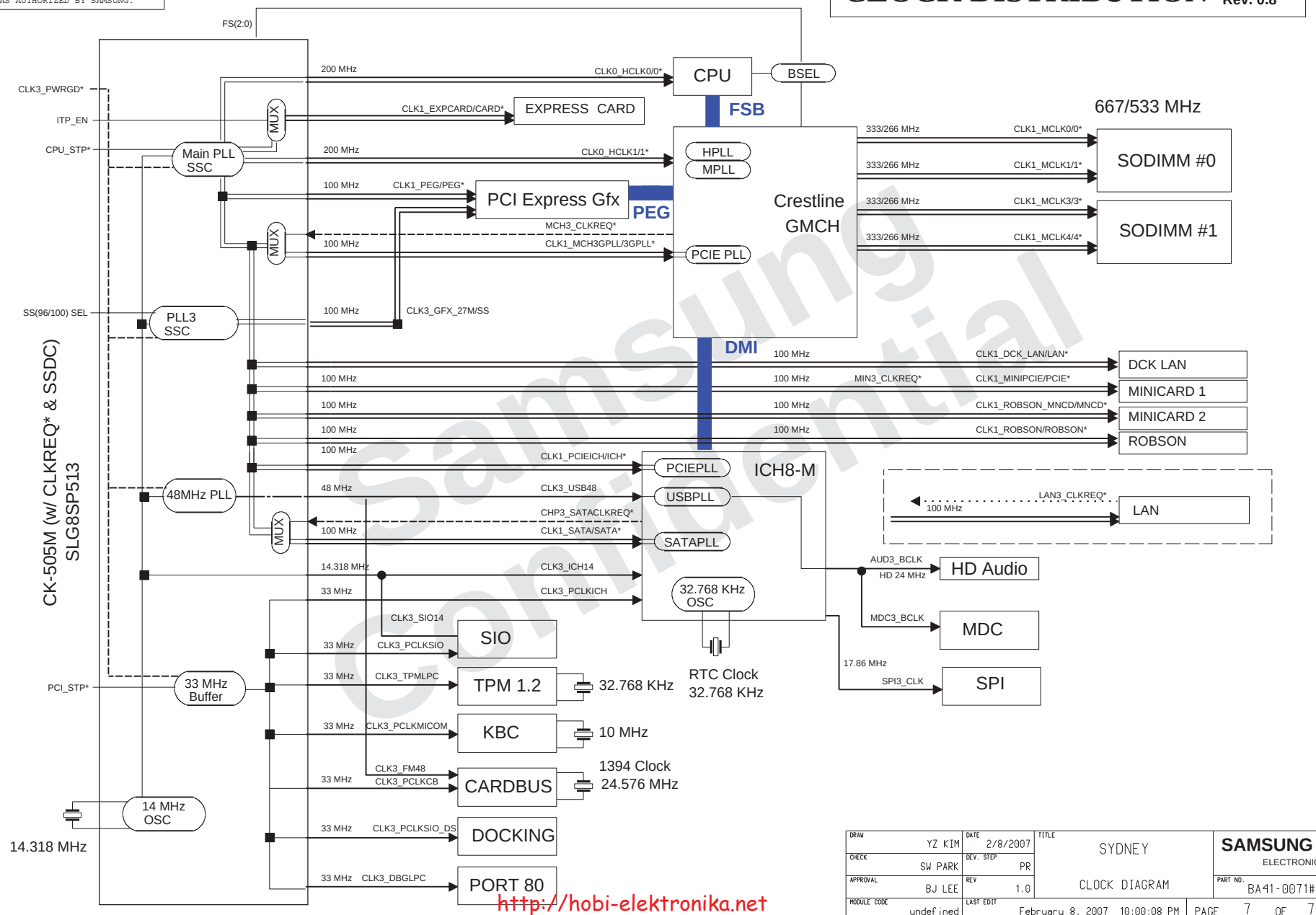

Samsung Confidential

http://hobi-elektronika.net

DRAW: YZ KIM	DATE: 2/8/2007	TITLE: SYDNEY CLOCK DIAGRAM	SAMSUNG ELECTRONICS
CHECK: SW PARK	DEV. STEP: PR		PART NO. BA41-0071#A
APPROVAL: BJ LEE	REV: 1.0		
MODULE CODE: undefined	LAST EDIT: February 8, 2007 10:00:08 PM	PAGE 7 OF 74	

SAMSUNG PROPRIETARY
THIS DOCUMENT CONTAINS CONFIDENTIAL PROPRIETARY INFORMATION THAT IS SAMSUNG ELECTRONICS CO'S PROPERTY. DO NOT DISCLOSE TO OR DUPLICATE FOR OTHERS EXCEPT AS AUTHORIZED BY SAMSUNG.

FSA BSEL0	FSB BSEL1	FSC BSEL2	HOST CLK
0	0	0	266 MHz
0	0	1	333 MHz
0	1	0	200 MHz
0	1	1	400 MHz
1	0	0	133 MHz
1	0	1	100 MHz
1	1	0	166 MHz
1	1	1	RSVD

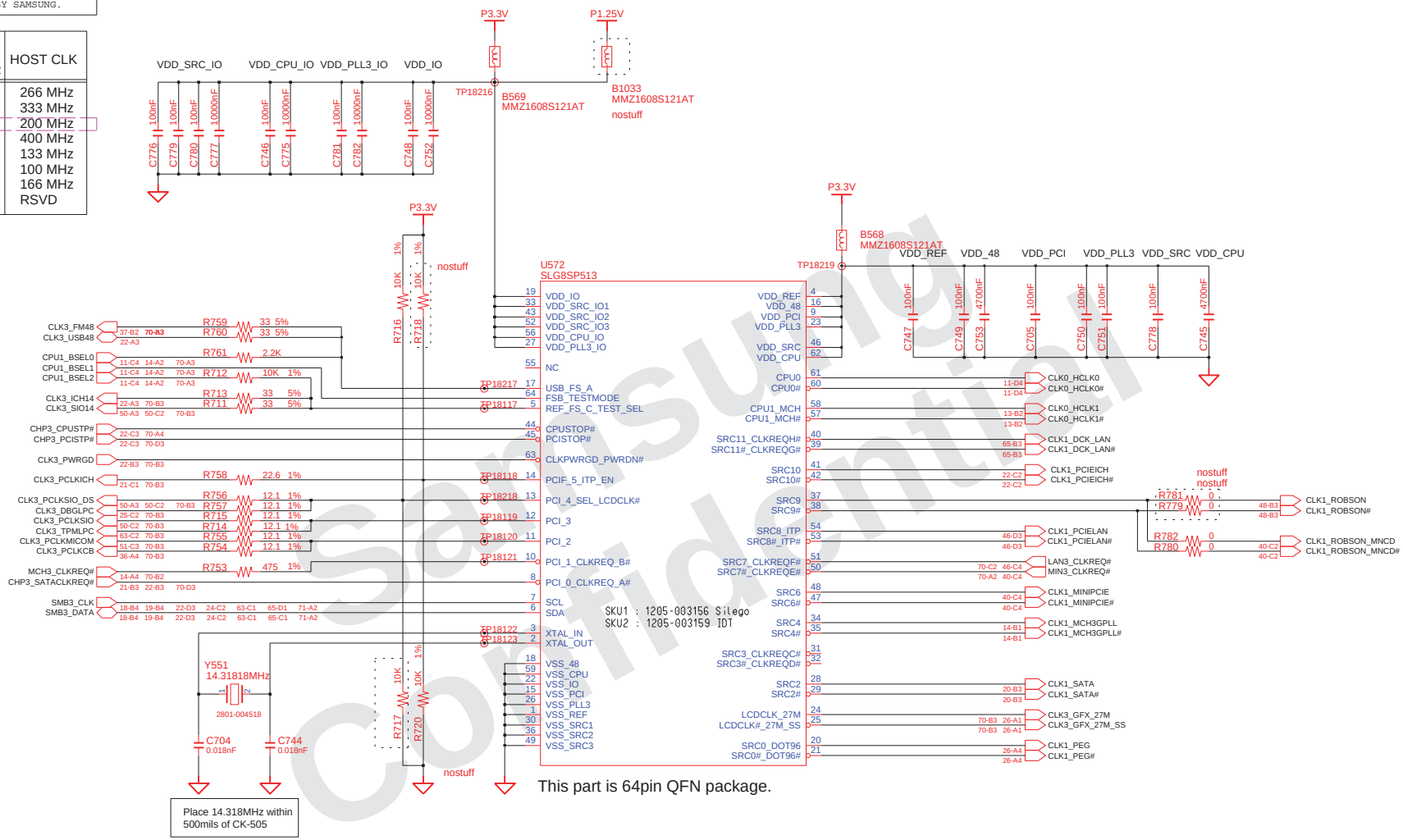

CLK REQ	DEVICE	SRC PORT
CLK REQ A	SATA	SRC2
CLK REQ B	GMCH	SRC4
CLK REQ E	MINI CARD	SRC6
CLK REQ F	LAN	SRC8

SEL_LCDCLK# (24,25,20,21)

LOW	LCD CLK / DOT96
HIGH	27M / SRC0

Samsung Confidential

http://hobi-elektronika.net

DRAW: YZ KIM	DATE: 2/8/2007	TITLE: SYDNEY CLOCK GENERATOR CK-505	SAMSUNG ELECTRONICS
CHECK: SW PARK	DEV. STEP: PR		PART NO. BA41-0071#A
APPROVAL: BJ LEE	REV: 1.0		
MODULE CODE: undefined	LAST EDIT: February 8, 2007 10:00:08 PM		PAGE 8 OF 74

SAMSUNG PROPRIETARY
THIS DOCUMENT CONTAINS CONFIDENTIAL PROPRIETARY INFORMATION THAT IS SAMSUNG ELECTRONICS CO'S PROPERTY. DO NOT DISCLOSE TO OR DUPLICATE FOR OTHERS EXCEPT AS AUTHORIZED BY SAMSUNG.

THERMAL SENSOR & FAN CONTROL

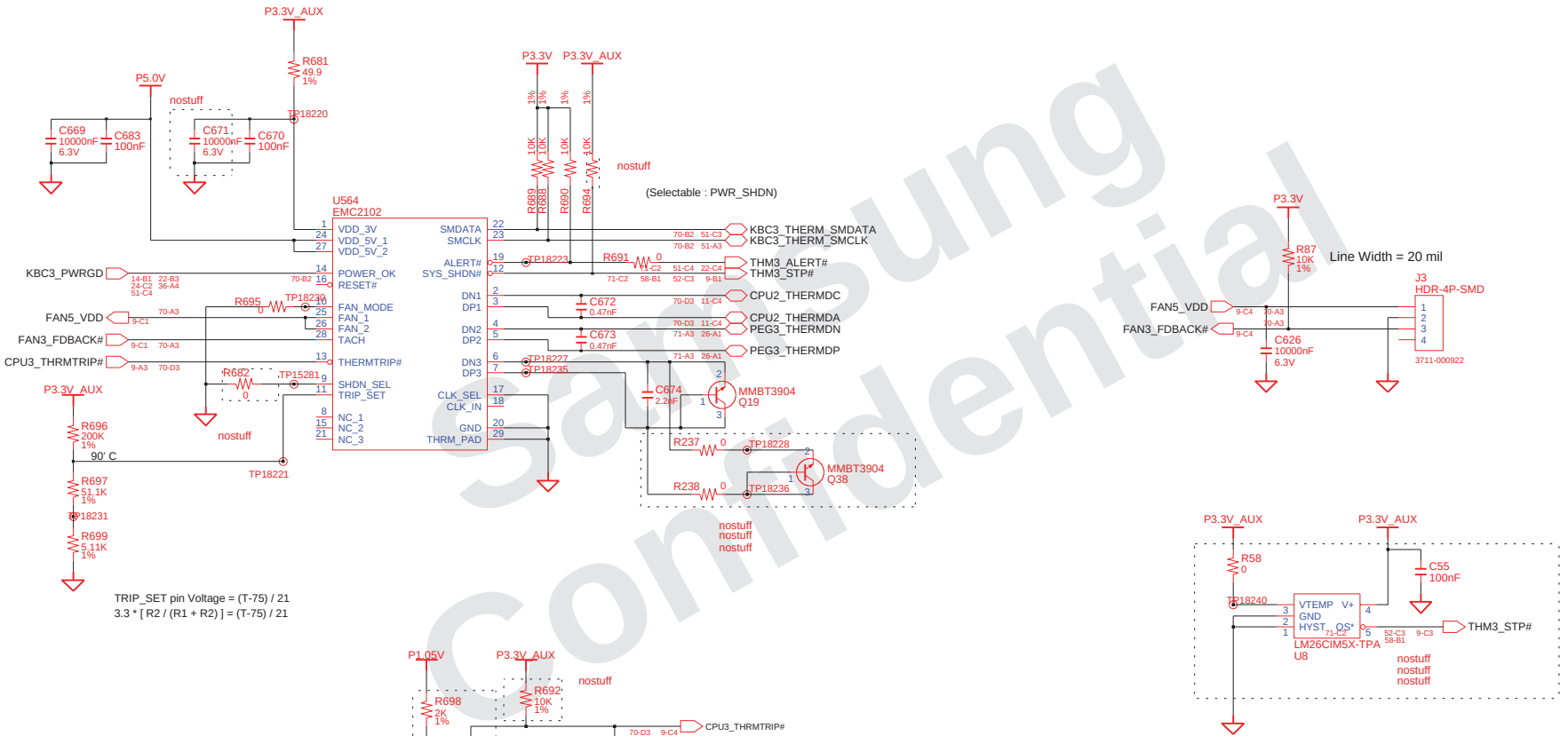

Samsung Confidential

http://hobi-elektronika.net

DRAW: YZ KIM	DATE: 2/8/2007	TITLE: SYDNEY THERMAL BLOCK THERMAL & FAN CONTROL	SAMSUNG ELECTRONICS
CHECK: SW PARK	DEV. STEP: PR		PART NO. BA41-0071#A
APPROVAL: BJ LEE	REV: 1.0		
MODULE CODE	LAST EDIT: February 8, 2007 10:00:08 PM	PAGE 9 OF 74	

SAMSUNG PROPRIETARY
THIS DOCUMENT CONTAINS CONFIDENTIAL PROPRIETARY INFORMATION THAT IS SAMSUNG ELECTRONICS CO'S PROPERTY. DO NOT DISCLOSE TO OR DUPLICATE FOR OTHERS EXCEPT AS AUTHORIZED BY SAMSUNG.

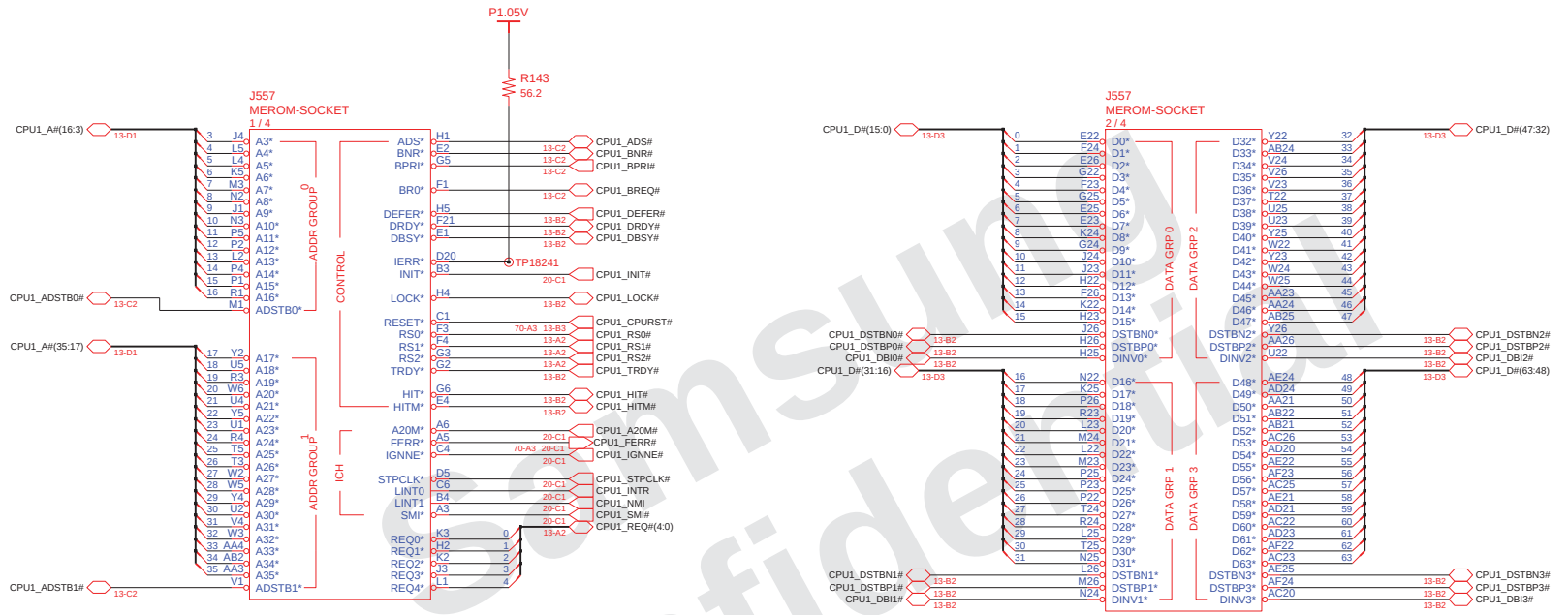

**NOTE

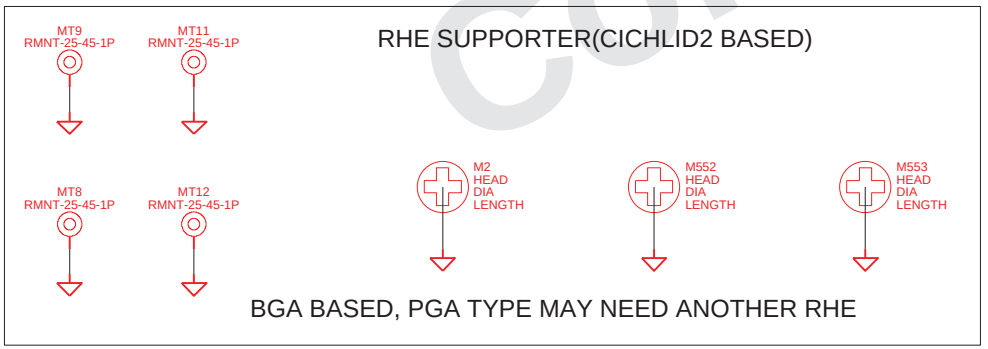

Samsung Confidential

http://hobi-elektronika.net

DRAW: YZ KIM	DATE: 2/8/2007	TITLE: SYDNEY CPU MEROM (1/3)	SAMSUNG ELECTRONICS
CHECK: SW PARK	DEV. STEP: PR		PART NO. BA41-0071#A
APPROVAL: BJ LEE	REV: 1.0		
MODULE CODE: undefined	LAST EDIT: February 8, 2007 10:00:08 PM		PAGE 10 OF 74

SAMSUNG PROPRIETARY
THIS DOCUMENT CONTAINS CONFIDENTIAL PROPRIETARY INFORMATION THAT IS SAMSUNG ELECTRONICS CO'S PROPERTY. DO NOT DISCLOSE TO OR DUPLICATE FOR OTHERS EXCEPT AS AUTHORIZED BY SAMSUNG.

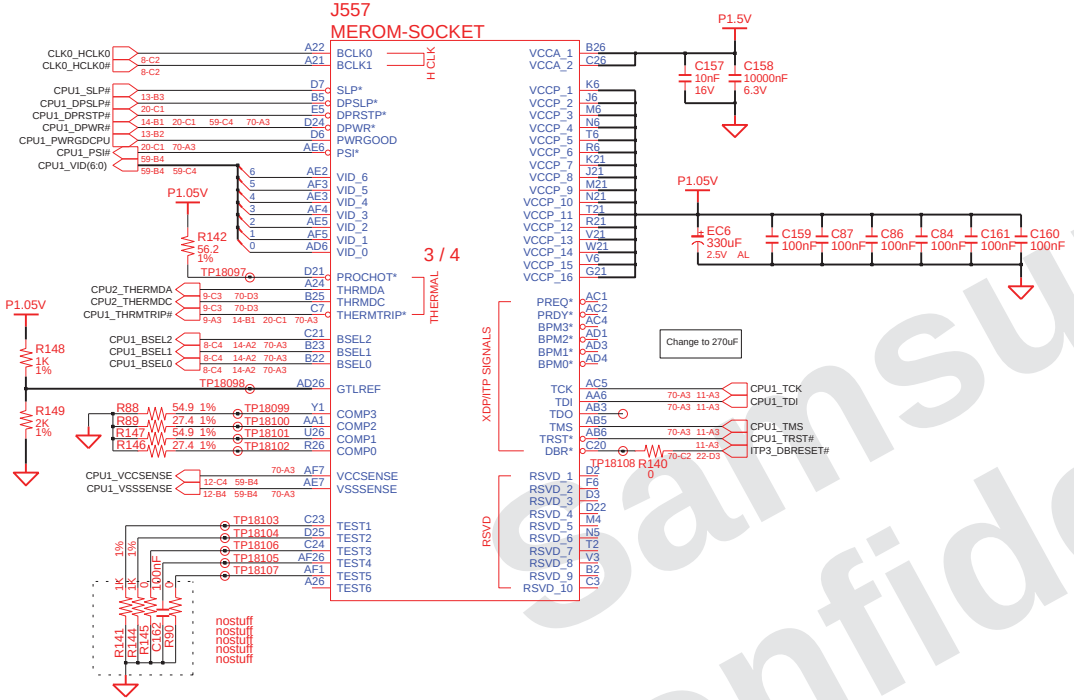

CPU Core Voltage Table

IMVP-6

Active Mode VID(6:0)	Voltage	Active/Deeper Sleep Dual Mode Region VID(6:0)	Voltage	Deeper Sleep/Extended Deeper Sleep Dual Mode Region VID(6:0)	Voltage
0 0 0 0 0 0 0	1.5000 V	0 1 0 1 0 0 0	1.0000 V	1 0 1 0 0 0 1	0.4875 V
0 0 0 0 0 0 1	1.4875 V	0 1 0 1 0 0 1	0.9875 V	1 0 1 0 0 1 0	0.4750 V
0 0 0 0 0 1 0	1.4750 V	0 1 0 1 0 1 0	0.9750 V	1 0 1 0 0 1 1	0.4625 V
0 0 0 0 0 1 1	1.4625 V	0 1 0 1 0 1 1	0.9625 V	1 0 1 0 1 0 0	0.4500 V
0 0 0 0 1 0 0	1.4500 V	0 1 0 1 1 0 0	0.9500 V	1 0 1 0 1 0 1	0.4375 V
0 0 0 0 1 0 1	1.4375 V	0 1 0 1 1 0 1	0.9375 V	1 0 1 0 1 1 0	0.4250 V
0 0 0 0 1 1 0	1.4250 V	0 1 0 1 1 1 0	0.9250 V	1 0 1 0 1 1 1	0.4125 V
0 0 0 0 1 1 1	1.4125 V	0 1 0 1 1 1 1	0.9125 V	1 0 1 1 0 0 0	0.4000 V
0 0 0 1 0 0 0	1.4000 V	0 1 1 0 0 0 0	0.9000 V	1 0 1 1 0 0 1	0.3875 V
0 0 0 1 0 0 1	1.3875 V	0 1 1 0 0 0 1	0.8875 V	1 0 1 1 0 1 0	0.3750 V
0 0 0 1 0 1 0	1.3750 V	0 1 1 0 0 1 0	0.8750 V	1 0 1 1 0 1 1	0.3625 V
0 0 0 1 0 1 1	1.3625 V	0 1 1 0 0 1 1	0.8625 V	1 0 1 1 1 0 0	0.3500 V
0 0 0 1 1 0 0	1.3500 V	0 1 1 0 1 0 0	0.8500 V	1 0 1 1 1 0 1	0.3375 V
0 0 0 1 1 0 1	1.3375 V	0 1 1 0 1 0 1	0.8375 V	1 0 1 1 1 1 0	0.3250 V
0 0 0 1 1 1 0	1.3250 V	0 1 1 0 1 1 0	0.8250 V	1 0 1 1 1 1 1	0.3125 V
0 0 0 1 1 1 1	1.3125 V	0 1 1 0 1 1 1	0.8125 V	1 1 0 0 0 0 0	0.3000 V
0 0 1 0 0 0 0	1.3000 V	0 1 1 1 0 0 0	0.8000 V	1 1 0 0 0 0 1	0.2875 V
0 0 1 0 0 0 1	1.2875 V	0 1 1 1 0 0 1	0.7875 V	1 1 0 0 0 1 0	0.2750 V
0 0 1 0 0 1 0	1.2750 V	0 1 1 1 0 1 0	0.7750 V	1 1 0 0 0 1 1	0.2625 V
0 0 1 0 0 1 1	1.2625 V	0 1 1 1 0 1 1	0.7625 V	1 1 0 0 1 0 0	0.2500 V
0 0 1 0 1 0 0	1.2500 V	0 1 1 1 1 0 0	0.7500 V	1 1 0 0 1 0 1	0.2375 V
0 0 1 0 1 0 1	1.2375 V	0 1 1 1 1 0 1	0.7375 V	1 1 0 0 1 1 0	0.2250 V
0 0 1 0 1 1 0	1.2250 V	0 1 1 1 1 1 0	0.7250 V	1 1 0 0 1 1 1	0.2125 V
0 0 1 0 1 1 1	1.2125 V	0 1 1 1 1 1 1	0.7125 V	1 1 0 1 0 0 0	0.2000 V
0 0 1 1 0 0 0	1.2000 V	1 0 0 0 0 0 0	0.7000 V	1 1 0 1 0 0 1	0.1875 V
0 0 1 1 0 0 1	1.1875 V	1 0 0 0 0 0 1	0.6875 V	1 1 0 1 0 1 0	0.1750 V
0 0 1 1 0 1 0	1.1750 V	1 0 0 0 0 1 0	0.6750 V	1 1 0 1 0 1 1	0.1625 V
0 0 1 1 0 1 1	1.1625 V	1 0 0 0 0 1 1	0.6625 V	1 1 0 1 1 0 0	0.1500 V
0 0 1 1 1 0 0	1.1500 V	1 0 0 0 1 0 0	0.6500 V	1 1 0 1 1 0 1	0.1375 V
0 0 1 1 1 0 1	1.1375 V	1 0 0 0 1 0 1	0.6375 V	1 1 0 1 1 1 0	0.1250 V
0 0 1 1 1 1 0	1.1250 V	1 0 0 0 1 1 0	0.6250 V	1 1 0 1 1 1 1	0.1125 V
0 0 1 1 1 1 1	1.1125 V	1 0 0 0 1 1 1	0.6125 V	1 1 1 0 0 0 0	0.1000 V
0 1 0 0 0 0 0	1.1000 V	1 0 0 1 0 0 0	0.6000 V	1 1 1 0 0 0 1	0.0875 V
0 1 0 0 0 0 1	1.0875 V	1 0 0 1 0 0 1	0.5875 V	1 1 1 0 0 1 0	0.0750 V
0 1 0 0 0 1 0	1.0750 V	1 0 0 1 0 1 0	0.5750 V	1 1 1 0 0 1 1	0.0625 V
0 1 0 0 0 1 1	1.0625 V	1 0 0 1 0 1 1	0.5625 V	1 1 1 0 1 0 0	0.0500 V
0 1 0 0 1 0 0	1.0500 V	1 0 0 1 1 0 0	0.5500 V	1 1 1 0 1 0 1	0.0375 V
0 1 0 0 1 0 1	1.0375 V	1 0 0 1 1 0 1	0.5375 V	1 1 1 0 1 1 0	0.0250 V
0 1 0 0 1 1 0	1.0250 V	1 0 0 1 1 1 0	0.5250 V	1 1 1 0 1 1 1	0.0125 V
0 1 0 0 1 1 1	1.0125 V	1 0 0 1 1 1 1	0.5125 V	1 1 1 1 0 0 0	0.0000 V
		1 0 1 0 0 0 0	0.5000 V	1 1 1 1 0 0 1	0.0000 V
				1 1 1 1 0 1 0	0.0000 V
				1 1 1 1 0 1 1	0.0000 V
				1 1 1 1 1 0 0	0.0000 V
				1 1 1 1 1 0 1	0.0000 V
				1 1 1 1 1 1 0	0.0000 V
				1 1 1 1 1 1 1	0.0000 V

Active

DPRSLPVR	0
DPRSTP*	1
PSI2*	0 or 1

Deeper Slp

DPRSLPVR	1
DPRSTP*	0
PSI2*	0 or 1

*"1111111" : 0V power good asserted.

*Yonah Processor (2.33 GHz / 800 MHz : TBD)

GTLREF : Keep the Voltage divider within 0.5" of the first GTLREF0 pin with Zo=55ohm trace. Minimize coupling of any switching signals to this net.

COMP0,2(COMP1,3) should be connected with Zo=27.4ohm(55ohm) trace shorter than 1/2" to their respective Banias socket pins.

GND test points within 100mil of the VCC/VSSsense at the end of the line. Route the VCC/VSSsense as a Zo=55ohm traces with equal length. Observe 3:1 spacing b/w VCC/VSSsense lines and 25mil away (preferred 50mil) from any other signal. And GND via 100mil away from each of the VCC/VSS test point vias.

BSEL & ITP DISABLE

FSA BSEL0	FSB BSEL1	FSC BSEL2	HOST CLK
0	1	0	200 MHz
1	1	0	166 MHz

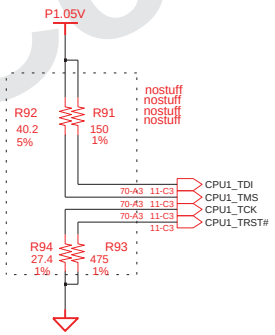

Samsung Confidential

http://hobi-elektronika.net

DRAW: YZ KIM	DATE: 2/8/2007	TITLE: SYDNEY CPU MEROM (2/3)	SAMSUNG ELECTRONICS
CHECK: SW PARK	DEV. STEP: PR		PART NO. BA41-0071#A
APPROVAL: BJ LEE	REV: 1.0		
MODULE CODE: undefined	LAST EDIT: February 8, 2007 10:00:08 PM		PAGE 11 OF 74

SAMSUNG PROPRIETARY
THIS DOCUMENT CONTAINS CONFIDENTIAL PROPRIETARY INFORMATION THAT IS SAMSUNG ELECTRONICS CO'S PROPERTY. DO NOT DISCLOSE TO OR DUPLICATE FOR OTHERS EXCEPT AS AUTHORIZED BY SAMSUNG.

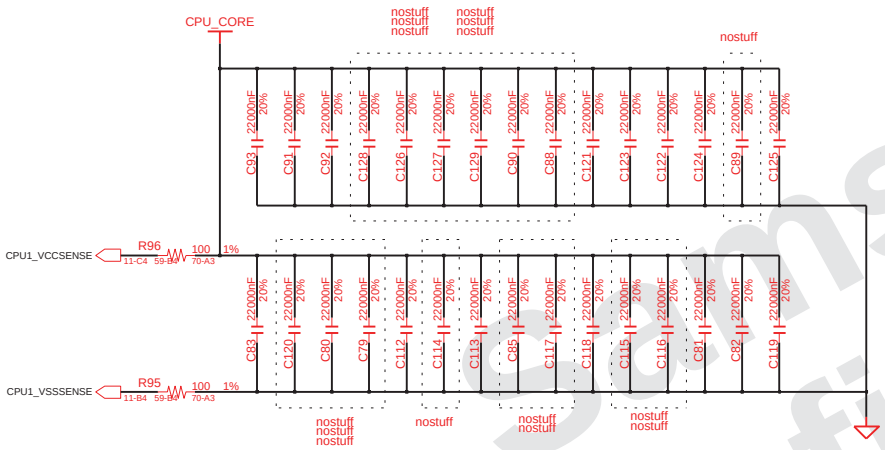

4x 330 uF : CPU VR side

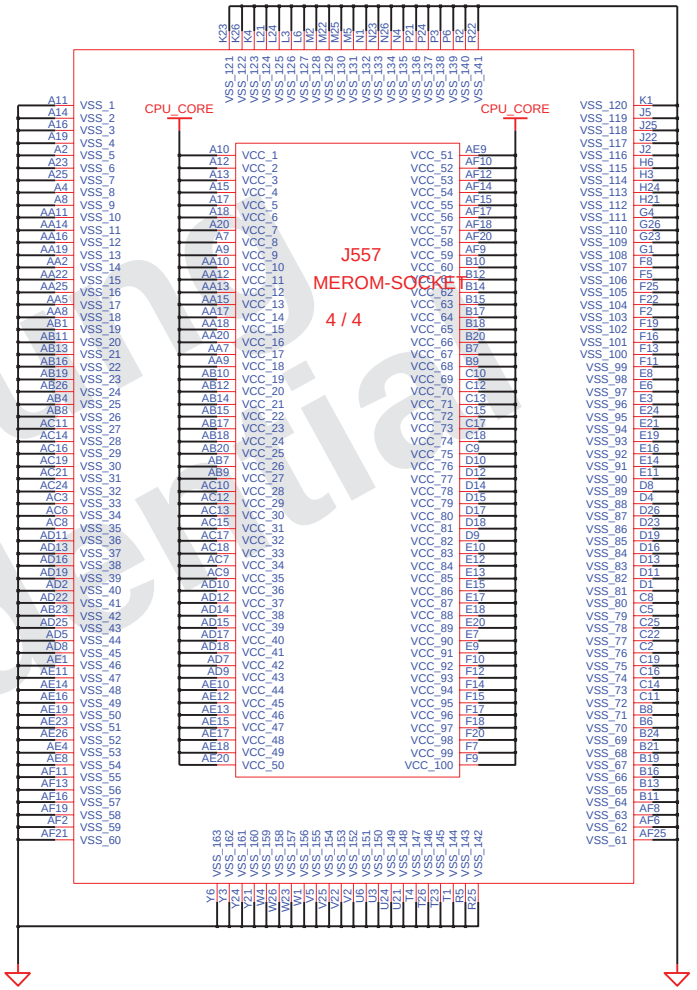

Samsung Confidential

http://hobi-elektronika.net

DRAW YZ KIM	DATE 2/8/2007	TITLE SYDNEY CPU MEROM (3/3)	SAMSUNG ELECTRONICS
CHECK SW PARK	DEV. STEP PR		PART NO. BA41-0071#A
APPROVAL BJ LEE	REV 1.0		
MODULE CODE undefined	LAST EDIT February 8, 2007 10:00:08 PM		PAGE 12 OF 74

SAMSUNG PROPRIETARY

THIS DOCUMENT CONTAINS CONFIDENTIAL PROPRIETARY INFORMATION THAT IS SAMSUNG ELECTRONICS CO'S PROPERTY. DO NOT DISCLOSE TO OR DUPLICATE FOR OTHERS EXCEPT AS AUTHORIZED BY SAMSUNG.

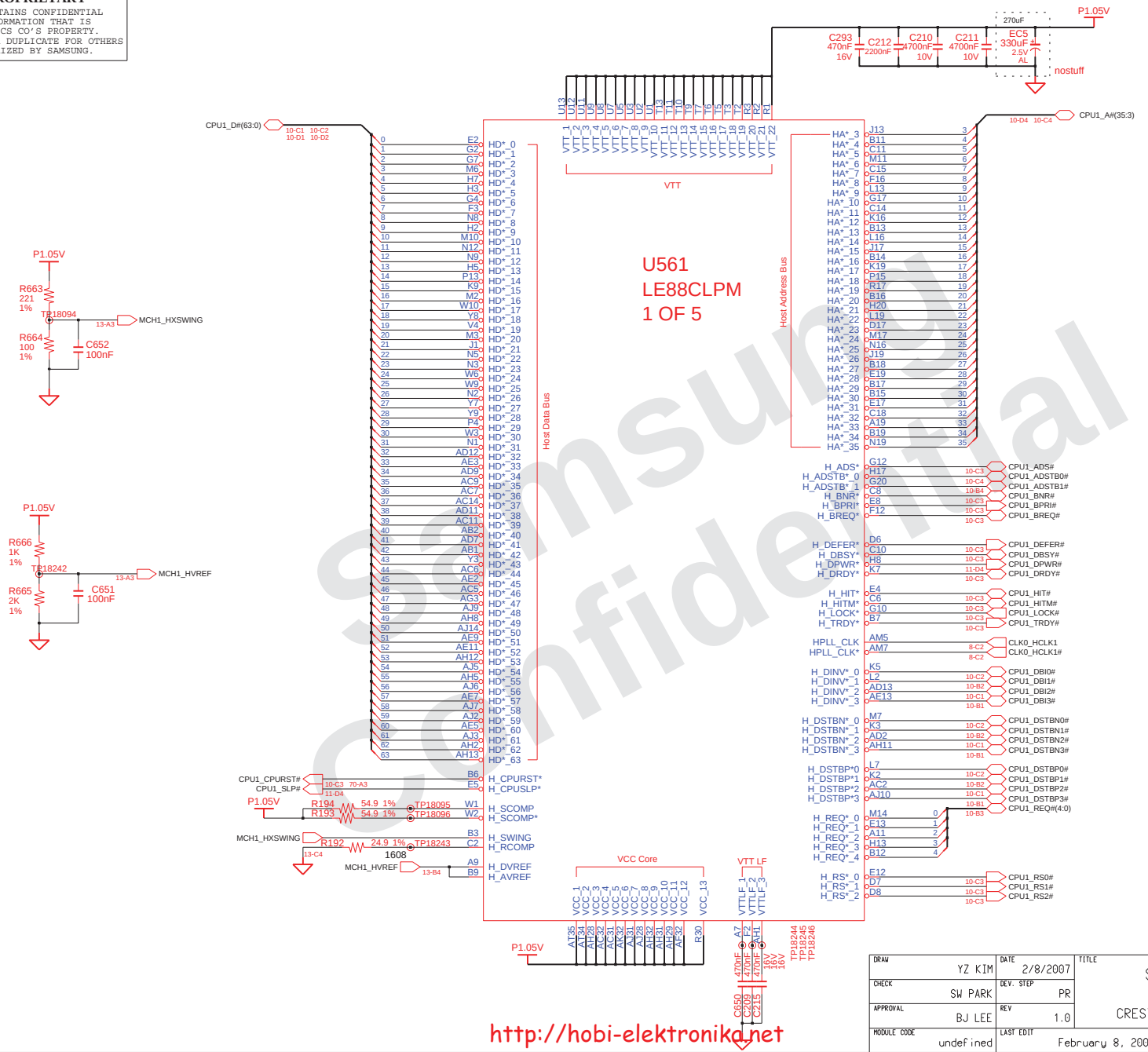

Samsung Confidential

http://hobi-elektronika.net

DRAW: YZ KIM	DATE: 2/8/2007	TITLE: SYDNEY GMCH CRESTLINE (1/5)	SAMSUNG ELECTRONICS
CHECK: SW PARK	DEV. STEP: PR		PART NO. BA41-0071#A
APPROVAL: BJ LEE	REV: 1.0		
MODULE CODE: undefined	LAST EDIT: February 8, 2007 10:00:08 PM		PAGE 13 OF 74

SAMSUNG PROPRIETARY
THIS DOCUMENT CONTAINS CONFIDENTIAL PROPRIETARY INFORMATION THAT IS SAMSUNG ELECTRONICS CO'S PROPERTY. DO NOT DISCLOSE TO OR DUPLICATE FOR OTHERS EXCEPT AS AUTHORIZED BY SAMSUNG.

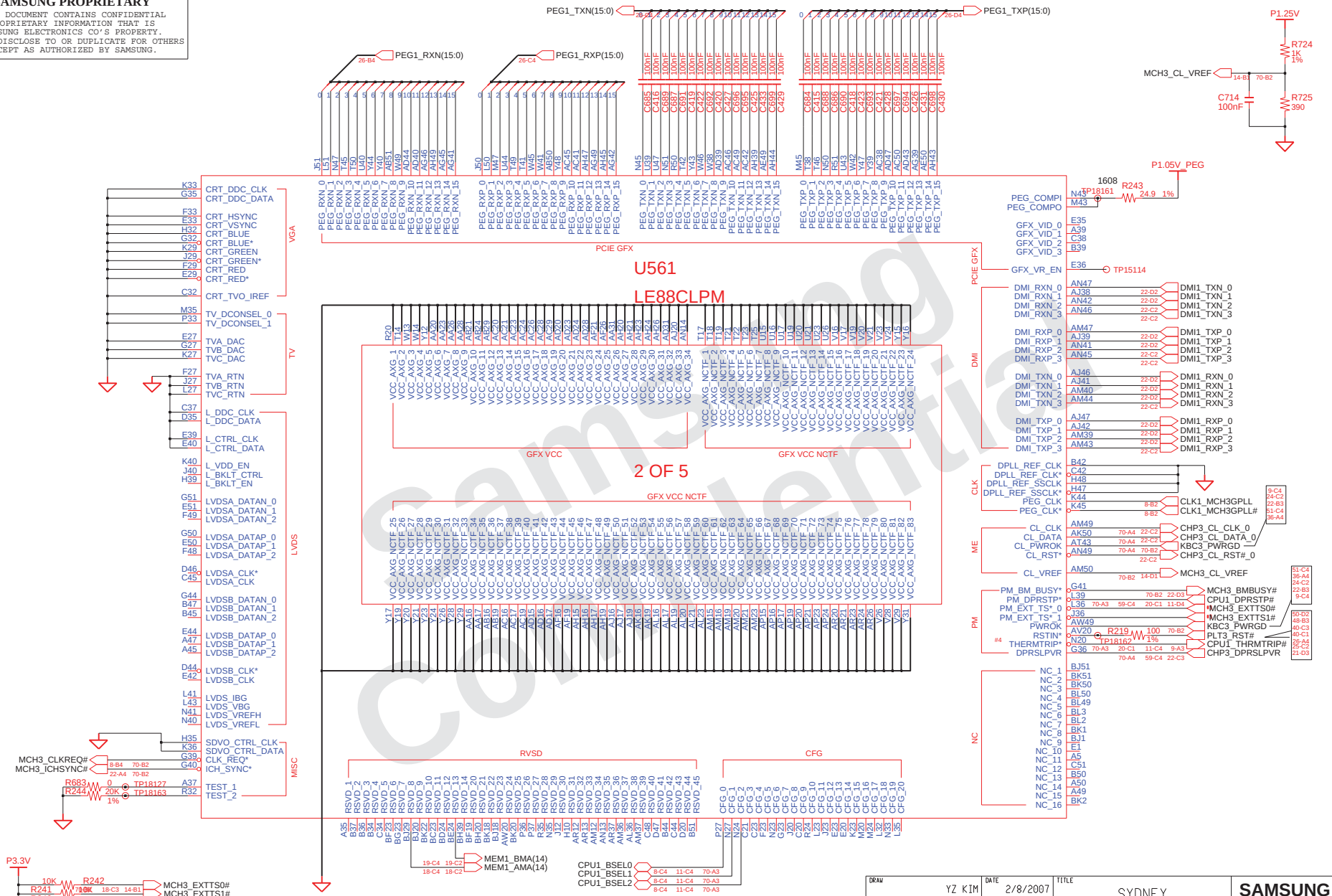

http://hobi-elektronika.net

DRAW: YZ KIM	DATE: 2/8/2007	TITLE: SYDNEY GMCH CRESTLINE (2/5)	SAMSUNG ELECTRONICS
CHECK: SW PARK	DEV. STEP: PR		
APPROVAL: BJ LEE	REV: 1.0		PART NO. BA41-0071#A
MODULE CODE: undefined	LAST EDIT: February 8, 2007 10:00:08 PM		PAGE 14 OF 74

SAMSUNG PROPRIETARY
THIS DOCUMENT CONTAINS CONFIDENTIAL PROPRIETARY INFORMATION THAT IS SAMSUNG ELECTRONICS CO'S PROPERTY. DO NOT DISCLOSE TO OR DUPLICATE FOR OTHERS EXCEPT AS AUTHORIZED BY SAMSUNG.

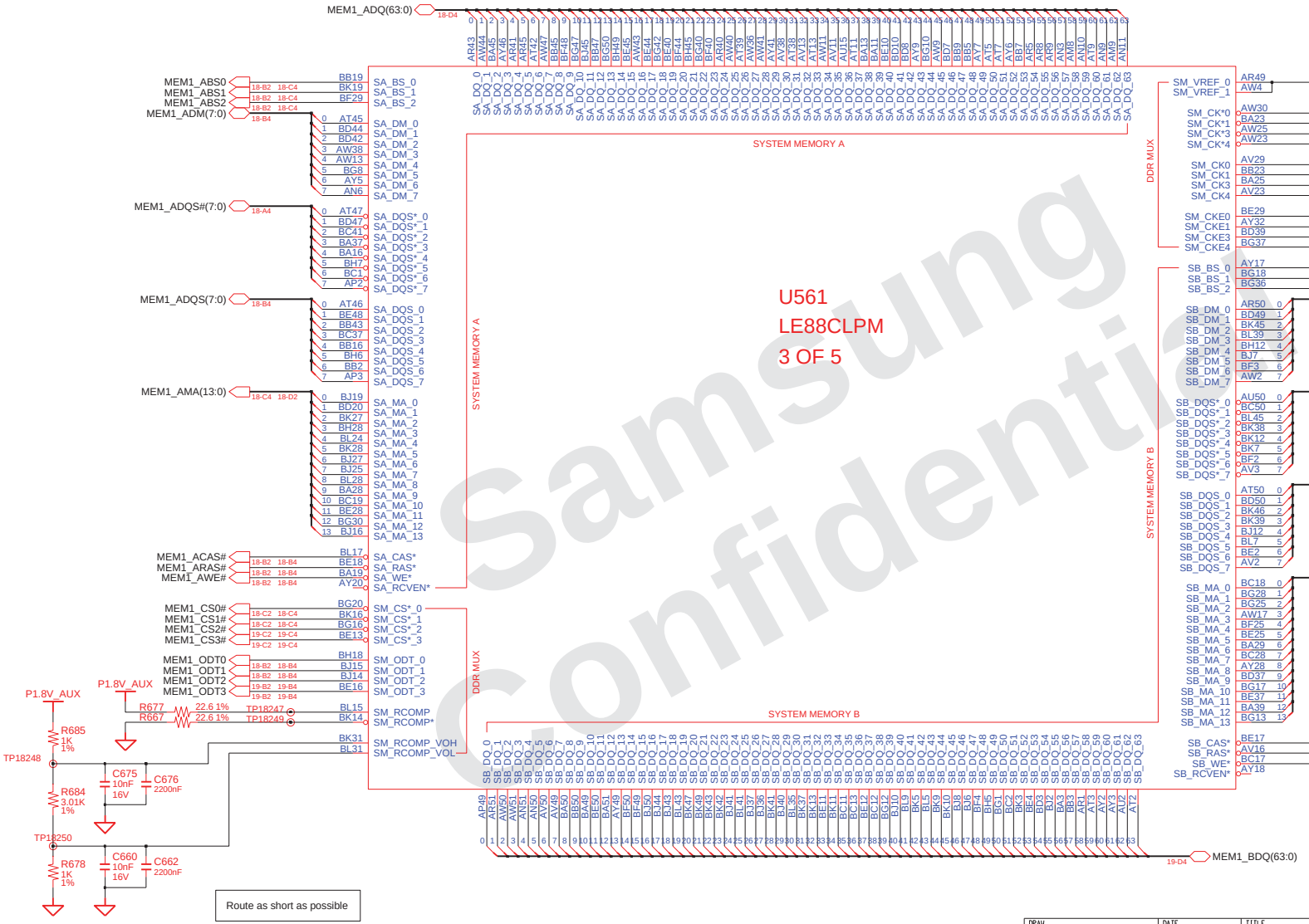

Samsung Confidential

http://hobi-elektronika.net

DRAW YZ KIM	DATE 2/8/2007	TITLE SYDNEY GMCH CRESTLINE (3/5)	SAMSUNG ELECTRONICS
CHECK SW PARK	DEV. STEP PR		PART NO. BA41-0071#A
APPROVAL BJ LEE	REV 1.0		
MODULE CODE	LAST EDIT February 8, 2007 10:00:08 PM		PAGE 15 OF 74

SAMSUNG PROPRIETARY

THIS DOCUMENT CONTAINS CONFIDENTIAL PROPRIETARY INFORMATION THAT IS SAMSUNG ELECTRONICS CO'S PROPERTY. DO NOT DISCLOSE TO OR DUPLICATE FOR OTHERS EXCEPT AS AUTHORIZED BY SAMSUNG.

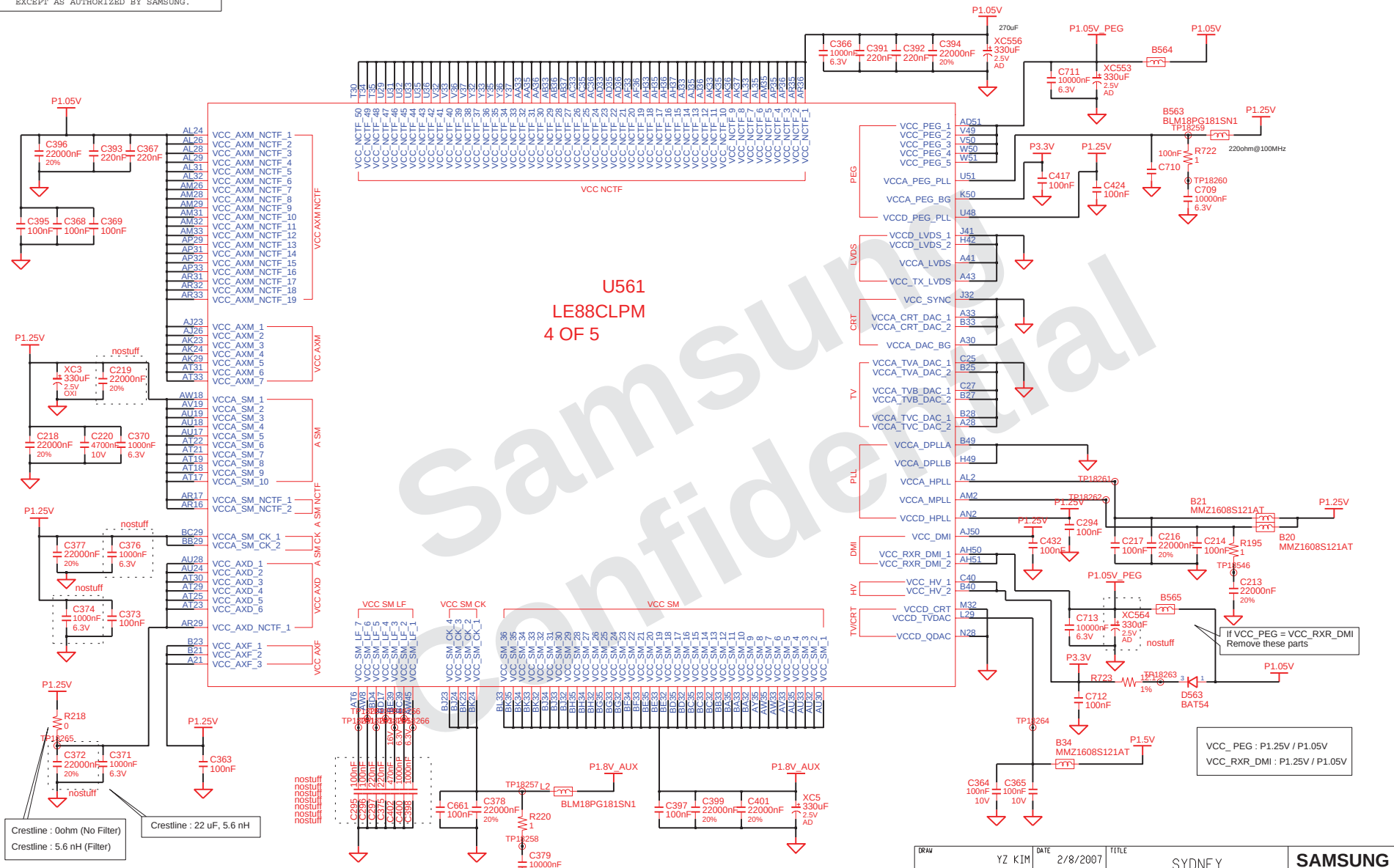

Samsung Confidential

http://hobi-elektronika.net

DRAW	YZ KIM	DATE	2/8/2007	TITLE	SYDNEY GMCH CRESTLINE (4/5)
CHECK	SW PARK	DEV. STEP	PR		SAMSUNG ELECTRONICS
APPROVAL	BJ LEE	REV	1.0		PART NO. BA41-0071#A
MODULE CODE		LAST EDIT	February 8, 2007 10:00:08 PM		PAGE 16 OF 74

SAMSUNG PROPRIETARY
THIS DOCUMENT CONTAINS CONFIDENTIAL PROPRIETARY INFORMATION THAT IS SAMSUNG ELECTRONICS CO'S PROPERTY. DO NOT DISCLOSE TO OR DUPLICATE FOR OTHERS EXCEPT AS AUTHORIZED BY SAMSUNG.

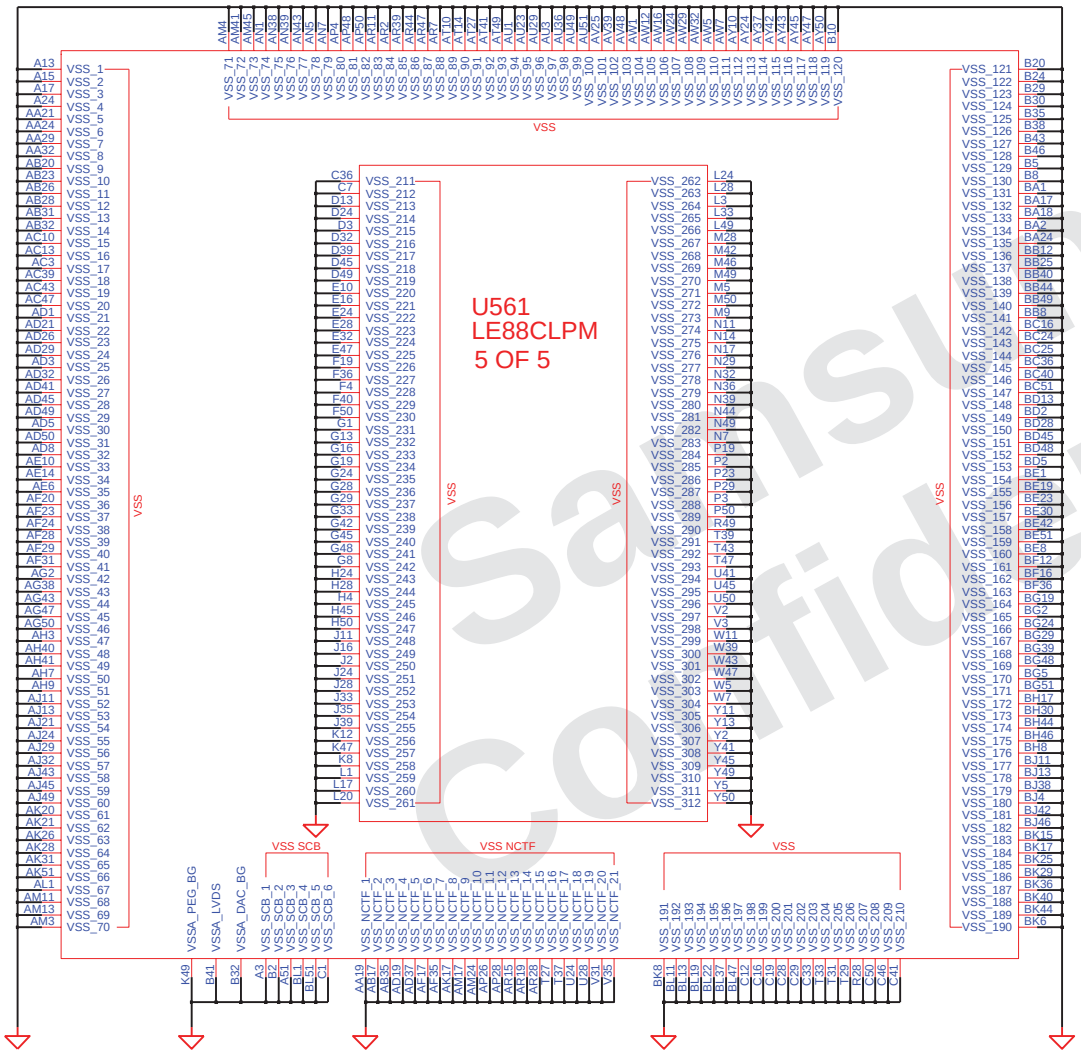

POCAFEB-11 Only (Remove in MP Model)

Current Setting (def. : default Option)		
CFG#	Low	High
CFG(5)	DMIx2	**DMIx4 (def.)**
CFG(6)	Reserved	**DDR-II (def.)**
CFG(7)	DT/Transportable	**Mobile CPU (def.)**
CFG(9)	PEG Reversal	**Normal**
CFG(16)	Dynamic ODT Disabled	**Dynamic ODT Enabled (def.)**
CFG(18)	**VCC 1.05V (def.)**	VCC 1.5V
CFG(19)	**DMI Lane Normal**	DMI Lane Reversal
CFG(20)	**SDVO or PCIE X1 Only(def.)**	SDVO and PCIE X1 Simultaneously

Samsung Confidential

http://hobi-elektronika.net

DRAW YZ KIM	DATE 2/8/2007	TITLE SYDNEY GMCH CRESTLINE (5/5)	SAMSUNG ELECTRONICS
CHECK SW PARK	DEV. STEP PR		PART NO. BA41-0071#A
APPROVAL BJ LEE	REV 1.0		
MODULE CODE	LAST EDIT February 8, 2007 10:00:08 PM		PAGE 17 OF 74

SAMSUNG PROPRIETARY
THIS DOCUMENT CONTAINS CONFIDENTIAL PROPRIETARY INFORMATION THAT IS SAMSUNG ELECTRONICS CO'S PROPERTY. DO NOT DISCLOSE TO OR DUPLICATE FOR OTHERS EXCEPT AS AUTHORIZED BY SAMSUNG.

DDR SO-DIMM #0

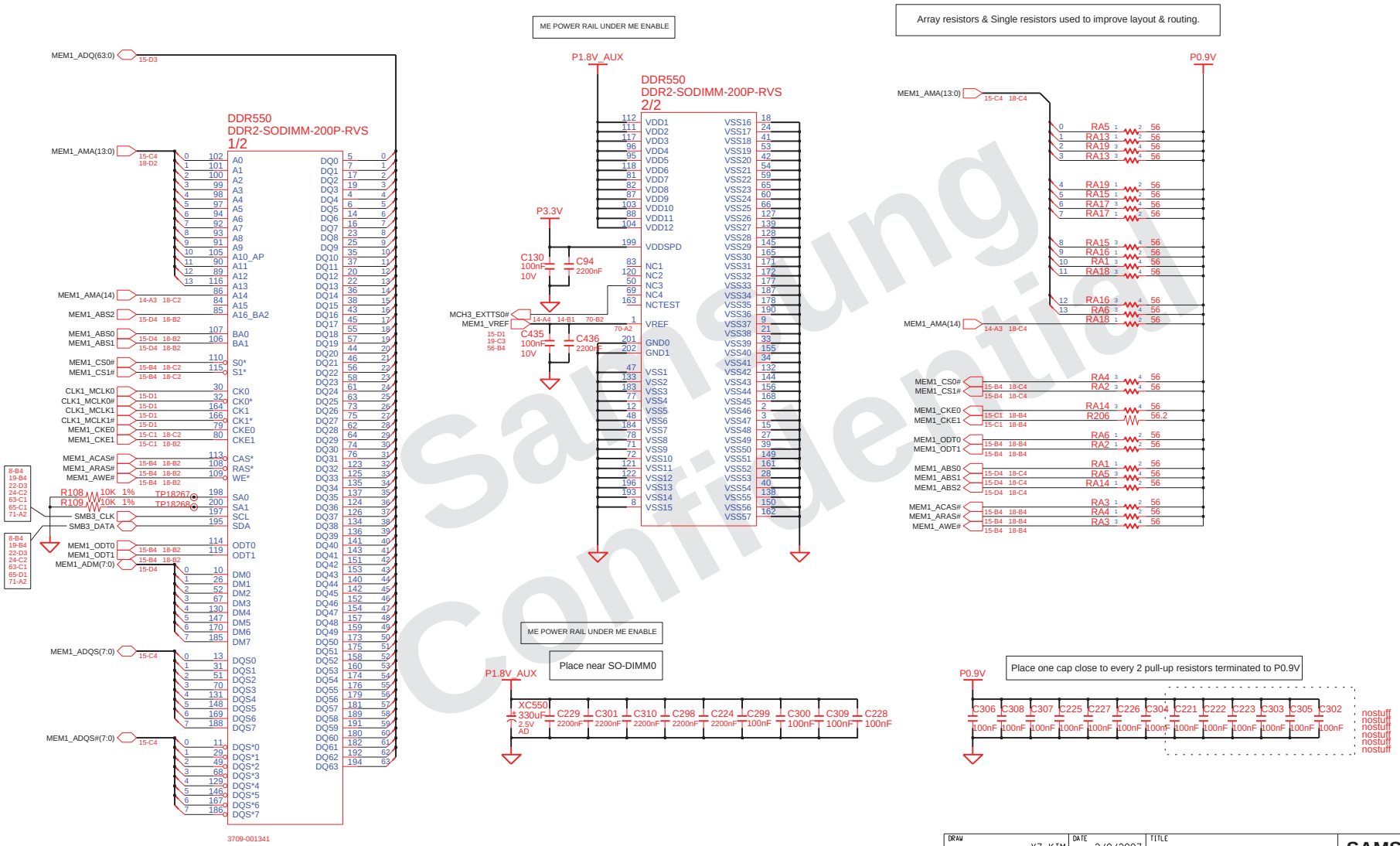

Samsung Confidential

http://hobi-elektronika.net

DRAW: YZ KIM	DATE: 2/8/2007	TITLE: SYDNEY SODIMM DDR II CH A	SAMSUNG ELECTRONICS
CHECK: SW PARK	DEV. STEP: PR		PART NO. BA41-0071#A
APPROVAL: BJ LEE	REV: 1.0		
MODULE CODE	LAST EDIT: February 8, 2007 10:00:08 PM		PAGE 18 OF 74

SAMSUNG PROPRIETARY
THIS DOCUMENT CONTAINS CONFIDENTIAL PROPRIETARY INFORMATION THAT IS SAMSUNG ELECTRONICS CO'S PROPERTY. DO NOT DISCLOSE TO OR DUPLICATE FOR OTHERS EXCEPT AS AUTHORIZED BY SAMSUNG.

DDR SO-DIMM #1

Array resistors & Single resistors used to improve layout & routing.

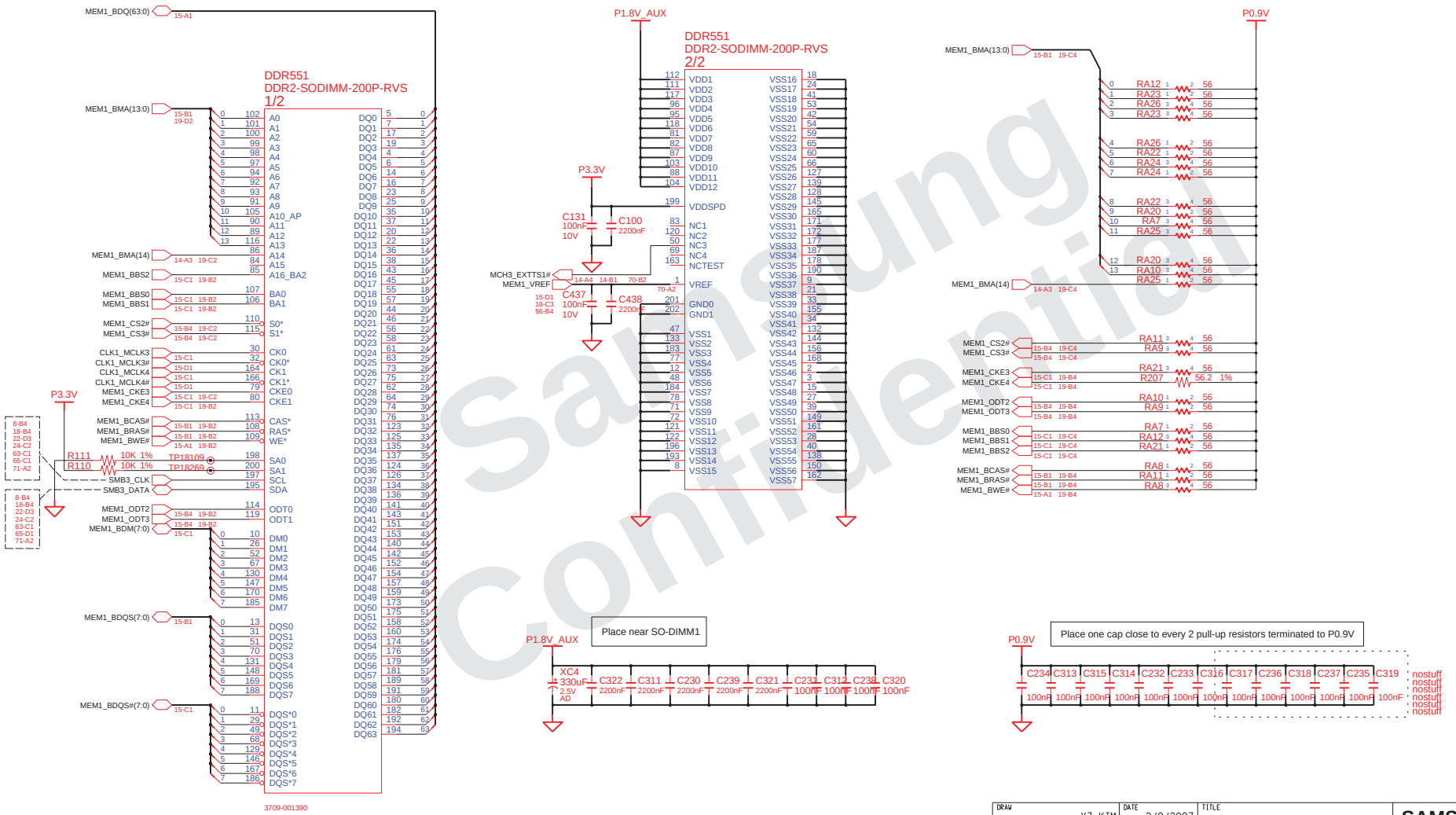

Samsung Confidential

http://hobi-elektronika.net

DRAW: YZ KIM	DATE: 2/8/2007	TITLE: SYDNEY SODIMM DDR II CH B	SAMSUNG ELECTRONICS
CHECK: SW PARK	DEV. STEP: PR		
APPROVAL: BJ LEE	REV: 1.0		PART NO. BA41-0071#A
MODULE CODE	LAST EDIT: February 8, 2007 10:00:08 PM		PAGE 19 OF 74

SAMSUNG PROPRIETARY
THIS DOCUMENT CONTAINS CONFIDENTIAL
PROPRIETARY INFORMATION THAT IS
SAMSUNG ELECTRONICS CO'S PROPERTY.
DO NOT DISCLOSE TO OR DUPLICATE FOR OTHERS
EXCEPT AS AUTHORIZED BY SAMSUNG.

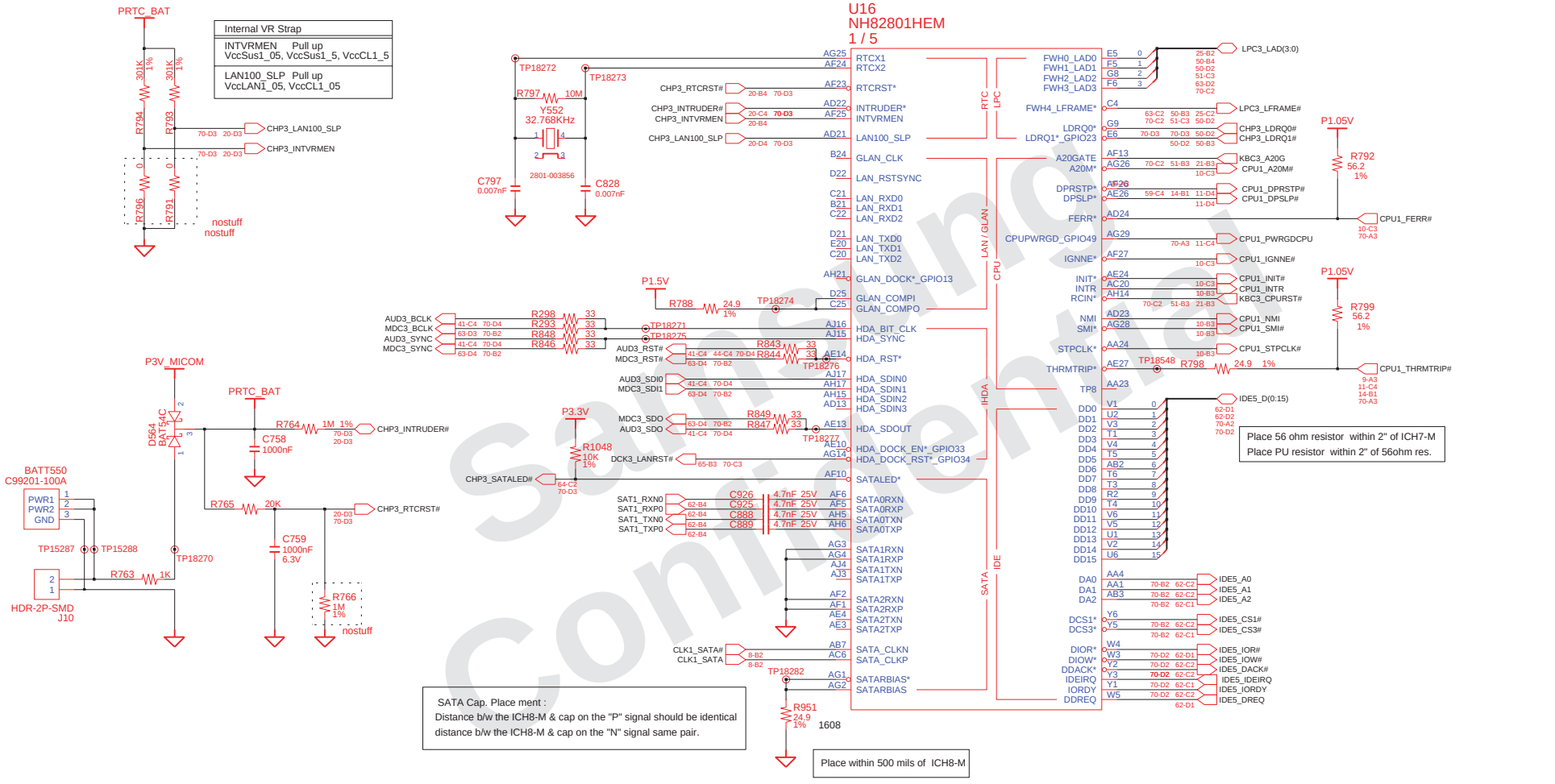

DRAW YZ KIM	DATE 2/8/2007	TITLE SYDNEY ICH8-M ICH8-M (1/5)	SAMSUNG ELECTRONICS
CHECK SW PARK	DEV. STEP PR		PART NO. BA41-0071#A
APPROVAL BJ LEE	REV 1.0		
MODULE CODE	LAST EDIT February 8, 2007 10:00:08 PM		PAGE 20 OF 74

http://hobi-elektronika.net

SAMSUNG PROPRIETARY
THIS DOCUMENT CONTAINS CONFIDENTIAL PROPRIETARY INFORMATION THAT IS SAMSUNG ELECTRONICS CO'S PROPERTY. DO NOT DISCLOSE TO OR DUPLICATE FOR OTHERS EXCEPT AS AUTHORIZED BY SAMSUNG.

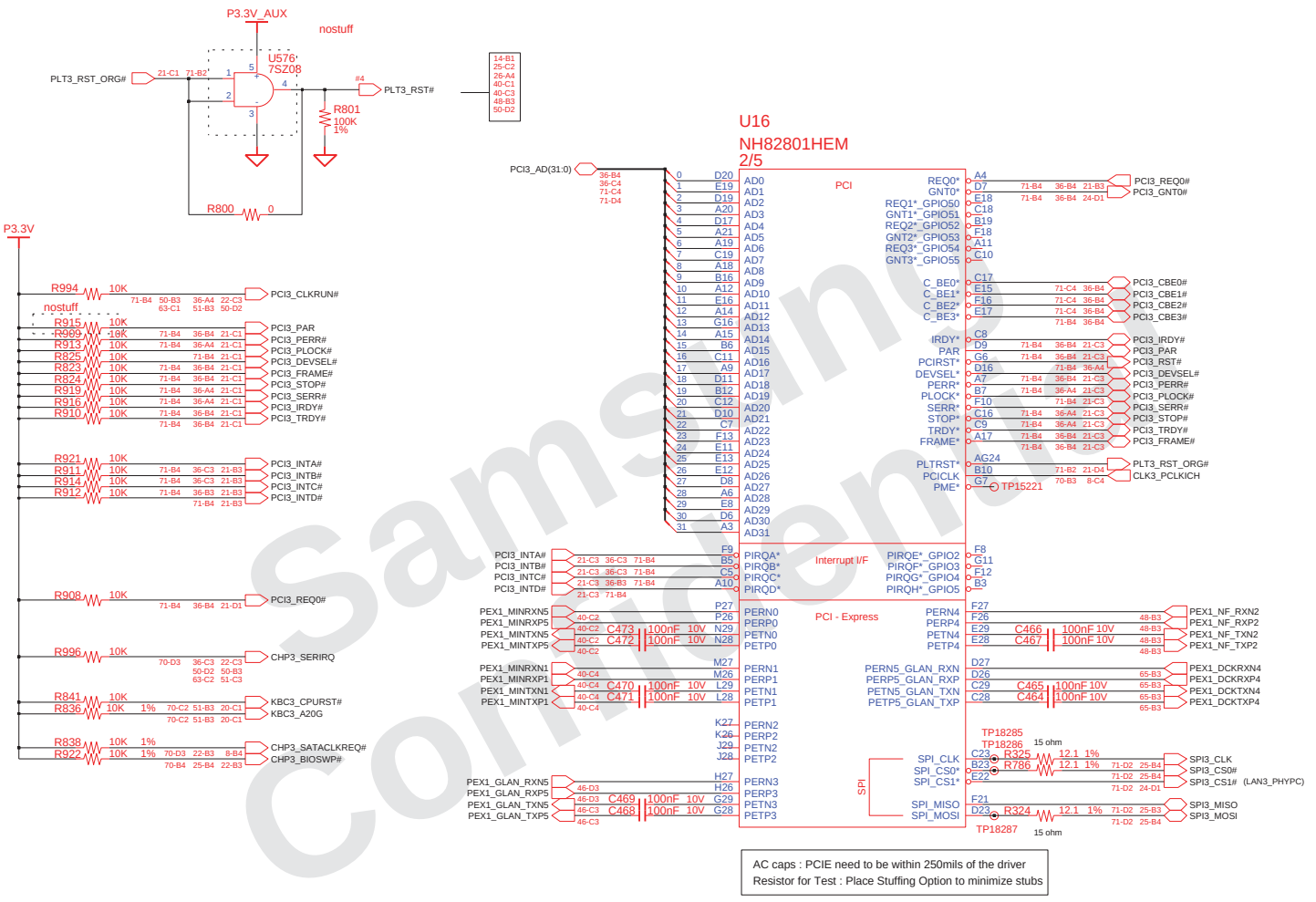

AC caps : PCIE need to be within 250mils of the driver
Resistor for Test : Place Stuffing Option to minimize stubs

Samsung Confidential

http://hobi-elektronika.net

DRAW: YZ KIM	DATE: 2/8/2007	TITLE: SYDNEY ICH8-M ICH8-M(2/5)	SAMSUNG ELECTRONICS
CHECK: SW PARK	DEV. STEP: PR		PART NO. BA41-0071#A
APPROVAL: BJ LEE	REV: 1.0		
MODULE CODE: undefined	LAST EDIT: February 8, 2007 10:00:08 PM		PAGE 21 OF 74

SAMSUNG PROPRIETARY
THIS DOCUMENT CONTAINS CONFIDENTIAL PROPRIETARY INFORMATION THAT IS SAMSUNG ELECTRONICS CO'S PROPERTY. DO NOT DISCLOSE TO OR DUPLICATE FOR OTHERS EXCEPT AS AUTHORIZED BY SAMSUNG.

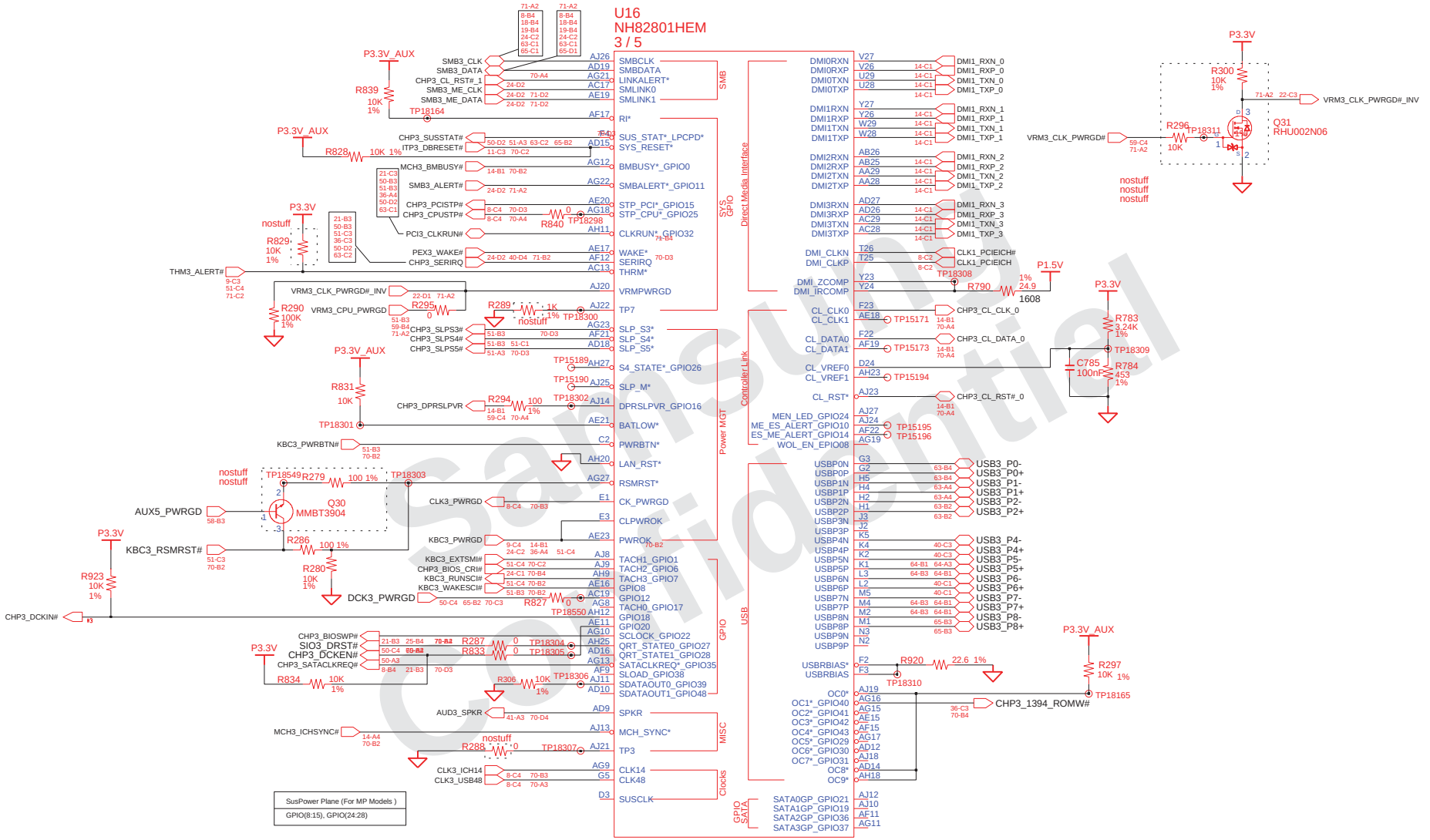

Samsung Confidential

http://hobi-elektronika.net

DRAW: YZ KIM	DATE: 2/8/2007	TITLE: SYDNEY ICH8-M ICH8-M (3/5)	SAMSUNG ELECTRONICS
CHECK: SW PARK	DEV. STEP: PR		PART NO. BA41-0071#A
APPROVAL: BJ LEE	REV: 1.0		
MODULE CODE	LAST EDIT: February 8, 2007 10:00:08 PM	PAGE 22 OF 74	

SAMSUNG PROPRIETARY
THIS DOCUMENT CONTAINS CONFIDENTIAL PROPRIETARY INFORMATION THAT IS SAMSUNG ELECTRONICS CO'S PROPERTY. DO NOT DISCLOSE TO OR DUPLICATE FOR OTHERS EXCEPT AS AUTHORIZED BY SAMSUNG.

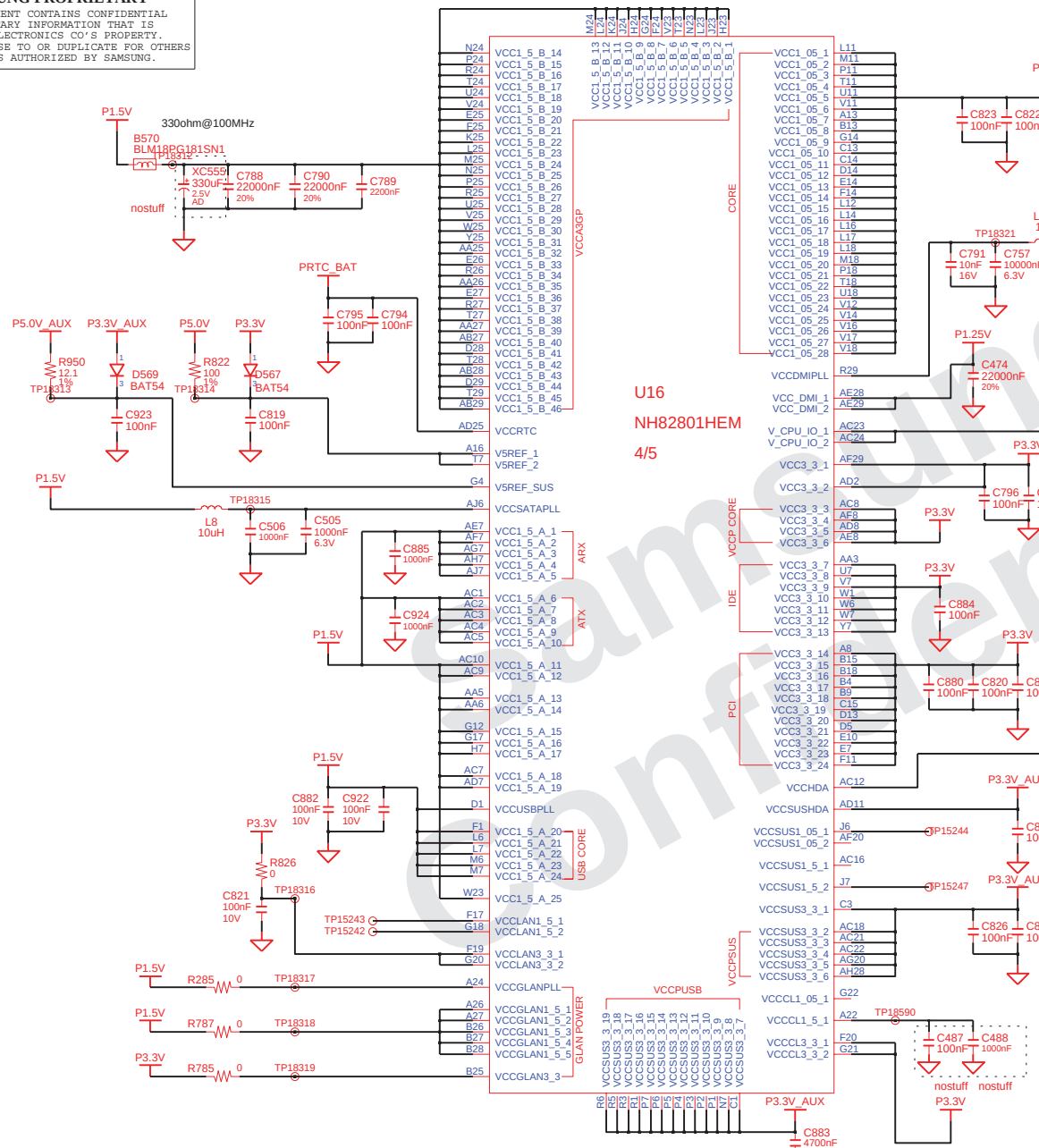

DRAW: YZ KIM	DATE: 2/8/2007	TITLE: SYDNEY ICH8-M ICH8-M (4/5)	SAMSUNG ELECTRONICS
CHECK: SW PARK	DEV. STEP: PR		PART NO. BA41-0071#A
APPROVAL: BJ LEE	REV: 1.0		
MODULE CODE	LAST EDIT: February 8, 2007 10:00:08 PM		PAGE 23 OF 74

SAMSUNG PROPRIETARY
THIS DOCUMENT CONTAINS CONFIDENTIAL PROPRIETARY INFORMATION THAT IS SAMSUNG ELECTRONICS CO'S PROPERTY. DO NOT DISCLOSE TO OR DUPLICATE FOR OTHERS EXCEPT AS AUTHORIZED BY SAMSUNG.

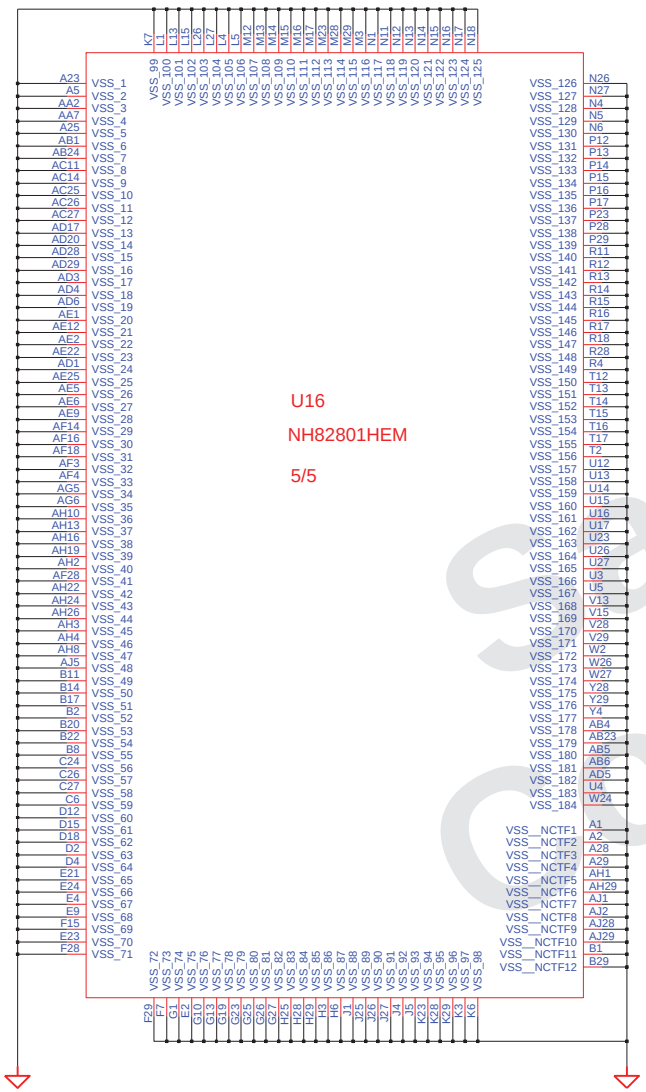

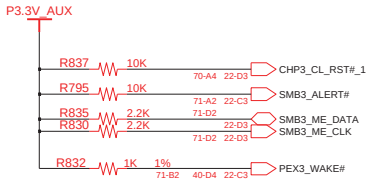

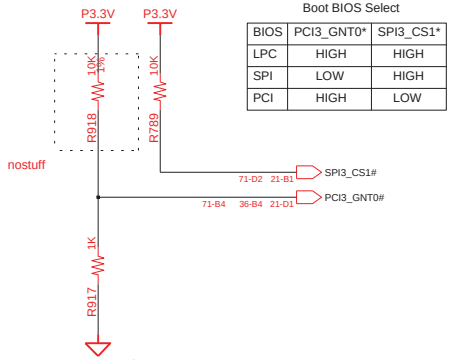

Boot BIOS Select

BIOS	PCI3_GNT0*	SPI3_CS1*
LPC	HIGH	HIGH
SPI	LOW	HIGH
PCI	HIGH	LOW

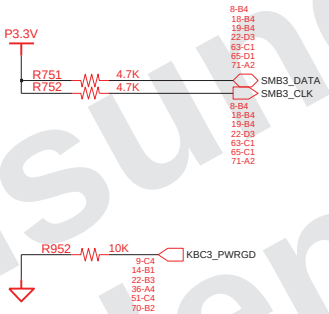

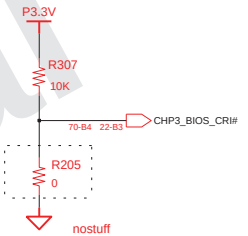

BIOS CRISIS RECOVER STRAP
PLACE NEAR KEYBOARD

Samsung Confidential

http://hobi-elektronika.net

DRAW YZ KIM	DATE 2/8/2007	TITLE SYDNEY ICH8-M ICH8-M (5/5)	SAMSUNG ELECTRONICS
CHECK SW PARK	DEV. STEP PR		PART NO. BA41-0071#A
APPROVAL BJ LEE	REV 1.0		
MODULE CODE	LAST EDIT February 8, 2007 10:00:08 PM		PAGE 24 OF 74

SAMSUNG PROPRIETARY
THIS DOCUMENT CONTAINS CONFIDENTIAL
PROPRIETARY INFORMATION THAT IS
SAMSUNG ELECTRONICS CO'S PROPERTY.
DO NOT DISCLOSE TO OR DUPLICATE FOR OTHERS
EXCEPT AS AUTHORIZED BY SAMSUNG.

SPI ROM

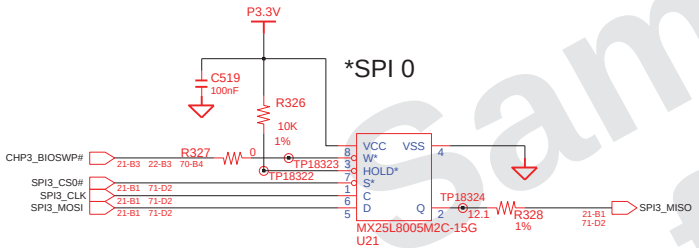

80H DECODER CONNECTOR

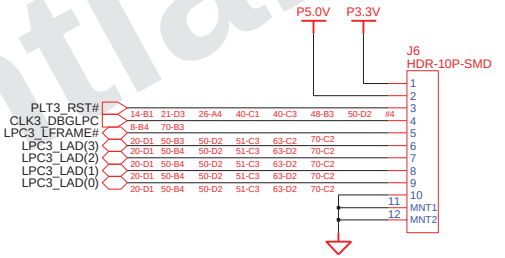

Samsung Confidential

http://hobi-elektronika.net

DRAW YZ KIM	DATE 2/8/2007	TITLE SYDNEY ICH8-M ICH8-M STRAP	SAMSUNG ELECTRONICS
CHECK SW PARK	DEV. STEP PR		PART NO. BA41-0071#A
APPROVAL BJ LEE	REV 1.0		
MODULE CODE undefined	LAST EDIT February 8, 2007 10:00:08 PM		PAGE 25 OF 74

SAMSUNG PROPRIETARY
THIS DOCUMENT CONTAINS CONFIDENTIAL PROPRIETARY INFORMATION THAT IS SAMSUNG ELECTRONICS CO'S PROPERTY. DO NOT DISCLOSE TO OR DUPLICATE FOR OTHERS EXCEPT AS AUTHORIZED BY SAMSUNG.

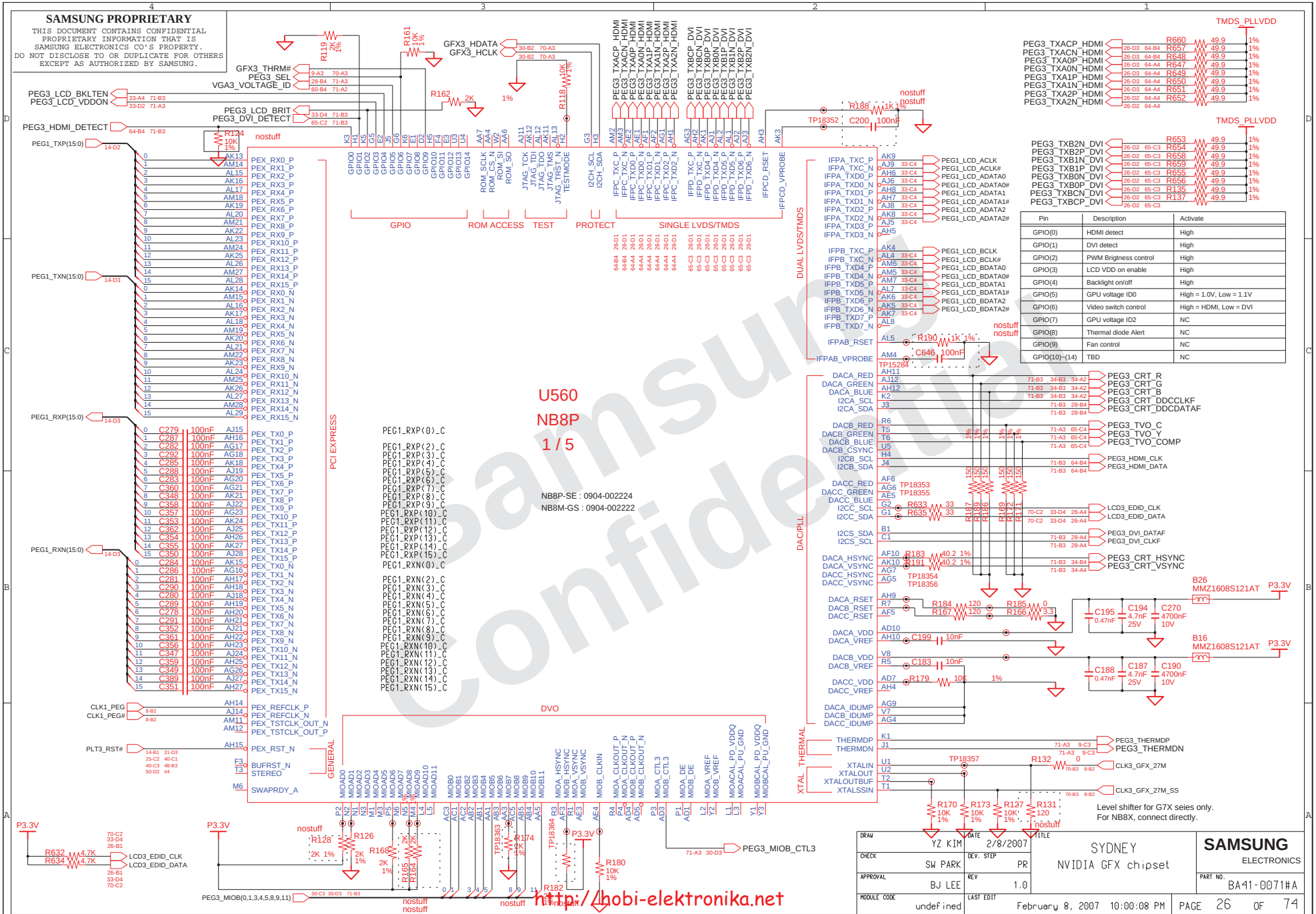

Pin	Description	Activate
GPIO(0)	HDMI detect	High
GPIO(1)	DVI detect	High
GPIO(2)	PWM Brigtness control	High
GPIO(3)	LCD VDD on enable	High
GPIO(4)	Backlight on/off	High
GPIO(5)	GPU voltage ID0	High = 1.0V, Low = 1.1V
GPIO(6)	Video switch control	High = HDMI, Low = DVI
GPIO(7)	GPU voltage ID2	NC
GPIO(8)	Thermal diode Alert	NC
GPIO(9)	Fan control	NC
GPIO(10)~(14)	TBD	NC

DRAW	YZ KIM	DATE	2/8/2007
CHECK	SW PARK	DEV. STEP	PR
APPROVAL	BJ LEE	REV	1.0
MODULE CODE	undefined	LAST EDIT	February 8, 2007 10:00:08 PM

TITLE: SYDNEY NVIDIA GFX chipset

SAMSUNG ELECTRONICS

PART NO. BA41-0071#A

PAGE 26 OF 74

Samsung Confidential

http://hobi-elektronika.net

SAMSUNG PROPRIETARY
THIS DOCUMENT CONTAINS CONFIDENTIAL PROPRIETARY INFORMATION THAT IS SAMSUNG ELECTRONICS CO'S PROPERTY. DO NOT DISCLOSE TO OR DUPLICATE FOR OTHERS EXCEPT AS AUTHORIZED BY SAMSUNG.

Graphic Memory I/F (Using FBA Channel)

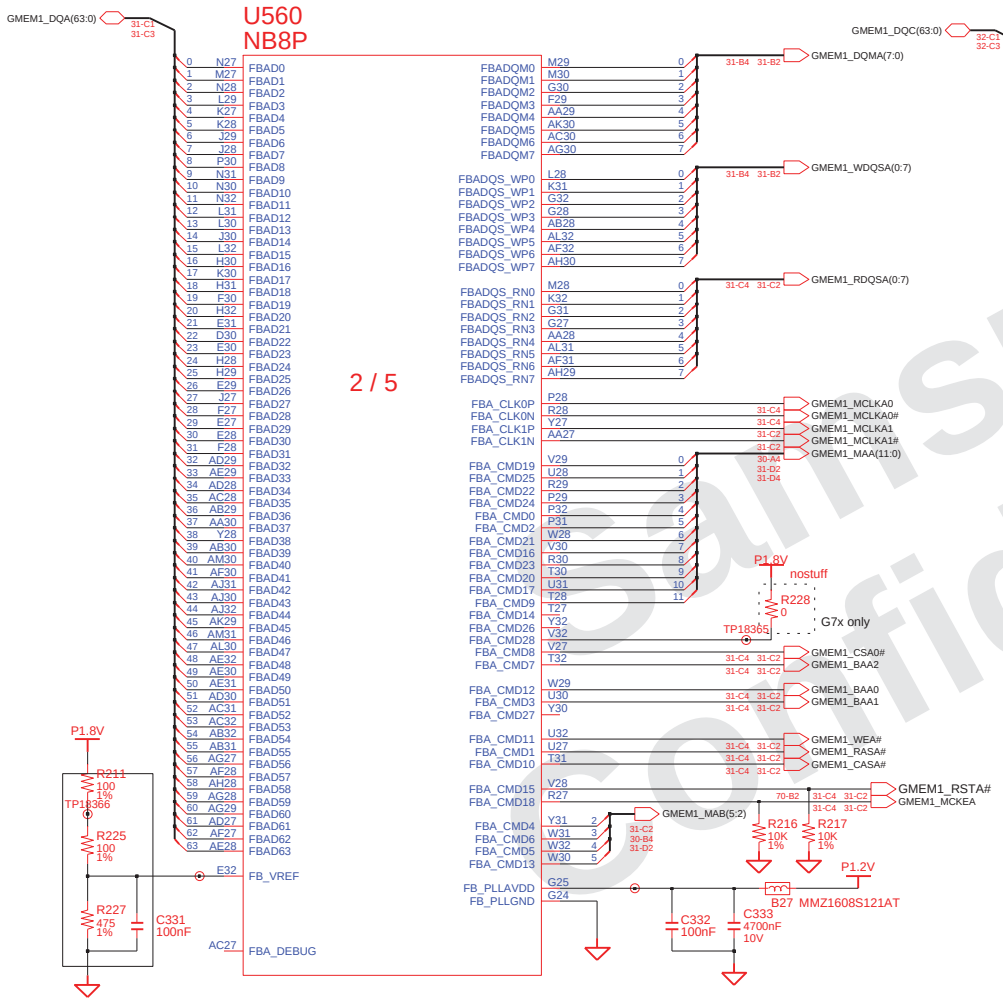

Use for G72M, don't need for G73M

Graphic Memory I/F (Using FBC Channel)

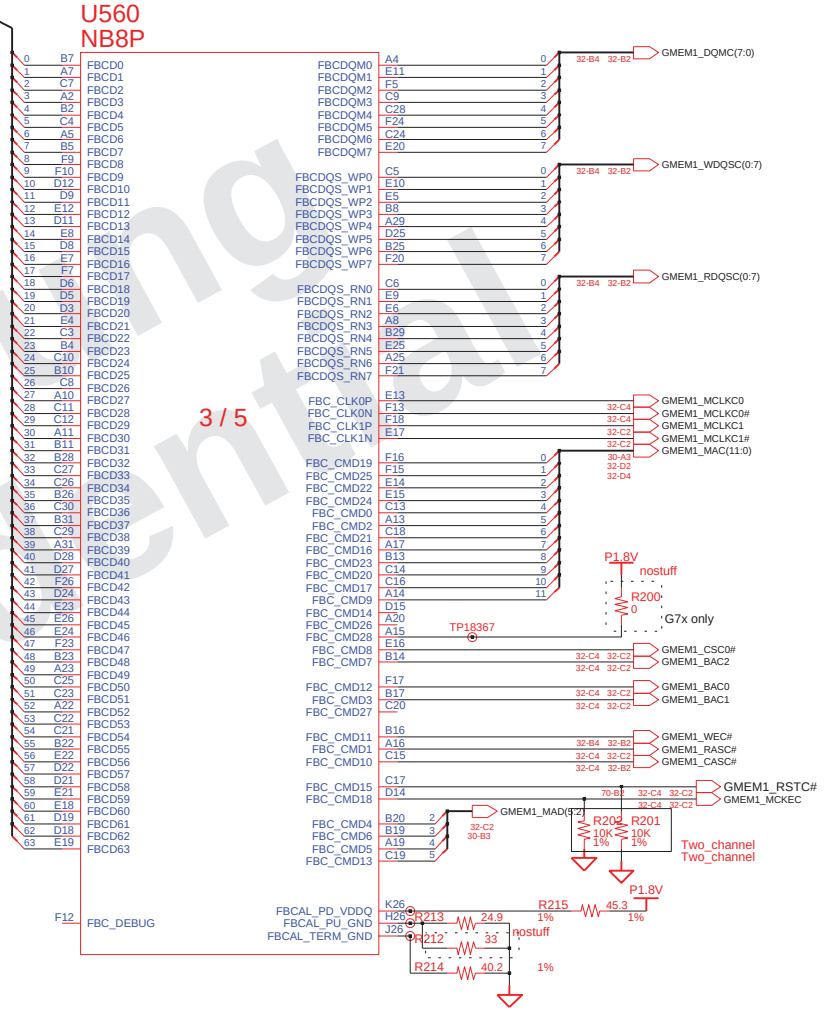

Samsung Confidential

http://hobi-elektronika.net

DRAW YZ KIM	DATE 2/8/2007	TITLE SYDNEY NVIDIA GFX chipset	SAMSUNG ELECTRONICS
CHECK SW PARK	DEV. STEP PR		PART NO. BA41-0071#A
APPROVAL BJ LEE	REV 1.0		
MODULE CODE undefined	LAST EDIT February 8, 2007 10:00:08 PM	PAGE 27 OF 74	

SAMSUNG PROPRIETARY
THIS DOCUMENT CONTAINS CONFIDENTIAL PROPRIETARY INFORMATION THAT IS SAMSUNG ELECTRONICS CO'S PROPERTY. DO NOT DISCLOSE TO OR DUPLICATE FOR OTHERS EXCEPT AS AUTHORIZED BY SAMSUNG.

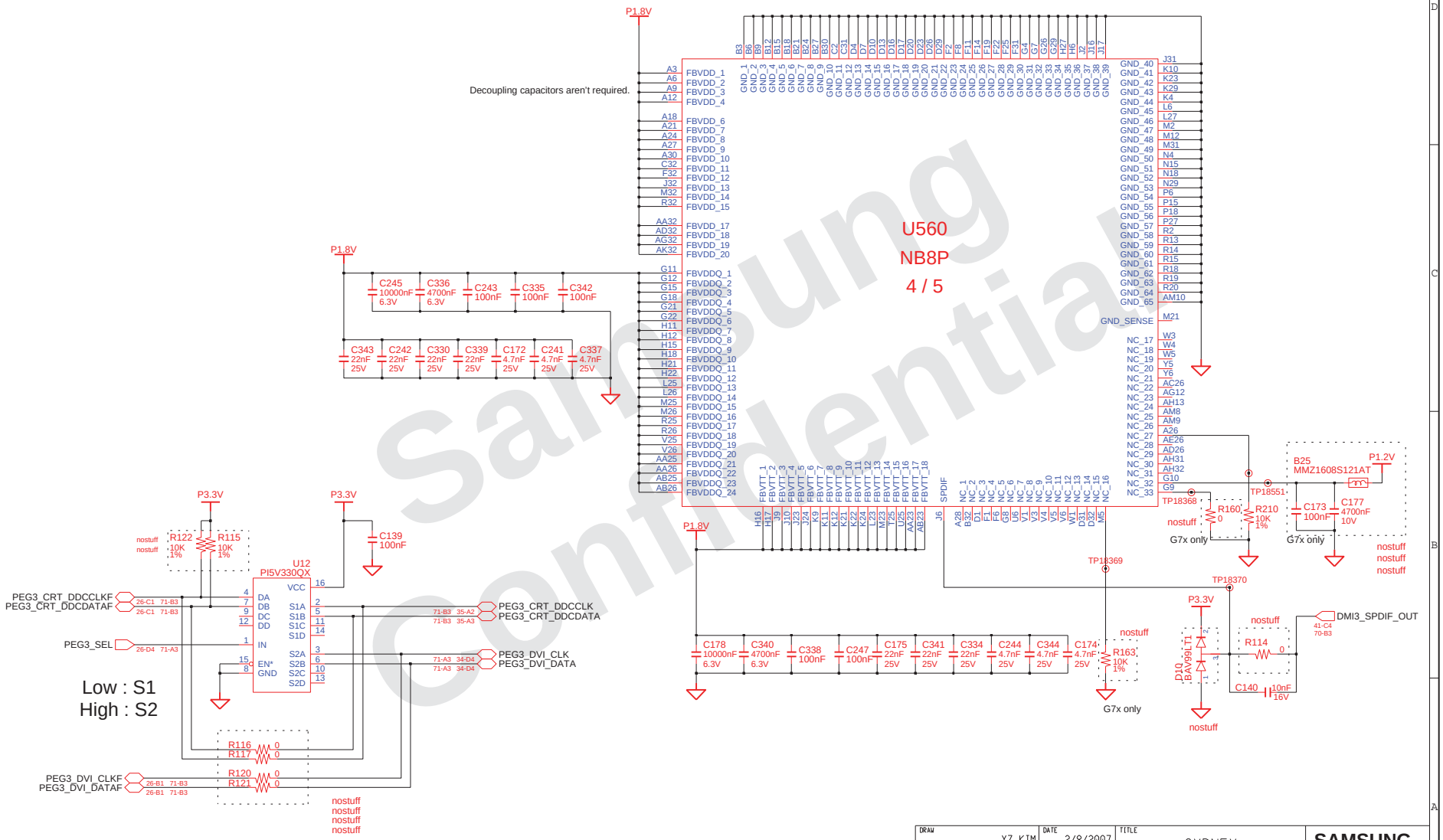

DRAW YZ KIM	DATE 2/8/2007	TITLE SYDNEY NVIDIA GFX chipset	SAMSUNG ELECTRONICS
CHECK SW PARK	DEV. STEP PR		PART NO. BA41-0071#A
APPROVAL BJ LEE	REV 1.0		
MODULE CODE undefined	LAST EDIT February 8, 2007 10:00:08 PM		PAGE 28 OF 74

http://hobi-elektronika.net

SAMSUNG PROPRIETARY
THIS DOCUMENT CONTAINS CONFIDENTIAL PROPRIETARY INFORMATION THAT IS SAMSUNG ELECTRONICS CO'S PROPERTY. DO NOT DISCLOSE TO OR DUPLICATE FOR OTHERS EXCEPT AS AUTHORIZED BY SAMSUNG.

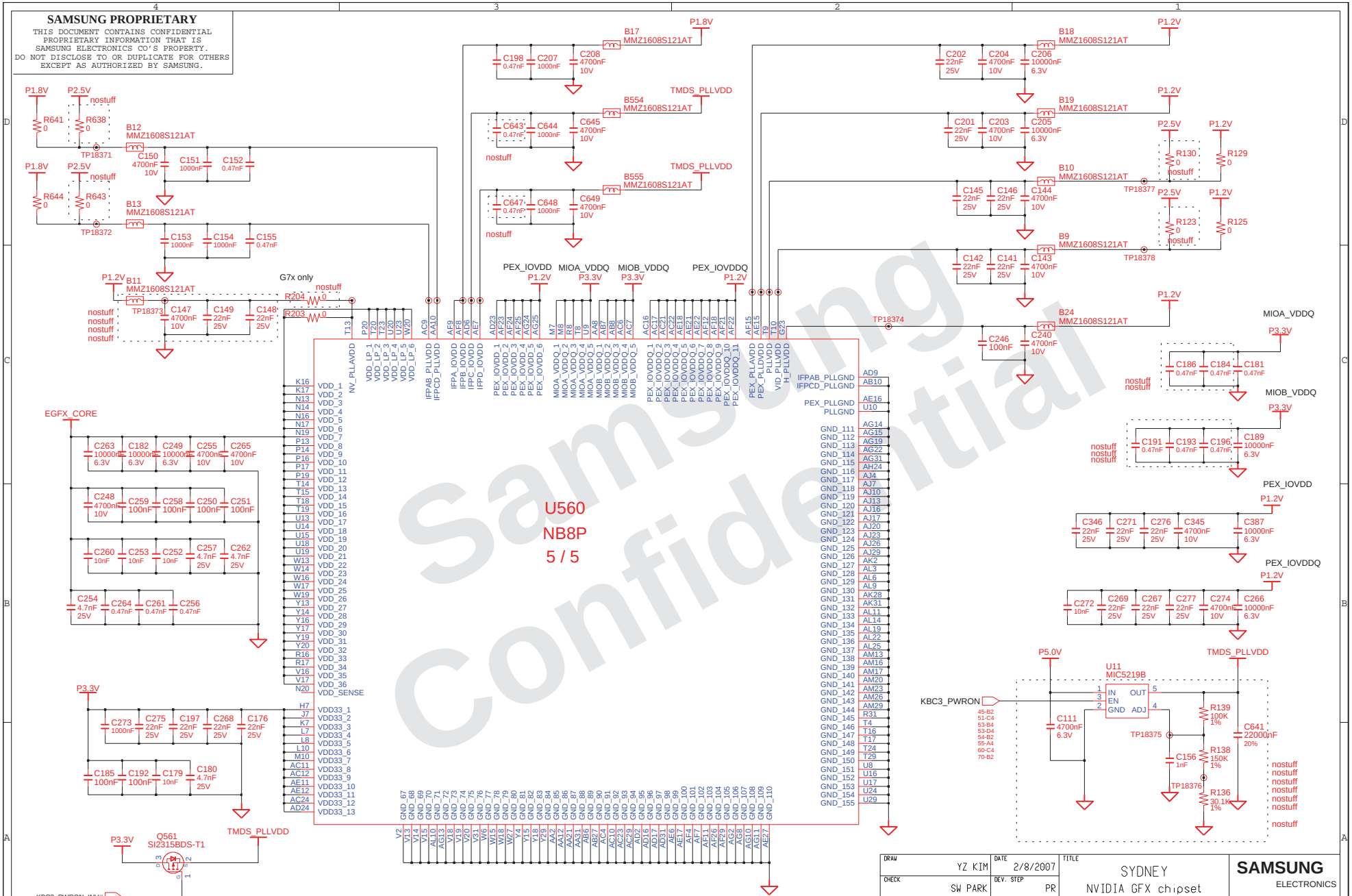

DRAW: YZ KIM	DATE: 2/8/2007	TITLE: SYDNEY NVIDIA GFX chipset	SAMSUNG ELECTRONICS
CHECK: SW PARK	DEV. STEP: PR		
APPROVAL: BJ LEE	REV: 1.0		PART NO. BA41-0071#A
MODULE CODE: undefined	LAST EDIT: February 8, 2007 10:00:08 PM		PAGE 29 OF 74

SAMSUNG PROPRIETARY
THIS DOCUMENT CONTAINS CONFIDENTIAL PROPRIETARY INFORMATION THAT IS SAMSUNG ELECTRONICS CO'S PROPERTY. DO NOT DISCLOSE TO OR DUPLICATE FOR OTHERS EXCEPT AS AUTHORIZED BY SAMSUNG.

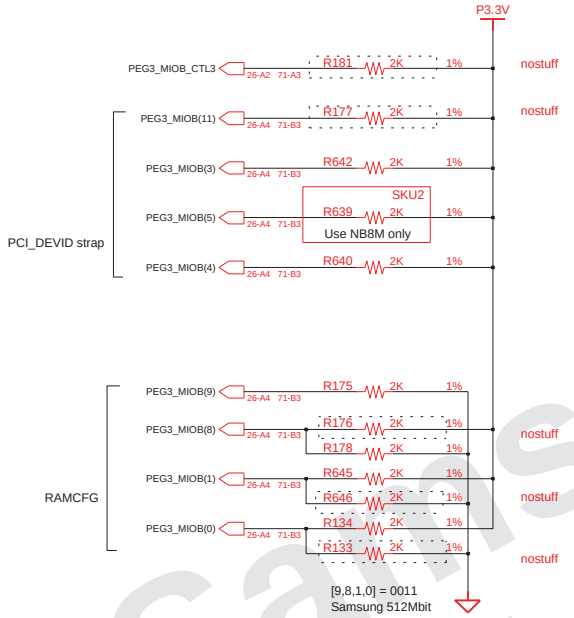

Straps	Pin # (Rev.A02)	Descriptions
SUB_VENDOR	MIOAD(1)	0 : No BIOS 1 : Read from BIOS(Default)
RAMCFG(3:0) [9,8,1,0]	MIOB(9) MIOB(8) MIOB(1) MIOB(0)	0111 : samsung GDDR3 256Mbit 0101 : Qimonda GDDR3 256Mbit 0011 : samsung GDDR3 512Mbit 0001 : Qimonda GDDR3 512Mbit
CRYSTAL(0)	MIOB(2)	0 : 27 MHz (Default) 1 : Reserved
TV_MODE(2:0)	MIOB(6) MIOAD(10) MIOAD(7)	000 : NTSC M 001 : NTSC J (default) 010 : PAL M 011 : PAL N 100 : PAL CN 101 : PAL BDGHI 110 : Reserved 111 : Reserved
PCI_DEVID(4:0)	CTL3 MIOB(11) MIOB(3) MIOB(5) MIOB(4)	0111 (0x407) : NB8P-GS 0101 (0x425) : NB8P-SE 0111 (0x427) : NB8M-GS
ROM_TYPE(1:0)	MIOB(10) MIOBVSYNC	No ROM (NC)
USER STRAP	MIOAD(2:5)	EDID

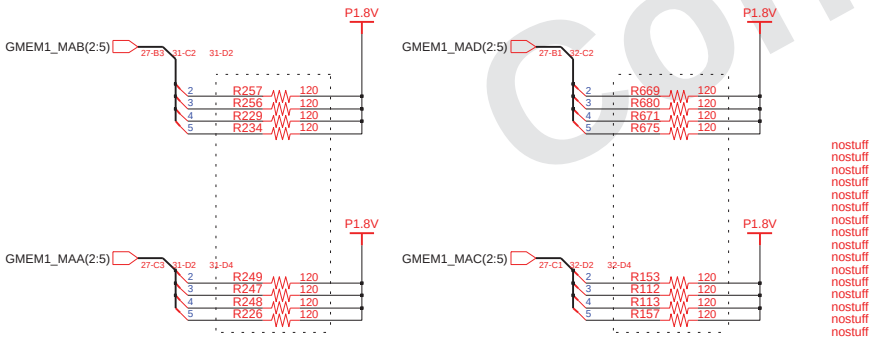

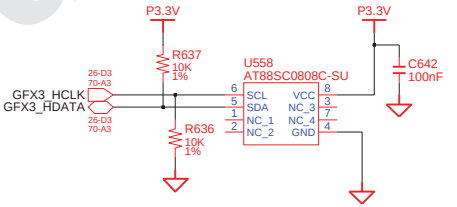

Samsung Confidential

http://hobi-elektronika.net

DRAW YZ KIM	DATE 2/8/2007	TITLE SYDNEY GFX STRAP	SAMSUNG ELECTRONICS
CHECK SW PARK	DEV. STEP PR		PART NO. BA41-0071#A
APPROVAL BJ LEE	REV 1.0		
MODULE CODE undefined	LAST EDIT February 8, 2007 10:00:08 PM	PAGE 30 OF 74	

SAMSUNG PROPRIETARY
THIS DOCUMENT CONTAINS CONFIDENTIAL PROPRIETARY INFORMATION THAT IS SAMSUNG ELECTRONICS CO'S PROPERTY. DO NOT DISCLOSE TO OR DUPLICATE FOR OTHERS EXCEPT AS AUTHORIZED BY SAMSUNG.

A-channel

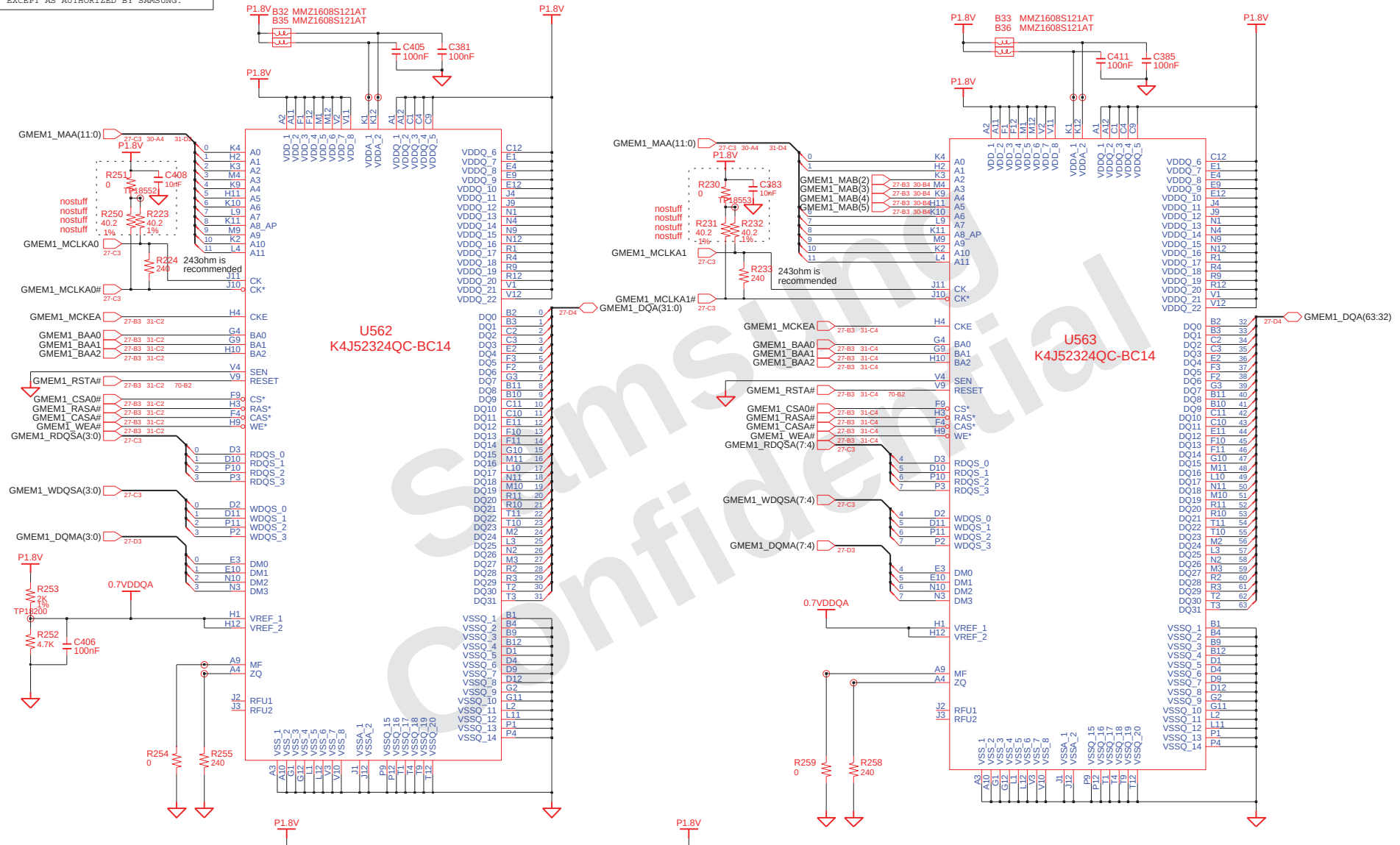

Samsung Confidential

http://hobi-elektronika.net

DRAW: YZ KIM	DATE: 2/8/2007	TITLE: SYDNEY GRAPHIC MEMORY	SAMSUNG ELECTRONICS
CHECK: SW PARK	DEV. STEP: PR		
APPROVAL: BJ LEE	REV: 1.0		PART NO. BA41-0071#A
MODULE CODE	LAST EDIT: February 8, 2007 10:00:08 PM		PAGE 31 OF 74

SAMSUNG PROPRIETARY
THIS DOCUMENT CONTAINS CONFIDENTIAL PROPRIETARY INFORMATION THAT IS SAMSUNG ELECTRONICS CO'S PROPERTY. DO NOT DISCLOSE TO OR DUPLICATE FOR OTHERS EXCEPT AS AUTHORIZED BY SAMSUNG.

This page is for "2channel-model". (only use for SKU1)

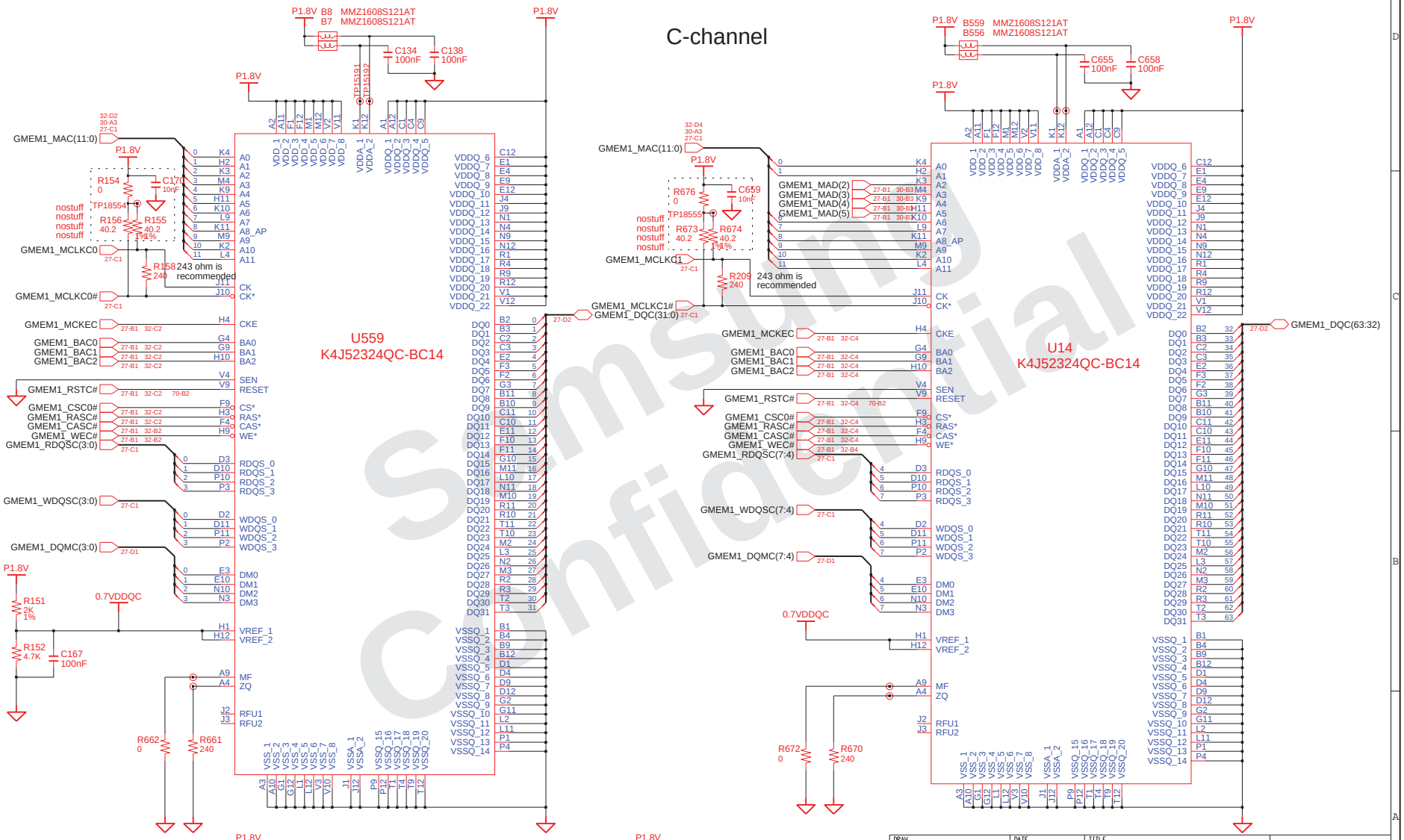

DRAW: YZ KIM	DATE: 2/8/2007	TITLE: SYDNEY GRAPHIC MEMORY	SAMSUNG ELECTRONICS
CHECK: SW PARK	DEV. STEP: PR		PART NO. BA41-0071#A
APPROVAL: BJ LEE	REV: 1.0		
MODULE CODE	LAST EDIT: February 8, 2007 10:00:08 PM		PAGE 32 OF 74

SAMSUNG PROPRIETARY
THIS DOCUMENT CONTAINS CONFIDENTIAL PROPRIETARY INFORMATION THAT IS SAMSUNG ELECTRONICS CO'S PROPERTY. DO NOT DISCLOSE TO OR DUPLICATE FOR OTHERS EXCEPT AS AUTHORIZED BY SAMSUNG.

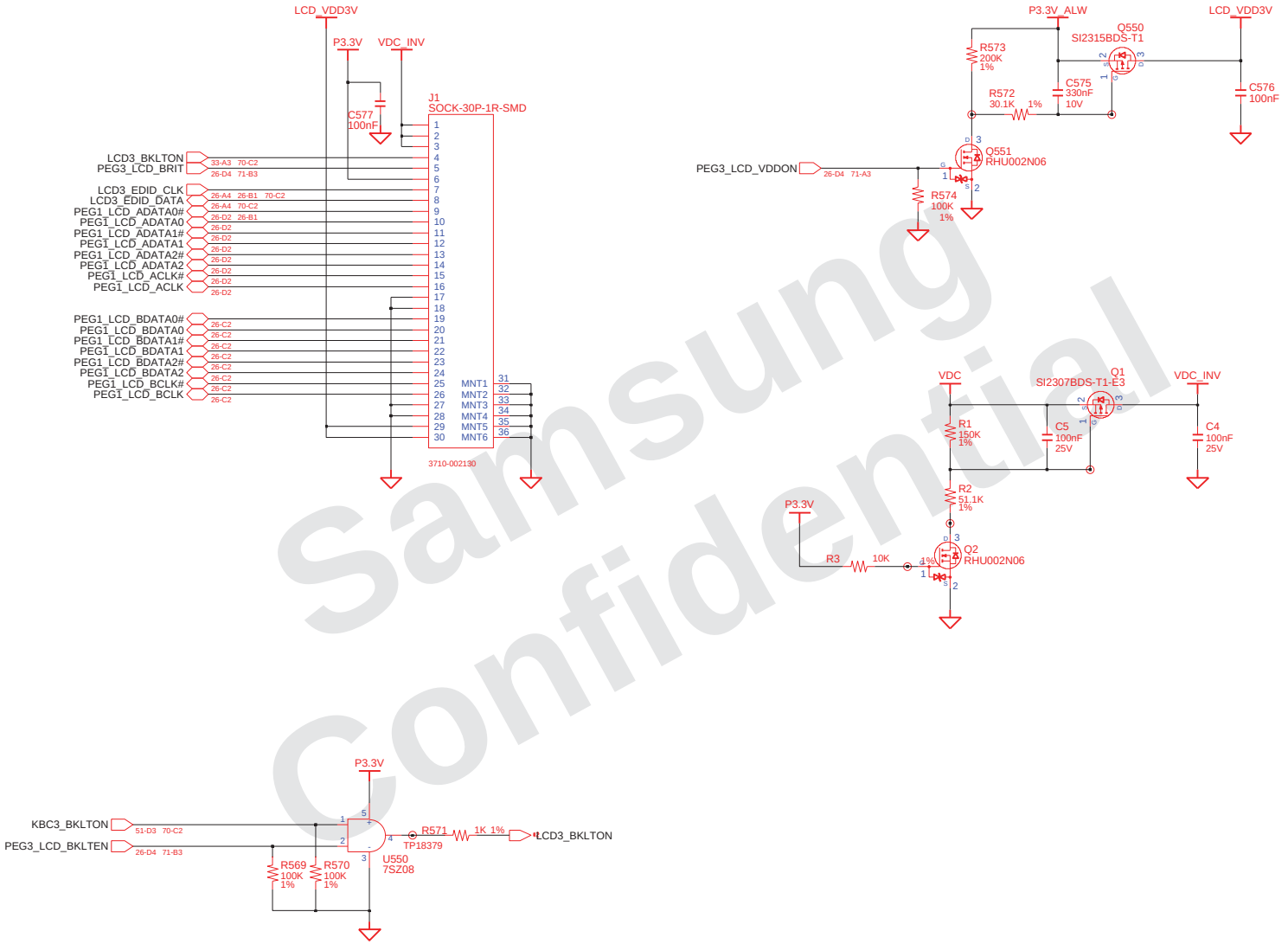

Samsung Confidential

http://hobi-elektronika.net

DRAW: YZ KIM	DATE: 2/8/2007	TITLE: SYDNEY LCD LCD CONN & LCD VDDEN	SAMSUNG ELECTRONICS
CHECK: SW PARK	DEV. STEP: PR		PART NO. BA41-0071#A
APPROVAL: BJ LEE	REV: 1.0		
MODULE CODE	LAST EDIT: February 8, 2007 10:00:08 PM		PAGE 33 OF 74

SAMSUNG PROPRIETARY
THIS DOCUMENT CONTAINS CONFIDENTIAL
PROPRIETARY INFORMATION THAT IS
SAMSUNG ELECTRONICS CO'S PROPERTY.
DO NOT DISCLOSE TO OR DUPLICATE FOR OTHERS
EXCEPT AS AUTHORIZED BY SAMSUNG.

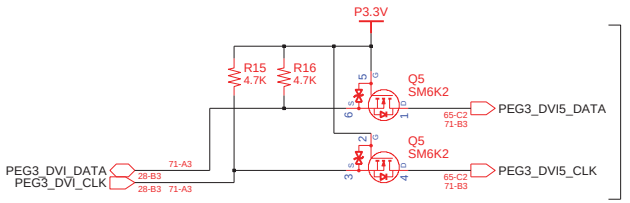

To Docking

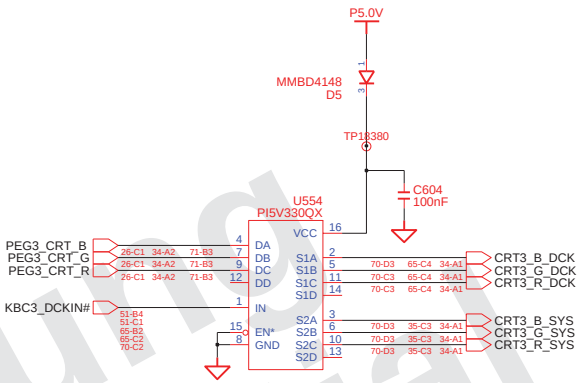

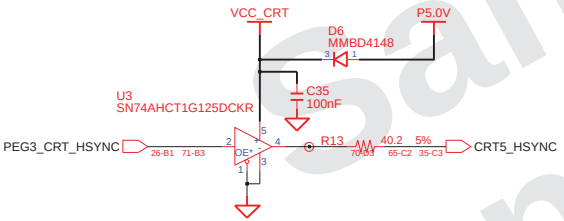

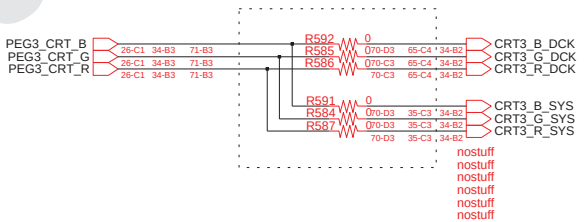

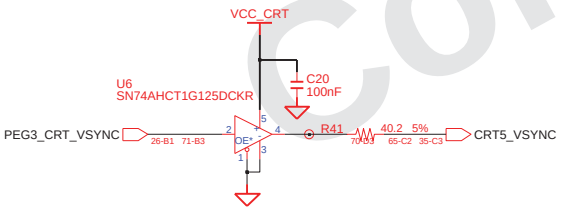

Samsung Confidential

http://hobi-elektronika.net

DRAW YZ KIM	DATE 2/8/2007	TITLE SYDNEY	SAMSUNG ELECTRONICS
CHECK SW PARK	DEV. STEP PR	CRT&TVO BUS SWITCH	PART NO. BA41-0071#A
APPROVAL BJ LEE	REV 1.0		
MODULE CODE	LAST EDIT February 8, 2007 10:00:08 PM	PAGE 34 OF 74	

SAMSUNG PROPRIETARY
THIS DOCUMENT CONTAINS CONFIDENTIAL
PROPRIETARY INFORMATION THAT IS
SAMSUNG ELECTRONICS CO'S PROPERTY.
DO NOT DISCLOSE TO OR DUPLICATE FOR OTHERS
EXCEPT AS AUTHORIZED BY SAMSUNG.

CRT CONNECTOR

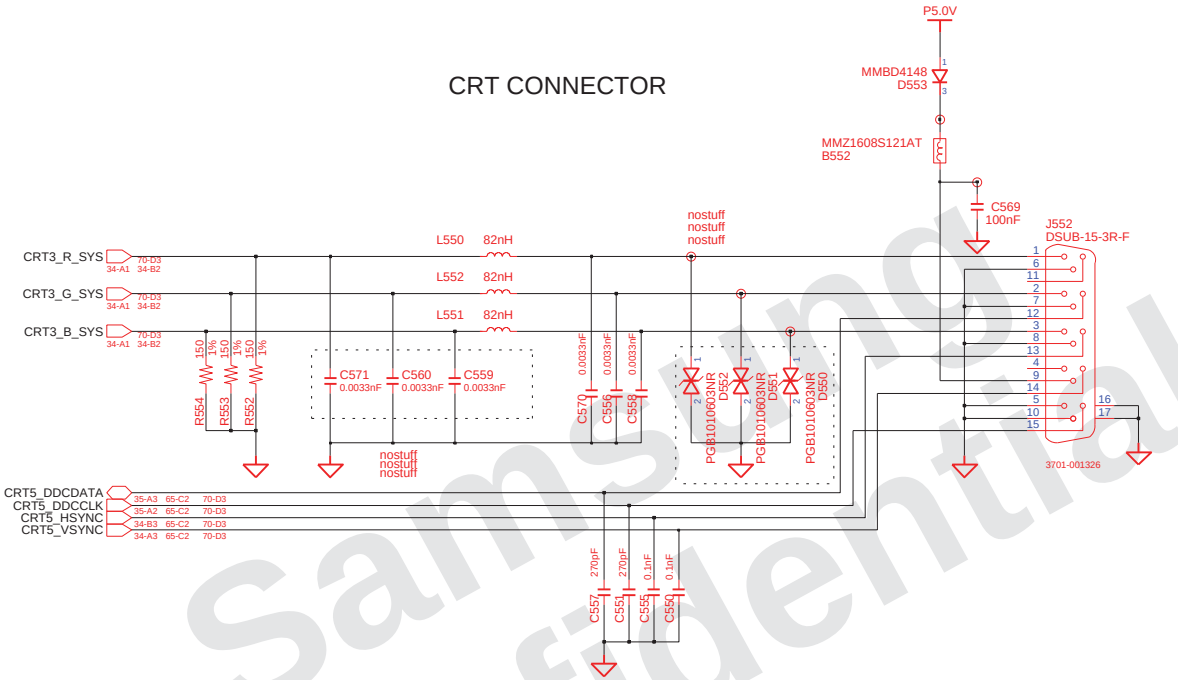

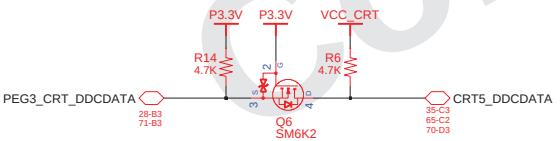

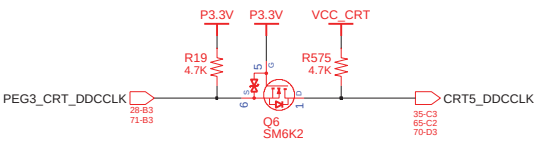

Samsung Confidential

http://hobi-elektronika.net

DRAW YZ KIM	DATE 2/8/2007	TITLE SYDNEY CRT CRT CONNECTOR	SAMSUNG ELECTRONICS
CHECK SW PARK	DEV. STEP PR		PART NO. BA41-0071#A
APPROVAL BJ LEE	REV 1.0		
MODULE CODE	LAST EDIT February 8, 2007 10:00:08 PM		PAGE 35 OF 74

SAMSUNG PROPRIETARY
THIS DOCUMENT CONTAINS CONFIDENTIAL PROPRIETARY INFORMATION THAT IS SAMSUNG ELECTRONICS CO'S PROPERTY. DO NOT DISCLOSE TO OR DUPLICATE FOR OTHERS EXCEPT AS AUTHORIZED BY SAMSUNG.

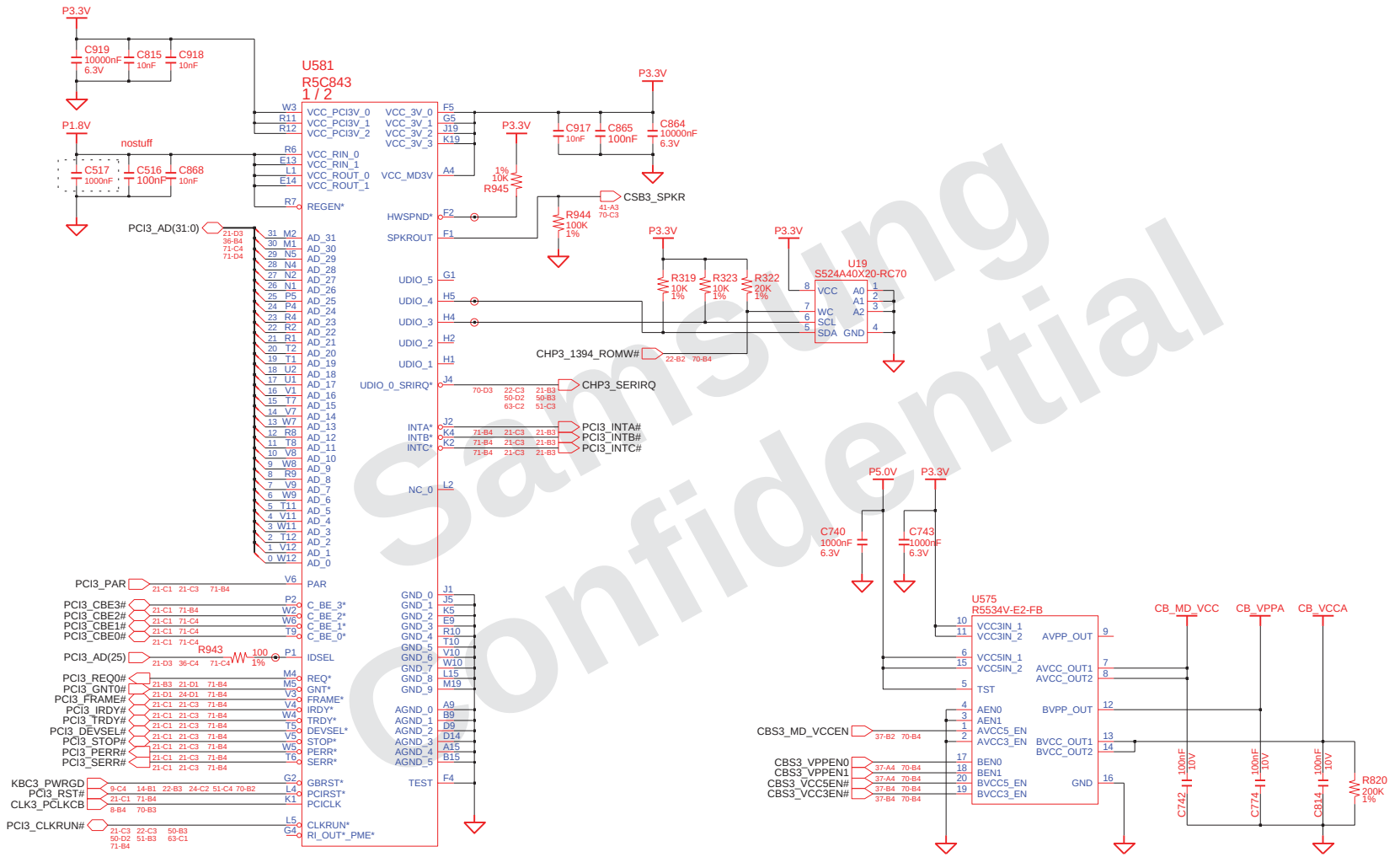

Samsung Confidential

http://hobi-elektronika.net

DRAW	YZ KIM	DATE	2/8/2007	TITLE	SYDNEY CARD BUS CONTROLLER R5C843(1/2)
CHECK	SW PARK	DEV. STEP	PR		SAMSUNG ELECTRONICS
APPROVAL	BJ LEE	REV	1.0		PART NO. BA41-0071#A
MODULE CODE		LAST EDIT	February 8, 2007 10:00:08 PM		PAGE 36 OF 74

SAMSUNG PROPRIETARY
THIS DOCUMENT CONTAINS CONFIDENTIAL PROPRIETARY INFORMATION THAT IS SAMSUNG ELECTRONICS CO'S PROPERTY. DO NOT DISCLOSE TO OR DUPLICATE FOR OTHERS EXCEPT AS AUTHORIZED BY SAMSUNG.

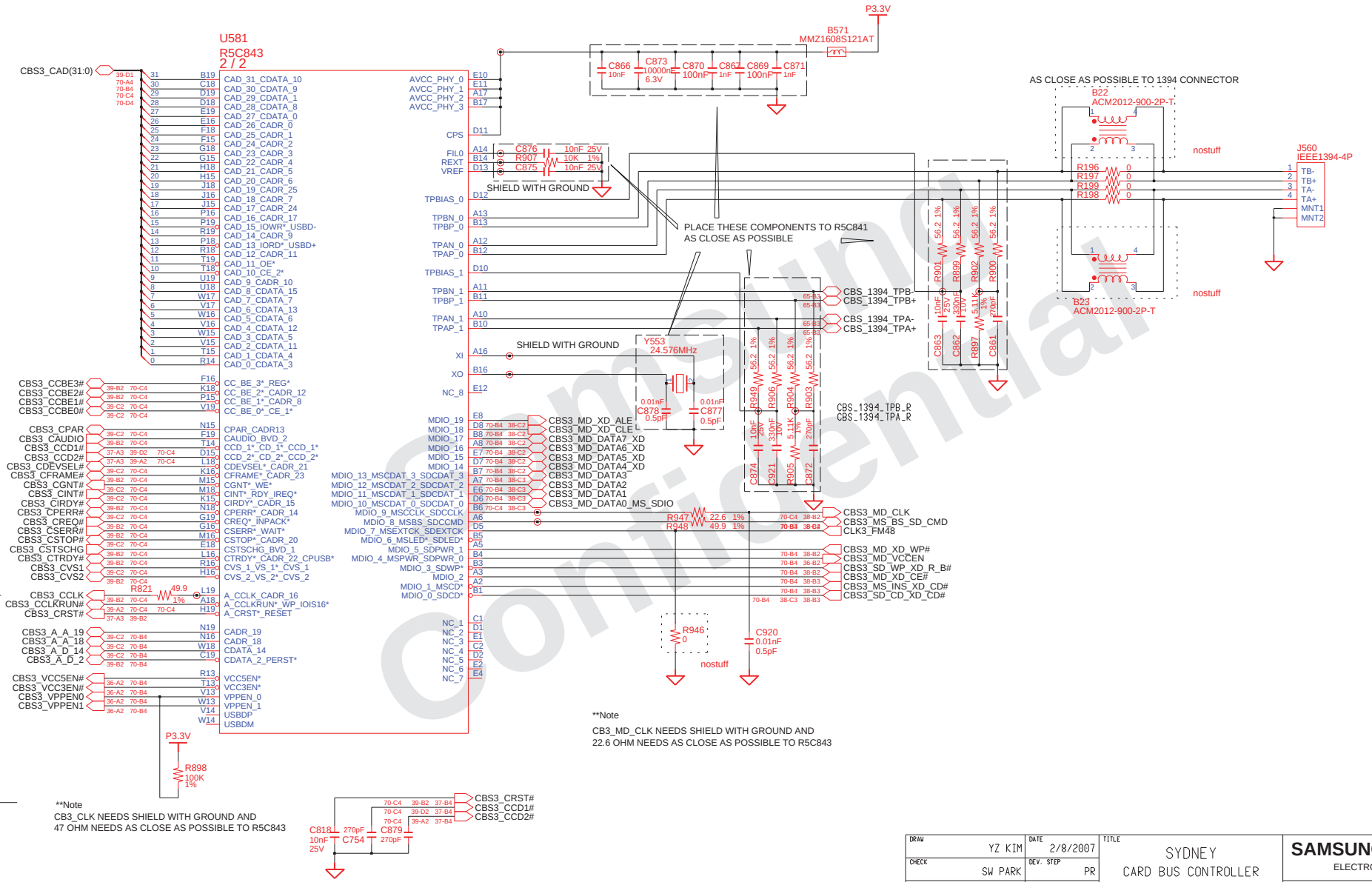

Samsung Confidential

http://hobi-elektronika.net

DRAW: YZ KIM	DATE: 2/8/2007	TITLE: SYDNEY CARD BUS CONTROLLER R5C843(2/2)	SAMSUNG ELECTRONICS
CHECK: SW PARK	DEV. STEP: PR		PART NO. BA41-0071#A
APPROVAL: BJ LEE	REV: 1.0		
MODULE CODE: undefined	LAST EDIT: February 8, 2007 10:00:08 PM		PAGE 37 OF 74

SAMSUNG PROPRIETARY
THIS DOCUMENT CONTAINS CONFIDENTIAL
PROPRIETARY INFORMATION THAT IS
SAMSUNG ELECTRONICS CO'S PROPERTY.
DO NOT DISCLOSE TO OR DUPLICATE FOR OTHERS
EXCEPT AS AUTHORIZED BY SAMSUNG.

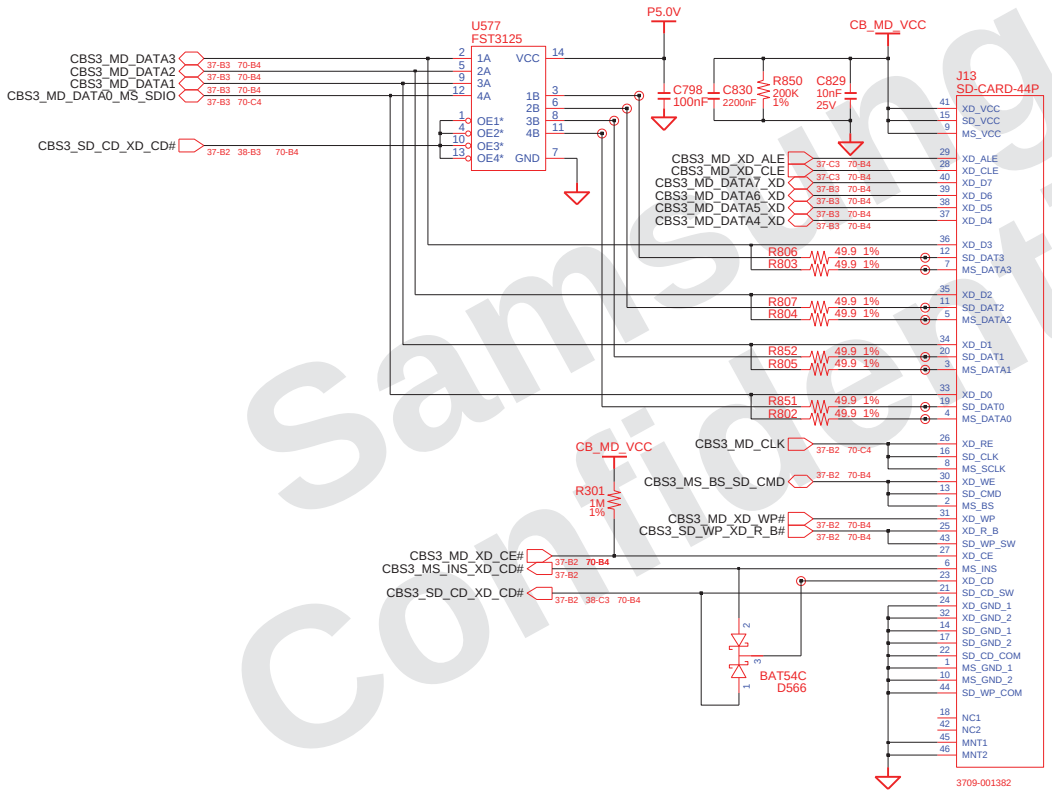

Samsung Confidential

http://hobi-elektronika.net

DRAW YZ KIM	DATE 2/8/2007	TITLE SYDNEY CARD BUS CONTROLLER 4-I ONE CONNECTOR	SAMSUNG ELECTRONICS
CHECK SW PARK	DEV. STEP PR		PART NO. BA41-0071#A
APPROVAL BJ LEE	REV 1.0		
MODULE CODE undefined	LAST EDIT February 8, 2007 10:00:08 PM		PAGE 38 OF 74

SAMSUNG PROPRIETARY
THIS DOCUMENT CONTAINS CONFIDENTIAL
PROPRIETARY INFORMATION THAT IS
SAMSUNG ELECTRONICS CO'S PROPERTY.
DO NOT DISCLOSE TO OR DUPLICATE FOR OTHERS
EXCEPT AS AUTHORIZED BY SAMSUNG.

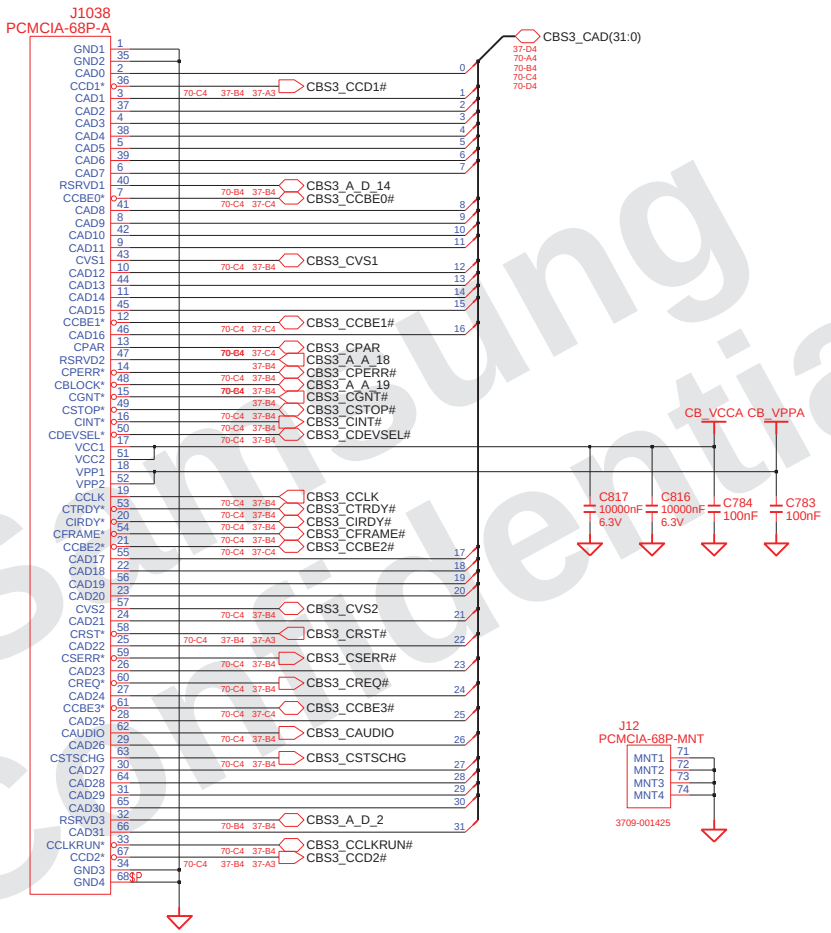

Samsung Confidential

http://hobi-elektronika.net

DRAW YZ KIM	DATE 2/8/2007	TITLE SYDNEY CARD BUS CONTROLLER EXPRESS CARD & PCMCIA CONN	SAMSUNG ELECTRONICS
CHECK SW PARK	DEV. STEP PR		PART NO. BA41-0071#A
APPROVAL BJ LEE	REV 1.0		
MODULE CODE undefined	LAST EDIT February 8, 2007 10:00:08 PM	PAGE 39 OF 74	

SAMSUNG PROPRIETARY
THIS DOCUMENT CONTAINS CONFIDENTIAL PROPRIETARY INFORMATION THAT IS SAMSUNG ELECTRONICS CO'S PROPERTY. DO NOT DISCLOSE TO OR DUPLICATE FOR OTHERS EXCEPT AS AUTHORIZED BY SAMSUNG.

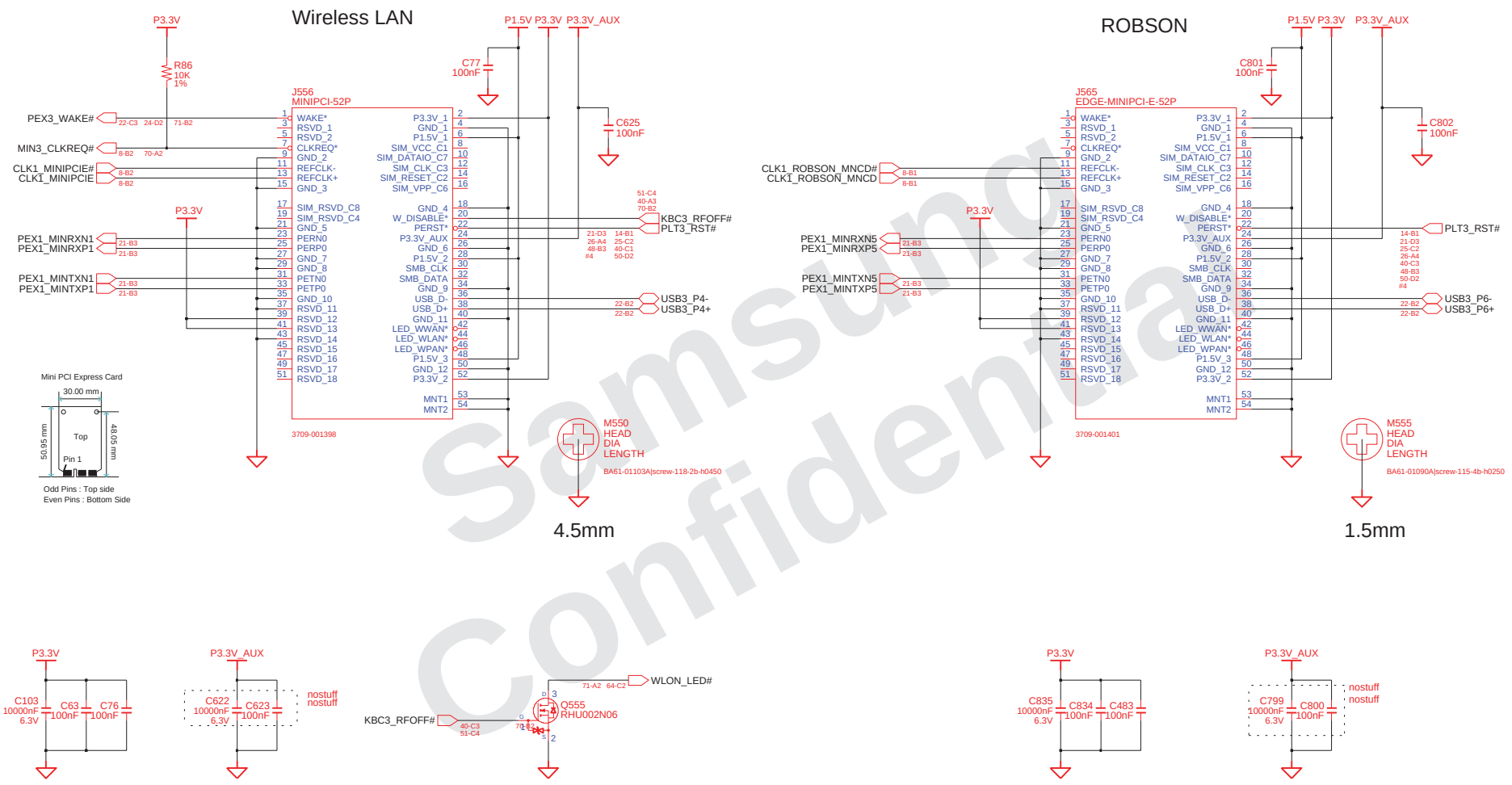

Samsung Confidential

http://hobi-elektronika.net

DRAW: YZ KIM	DATE: 2/8/2007	TITLE: SYDNEY MINICARD	SAMSUNG ELECTRONICS
CHECK: SW PARK	DEV. STEP: PR		PART NO. BA41-0071#A
APPROVAL: BJ LEE	REV: 1.0		
MODULE CODE	LAST EDIT: February 8, 2007 10:00:08 PM	PAGE 40 OF 74	

SAMSUNG PROPRIETARY
THIS DOCUMENT CONTAINS CONFIDENTIAL PROPRIETARY INFORMATION THAT IS SAMSUNG ELECTRONICS CO'S PROPERTY. DO NOT DISCLOSE TO OR DUPLICATE FOR OTHERS EXCEPT AS AUTHORIZED BY SAMSUNG.

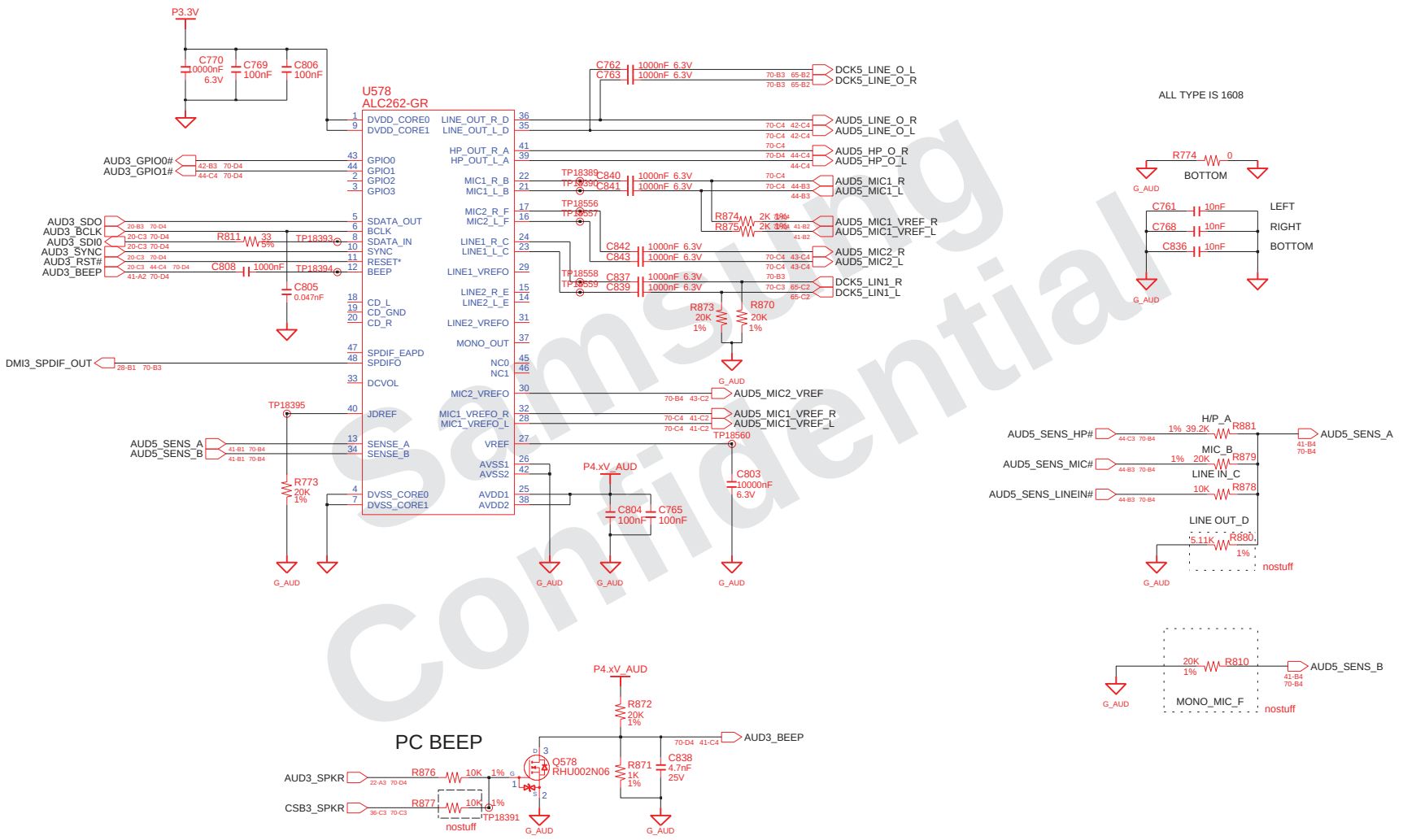

Samsung Confidential

http://hobi-elektronika.net

DRAW: YZ KIM	DATE: 2/8/2007	TITLE: SYDNEY AUDIO ALC262 CODEC	SAMSUNG ELECTRONICS
CHECK: SW PARK	DEV. STEP: PR		PART NO. BA41-0071#A
APPROVAL: BJ LEE	REV: 1.0		
MODULE CODE: undefined	LAST EDIT: February 8, 2007 10:00:08 PM		PAGE 41 OF 74

SAMSUNG PROPRIETARY
THIS DOCUMENT CONTAINS CONFIDENTIAL PROPRIETARY INFORMATION THAT IS SAMSUNG ELECTRONICS CO'S PROPERTY. DO NOT DISCLOSE TO OR DUPLICATE FOR OTHERS EXCEPT AS AUTHORIZED BY SAMSUNG.

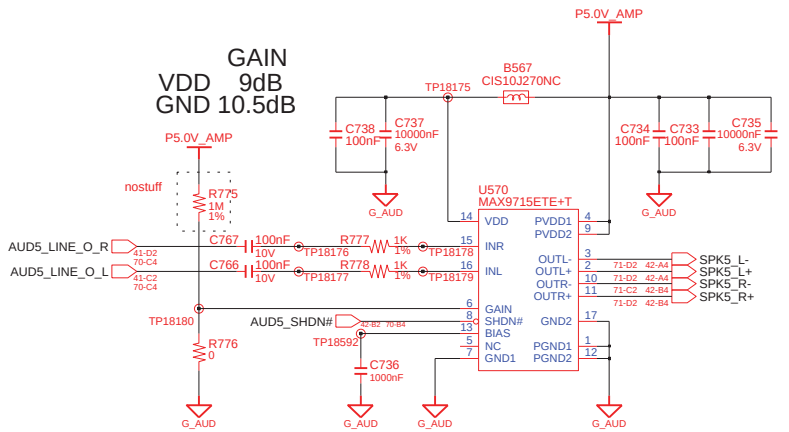

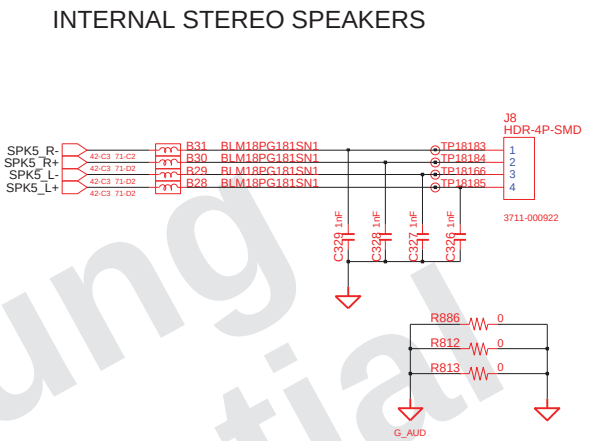

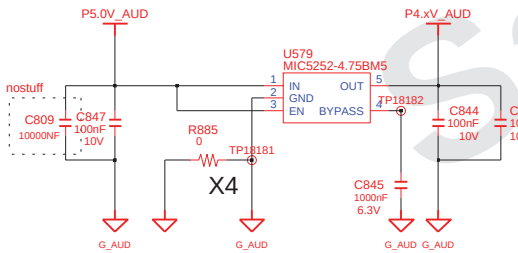

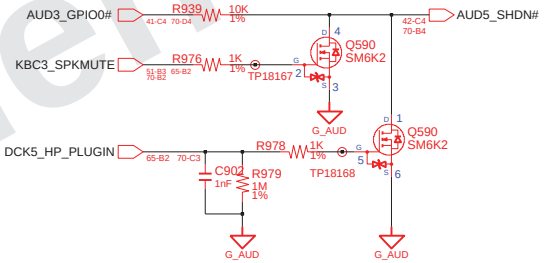

Samsung Confidential

http://hobi-elektronika.net

DRAW YZ KIM	DATE 2/8/2007	TITLE SYDNEY AUDIO 2nd CODEC / SPEAKER	SAMSUNG ELECTRONICS
CHECK SW PARK	DEV. STEP PR		PART NO. BA41-0071#A
APPROVAL BJ LEE	REV 1.0		
MODULE CODE	LAST EDIT February 8, 2007 10:00:08 PM		PAGE 42 OF 74

SAMSUNG PROPRIETARY
THIS DOCUMENT CONTAINS CONFIDENTIAL
PROPRIETARY INFORMATION THAT IS
SAMSUNG ELECTRONICS CO'S PROPERTY.
DO NOT DISCLOSE TO OR DUPLICATE FOR OTHERS
EXCEPT AS AUTHORIZED BY SAMSUNG.

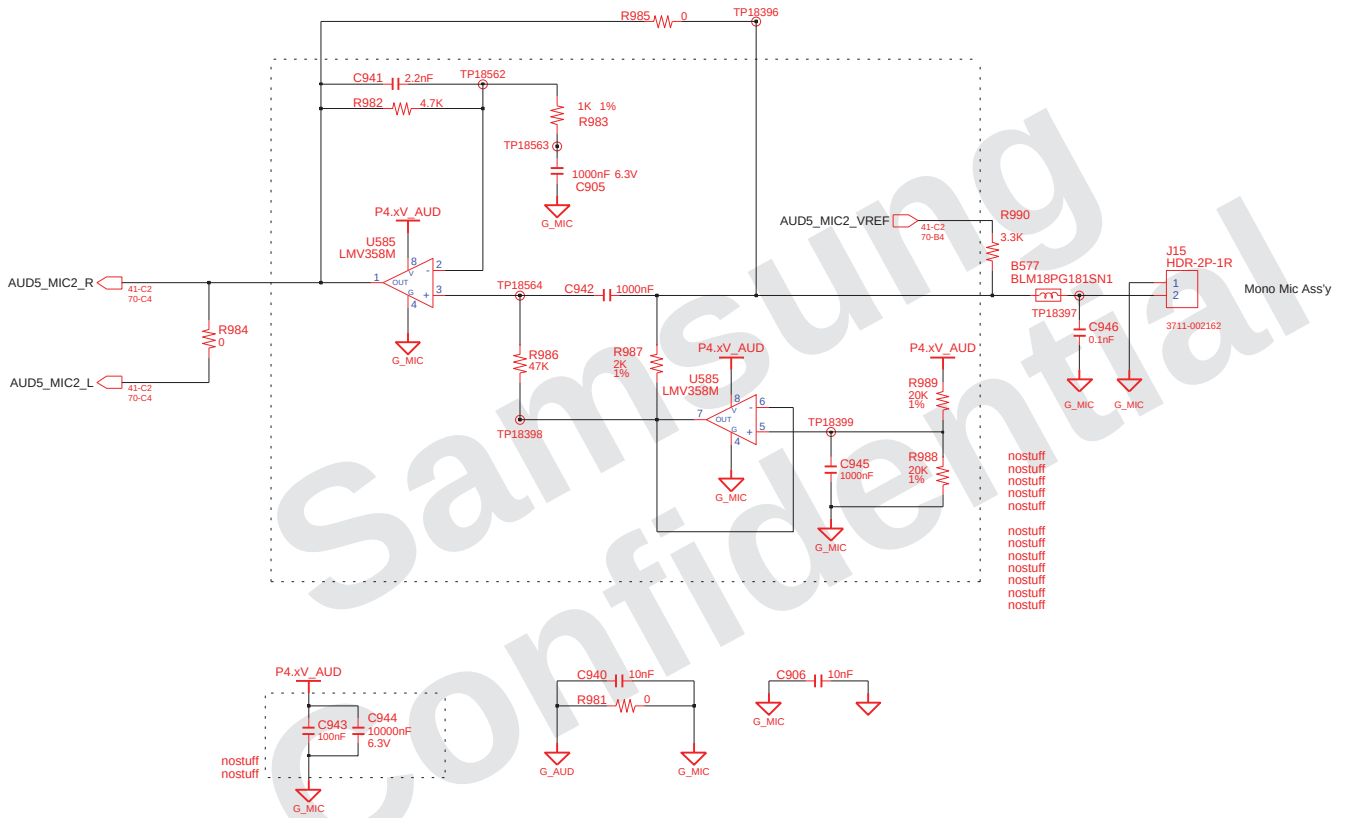

Samsung Confidential

http://hobi-elektronika.net

DRAW YZ KIM	DATE 2/8/2007	TITLE SYDNEY AUDIO MONO MIC	SAMSUNG ELECTRONICS
CHECK SW PARK	DEV. STEP PR		PART NO. BA41-0071#A
APPROVAL BJ LEE	REV 1.0		
MODULE CODE undefined	LAST EDIT February 8, 2007 10:00:08 PM	PAGE 43 OF 74	

SAMSUNG PROPRIETARY
THIS DOCUMENT CONTAINS CONFIDENTIAL
PROPRIETARY INFORMATION THAT IS
SAMSUNG ELECTRONICS CO'S PROPERTY.
DO NOT DISCLOSE TO OR DUPLICATE FOR OTHERS
EXCEPT AS AUTHORIZED BY SAMSUNG.

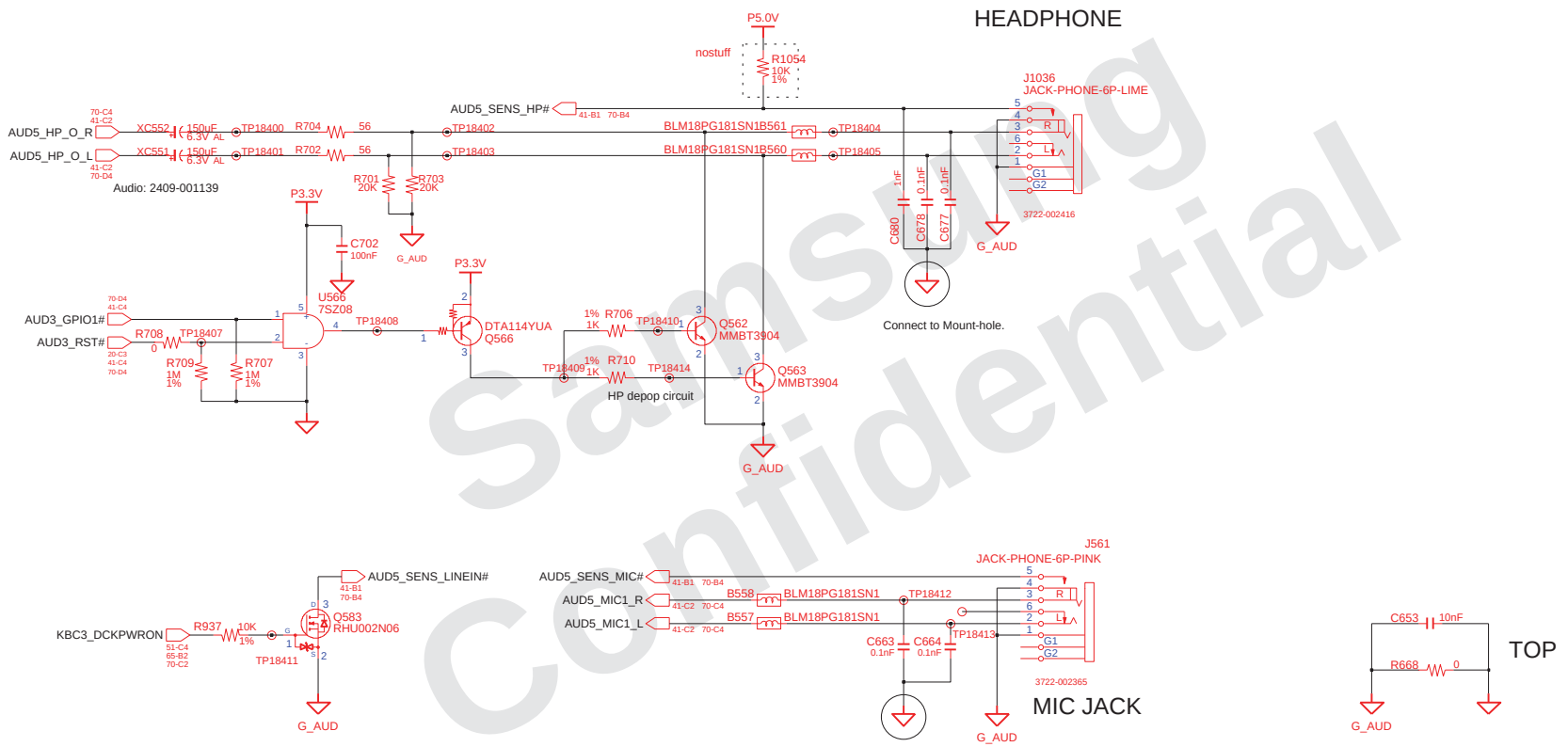

The traces led to Audio Jacks have the width over 10mil

Samsung Confidential

http://hobi-elektronika.net

DRAW YZ KIM	DATE 2/8/2007	TITLE SYDNEY AUDIO HEADPHONE & MIC JACK	SAMSUNG ELECTRONICS
CHECK SW PARK	DEV. STEP PR		PART NO. BA41-0071#A
APPROVAL BJ LEE	REV 1.0		
MODULE CODE	LAST EDIT February 8, 2007 10:00:08 PM		PAGE 44 OF 74

SAMSUNG PROPRIETARY
THIS DOCUMENT CONTAINS CONFIDENTIAL
PROPRIETARY INFORMATION THAT IS
SAMSUNG ELECTRONICS CO'S PROPERTY.
DO NOT DISCLOSE TO OR DUPLICATE FOR OTHERS
EXCEPT AS AUTHORIZED BY SAMSUNG.

AUDIO POWER

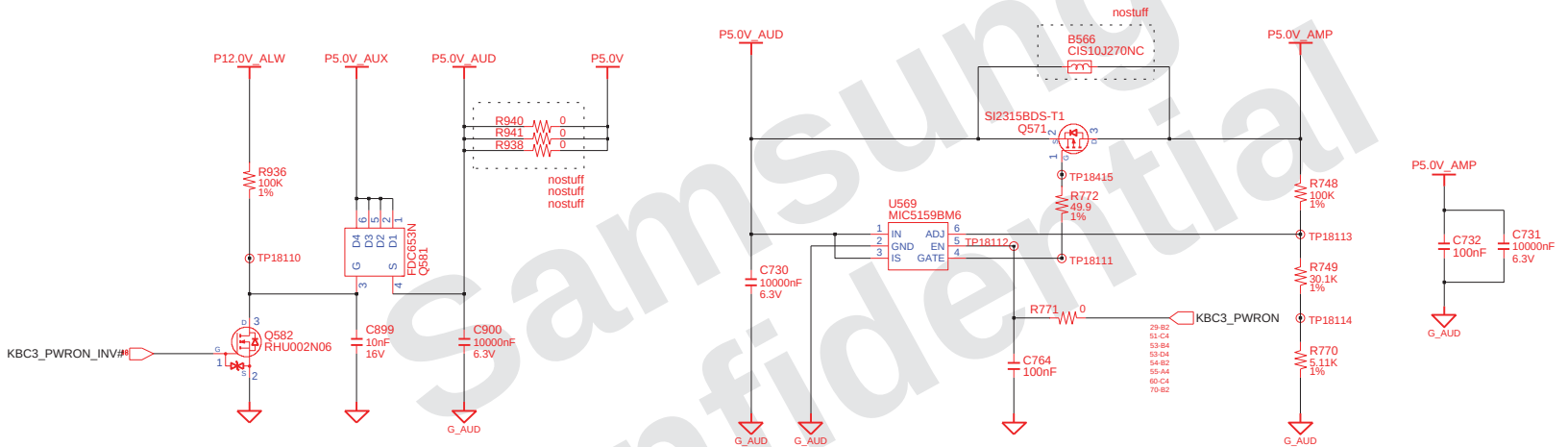

Samsung Confidential

http://hobi-elektronika.net

DRAW YZ KIM	DATE 2/8/2007	TITLE SYDNEY AUDIO AUDIO AMP POWER	SAMSUNG ELECTRONICS
CHECK SW PARK	DEV. STEP PR		PART NO. BA41-0071#A
APPROVAL BJ LEE	REV 1.0		
MODULE CODE undefined	LAST EDIT February 8, 2007 10:00:08 PM		PAGE 45 OF 74

SAMSUNG PROPRIETARY
THIS DOCUMENT CONTAINS CONFIDENTIAL PROPRIETARY INFORMATION THAT IS SAMSUNG ELECTRONICS CO'S PROPERTY. DO NOT DISCLOSE TO OR DUPLICATE FOR OTHERS EXCEPT AS AUTHORIZED BY SAMSUNG.

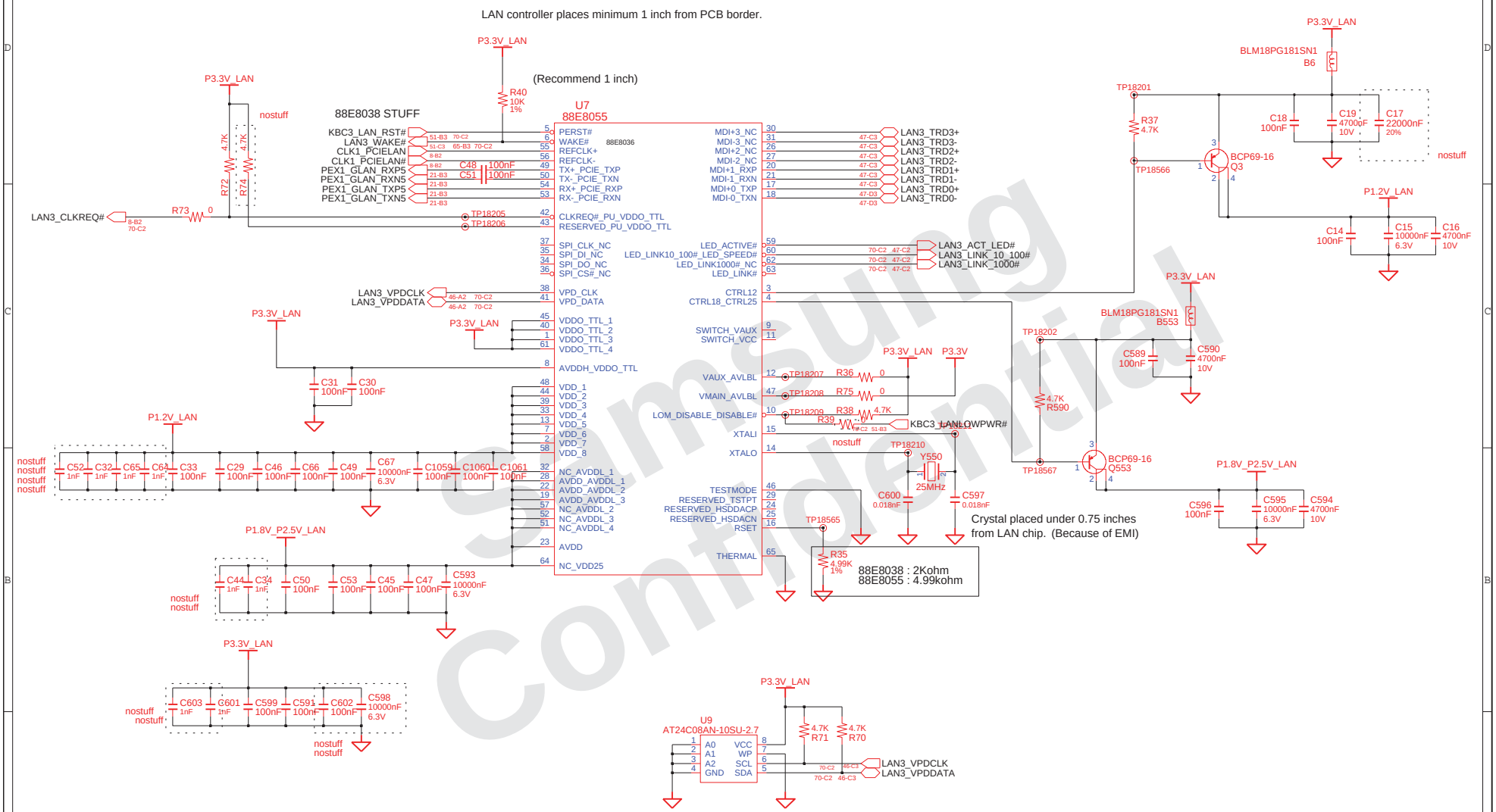

Samsung Confidential

http://hobi-elektronika.net

DRAW: YZ KIM	DATE: 2/8/2007	TITLE: SYDNEY WIRED LAN MARVELL 88E8055	SAMSUNG ELECTRONICS
CHECK: SW PARK	DEV. STEP: PR		
APPROVAL: BJ LEE	REV: 1.0		PART NO. BA41-0071#A
MODULE CODE	LAST EDIT: February 8, 2007 10:00:08 PM		PAGE 46 OF 74

SAMSUNG PROPRIETARY
THIS DOCUMENT CONTAINS CONFIDENTIAL
PROPRIETARY INFORMATION THAT IS
SAMSUNG ELECTRONICS CO'S PROPERTY.
DO NOT DISCLOSE TO OR DUPLICATE FOR OTHERS
EXCEPT AS AUTHORIZED BY SAMSUNG.

LAN Connector

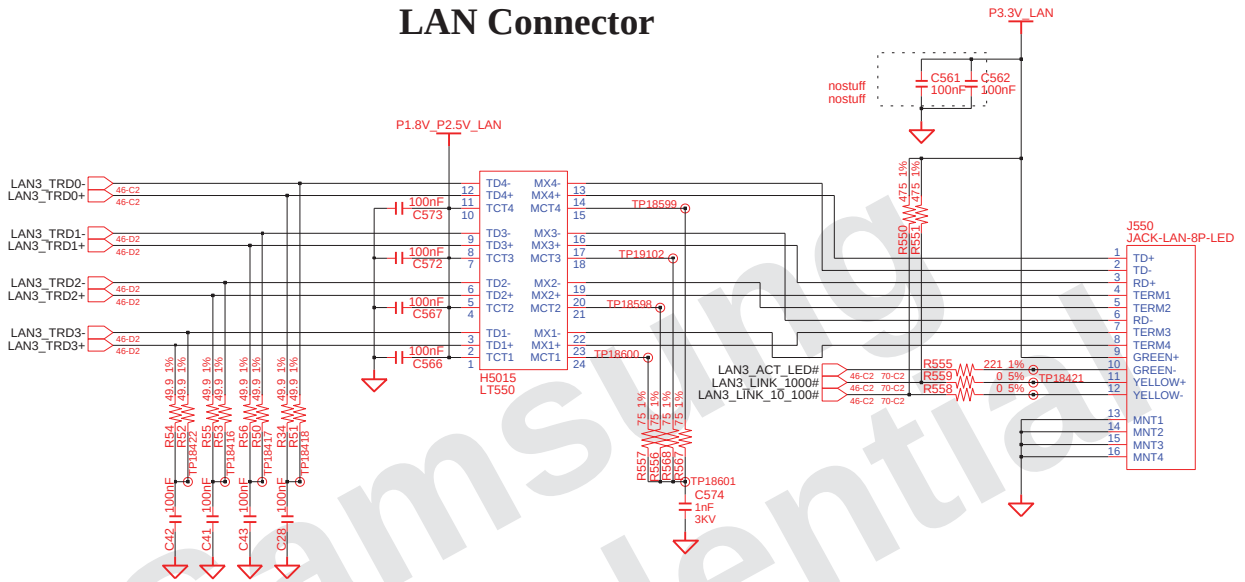

MODEM Connector (Jack)

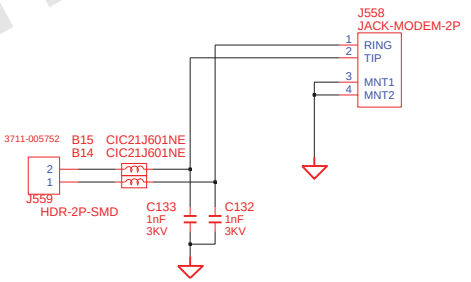

Samsung Confidential

http://hobi-elektronika.net

DRAW YZ KIM	DATE 2/8/2007	TITLE SYDNEY WIRED LAN / MODEM RJ45 / RJ11	SAMSUNG ELECTRONICS
CHECK SW PARK	DEV. STEP PR		PART NO. BA41-0071#A
APPROVAL BJ LEE	REV 1.0		
MODULE CODE	LAST EDIT February 8, 2007 10:00:08 PM	PAGE 47 OF 74	

SAMSUNG PROPRIETARY
THIS DOCUMENT CONTAINS CONFIDENTIAL PROPRIETARY INFORMATION THAT IS SAMSUNG ELECTRONICS CO'S PROPERTY. DO NOT DISCLOSE TO OR DUPLICATE FOR OTHERS EXCEPT AS AUTHORIZED BY SAMSUNG.

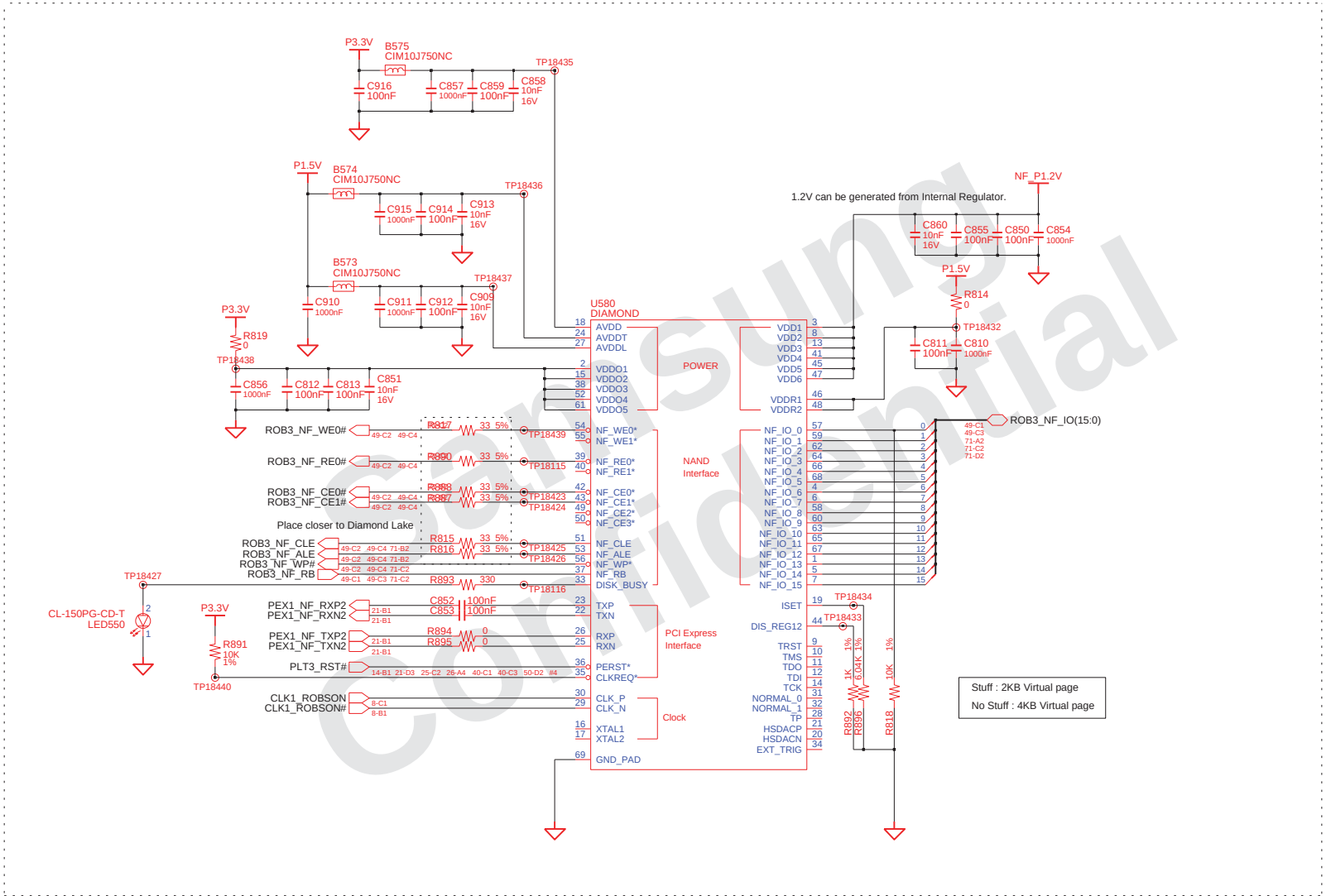

Samsung Confidential

http://hobi-elektronika.net

DRAW: YZ KIM	DATE: 2/8/2007	TITLE: SYDNEY ROBSON DIAMON LAKE	SAMSUNG ELECTRONICS
CHECK: SW PARK	DEV. STEP: PR		PART NO. BA41-0071#A
APPROVAL: BJ LEE	REV: 1.0		
MODULE CODE	LAST EDIT: February 8, 2007 10:00:08 PM		PAGE 48 OF 74

SAMSUNG PROPRIETARY
THIS DOCUMENT CONTAINS CONFIDENTIAL
PROPRIETARY INFORMATION THAT IS
SAMSUNG ELECTRONICS CO'S PROPERTY.
DO NOT DISCLOSE TO OR DUPLICATE FOR OTHERS
EXCEPT AS AUTHORIZED BY SAMSUNG.

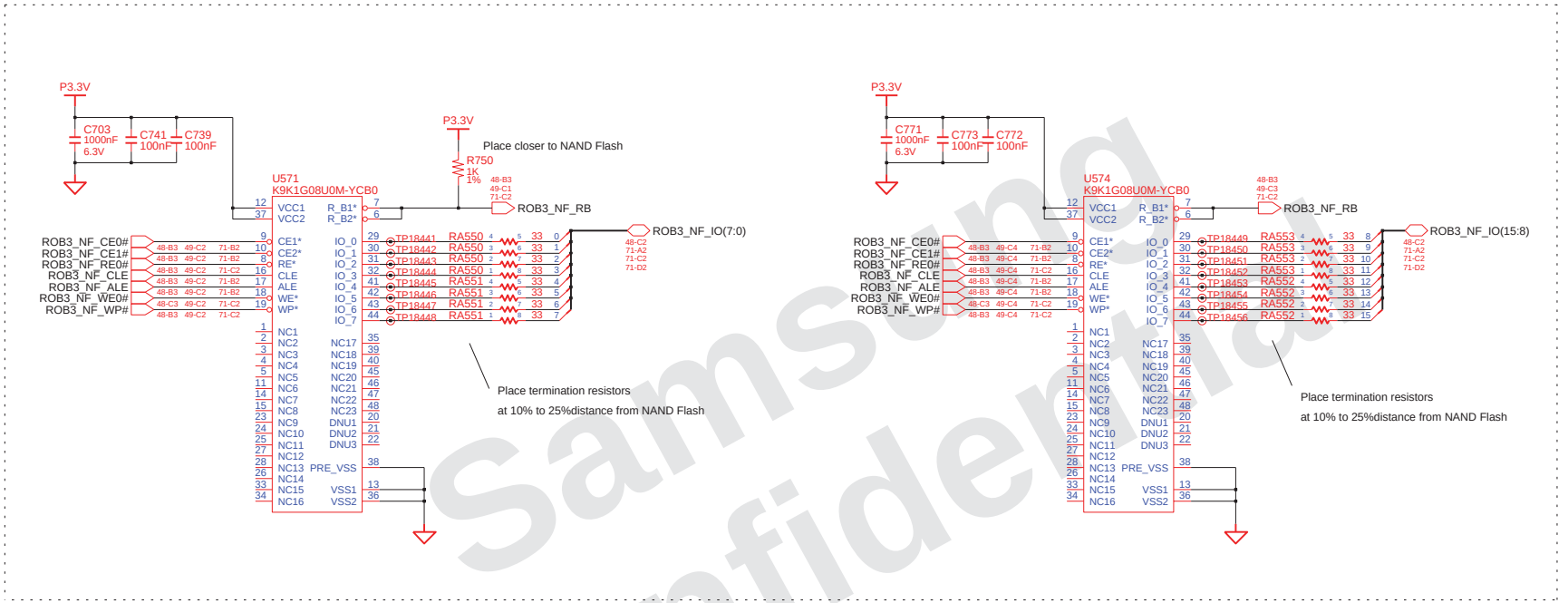

nostuff
nostuff
nostuff
nostuff
nostuff
nostuff
nostuff
nostuff
nostuff
nostuff
nostuff
nostuff
nostuff

> Samsung NAND Flash
4Gb : K9K4G08U0M (Lead Free)
2Gb : K9K2G08U0M (Lead Free)
1Gb : K9F1G08U0A (Lead Free)

nostuff
nostuff
nostuff
nostuff
nostuff
nostuff
nostuff
nostuff
nostuff
nostuff
nostuff
nostuff
nostuff

Samsung Confidential

http://hobi-elektronika.net

DRAW YZ KIM	DATE 2/8/2007	TITLE SYDNEY ROBSON NAND FLASH	SAMSUNG ELECTRONICS
CHECK SW PARK	DEV. STEP PR		PART NO. BA41-0071#A
APPROVAL BJ LEE	REV 1.0		
MODULE CODE	LAST EDIT February 8, 2007 10:00:08 PM		PAGE 49 OF 74

SAMSUNG PROPRIETARY
THIS DOCUMENT CONTAINS CONFIDENTIAL PROPRIETARY INFORMATION THAT IS SAMSUNG ELECTRONICS CO'S PROPERTY. DO NOT DISCLOSE TO OR DUPLICATE FOR OTHERS EXCEPT AS AUTHORIZED BY SAMSUNG.

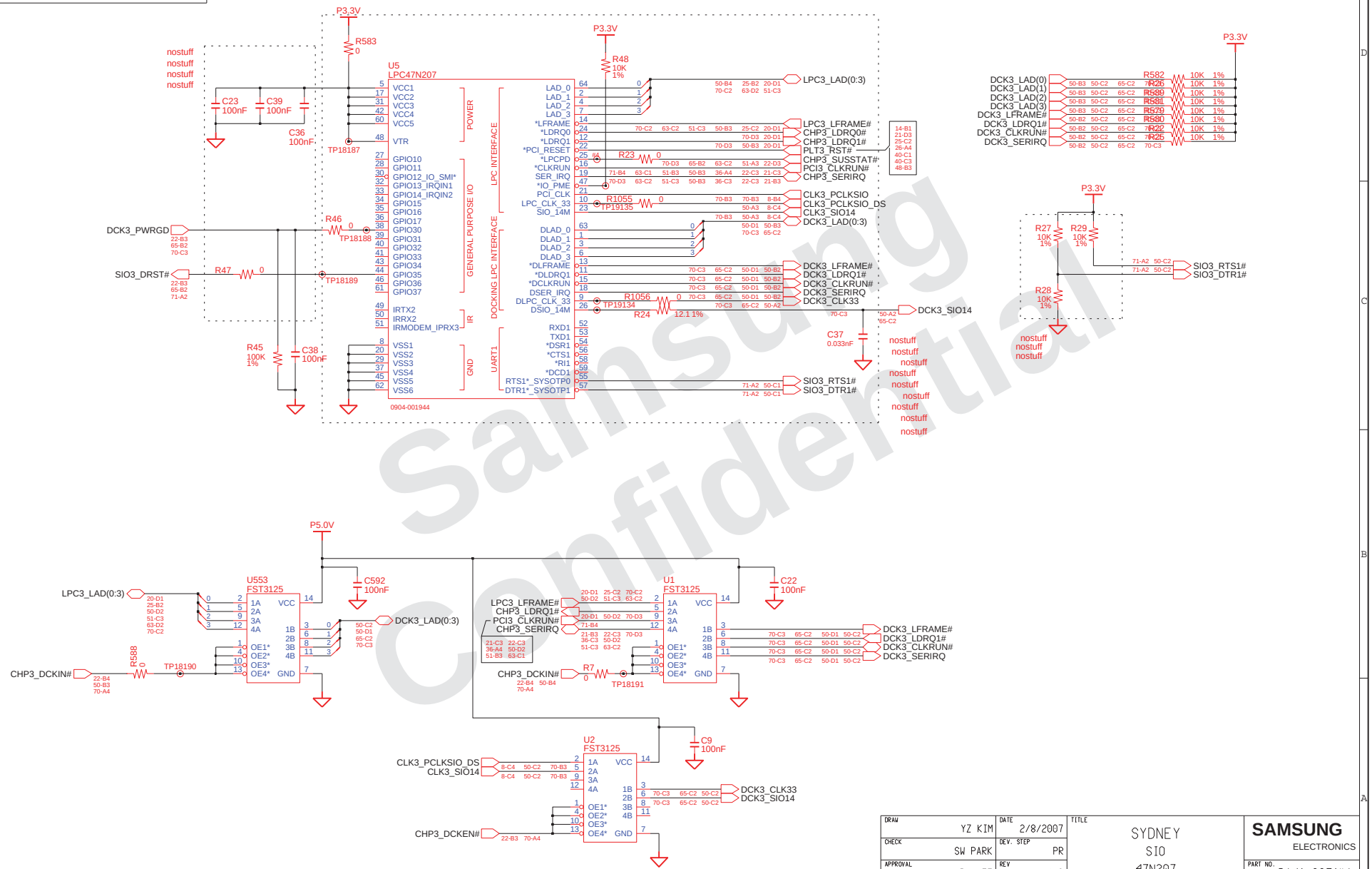

DRAW: YZ KIM	DATE: 2/8/2007	TITLE: SYDNEY SIO 47N207	SAMSUNG ELECTRONICS
CHECK: SW PARK	DEV. STEP: PR		PART NO. BA41-0071#A
APPROVAL: BJ LEE	REV: 1.0		
MODULE CODE	LAST EDIT: February 8, 2007 10:00:08 PM	PAGE 50 OF 74	

SAMSUNG PROPRIETARY

THIS DOCUMENT CONTAINS CONFIDENTIAL PROPRIETARY INFORMATION THAT IS SAMSUNG ELECTRONICS CO'S PROPERTY. DO NOT DISCLOSE TO OR DUPLICATE FOR OTHERS EXCEPT AS AUTHORIZED BY SAMSUNG.

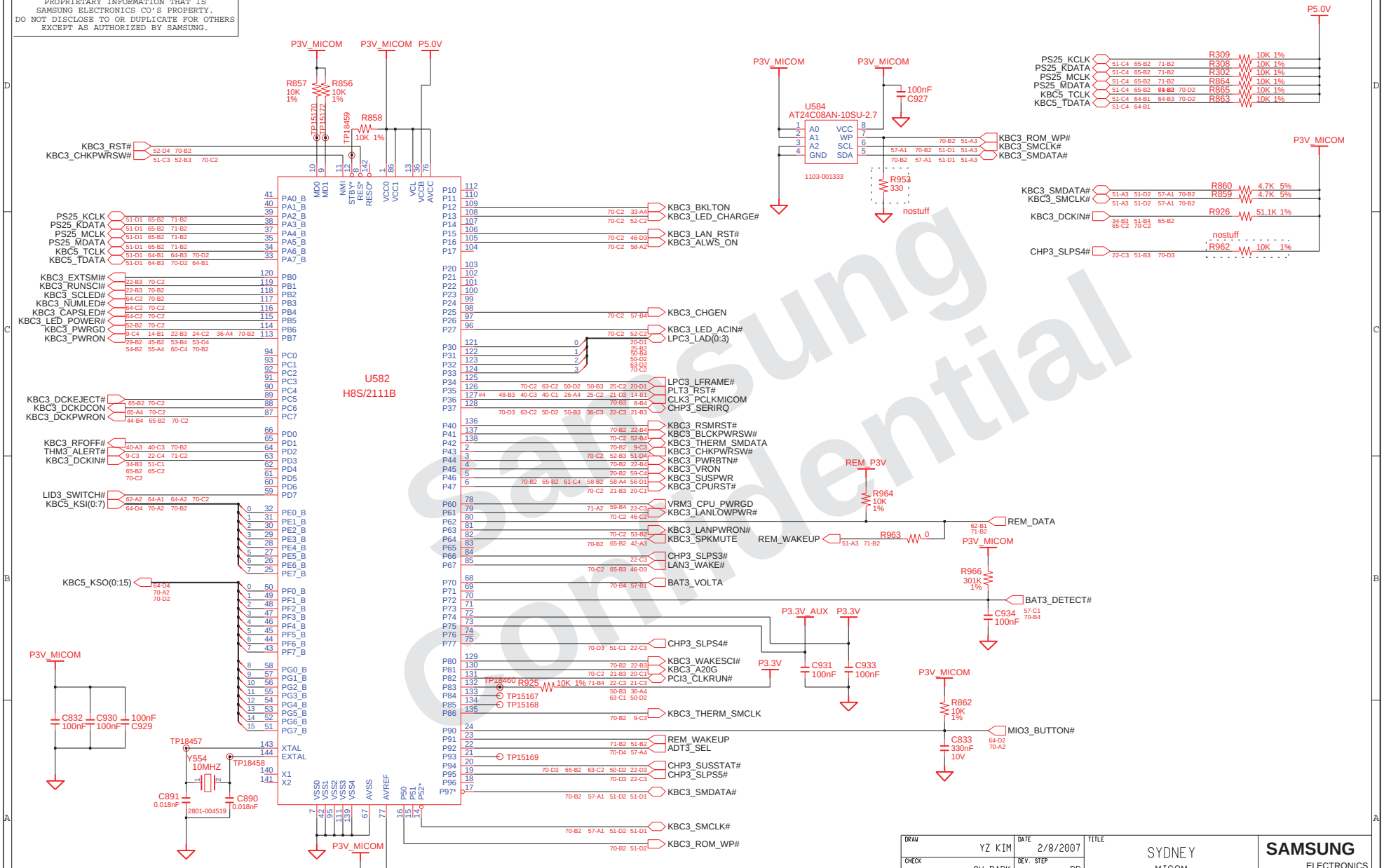

DRAW	YZ KIM	DATE	2/8/2007	TITLE	SYDNEY MICOM H8S/2111B	SAMSUNG ELECTRONICS
CHECK	SW PARK	DEV. STEP	PR			PART NO. BA41-0071#A
APPROVAL	BJ LEE	REV	1.0			
MODULE CODE		LAST EDIT	February 8, 2007 10:00:08 PM	PAGE	51 OF 74	

SAMSUNG PROPRIETARY
THIS DOCUMENT CONTAINS CONFIDENTIAL
PROPRIETARY INFORMATION THAT IS
SAMSUNG ELECTRONICS CO'S PROPERTY.
DO NOT DISCLOSE TO OR DUPLICATE FOR OTHERS
EXCEPT AS AUTHORIZED BY SAMSUNG.

MICOM RESET

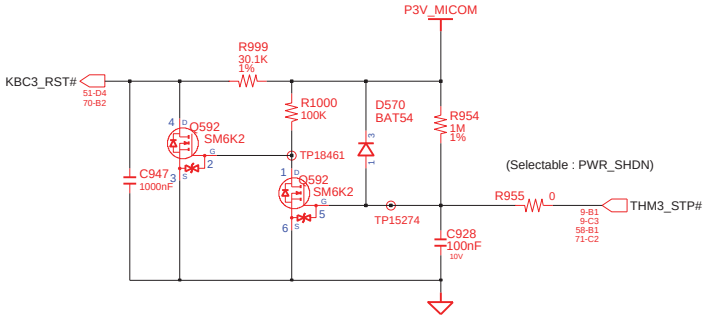

ADAPTER IN / CHARGING LED

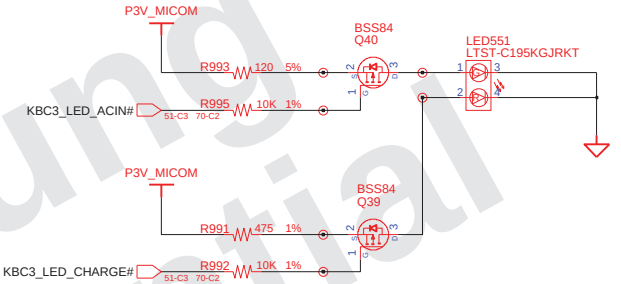

FOR MICOM UPDATE

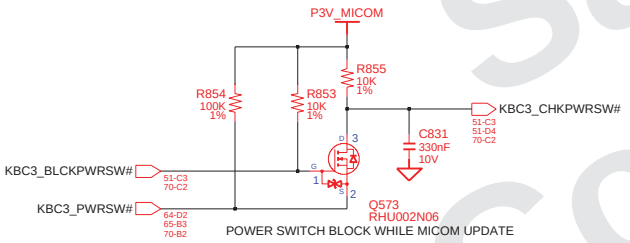

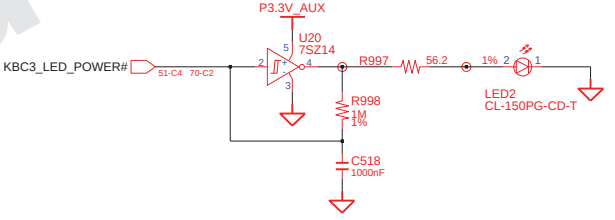

Samsung Confidential

http://hobi-elektronika.net

DRAW YZ KIM	DATE 2/8/2007	TITLE SYDNEY POWER MICOM & POWER Logic	SAMSUNG ELECTRONICS
CHECK SW PARK	DEV. STEP PR		PART NO. BA41-0071#A
APPROVAL BJ LEE	REV 1.0		
MODULE CODE	LAST EDIT February 8, 2007 10:00:08 PM	PAGE 52 OF 74	

SAMSUNG PROPRIETARY
THIS DOCUMENT CONTAINS CONFIDENTIAL PROPRIETARY INFORMATION THAT IS SAMSUNG ELECTRONICS CO'S PROPERTY. DO NOT DISCLOSE TO OR DUPLICATE FOR OTHERS EXCEPT AS AUTHORIZED BY SAMSUNG.

Switched Power On (P5V)

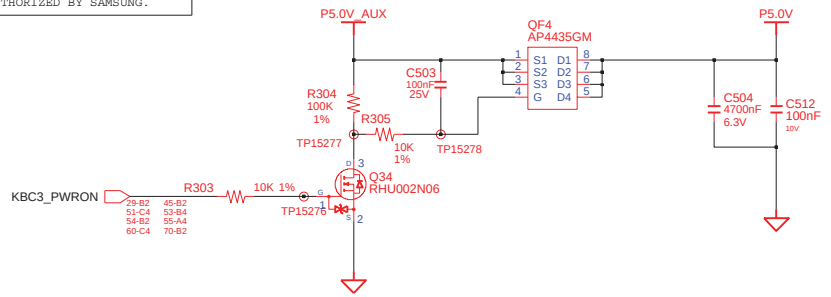

Switched Power On (P3.3V)

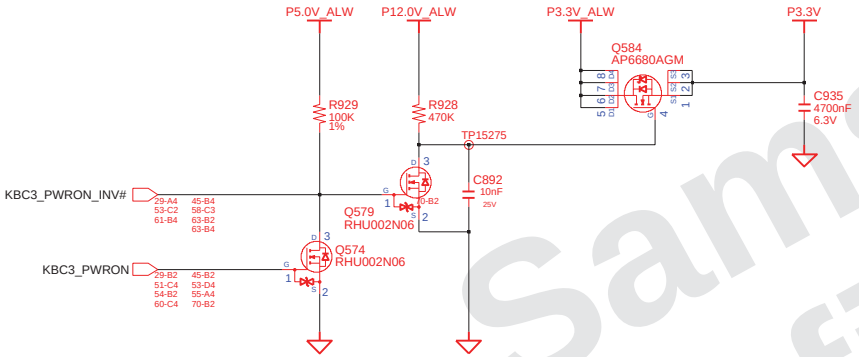

Switched Power On (P1.8V)

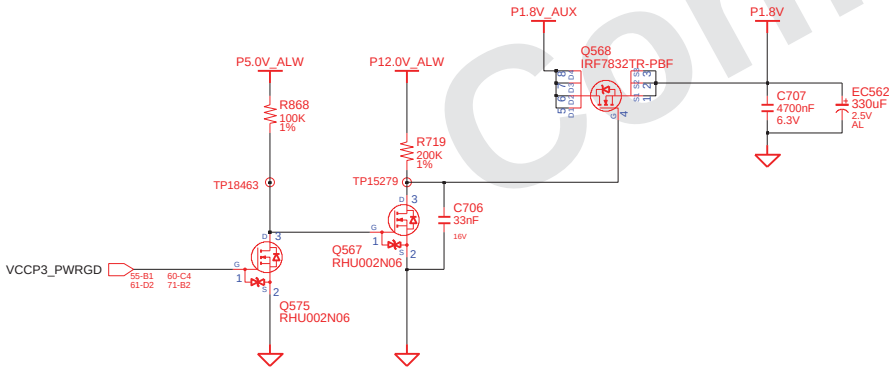

Switched Power On (P1.2V)

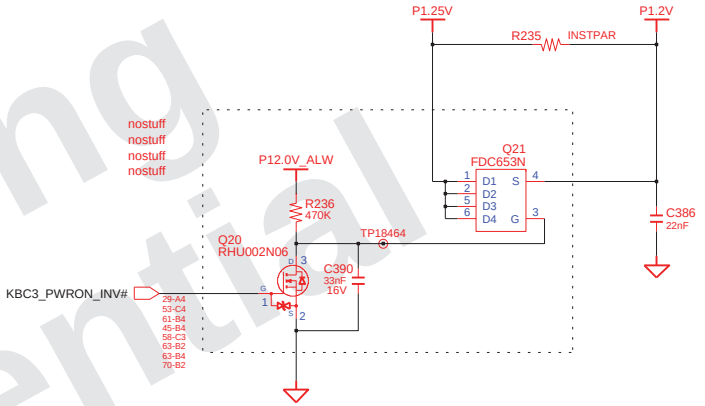

Switched Power On (P3.3V_LAN)

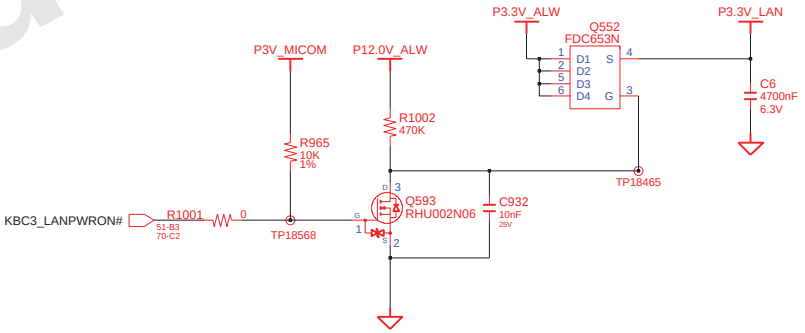

Samsung Confidential

http://hobi-elektronika.net

DRAW: YZ KIM	DATE: 2/8/2007	TITLE: SYDNEY POWER SWITCHED POWER	SAMSUNG ELECTRONICS
CHECK: SW PARK	DEV. STEP: PR		PART NO. BA41-0071#A
APPROVAL: BJ LEE	REV: 1.0		
MODULE CODE: undefined	LAST EDIT: February 8, 2007 10:00:08 PM		PAGE 53 OF 74

SAMSUNG PROPRIETARY
THIS DOCUMENT CONTAINS CONFIDENTIAL
PROPRIETARY INFORMATION THAT IS
SAMSUNG ELECTRONICS CO'S PROPERTY.
DO NOT DISCLOSE TO OR DUPLICATE FOR OTHERS
EXCEPT AS AUTHORIZED BY SAMSUNG.

P1.5V POWER

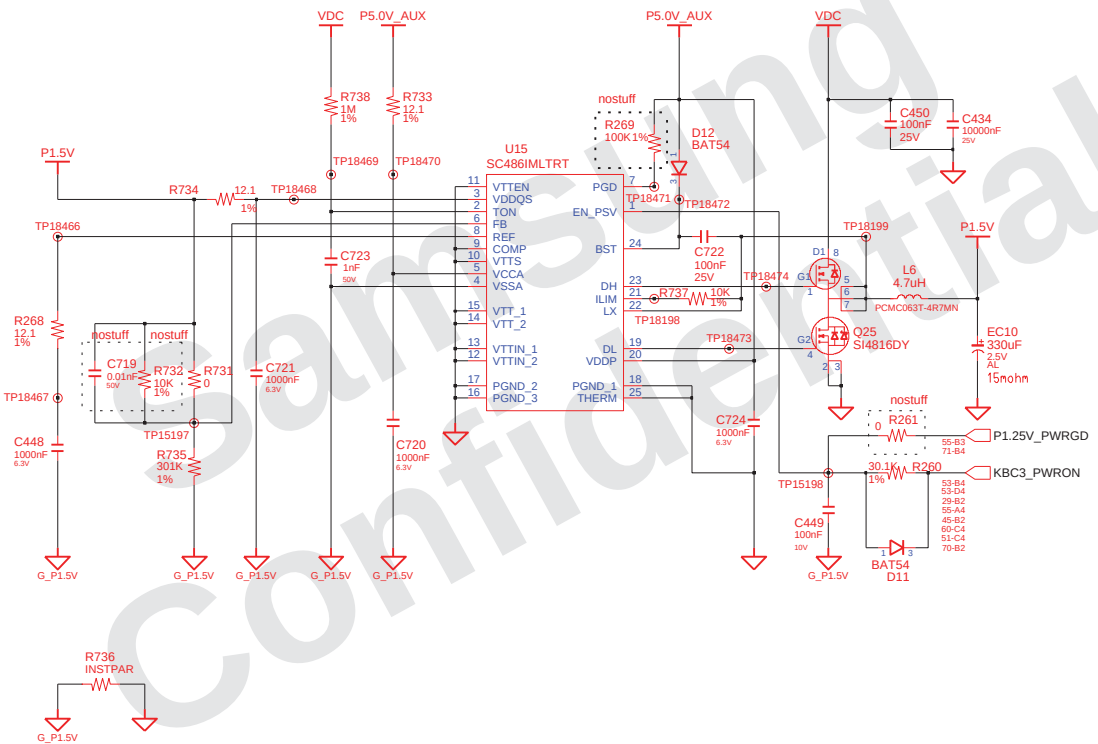

Samsung Confidential

http://hobi-elektronika.net

DRAW: YZ KIM	DATE: 2/8/2007	TITLE: SYDNEY POWER P1.5V POWER	SAMSUNG ELECTRONICS
CHECK: SW PARK	DEV. STEP: PR		PART NO. BA41-0071#A
APPROVAL: BJ LEE	REV: 1.0		
MODULE CODE	LAST EDIT: February 8, 2007 10:00:08 PM		PAGE 54 OF 74

SAMSUNG PROPRIETARY
THIS DOCUMENT CONTAINS CONFIDENTIAL
PROPRIETARY INFORMATION THAT IS
SAMSUNG ELECTRONICS CO'S PROPERTY.
DO NOT DISCLOSE TO OR DUPLICATE FOR OTHERS
EXCEPT AS AUTHORIZED BY SAMSUNG.

P1.25V / P1.05V POWER

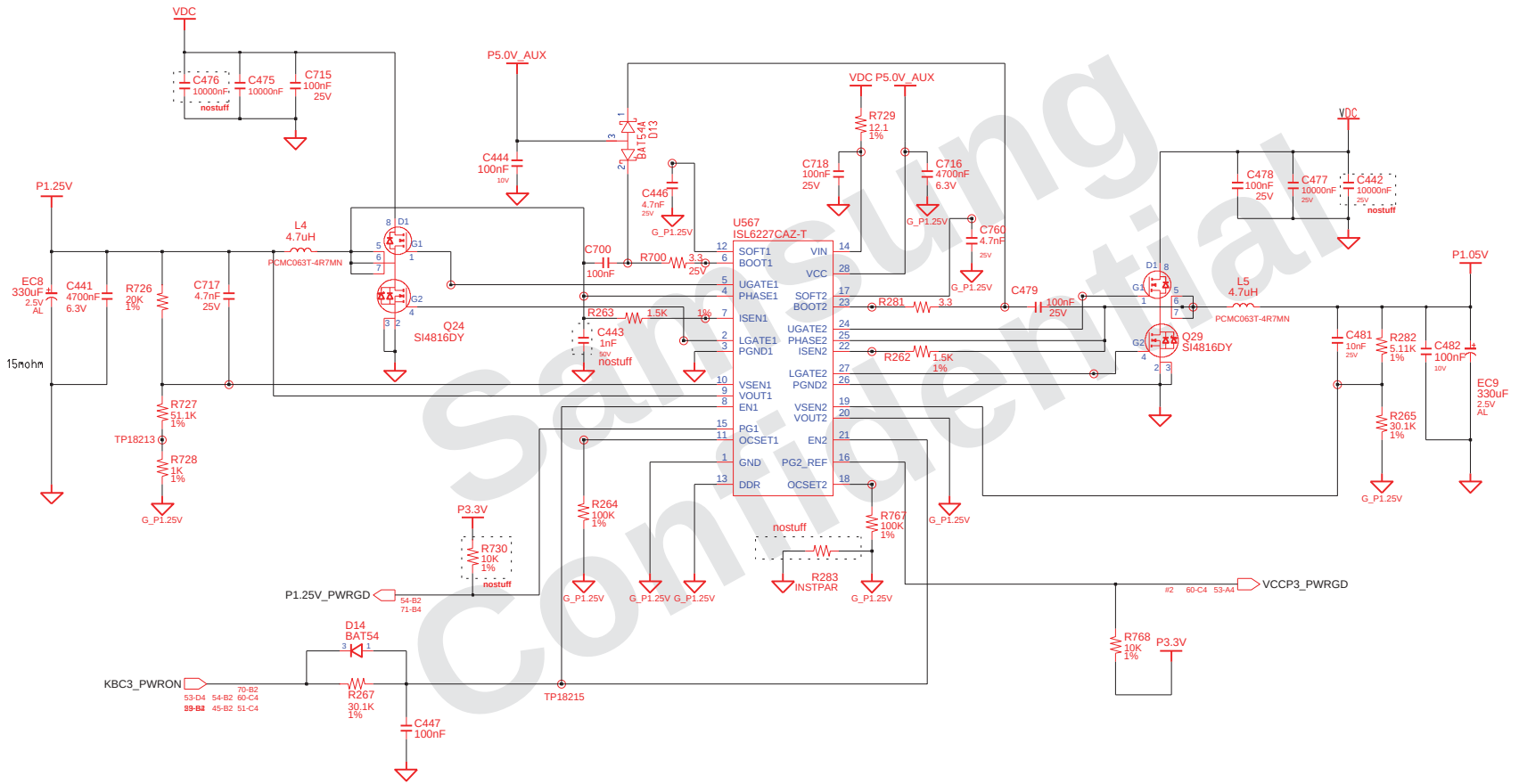

Samsung Confidential

http://hobi-elektronika.net

DRAW YZ KIM	DATE 2/8/2007	TITLE SYDNEY POWER TPS5130(P1.05,P1.5V)	SAMSUNG ELECTRONICS
CHECK SW PARK	DEV. STEP PR		PART NO. BA41-0071#A
APPROVAL BJ LEE	REV 1.0		
MODULE CODE	LAST EDIT February 8, 2007 10:00:08 PM		PAGE 55 OF 74

SAMSUNG PROPRIETARY
THIS DOCUMENT CONTAINS CONFIDENTIAL
PROPRIETARY INFORMATION THAT IS
SAMSUNG ELECTRONICS CO'S PROPERTY.
DO NOT DISCLOSE TO OR DUPLICATE FOR OTHERS
EXCEPT AS AUTHORIZED BY SAMSUNG.

DDR2 Power

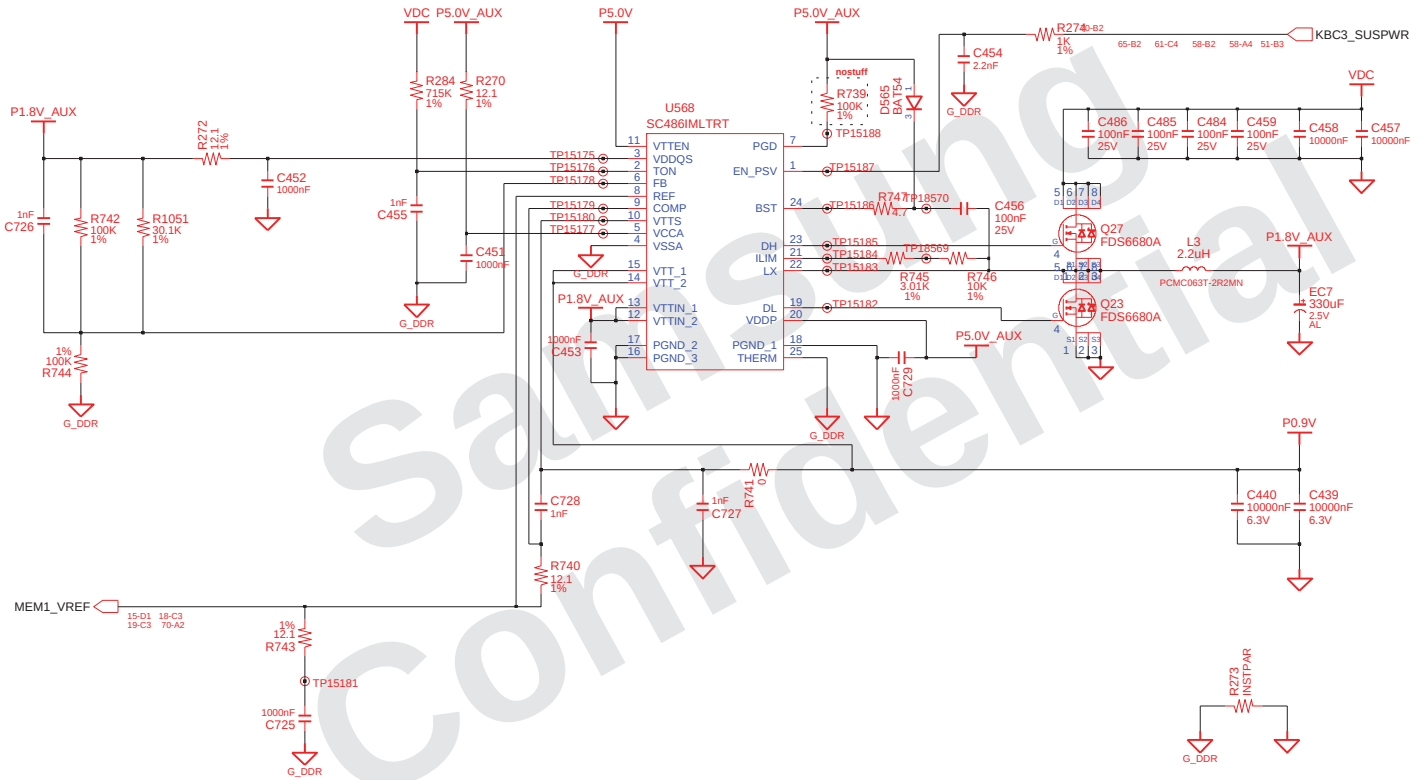

Samsung Confidential

http://hobi-elektronika.net

DRAW: YZ KIM	DATE: 2/8/2007	TITLE: SYDNEY POWER DDR2 POWER	SAMSUNG ELECTRONICS
CHECK: SW PARK	DEV. STEP: PR		PART NO. BA41-0071#A
APPROVAL: BJ LEE	REV: 1.0		
MODULE CODE: undefined	LAST EDIT: February 8, 2007 10:00:08 PM		PAGE 56 OF 74

SAMSUNG PROPRIETARY
THIS DOCUMENT CONTAINS CONFIDENTIAL PROPRIETARY INFORMATION THAT IS SAMSUNG ELECTRONICS CO'S PROPERTY. DO NOT DISCLOSE TO OR DUPLICATE FOR OTHERS EXCEPT AS AUTHORIZED BY SAMSUNG.

CHARGER & POWER MANAGEMENT

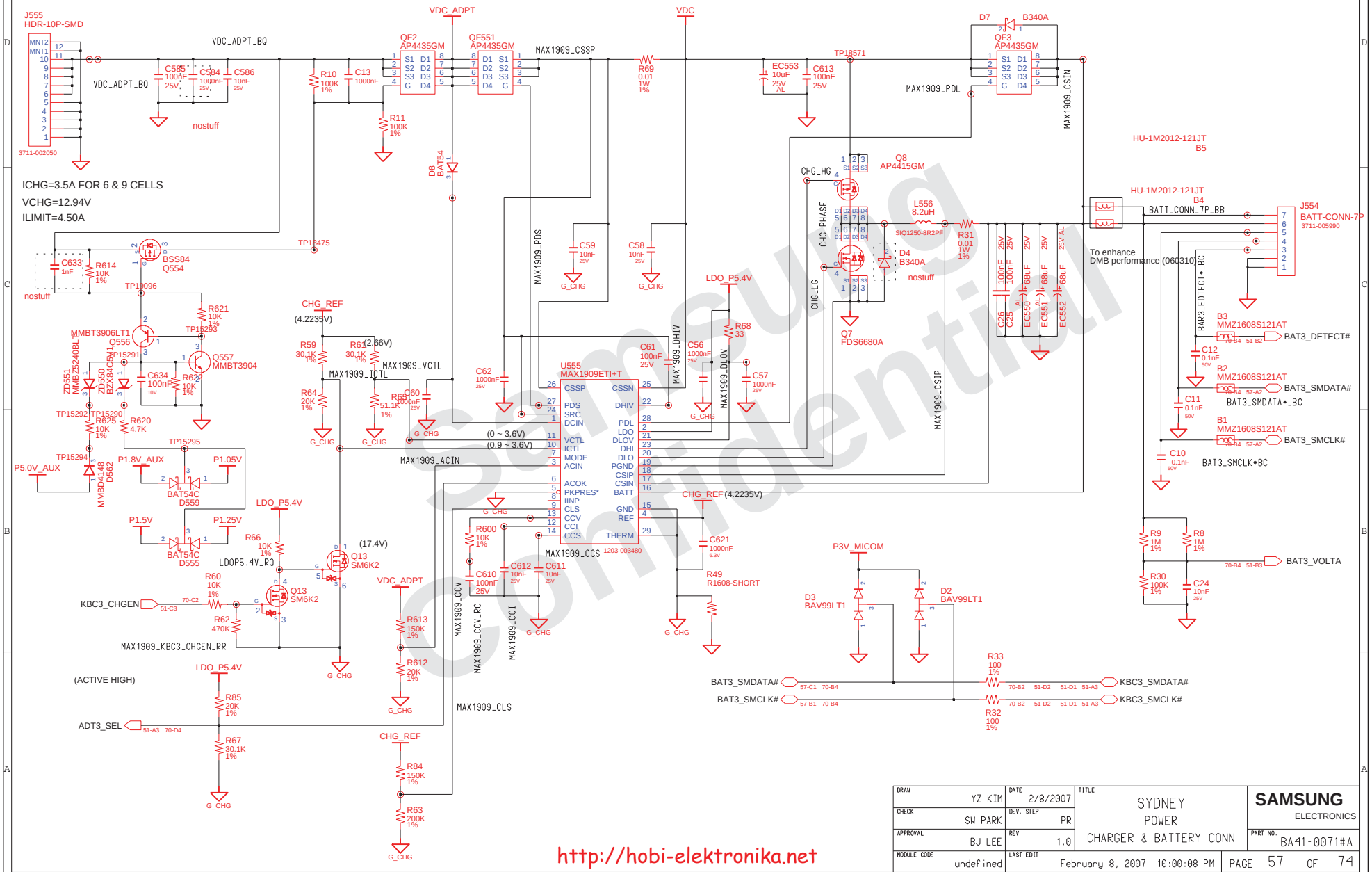

DRAW: YZ KIM	DATE: 2/8/2007	TITLE: SYDNEY POWER CHARGER & BATTERY CONN	SAMSUNG ELECTRONICS
CHECK: SW PARK	DEV. STEP: PR		PART NO. BA41-0071#A
APPROVAL: BJ LEE	REV: 1.0		
MODULE CODE: undefined	LAST EDIT: February 8, 2007 10:00:08 PM		PAGE 57 OF 74

http://hobi-elektronika.net

Samsung Confidential

SAMSUNG PROPRIETARY
THIS DOCUMENT CONTAINS CONFIDENTIAL PROPRIETARY INFORMATION THAT IS SAMSUNG ELECTRONICS CO'S PROPERTY. DO NOT DISCLOSE TO OR DUPLICATE FOR OTHERS EXCEPT AS AUTHORIZED BY SAMSUNG.

P3.3V_AUX & P5.0V_AUX

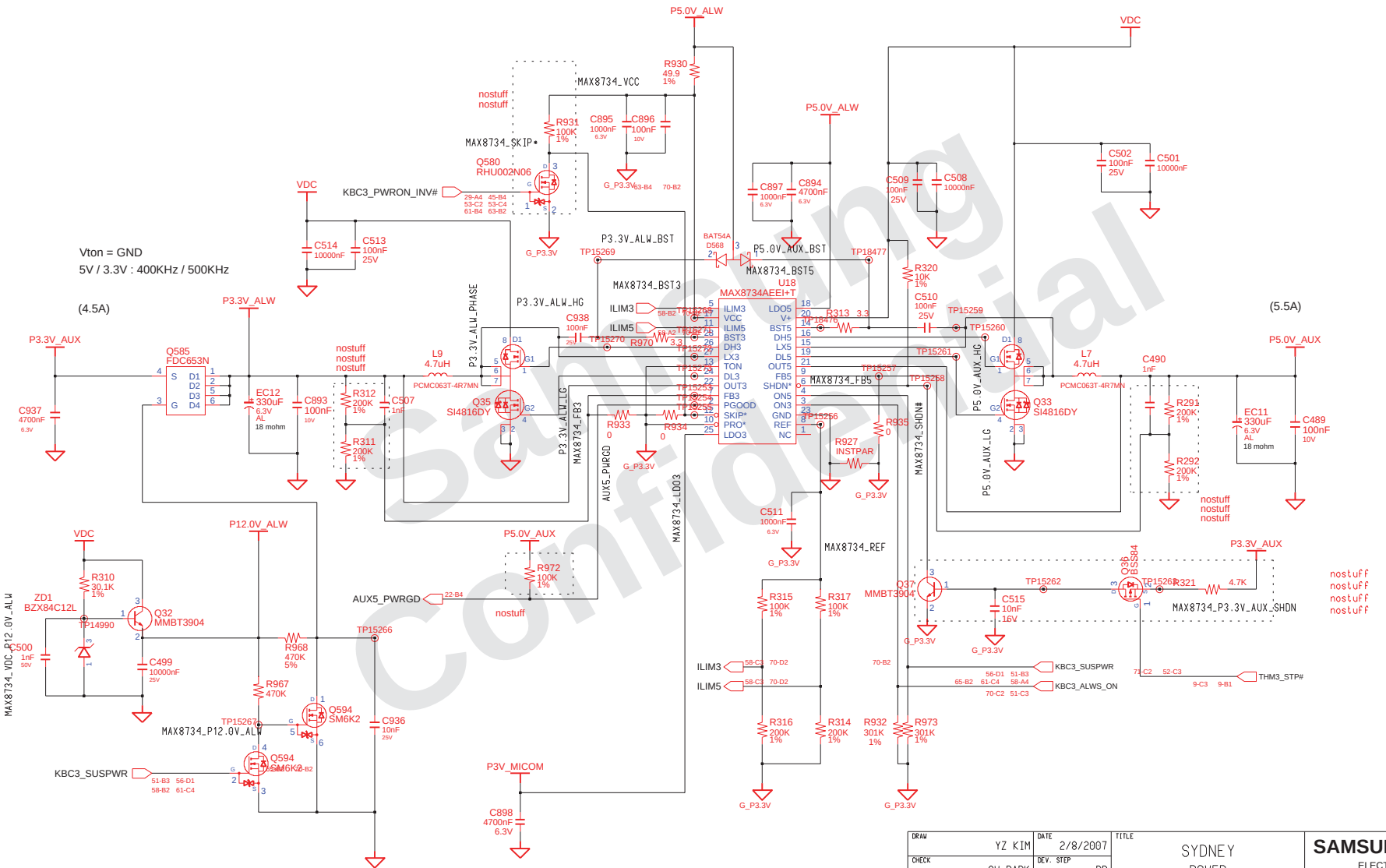

DRAW: YZ KIM	DATE: 2/8/2007	TITLE: SYDNEY POWER ALWS/AUX POWER	SAMSUNG ELECTRONICS
CHECK: SW PARK	DEV. STEP: PR		PART NO. BA41-0071#A
APPROVAL: BJ LEE	REV: 1.0		
MODULE CODE: undefined	LAST EDIT: February 8, 2007 10:00:08 PM		PAGE 58 OF 74

SAMSUNG PROPRIETARY
THIS DOCUMENT CONTAINS CONFIDENTIAL PROPRIETARY INFORMATION THAT IS SAMSUNG ELECTRONICS CO'S PROPERTY. DO NOT DISCLOSE TO OR DUPLICATE FOR OTHERS EXCEPT AS AUTHORIZED BY SAMSUNG.

CPU VRM [SEMTECH]

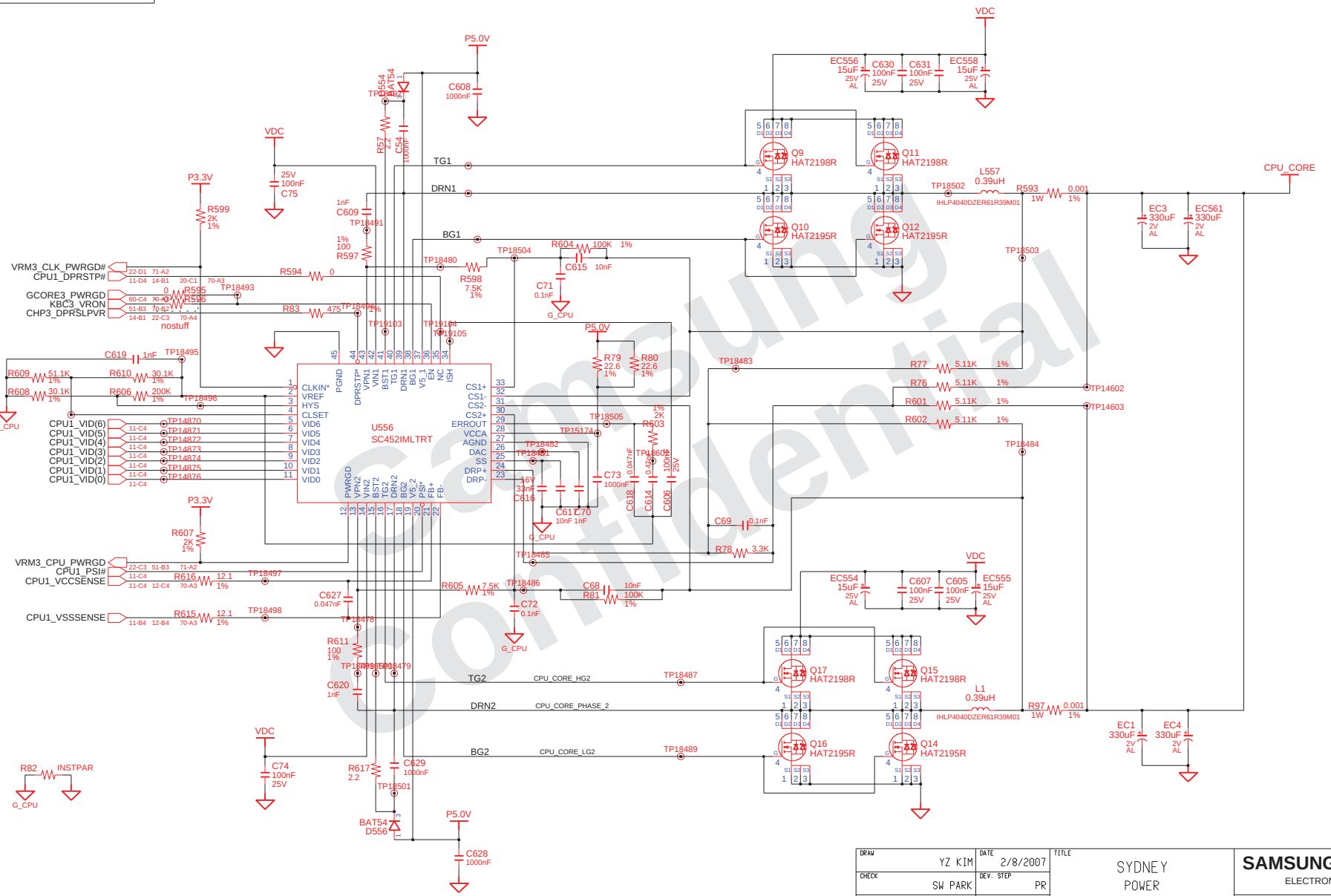

Samsung Confidential

http://hobi-elektronika.net

DRAW: YZ KIM	DATE: 2/8/2007	TITLE: SYDNEY POWER CPUI VRM (IMVP6+)	SAMSUNG ELECTRONICS
CHECK: SW PARK	DEV. STEP: PR		PART NO. BA41-0071#A
APPROVAL: BJ LEE	REV: 1.0		
MODULE CODE: undefined	LAST EDIT: February 8, 2007 10:00:08 PM		PAGE 59 OF 74

SAMSUNG PROPRIETARY
THIS DOCUMENT CONTAINS CONFIDENTIAL
PROPRIETARY INFORMATION THAT IS
SAMSUNG ELECTRONICS CO'S PROPERTY.
DO NOT DISCLOSE TO OR DUPLICATE FOR OTHERS
EXCEPT AS AUTHORIZED BY SAMSUNG.

GFX CORE [SEMTECH]

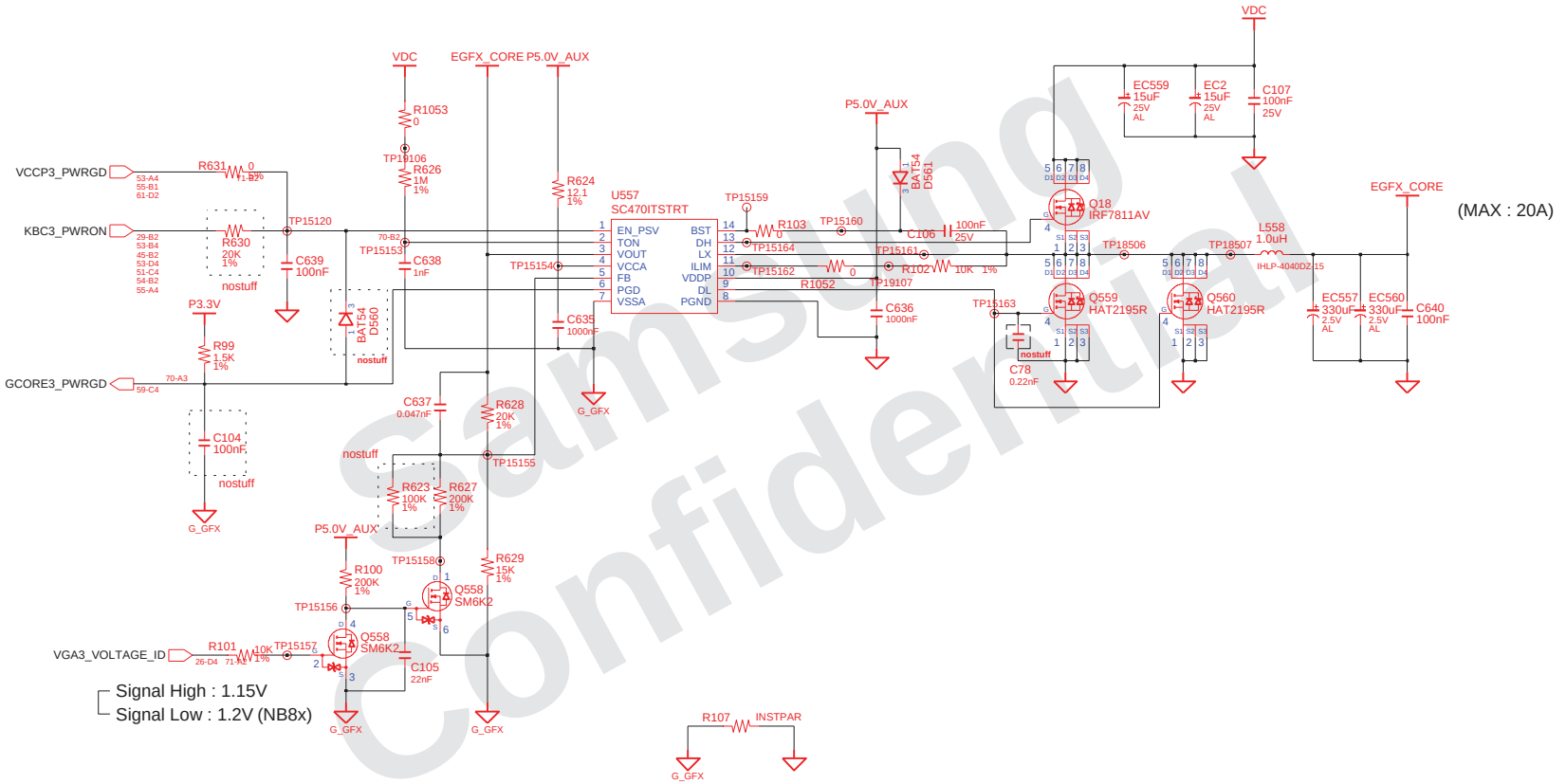

Samsung Confidential

http://hobi-elektronika.net

DRAW YZ KIM	DATE 2/8/2007	TITLE SYDNEY POWER GFX CORE VRM	SAMSUNG ELECTRONICS	
CHECK SW PARK	DEV. STEP PR		PART NO. BA41-0071#A	
APPROVAL BJ LEE	REV 1.0			
MODULE CODE undefined	LAST EDIT February 8, 2007 10:00:08 PM		PAGE 60 OF 74	

SAMSUNG PROPRIETARY
THIS DOCUMENT CONTAINS CONFIDENTIAL PROPRIETARY INFORMATION THAT IS SAMSUNG ELECTRONICS CO'S PROPERTY. DO NOT DISCLOSE TO OR DUPLICATE FOR OTHERS EXCEPT AS AUTHORIZED BY SAMSUNG.

P2.5V POWER (After DV will be removed)

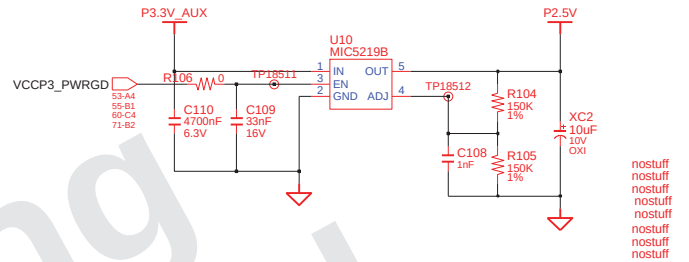

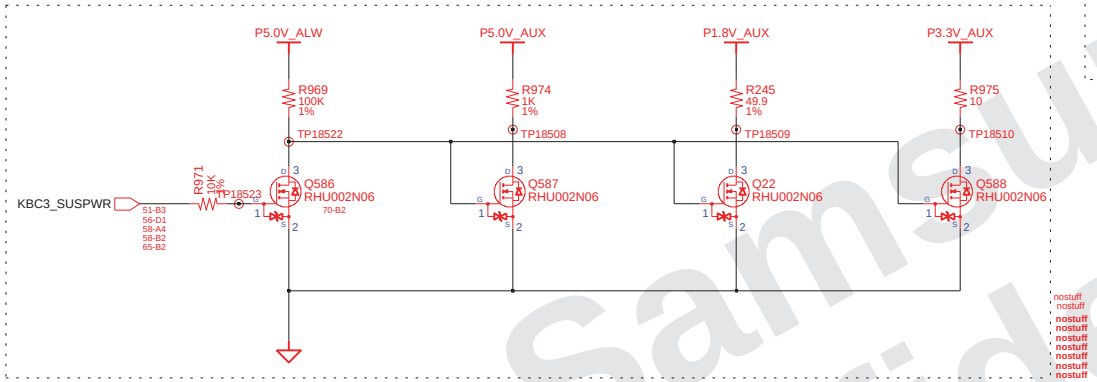

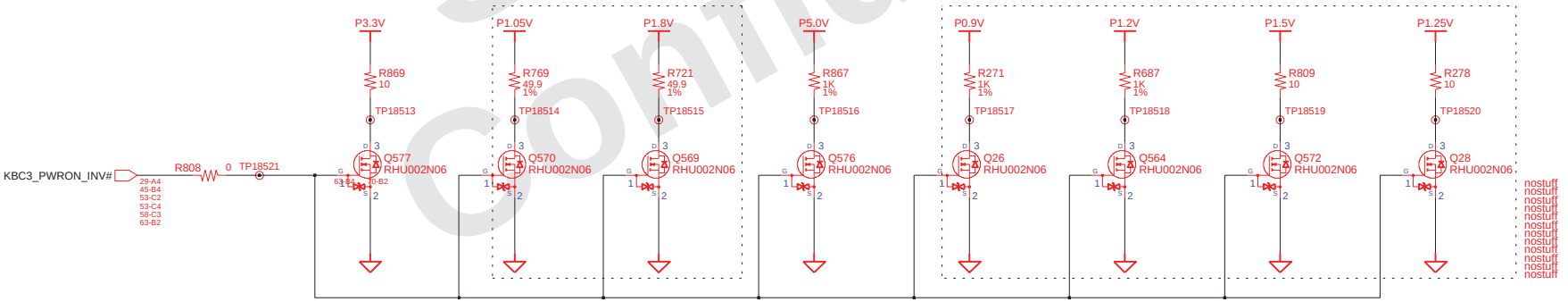

Samsung Confidential

http://hobi-elektronika.net

DRAW: YZ KIM	DATE: 2/8/2007	TITLE: SYDNEY POWER P2.5V	SAMSUNG ELECTRONICS
CHECK: SW PARK	DEV. STEP: PR		PART NO. BA41-0071#A
APPROVAL: BJ LEE	REV: 1.0		
MODULE CODE: undefined	LAST EDIT: February 8, 2007 10:00:08 PM		PAGE 61 OF 74

SAMSUNG PROPRIETARY
THIS DOCUMENT CONTAINS CONFIDENTIAL PROPRIETARY INFORMATION THAT IS SAMSUNG ELECTRONICS CO'S PROPERTY. DO NOT DISCLOSE TO OR DUPLICATE FOR OTHERS EXCEPT AS AUTHORIZED BY SAMSUNG.

HDD connector

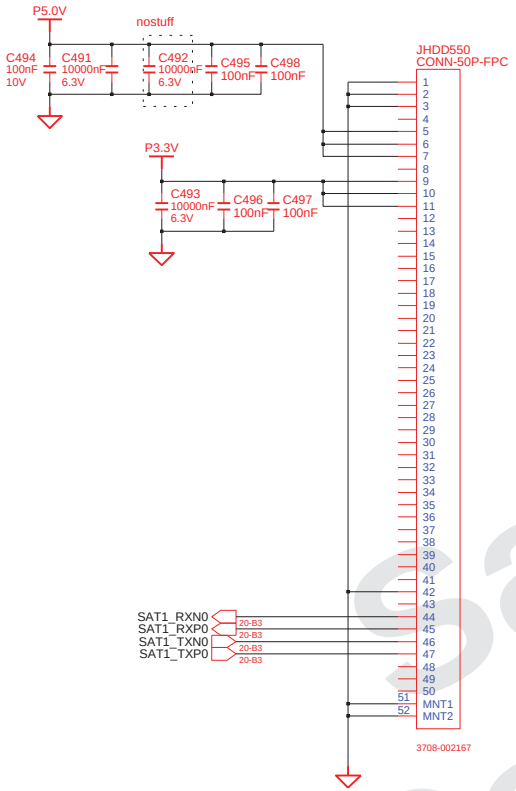

ODD connector

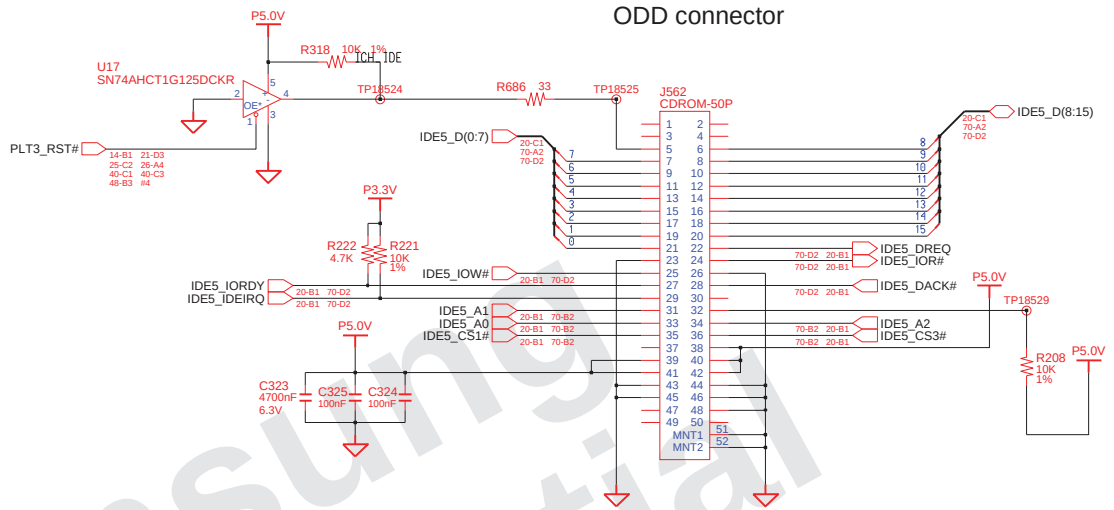

REMOTE CONTROL

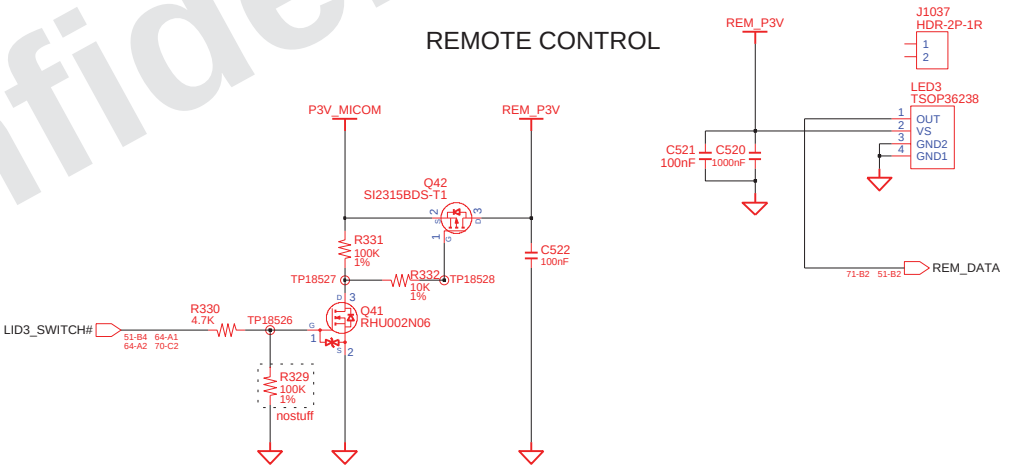

Samsung Confidential

http://hobi-elektronika.net

DRAW: YZ KIM	DATE: 2/8/2007	TITLE: SYDNEY CONNECTOR HDD / ODD / REMOCON	SAMSUNG ELECTRONICS
CHECK: SW PARK	DEV. STEP: PR		PART NO. BA41-0071#A
APPROVAL: BJ LEE	REV: 1.0		
MODULE CODE	LAST EDIT: February 8, 2007 10:00:08 PM	PAGE 62 OF 74	

SAMSUNG PROPRIETARY
THIS DOCUMENT CONTAINS CONFIDENTIAL PROPRIETARY INFORMATION THAT IS SAMSUNG ELECTRONICS CO'S PROPERTY. DO NOT DISCLOSE TO OR DUPLICATE FOR OTHERS EXCEPT AS AUTHORIZED BY SAMSUNG.

MDC Connecter

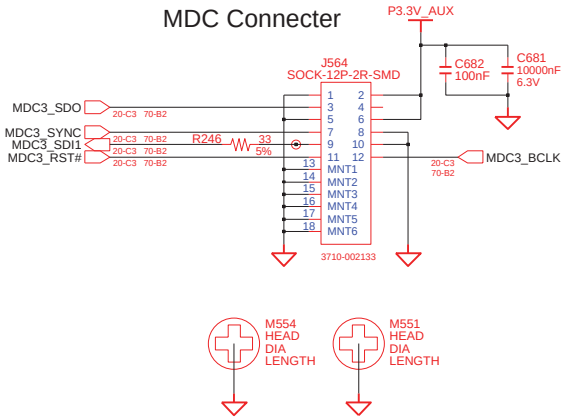

TO TPM BOARD

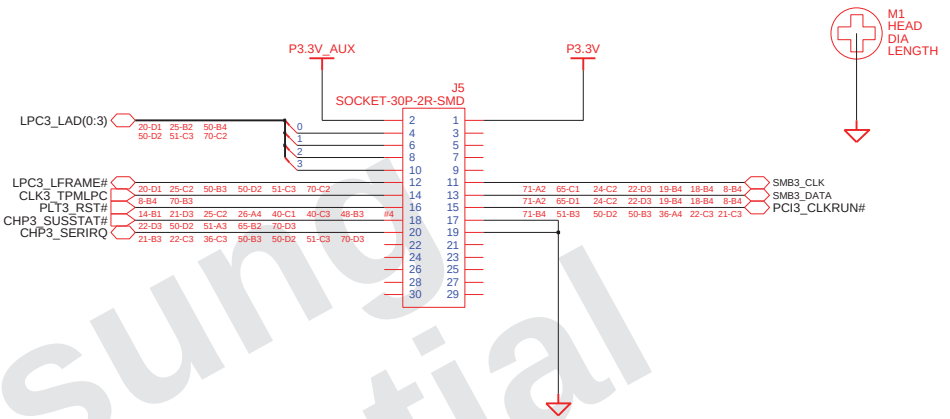

USB0,1 Connector

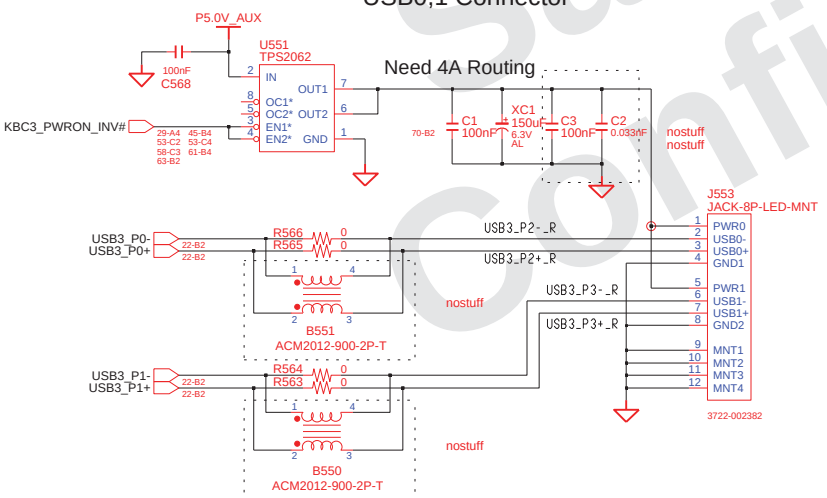

TO USB BOARD

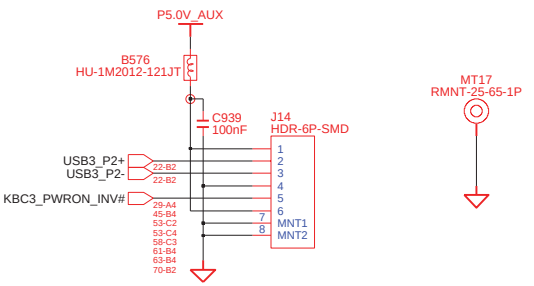

Samsung Confidential

http://hobi-elektronika.net

DRAW YZ KIM	DATE 2/8/2007	TITLE SYDNEY CONNECTOR	SAMSUNG ELECTRONICS
CHECK SW PARK	DEV. STEP PR		
APPROVAL BJ LEE	REV 1.0	TPM/USB/BLUETOOTH/MDC CONN	PART NO. BA41-0071#A
MODULE CODE undefined	LAST EDIT February 8, 2007 10:00:08 PM		PAGE 63 OF 74

SAMSUNG PROPRIETARY
THIS DOCUMENT CONTAINS CONFIDENTIAL PROPRIETARY INFORMATION THAT IS SAMSUNG ELECTRONICS CO'S PROPERTY. DO NOT DISCLOSE TO OR DUPLICATE FOR OTHERS EXCEPT AS AUTHORIZED BY SAMSUNG.

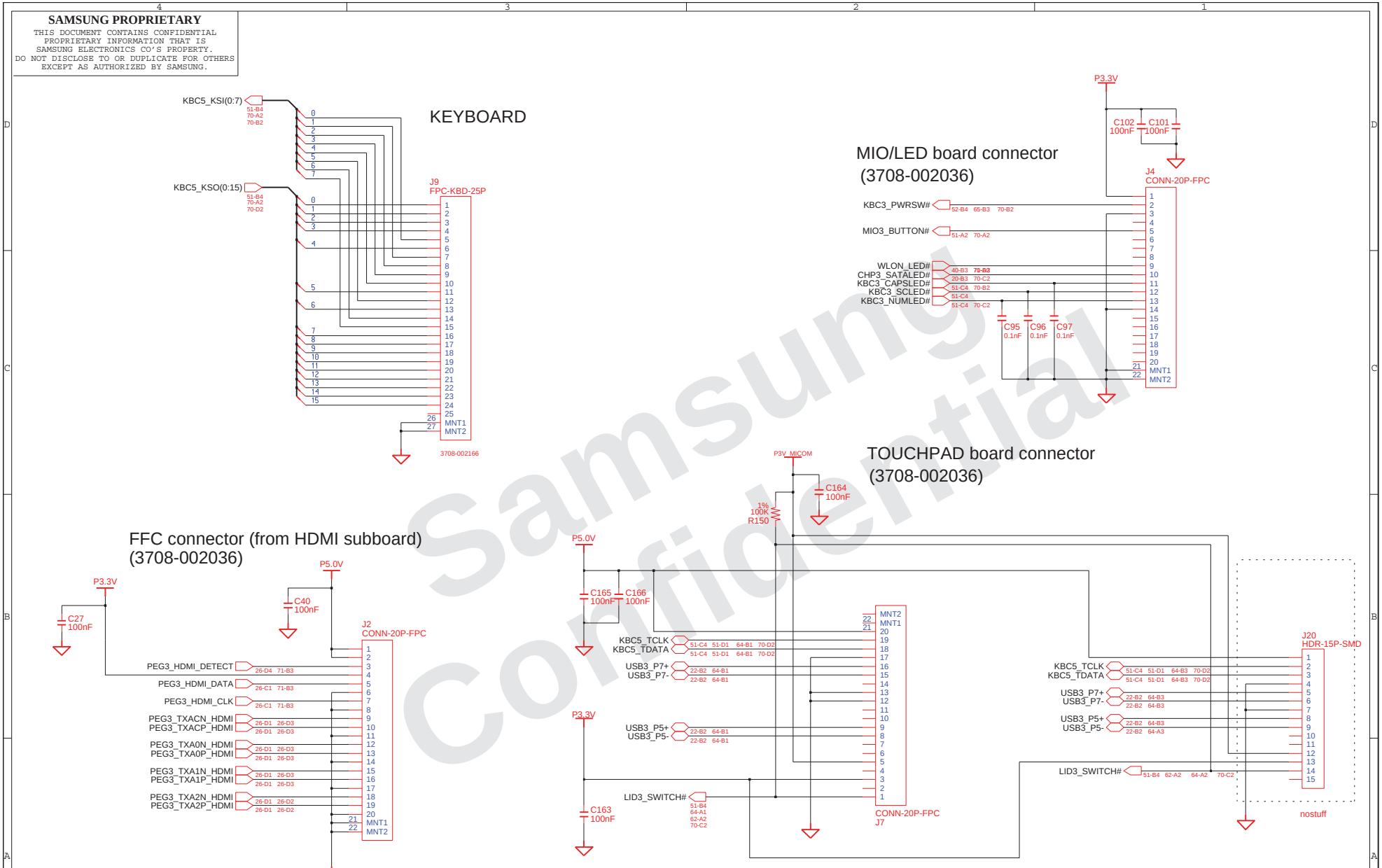

Samsung Confidential

http://hobi-elektronika.net

DRAW YZ KIM	DATE 2/8/2007	TITLE SYDNEY CONNECTOR I/F CONN ON MAINBOARD	SAMSUNG ELECTRONICS
CHECK SW PARK	DEV. STEP PR		PART NO. BA41-0071#A
APPROVAL BJ LEE	REV 1.0		
MODULE CODE	LAST EDIT February 8, 2007 10:00:08 PM		PAGE 64 OF 74

SAMSUNG PROPRIETARY
THIS DOCUMENT CONTAINS CONFIDENTIAL PROPRIETARY INFORMATION THAT IS SAMSUNG ELECTRONICS CO'S PROPERTY. DO NOT DISCLOSE TO OR DUPLICATE FOR OTHERS EXCEPT AS AUTHORIZED BY SAMSUNG.

DOCKING CONNECTOR (130PIN)

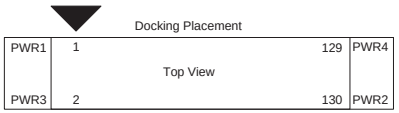

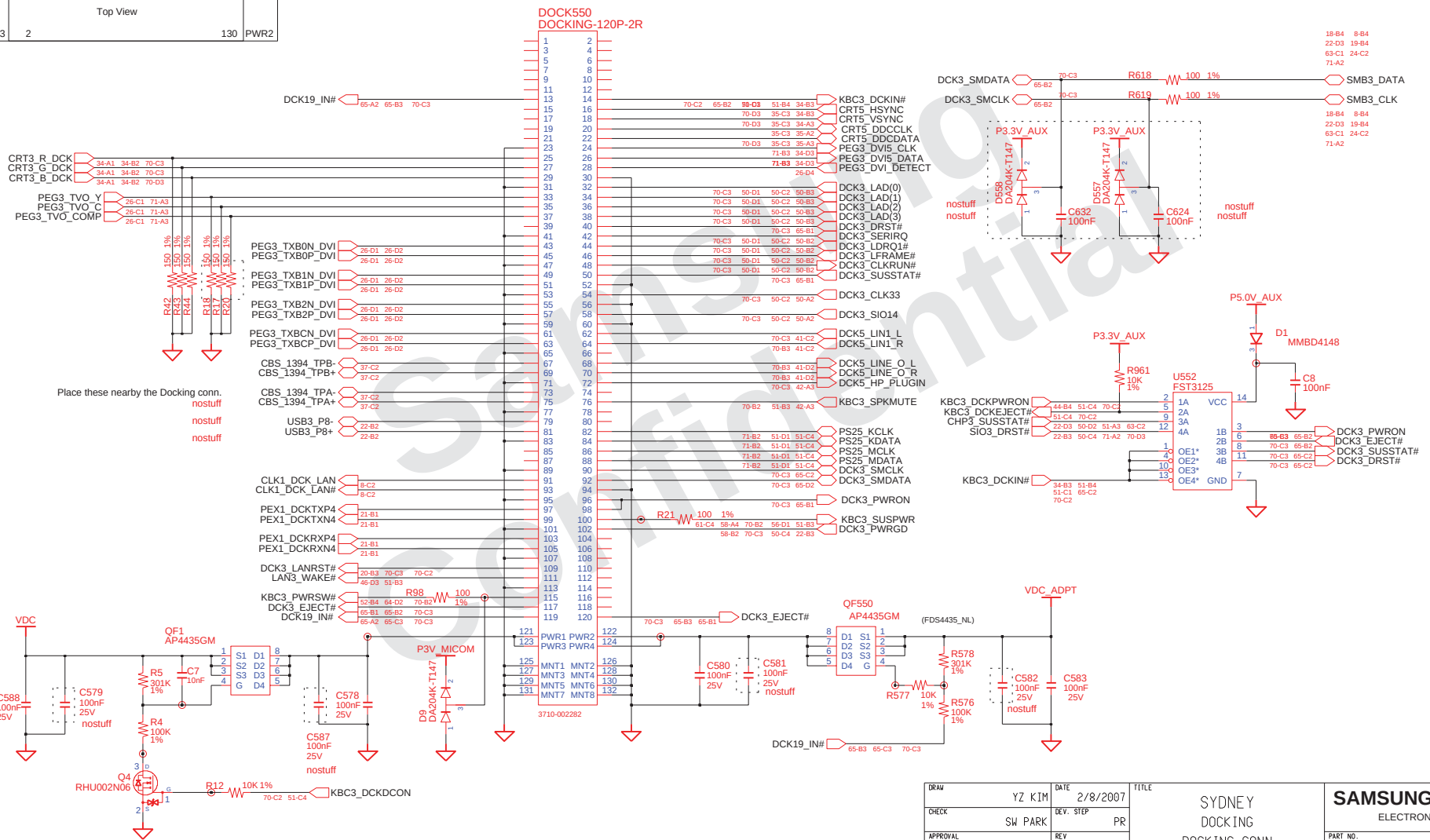

Samsung Confidential

http://hobi-elektronika.net

DRAW: YZ KIM	DATE: 2/8/2007	TITLE: SYDNEY DOCKING DOCKING CONN	SAMSUNG ELECTRONICS
CHECK: SW PARK	DEV. STEP: PR		PART NO. BA41-0071#A
APPROVAL: BJ LEE	REV: 1.0		
MODULE CODE: undefined	LAST EDIT: February 8, 2007 10:00:08 PM		PAGE 65 OF 74

SAMSUNG PROPRIETARY
THIS DOCUMENT CONTAINS CONFIDENTIAL PROPRIETARY INFORMATION THAT IS SAMSUNG ELECTRONICS CO'S PROPERTY. DO NOT DISCLOSE TO OR DUPLICATE FOR OTHERS EXCEPT AS AUTHORIZED BY SAMSUNG.

Sub Board

(TPM, USB sub board)

TPM BOARD

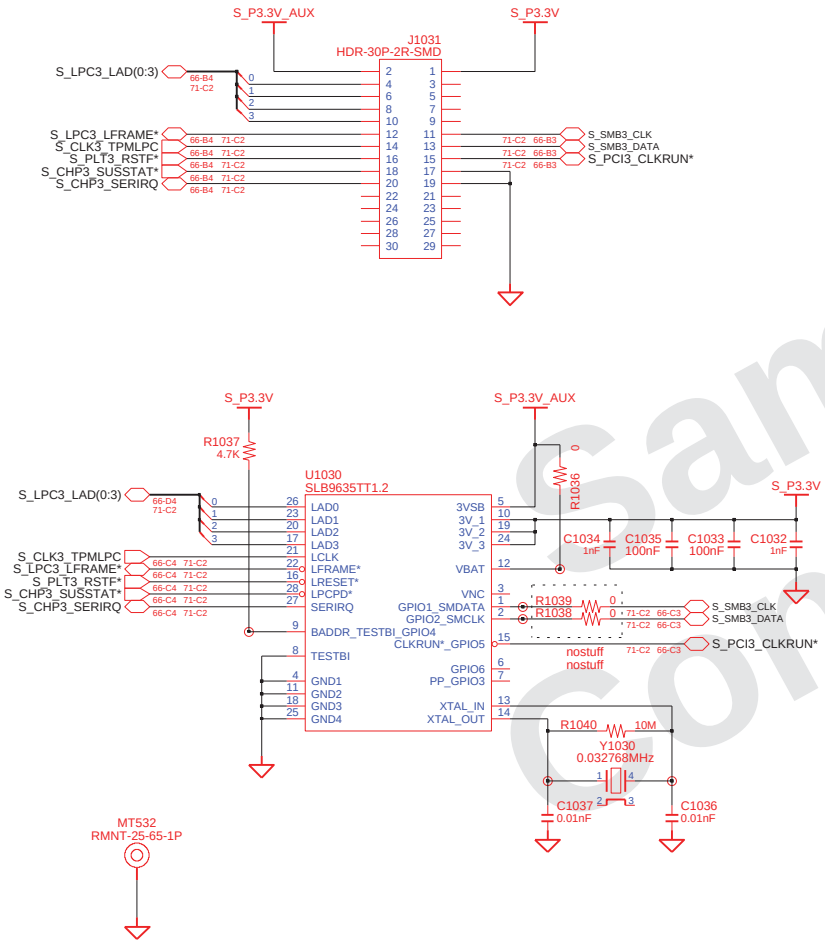

USB BOARD

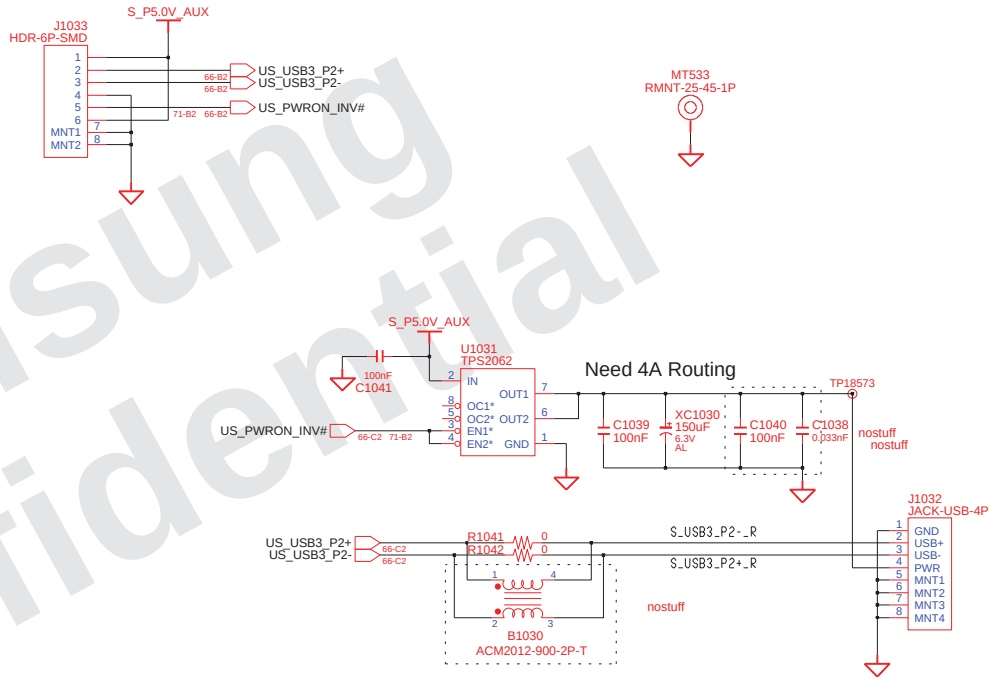

Samsung Confidential

http://hobi-elektronika.net

DRAW YZ KIM	DATE 2/8/2007	TITLE SYDNEY SUB BOARD TPM/USB BOARD	SAMSUNG ELECTRONICS
CHECK SW PARK	DEV. STEP PR		PART NO. BA41-0071#A
APPROVAL BJ LEE	REV 1.0		
MODULE CODE	LAST EDIT February 8, 2007 10:00:08 PM		PAGE 66 OF 74

SAMSUNG PROPRIETARY
THIS DOCUMENT CONTAINS CONFIDENTIAL PROPRIETARY INFORMATION THAT IS SAMSUNG ELECTRONICS CO'S PROPERTY. DO NOT DISCLOSE TO OR DUPLICATE FOR OTHERS EXCEPT AS AUTHORIZED BY SAMSUNG.

Sub Board

(HDMI sub board)

HDMI connector

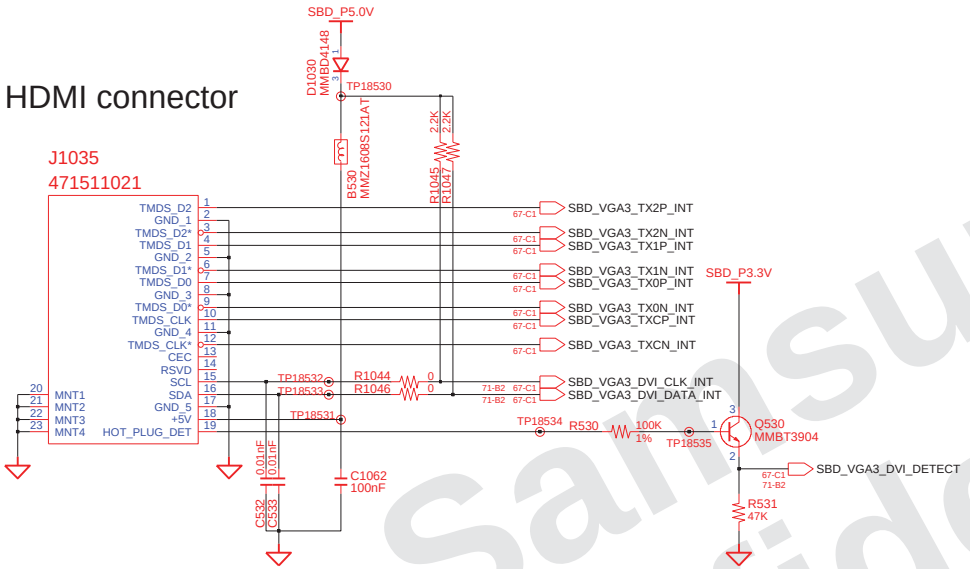

FFC connector

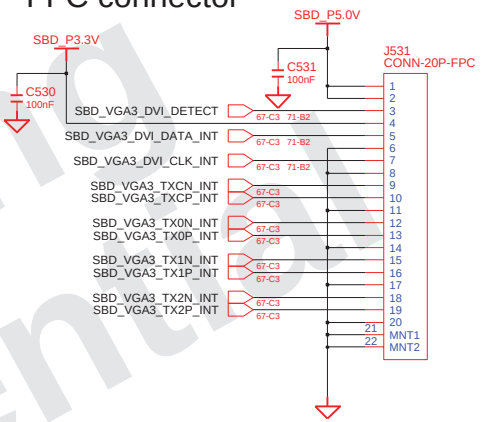

AD-DC

Adapter power -> AD_DC

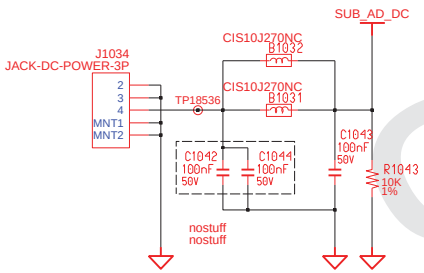

DC-in connector

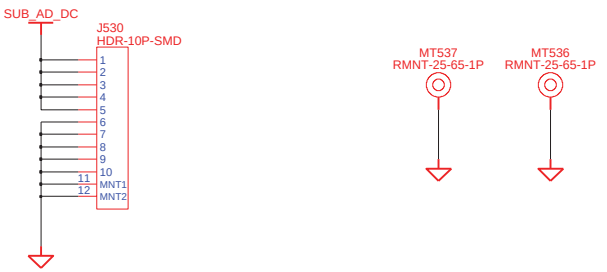

Samsung Confidential

http://hobi-elektronika.net

DRAW YZ KIM	DATE 2/8/2007	TITLE SYDNEY SUB BOARD HDMI BOARD	SAMSUNG ELECTRONICS
CHECK SW PARK	DEV. STEP PR		PART NO. BA41-0071#A
APPROVAL BJ LEE	REV 1.0		
MODULE CODE	LAST EDIT February 8, 2007 10:00:08 PM		PAGE 67 OF 74

SAMSUNG PROPRIETARY

THIS DOCUMENT CONTAINS CONFIDENTIAL
PROPRIETARY INFORMATION THAT IS
SAMSUNG ELECTRONICS CO'S PROPERTY.
DO NOT DISCLOSE TO OR DUPLICATE FOR OTHERS
EXCEPT AS AUTHORIZED BY SAMSUNG.

Samsung Confidential

http://hobi-elektronika.net

DRAW: YZ KIM	DATE: 2/8/2007	TITLE: SYDNEY SUBBOARD ONTOP BOARD	SAMSUNG ELECTRONICS
CHECK: SW PARK	DEV. STEP: PR		
APPROVAL: BJ LEE	REV: 1.0		PART NO. BA41-0071#A
MODULE CODE: undefined	LAST EDIT: February 8, 2007 10:00:08 PM		PAGE 68 OF 74

SAMSUNG PROPRIETARY
THIS DOCUMENT CONTAINS CONFIDENTIAL
PROPRIETARY INFORMATION THAT IS
SAMSUNG ELECTRONICS CO'S PROPERTY.
DO NOT DISCLOSE TO OR DUPLICATE FOR OTHERS
EXCEPT AS AUTHORIZED BY SAMSUNG.

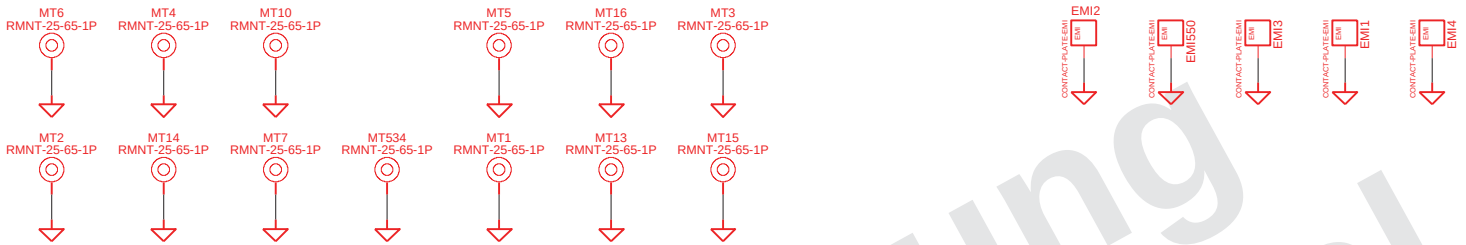

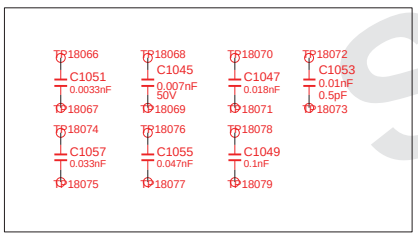

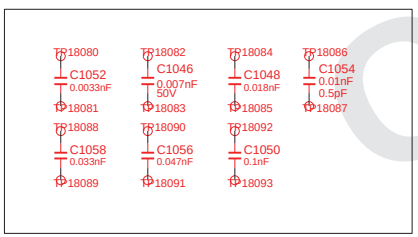

Samsung Confidential

http://hobi-elektronika.net

DRAW YZ KIM	DATE 2/8/2007	TITLE SYDNEY MOUNT HOLE	SAMSUNG ELECTRONICS
CHECK SW PARK	DEV. STEP PR		PART NO. BA41-0071#A
APPROVAL BJ LEE	REV 1.0		
MODULE CODE	LAST EDIT February 8, 2007 10:00:08 PM	PAGE 69 OF 74	

SAMSUNG PROPRIETARY
THIS DOCUMENT CONTAINS CONFIDENTIAL PROPRIETARY INFORMATION THAT IS SAMSUNG ELECTRONICS CO'S PROPERTY. DO NOT DISCLOSE TO OR DUPLICATE FOR OTHERS EXCEPT AS AUTHORIZED BY SAMSUNG.

TP15904 ADT3_SEL
TP15905 AUD3_BCLK
TP15906 AUD3_BEEP
TP15908 AUD3_GPIO0#
TP15909 AUD3_GPIO1#
TP15910 AUD3_RST#
TP15911 AUD3_SDI0
TP15913 AUD3_SDO
TP15916 AUD3_SPKR
TP15917 AUD3_SYNC
TP15918 AUD5_HP_0_L
TP15922 AUD5_HP_0_R
TP15928 AUD5_LINE_0_L
TP15930 AUD5_LINE_0_R
TP15932 AUD5_MIC1_L
TP15935 AUD5_MIC1_R
TP15874 AUD5_MIC1_VREF_L
TP15875 AUD5_MIC1_VREF_R
TP15877 AUD5_MIC2_L
TP15879 AUD5_MIC2_R
TP15884 AUD5_MIC2_VREF
TP15886 AUD5_SENS_A
TP15887 AUD5_SENS_B
TP15888 AUD5_SENS_HP#
TP15890 AUD5_SENS_LINEIN#
TP15891 AUD5_SENS_MIC#
TP15892 AUD5_SHDN#
TP15897 BAT3_DETECT#
TP15898 BAT3_SMCLK#
TP15899 BAT3_SMDATA#
TP15900 BAT3_VOLTA
TP15901 CBS3_A_A_18
TP15902 CBS3_A_A_19
TP15903 CBS3_A_D_14
TP15840 CBS3_A_D_2
TP15841 CBS3_CAD(0)
TP15842 CBS3_CAD(1)
TP15843 CBS3_CAD(10)
TP15844 CBS3_CAD(11)
TP15845 CBS3_CAD(12)
TP15846 CBS3_CAD(13)
TP15847 CBS3_CAD(14)
TP15848 CBS3_CAD(15)
TP15849 CBS3_CAD(16)
TP15850 CBS3_CAD(17)
TP15851 CBS3_CAD(18)
TP15852 CBS3_CAD(19)
TP15853 CBS3_CAD(2)
TP15854 CBS3_CAD(20)
TP15855 CBS3_CAD(21)

TP15856 CBS3_CAD(22)
TP15857 CBS3_CAD(23)
TP15858 CBS3_CAD(24)
TP15859 CBS3_CAD(25)
TP15860 CBS3_CAD(26)
TP15861 CBS3_CAD(27)
TP15862 CBS3_CAD(28)
TP15863 CBS3_CAD(29)
TP15864 CBS3_CAD(3)
TP15865 CBS3_CAD(30)
TP15866 CBS3_CAD(31)
TP15867 CBS3_CAD(4)
TP15868 CBS3_CAD(5)
TP15869 CBS3_CAD(6)
TP15870 CBS3_CAD(7)
TP15871 CBS3_CAD(8)
TP15808 CBS3_CAD(9)
TP15809 CBS3_CAUDIO
TP15810 CBS3_CCBE0#
TP15811 CBS3_CCBE1#
TP15812 CBS3_CCBE2#
TP15813 CBS3_CCBE3#
TP15814 CBS3_CCD1#
TP15815 CBS3_CCD2#
TP15816 CBS3_CCLK
TP15817 CBS3_CCLKRUN#
TP15818 CBS3_CDEVSEL#
TP15819 CBS3_CFRAME#
TP15820 CBS3_CGNT#
TP15821 CBS3_CINT#
TP15822 CBS3_CIRDY#
TP15823 CBS3_CPAR
TP15824 CBS3_CPERR#
TP15825 CBS3_CREQ#
TP15826 CBS3_CRST#
TP15827 CBS3_CSERR#
TP15828 CBS3_CSTOP#
TP15829 CBS3_CSTSCHG
TP15830 CBS3_CTRDY#
TP15831 CBS3_CVS1
TP15832 CBS3_CVS2
TP15833 CBS3_MD_CLK
TP15834 CBS3_MD_DATA0_MS_SDIO
TP15835 CBS3_MD_DATA1
TP15836 CBS3_MD_DATA2
TP15837 CBS3_MD_DATA3
TP15838 CBS3_MD_DATA4_XD
TP15839 CBS3_MD_DATA5_XD
TP15776 CBS3_MD_DATA6_XD
TP15777 CBS3_MD_DATA7_XD
TP15778 CBS3_MD_VCCEN
TP15779 CBS3_MD_XD_ALE
TP15780 CBS3_MD_XD_CE#
TP15781 CBS3_MD_XD_CLE
TP15782 CBS3_MD_XD_WP#
TP15783 CBS3_MS_BS_SD_CMD
TP15784 CBS3_MS_INS_XD_CD#
TP15785 CBS3_SD_CD_XD_CD#
TP18576 CBS3_SD_WP_XD_R_B#
TP15787 CBS3_VCC3EN#
TP15788 CBS3_VCC5EN#
TP15789 CBS3_VPPEN0
TP15790 CBS3_VPPEN1

TP15796 CHP3_1394_ROMW#
TP15797 CHP3_BIOSWP#
TP15798 CHP3_BIOS_CRI#
TP15799 CHP3_CL_CLK_0
TP15800 CHP3_CL_DATA_0
TP15801 CHP3_CL_RST#_0
TP15802 CHP3_CL_RST#_1
TP15803 CHP3_CPUSTP#
TP15805 CHP3_DCKEN#
TP15806 CHP3_DCKIN#
TP15807 CHP3_DPRSLPVR

TP15745 CHP3_INTRUDER#
TP15746 CHP3_INTVRMEN
TP15747 CHP3_LAN100_SLP
TP15748 CHP3_LDRQ0#
TP15749 CHP3_LDRQ1#
TP15750 CHP3_PCISTP#
TP15752 CHP3_RTCRST#
TP15753 CHP3_SATACLKREQ#
TP15754 CHP3_SATALED#
TP15755 CHP3_SERIRQ
TP15756 CHP3_SLPS4#
TP15757 CHP3_SLPS5#
TP15758 CHP3_SUSSTAT#

TP15734 CLK3_DBGLPC
TP15735 CLK3_FM48
TP15736 CLK3_GFX_27M
TP15737 CLK3_GFX_27M_SS
TP15738 CLK3_ICH14
TP15743 CLK3_PCLKCB
TP15680 CLK3_PCLKICH
TP15681 CLK3_PCLKMICOM
TP15682 CLK3_PCLKSIO
TP15683 CLK3_PCLKSIO_DS
TP15684 CLK3_PWRGD
TP15685 CLK3_SIO14
TP15686 CLK3_TPMLPC
TP15687 CLK3_USB48
TP15673 CPU1_CPURST#
TP15534 CPU1_VCCSENSE
TP15535 CPU1_VSSSENSE
TP19097 CPU1_PWRGDCPU
TP19098 CPU1_TCK
TP19099 CPU1_TDI
TP19100 CPU1_TMS
TP19101 CPU1_THRMTRIP#
TP19129 CPU1_BSEL0
TP19130 CPU1_BSEL1
TP19131 CPU1_BSEL2
TP19132 CPU1_DPRSTP#
TP19133 CPU1_FERR#

TP18582 CRT5_HSYNC
TP18583 CRT5_VSYNC
TP18580 CRT5_DDCCLK
TP18581 CRT5_DDCDATA
TP18577 CRT3_B_SYS
TP18578 CRT3_G_SYS
TP18579 CRT3_R_SYS
TP15536 CPU2_THERMDA
TP15537 CPU2_THERMDC
TP15538 CPU3_THRMTRIP#
TP15542 CRT3_B_DCK
TP15543 CRT3_G_DCK
TP15544 CRT3_R_DCK
TP15545 CSB3_SPKR
TP15546 DCK19_IN#
TP15548 DCK3_CLK33
TP15549 DCK3_CLKRUN#
TP15551 DCK3_DRST#
TP15488 DCK3_EJECT#
TP15489 DCK3_LAD(0)
TP15490 DCK3_LAD(1)
TP15491 DCK3_LAD(2)
TP15492 DCK3_LAD(3)
TP15493 DCK3_LANRST#
TP15494 DCK3_LDRQ1#
TP15495 DCK3_LFRAME#
TP15496 DCK3_PWRGD
TP15497 DCK3_PWRON
TP15498 DCK3_SERIRQ
TP15499 DCK3_SIO14
TP15500 DCK3_SMCLK
TP15501 DCK3_SMDATA
TP15502 DCK3_SUSSTAT#
TP15504 DCK5_HP_PLUGIN
TP15505 DCK5_LIN1_L
TP15507 DCK5_LIN1_R
TP15509 DCK5_LINE_0_L
TP15510 DCK5_LINE_0_R
TP15467 DMI3_SPDIF_OUT
TP15472 FAN3_FDBACK#
TP15473 FAN5_VDD
TP15474 GCORE3_PWRGD
TP15475 GFX3_HCLK
TP15476 GFX3_HDATA
TP15477 GFX3_THRM#

TP18860 GMEM1_RSTA#
TP18861 GMEM1_RSTC#
TP18864 IDE5_A0
TP18828 IDE5_A1
TP18829 IDE5_A2
TP18830 IDE5_CS1#
TP18831 IDE5_CS3#
TP18832 IDE5_D(0)
TP18833 IDE5_D(1)
TP18834 IDE5_D(10)
TP18835 IDE5_D(11)
TP18836 IDE5_D(12)
TP18837 IDE5_D(13)
TP18838 IDE5_D(14)
TP18839 IDE5_D(15)

TP18840 IDE5_D(2)
TP18841 IDE5_D(3)
TP18842 IDE5_D(4)
TP18843 IDE5_D(5)
TP18844 IDE5_D(6)
TP18845 IDE5_D(7)
TP18846 IDE5_D(8)
TP18847 IDE5_D(9)
TP18848 IDE5_DACK#
TP18849 IDE5_DREQ
TP18850 IDE5_IDEIRQ
TP18851 IDE5_IOR#
TP18852 IDE5_IORDY
TP18853 IDE5_IOW#
TP18854 ILIM3
TP18855 ILIM5
TP18856 ITP3_DBRESET#
TP18723 KBC3_ALWS_ON
TP18857 KBC3_A20G
TP18858 KBC3_BKLTON
TP18859 KBC3_BLCKPWRSW#
TP18796 KBC3_CAPSLED#
TP18797 KBC3_CHGEN
TP18798 KBC3_CHKPWRSW#
TP18799 KBC3_CPURST#
TP18800 KBC3_DCKDCON
TP18801 KBC3_DCKEJECT#
TP18802 KBC3_DCKIN#
TP18803 KBC3_DCKPWRON
TP18805 KBC3_EXTSMI#
TP18806 KBC3_LANLOWPWR#
TP18807 KBC3_LANPWRON#
TP18809 KBC3_LAN_RST#
TP18810 KBC3_LED_ACIN#
TP18811 KBC3_LED_CHARGE#
TP18812 KBC3_LED_POWER#
TP18818 KBC3_NUMLED#
TP18819 KBC3_PWRBTN#
TP18820 KBC3_PWRGD
TP18821 KBC3_PWRON
TP18822 KBC3_PWRON_INV#
TP18826 KBC3_RFOFF#
TP18827 KBC3_ROM_WP#
TP18764 KBC3_RSMRST#
TP18724 KBC3_PWRSW#
TP18765 KBC3_RSI#
TP18725 KBC3_SUSPWR
TP18766 KBC3_RUNSCI#
TP18767 KBC3_SCLED#
TP18768 KBC3_SMCLK#
TP18769 KBC3_SMDATA#
TP18770 KBC3_SPKMUTE
TP18774 KBC3_THERM_SMCLK
TP18775 KBC3_THERM_SMDATA
TP18776 KBC3_VRON
TP18777 KBC3_WAKESCI#
TP18779 KBC5_KSI(0)
TP18780 KBC5_KSI(1)
TP18781 KBC5_KSI(2)
TP18782 KBC5_KSI(3)
TP18783 KBC5_KSI(4)
TP18784 KBC5_KSI(5)
TP18785 KBC5_KSI(6)
TP18786 KBC5_KSI(7)
TP18787 KBC5_KSO(0)
TP18788 KBC5_KSO(1)

TP18789 KBC5_KSO(10)
TP18790 KBC5_KSO(11)
TP18791 KBC5_KSO(12)
TP18792 KBC5_KSO(13)
TP18793 KBC5_KSO(14)
TP18794 KBC5_KSO(15)
TP18795 KBC5_KSO(2)
TP18732 KBC5_KSO(3)
TP18733 KBC5_KSO(4)
TP18734 KBC5_KSO(5)
TP18735 KBC5_KSO(6)
TP18736 KBC5_KSO(7)
TP18737 KBC5_KSO(8)
TP18738 KBC5_KSO(9)
TP18739 KBC5_TCLK
TP18740 KBC5_TDATA
TP18741 LAN3_ACT_LED#
TP18742 LAN3_CLKREQ#
TP18743 LAN3_LINK_1000#
TP18744 LAN3_LINK_10_100#
TP18749 LAN3_VPDCLK
TP18750 LAN3_VPDDATA
TP18751 LAN3_WAKE#
TP18752 LCD3_BKLTON
TP18753 LCD3_EDID_CLK
TP18754 LCD3_EDID_DATA
TP18755 LID3_SWITCH#
TP18756 LPC3_LAD(0)
TP18757 LPC3_LAD(1)
TP18758 LPC3_LAD(2)
TP18759 LPC3_LAD(3)
TP18760 LPC3_LFRAME#
TP18710 MCH3_BMBUSY#
TP18711 MCH3_CLKREQ#
TP18712 MCH3_CL_VREF
TP18713 MCH3_EXTTS0#
TP18714 MCH3_EXTTS1#
TP18715 MCH3_ICHSYNC#
TP18718 MDC3_BCLK
TP18719 MDC3_RST#
TP18720 MDC3_SDI1
TP18721 MDC3_SDO
TP18722 MDC3_SYNC
TP18726 MEM1_VREF
TP18728 MIN3_CLKREQ#
TP18729 MIO3_BUTTON#

Samsung Confidential

http://hobi-elektronika.net

DRAW ,	DATE 2/8/2007	TITLE SYDNEY TESTPOINT	SAMSUNG ELECTRONICS
CHECK ,	DEV. STEP PR		
APPROVAL ,	REV 1.0		PART NO. BA41-#####A
MODULE CODE	LAST EDIT February 8, 2007 10:00:08 PM		PAGE 70 OF 74

SAMSUNG PROPRIETARY
THIS DOCUMENT CONTAINS CONFIDENTIAL PROPRIETARY INFORMATION THAT IS SAMSUNG ELECTRONICS CO'S PROPERTY. DO NOT DISCLOSE TO OR DUPLICATE FOR OTHERS EXCEPT AS AUTHORIZED BY SAMSUNG.

TP19084 P5.0V_ALW_5REF_SUS

TP19088 PCI3_AD(0)
TP19089 PCI3_AD(1)
TP19090 PCI3_AD(10)
TP19091 PCI3_AD(11)
TP19092 PCI3_AD(12)
TP19093 PCI3_AD(13)
TP19094 PCI3_AD(14)
TP19095 PCI3_AD(15)
TP19032 PCI3_AD(16)
TP19033 PCI3_AD(17)
TP19034 PCI3_AD(18)
TP19035 PCI3_AD(19)
TP19036 PCI3_AD(2)
TP19037 PCI3_AD(20)
TP19038 PCI3_AD(21)
TP19039 PCI3_AD(22)
TP19040 PCI3_AD(23)
TP19041 PCI3_AD(24)
TP19042 PCI3_AD(25)
TP19043 PCI3_AD(26)
TP19044 PCI3_AD(27)
TP19045 PCI3_AD(28)
TP19046 PCI3_AD(29)
TP19047 PCI3_AD(3)
TP19048 PCI3_AD(30)
TP19049 PCI3_AD(31)
TP19050 PCI3_AD(4)
TP19051 PCI3_AD(5)
TP19052 PCI3_AD(6)
TP19053 PCI3_AD(7)
TP19054 PCI3_AD(8)
TP19055 PCI3_AD(9)
TP19056 PCI3_CBE0#
TP19057 PCI3_CBE1#
TP19058 PCI3_CBE2#
TP19059 PCI3_CBE3#
TP19060 PCI3_CLKRUN#
TP19061 PCI3_DEVSEL#
TP19062 PCI3_FRAME#
TP19063 PCI3_GNT0#
TP19000 PCI3_INTA#
TP19001 PCI3_INTB#
TP19002 PCI3_INTC#
TP19003 PCI3_INTD#
TP19004 PCI3_IRDY#
TP19005 PCI3_PAR
TP19006 PCI3_PERR#
TP19007 PCI3_PLOCK#
TP19008 PCI3_REQ0#
TP19009 PCI3_RST#
TP19010 PCI3_SERR#
TP19011 PCI3_STOP#
TP19012 PCI3_TRDY#

TP19071 P1.25V_PWRGD

TP19013 PEG3_CRT_B
TP19014 PEG3_CRT_DDCCLK
TP19015 PEG3_CRT_DDCCLKF
TP19016 PEG3_CRT_DDCDATA
TP19017 PEG3_CRT_DDCDATAF
TP19018 PEG3_CRT_G
TP19019 PEG3_CRT_HSYNC
TP19020 PEG3_CRT_R
TP19021 PEG3_CRT_VSYNC
TP19022 PEG3_DVI5_CLK
TP19023 PEG3_DVI5_DATA
TP19024 PEG3_DVI_CLKF
TP19025 PEG3_DVI_DATAF
TP19026 PEG3_DVI_DETECT
TP19027 PEG3_HDMI_CLK
TP19028 PEG3_HDMI_DATA
TP19029 PEG3_HDMI_DETECT
TP19030 PEG3_LCD_BKLTEN
TP19031 PEG3_LCD_BRIT
TP18968 PEG3_MIOB(0)
TP18969 PEG3_MIOB(1)
TP18970 PEG3_MIOB(11)
TP18971 PEG3_MIOB(3)
TP18972 PEG3_MIOB(4)
TP18973 PEG3_MIOB(5)
TP18974 PEG3_MIOB(8)
TP18975 PEG3_MIOB(9)
TP18976 PEG3_MIOB_CTL3
TP18977 PEG3_SEL
TP18978 PEG3_THERMDN
TP18979 PEG3_THERMDP
TP18980 PEG3_TV0_C
TP18981 PEG3_TV0_COMP
TP18982 PEG3_TV0_Y

TP18889 PEG3_DVI_CLK
TP18890 PEG3_DVI_DATA
TP18891 PEG3_LCD_VDDON

TP18983 PEX3_WAKE#
TP18984 PLT3_RST#

TP18985 PLT3_RST_ORG#
TP18986 PS25_KCLK
TP18987 PS25_KDATA
TP18988 PS25_MCLK
TP18989 PS25_MDATA
TP18990 REM_DATA
TP18991 REM_WAKEUP
TP18992 ROB3_NF_ALE

TP18993 ROB3_NF_CE0#

TP18994 ROB3_NF_CE1#

TP18995 ROB3_NF_CLE

TP18996 ROB3_NF_IO(0)

TP18997 ROB3_NF_IO(1)

TP18998 ROB3_NF_IO(10)

TP18999 ROB3_NF_IO(11)

TP18936 ROB3_NF_IO(12)

TP18937 ROB3_NF_IO(13)

TP18938 ROB3_NF_IO(14)

TP18939 ROB3_NF_IO(15)

TP18940 ROB3_NF_IO(2)

TP18941 ROB3_NF_IO(3)

TP18942 ROB3_NF_IO(4)

TP18943 ROB3_NF_IO(5)

TP18944 ROB3_NF_IO(6)

TP18945 ROB3_NF_IO(7)

TP18946 ROB3_NF_IO(8)

TP18947 ROB3_NF_IO(9)

TP18948 ROB3_NF_RB
TP18949 ROB3_NF_RE0#

TP18950 ROB3_NF_WE0#
TP18951 ROB3_NF_WP#

TP18957 SBD_VGA3_DVI_CLK_INT
TP18958 SBD_VGA3_DVI_DATA_INT
TP18959 SBD_VGA3_DVI_DETECT

TP18924 SIO3_DRST#
TP18925 SIO3_DTR1#
TP18926 SIO3_RTS1#
TP18927 SMB3_ALERT#
TP18928 SMB3_CLK
TP18929 SMB3_DATA

TP18930 SMB3_ME_CLK
TP18931 SMB3_ME_DATA
TP18932 SPI3_CLK

TP18933 SPI3_CS0#
TP18934 SPI3_CS1#
TP18935 SPI3_MISO
TP18892 SPI3_MOSI

TP18893 SPK5_L+

TP18894 SPK5_L-

TP18895 SPK5_R+

TP18896 SPK5_R-

TP18897 S_CHP3_SERIRQ
TP18898 S_CHP3_SUSSTAT*
TP18899 S_CLK3_TPMLPC
TP18900 S_LPC3_LAD(0)
TP18901 S_LPC3_LAD(1)
TP18902 S_LPC3_LAD(2)
TP18903 S_LPC3_LAD(3)
TP18904 S_LPC3_LFRAME*
TP18905 S_PCI3_CLKRUN*
TP18906 S_PLT3_RSTF*
TP18907 S_SMB3_CLK
TP18908 S_SMB3_DATA

TP18909 THM3_ALERT#
TP18910 THM3_STP#

TP18911 US_PWRON_INV#

TP18912 VCCA_3GP

TP18915 VCCP3_PWRGD

TP18920 VGA3_VOLTAGE_ID

TP18922 VRM3_CLK_PWRGD#
TP18923 VRM3_CLK_PWRGD#_INV
TP18865 VRM3_CPU_PWRGD
TP18866 WLON_LED#

TP18868 0.7VDDQC

TP18869 CB_MD_VCC

TP18870 CB_VCCA

TP18871 CB_VPPA

TP18872 CHG_REF

TP18873 EGFX_CORE
TP18874 EGFX_CORE
TP18875 EGFX_CORE
TP18876 EGFX_CORE
TP18877 EGFX_CORE
TP18878 G_AUD
TP18879 G_AUD

TP18880 G_CHG

TP18881 G_CPU

TP18882 G_DDR

TP18883 G_GFX

TP18884 G_MIC
TP18885 G_MIC

TP18886 G_P1.25V

TP18887 G_P1.5V

TP18888 G_P3.3V

Samsung Confidential

http://hobi-elektronika.net

SAMSUNG PROPRIETARY
THIS DOCUMENT CONTAINS CONFIDENTIAL
PROPRIETARY INFORMATION THAT IS
SAMSUNG ELECTRONICS CO'S PROPERTY.
DO NOT DISCLOSE TO OR DUPLICATE FOR OTHERS
EXCEPT AS AUTHORIZED BY SAMSUNG.

TP18678 LCD_VDD3V
TP18679 LCD_VDD3V

TP18680 LDO_P5.4V

TP18681 NF_P1.2V
TP18682 NF_P1.2V

TP18685 P0.9V
TP18686 P0.9V

TP18687 P1.05V
TP18688 P1.05V

TP18689 P1.05V_PEG
TP18690 P1.05V_PEG

TP18691 P1.25V
TP18692 P1.25V

TP18693 P1.2V
TP18694 P1.2V

TP18695 P1.2V_LAN
TP18696 P1.2V_LAN

TP18697 P1.5V
TP18698 P1.5V

TP18701 P1.8V
TP18702 P1.8V
TP18703 P1.8V
TP18704 P1.8V
TP18705 P1.8V
TP18706 P1.8V_AUX
TP18707 P1.8V_AUX
TP18708 P1.8V_AUX
TP18709 P1.8V_AUX
TP18646 P1.8V_AUX
TP18647 P1.8V_P2.5V_LAN
TP18648 P1.8V_P2.5V_LAN

TP18650 P12.0V_ALW

TP18651 P2.5V

TP18656 P3.3V
TP18657 P3.3V
TP18658 P3.3V
TP18659 P3.3V
TP18660 P3.3V
TP18661 P3.3V_ALW
TP18662 P3.3V_ALW
TP18663 P3.3V_ALW
TP18664 P3.3V_ALW
TP18665 P3.3V_ALW
TP18666 P3.3V_AUX
TP18667 P3.3V_AUX
TP18668 P3.3V_AUX
TP18669 P3.3V_AUX
TP18670 P3.3V_AUX

TP18675 P3.3V_LAN
TP18676 P3.3V_LAN

TP18677 P3V_MICOM
TP18614 P3V_MICOM

TP18615 P4.XV_AUD
TP18616 P4.XV_AUD

TP18617 P5.0V
TP18618 P5.0V
TP18619 P5.0V
TP18620 P5.0V
TP18621 P5.0V

TP18625 P5.0V_ALW

TP18627 P5.0V_AMP
TP18628 P5.0V_AMP

TP18629 P5.0V_AUD
TP18630 P5.0V_AUD

TP18631 PRTC_BAT

TP18634 REM_P3V

TP18635 SBD_P3.3V
TP18636 SBD_P3.3V

TP18637 SBD_P5.0V
TP18638 SBD_P5.0V

TP18639 SUB_AD_DC
TP18640 SUB_AD_DC

TP18641 S_P3.3V

TP18644 S_P3.3V_AUX

TP18645 S_P5.0V_AUX

TP18604 TMDS_PLLVDD

TP18605 VCC_CRT

TP18606 VDC
TP18607 VDC
TP18608 VDC

TP18609 VDC_ADPT
TP18610 VDC_ADPT
TP18611 VDC_ADPT
TP19108 VDC_ADPT
TP19109 VDC_ADPT

TP18612 VDC_INV
TP18613 VDC_INV

TP19110 GROUND
TP19111 GROUND
TP19112 GROUND
TP19113 GROUND
TP19114 GROUND
TP19115 GROUND
TP19116 GROUND
TP19117 GROUND
TP19118 GROUND
TP19119 GROUND
TP19120 GROUND
TP19121 GROUND
TP19122 GROUND
TP19123 GROUND
TP19124 GROUND
TP19125 GROUND
TP19127 GROUND
TP19126 GROUND
TP19128 GROUND

Samsung Confidential

http://hobi-elektronika.net

SAMSUNG PROPRIETARY

THIS DOCUMENT CONTAINS CONFIDENTIAL
PROPRIETARY INFORMATION THAT IS
SAMSUNG ELECTRONICS CO'S PROPERTY.
DO NOT DISCLOSE TO OR DUPLICATE FOR OTHERS
EXCEPT AS AUTHORIZED BY SAMSUNG.

Samsung
Confidential

http://hobi-elektronika.net

SAMSUNG PROPRIETARY

THIS DOCUMENT CONTAINS CONFIDENTIAL
PROPRIETARY INFORMATION THAT IS
SAMSUNG ELECTRONICS CO'S PROPERTY.
DO NOT DISCLOSE TO OR DUPLICATE FOR OTHERS
EXCEPT AS AUTHORIZED BY SAMSUNG.

Samsung
Confidential

http://hobi-elektronika.net