SAMSUNG PROPRIETARY
THIS DOCUMENT CONTAINS CONFIDENTIAL
PROPRIETARY INFORMATION THAT IS
SAMSUNG ELECTRONICS CO'S PROPERTY.
DO NOT DISCLOSE TO OR DUPLICATE FOR OTHERS
EXCEPT AS AUTHORIZED BY SAMSUNG.

ISTANBUL

CPU : Intel PENRYN
Chip Set : Intel CANTIGA PM + ICH9M
Remarks : Montevina Platform (NB9M)

Model Name : ISTANBUL
PBA Name : MAIN
PCB Code : TPT : BA41-00919A
GCE : BA41-00920A
NAN : BA41-00921A

Dev. Step : PV
Revision : 00
T.R. Date : 2008.07.18

DRAW	CHECK	APPROVAL

■ *Owner : SEC Mobile R & D* *Signature :* *X*

Samsung Confidential

DRAW TERMI	DATE 1/10/2008	TITLE ISTANBUL COVER	SAMSUNG ELECTRONICS
CHECK HJ KIM	DEV. STEP PV		PART NO. BA41-00920A
APPROVAL SJ PARK	REV 00		
MODULE CODE	LAST EDIT July 18, 2008 13:52:45 PM		PAGE 1 OF 19

SAMSUNG PROPRIETARY
THIS DOCUMENT CONTAINS CONFIDENTIAL PROPRIETARY INFORMATION THAT IS SAMSUNG ELECTRONICS CO'S PROPERTY. DO NOT DISCLOSE TO OR DUPLICATE FOR OTHERS EXCEPT AS AUTHORIZED BY SAMSUNG.

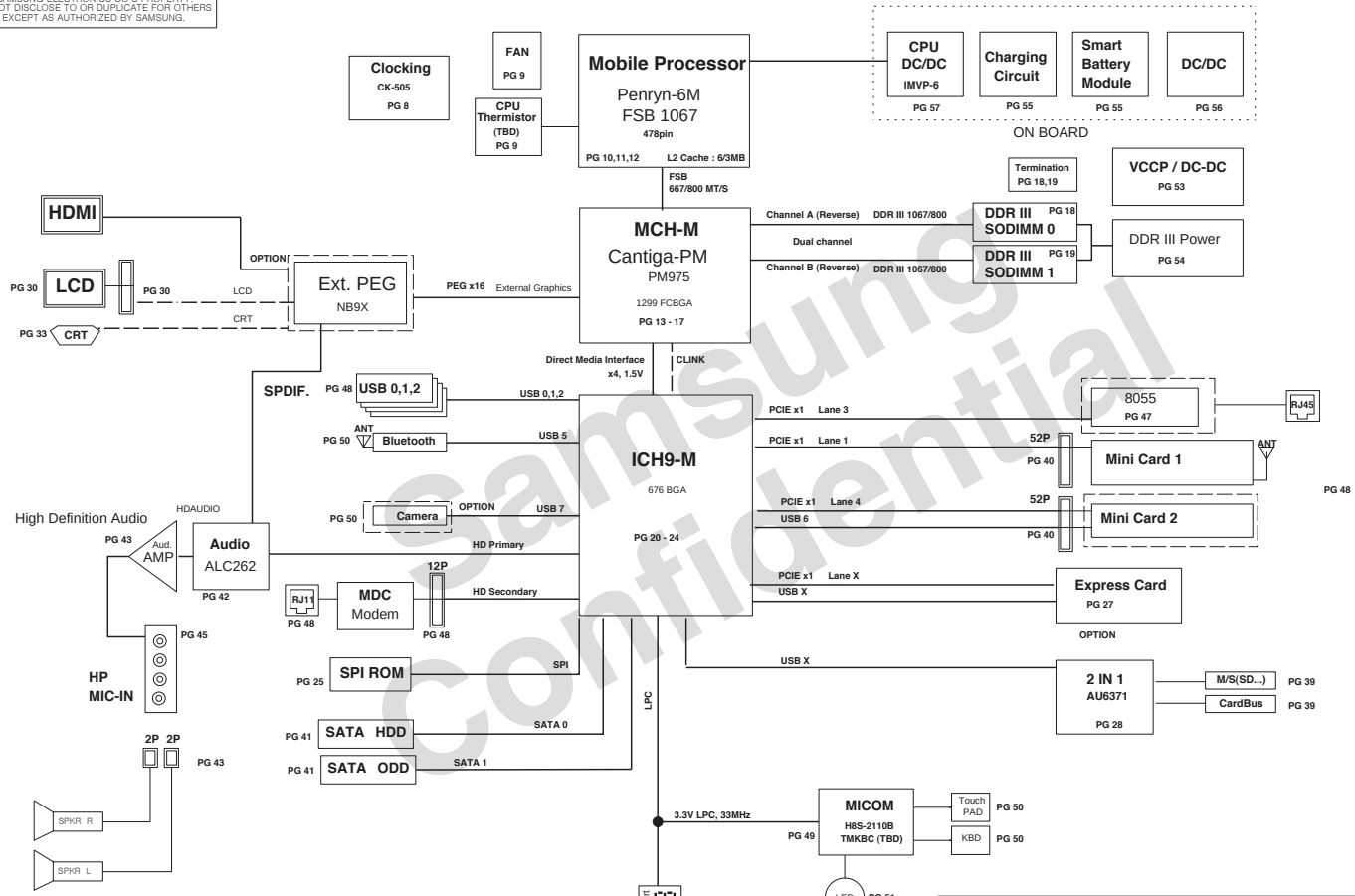

Samsung Confidential

http://hobi-elektronika.net

DRAW: TERMI	DATE: 1/10/2008	TITLE: ISTANBUL MAIN OPERATION BLOCK DIAGRAM	SAMSUNG ELECTRONICS
CHECK: HJ KIM	DEV. STEP: PV		
APPROVAL: SJ PARK	REV: 00		PART NO. BA41-00920A
MODULE CODE	LAST EDIT: July 18, 2008 13:52:45 PM		PAGE 2 OF 19

SAMSUNG PROPRIETARY
THIS DOCUMENT CONTAINS CONFIDENTIAL PROPRIETARY INFORMATION THAT IS SAMSUNG ELECTRONICS CO'S PROPERTY. DO NOT DISCLOSE TO OR DUPLICATE FOR OTHERS EXCEPT AS AUTHORIZED BY SAMSUNG.

BOARD INFORMATION

SCHEMATIC ANNOTATIONS AND BOARD INFORMATION

PCI Devices

Devices	IDSEL#	REQ/GNT#	Interrupts
Cardbus	AD25	3	A,B,C
USB	AD29(internal)	-	USB2.0 #0 (USB0) : A USB2.0 #1 (USB1) : D USB2.0 #2 (USB4) : C USB2.0 #3 (USB5) : E USB2.0 #4 (EHCI) : H
Hub to PCI	AD30(internal)	-	-
LPC bridge/IDE/AC97/SMBUS	AD31(internal)	-	B
Internal MAC	AD24(internal)	-	E
AC Link	-	-	B
GLAN	-	-	F

Voltage Rails

VDC	Primary DC system power supply (7 to 21V)
VCC_CORE	Core Voltage for CPU
GFX_CORE	Core Voltage for GPU
P1.05V (VCCP)	VTT for CPU, Crestline & ICH8-M
P3.3V_MICOM	3.3V always power rail (for Micom)
P1.5V	1.5V switched power rail (off in S3-S5)
P1.8V	1.8V switched power rail (off in S3-S5)
P1.8V_AUX	1.8V power rail for DDR (off in S4-S5)
P0.9V	0.9V power rail for DDR (off in S3-S5)
P3.3V	3.3V switched power rail (off in S3-S5)
P3.3V_AUX	3.3V switched on power rail (off in S4-S5)
P5.0V	5.0V switched power rail (off in S3-S5)
P5.0V_AUX	5.0V switched on power rail (off in S4-S5)
P5.0V_ALW	5.0V always power rail

USB PORT Assign

PORT #	ASSIGNED TO
	SYSTEM PORT 0
	SYSTEM PORT 1
	SYSTEM PORT 2
	NC
	NC
	Bluetooth
	Mini PCI Express 2
	Camera
	NC
	NC

PCI Express Assign

PORT #	ASSIGNED TO
0	NC
1	Mini Card 1 (WLAN)
2	NC
3	LOM
4	Mini Card 2 (ROBSON or DVB-T)
5	NC

Crystal / Oscillator

TYPE	FREQUENCY	DEVICE	USAGE
Crystal	32.768KHz	ICH8-M	Real Time Clock
Crystal	10MHz	MICOM	HD64F2169/2160
Crystal	14.318MHz	CLOCK-Generator	CK-505
Crystal	25MHz	LAN	Intel LAN

LCD Pannel Detect (TBD)

Devices	Resolution	PANNEL_DETECT_0

I C / SMB Address

Devices	Address	Hex	Bus
ICH8-m	Master	-	SMBUS Master
CPU Thermal Sensor	0111 101x	7Ah	Thermal Sensor
SODIMM0	1010 000x	A0h	-
SODIMM1	1010 010x	A4h	-
Thermal Sensor on SODIMM0	0011 000x	30h	-
Thermal Sensor on SODIMM1	0011 010x	34h	-
CK-505M (Clock Generator)	1101 001x	D2h	Clock, Unused Clock Output Disable

REVISION HISTORY

See rev notes for more information.

Samsung Confidential

http://hobi-elektronika.net

DESIGN: TERMI	DATE: 1/10/2008	TITLE: ISTANBUL CHIPSET POWER UNDEFINED	SAMSUNG ELECTRONICS
CHECK: HJ KIM	DEV. STEP: PV		
APPROVAL: SJ PARK	REV: 00		PART NO.: BA41-00920A
MODULE CODE	LAST EDIT: July 18, 2008 13:52:45 PM		PAGE 3 OF 19

SAMSUNG PROPRIETARY
THIS DOCUMENT CONTAINS CONFIDENTIAL PROPRIETARY INFORMATION THAT IS SAMSUNG ELECTRONICS CO'S PROPERTY. DO NOT DISCLOSE TO OR DUPLICATE FOR OTHERS EXCEPT AS AUTHORIZED BY SAMSUNG.

POWER DIAGRAM

Rev 0.1

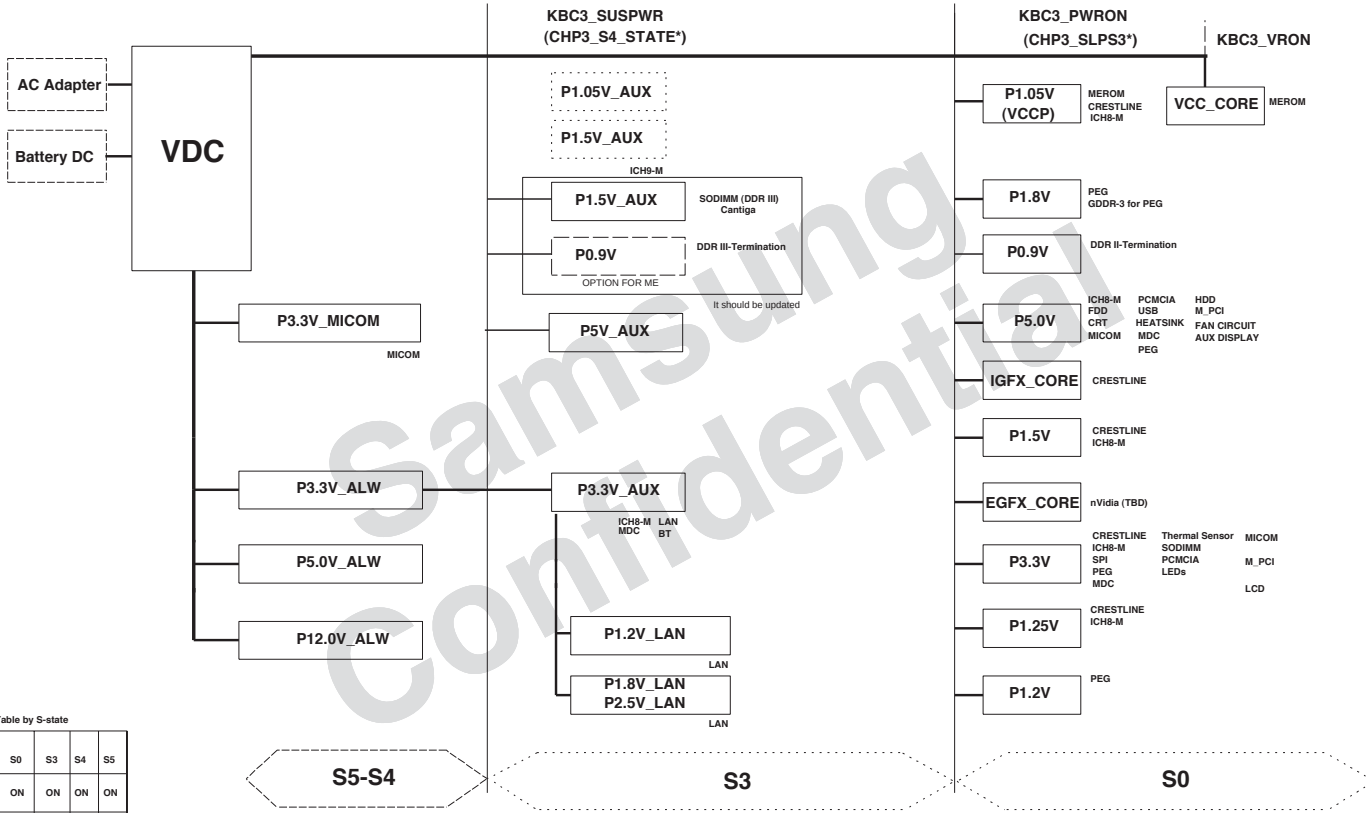

Power On/Off Table by S-state

Rail / State	S0	S3	S4	S5
+V*A(LWS) +V*LAN	ON	ON	ON	ON
+1.8V_AUX +0.9V	ON	ON	—	—
+V*AUX	ON	ON	—	—
+V	ON	—	—	—
+VL (CORE)	ON	—	—	—

Samsung Confidential

http://hobi-elektronika.net

DRAW: TERMI	DATE: 1/10/2008	TITLE: ISTANBUL MAIN POWER DIAGRAM	SAMSUNG ELECTRONICS
CHECK: HJ KIM	DEV. STEP: PV		
APPROVAL: SJ PARK	REV: 00		PART NO.: BA41-00920A
MODULE CODE	LAST EDIT: July 18, 2008 13:52:45 PM		PAGE 4 OF 19

SAMSUNG PROPRIETARY
THIS DOCUMENT CONTAINS CONFIDENTIAL PROPRIETARY INFORMATION THAT IS SAMSUNG ELECTRONICS CO'S PROPERTY. DO NOT DISCLOSE TO OR DUPLICATE FOR OTHERS EXCEPT AS AUTHORIZED BY SAMSUNG.

POWER RAILS ANALYSIS

Rev. 0.6 (060920)

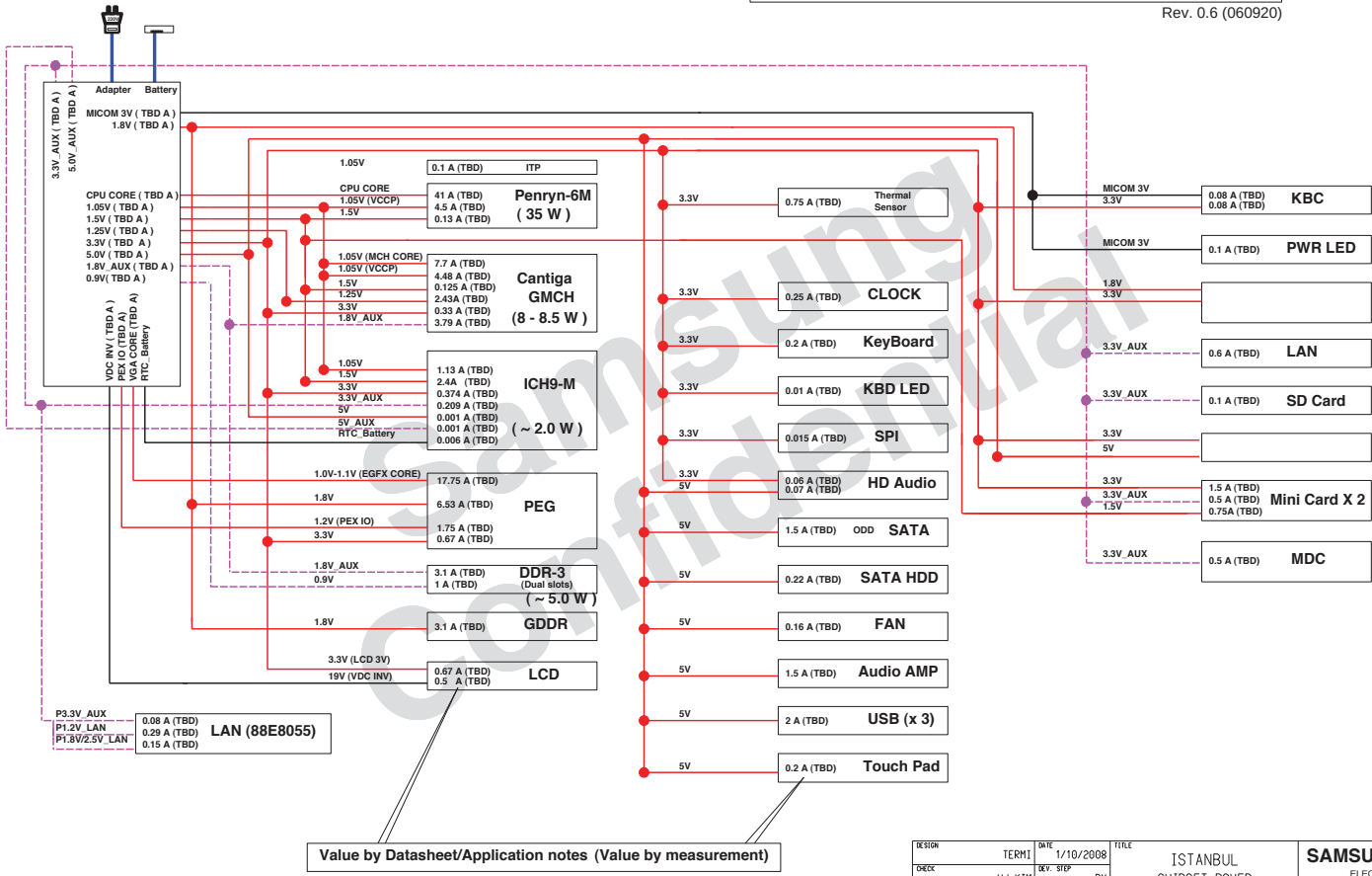

Samsung confidential

http://hobi-elektronika.net

DESIGN: TERMI	DATE: 1/10/2008	TITLE: ISTANBUL CHIPSET POWER UNDEFINED	SAMSUNG ELECTRONICS
CHECK: HJ KIM	DEV. STEP: PV		
APPROVAL: SJ PARK	REV: 00		PART NO.: BA41-00920A
MODULE CODE	LAST EDIT: July 18, 2008 13:52:45 PM		PAGE 5 OF 19

SAMSUNG PROPRIETARY
THIS DOCUMENT CONTAINS CONFIDENTIAL PROPRIETARY INFORMATION THAT IS
DO NOT DISCLOSE TO OR DUPLICATE FOR OTHERS EXCEPT AS AUTHORIZED BY SAMSUNG.

POWER SEQUENCE

Host Boot / ME Off
(SLPS4* = S4_STATE*) > (SLPM* = SLPS3*)
M-1) KBC3_DDR_PWRON (TBD) = 8) KBC3_SUSPWR
M-2) KBC3_ME_PWRON = 15) KBC3_PWRON

Host / ME Boot
(SLPS4* = S4_STATE*) > SLPM* > SLPS3*

Host S5 / ME Boot
(SLPS4* = SLPM*) > S4_STATE* > SLPS3*

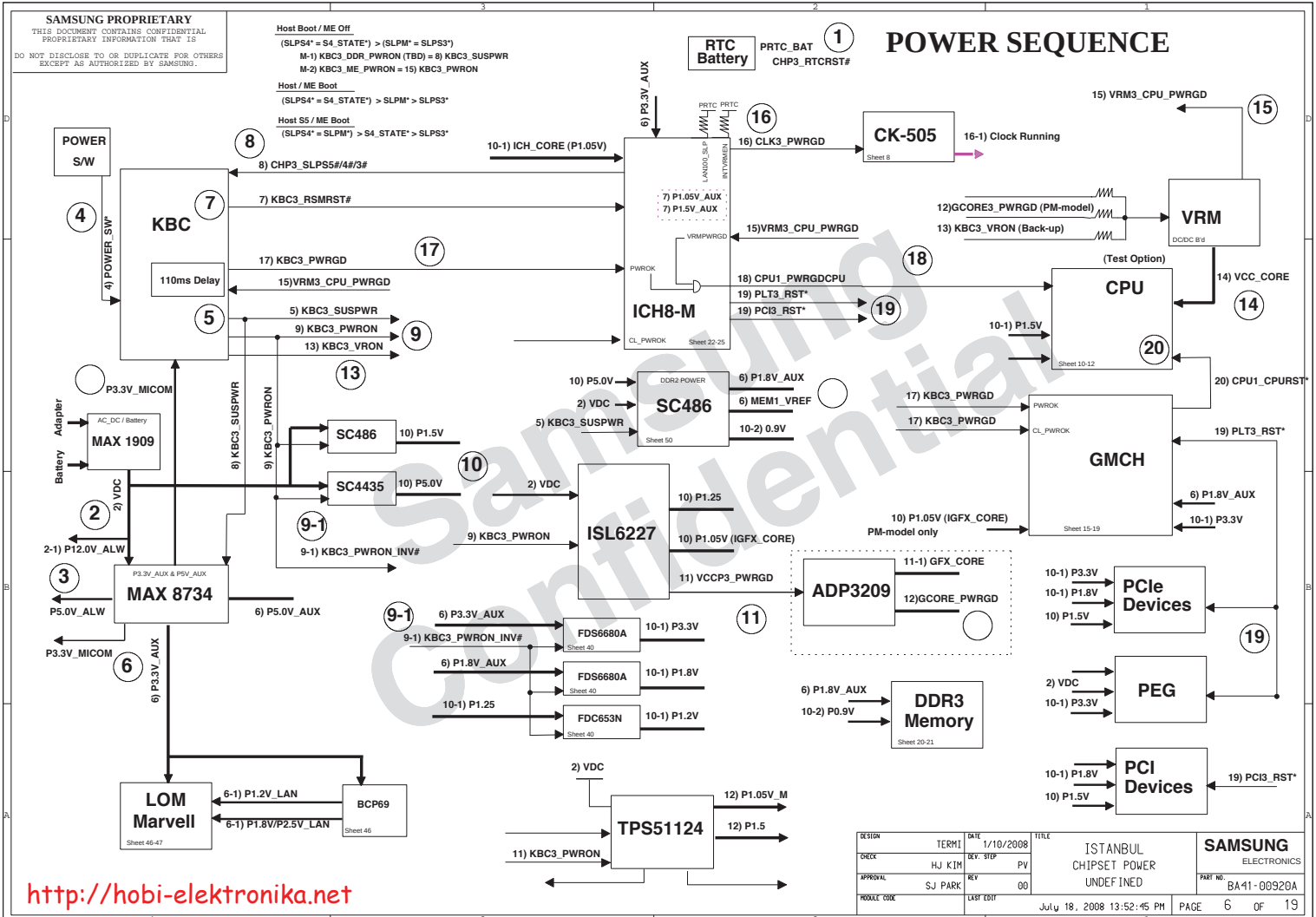

DESIGN: TERMI	DATE: 1/10/2008	TITLE: ISTANBUL CHIPSET POWER UNDEFINED	SAMSUNG ELECTRONICS
CHECK: HJ KIM	DEV. STEP: PV		
APPROVAL: SJ PARK	REV: 00		PART NO. BA41-00920A
MODULE CODE	LAST EDIT	July 18, 2008 13:52:45 PM	PAGE 6 OF 19

Samsung Confidential

http://hobi-elektronika.net

SAMSUNG PROPRIETARY
THIS DOCUMENT CONTAINS CONFIDENTIAL PROPRIETARY INFORMATION THAT IS SAMSUNG ELECTRONICS CO'S PROPERTY. DO NOT DISCLOSE TO OR DUPLICATE FOR OTHERS EXCEPT AS AUTHORIZED BY SAMSUNG.

CLOCK DISTRIBUTION

Rev. 0.1

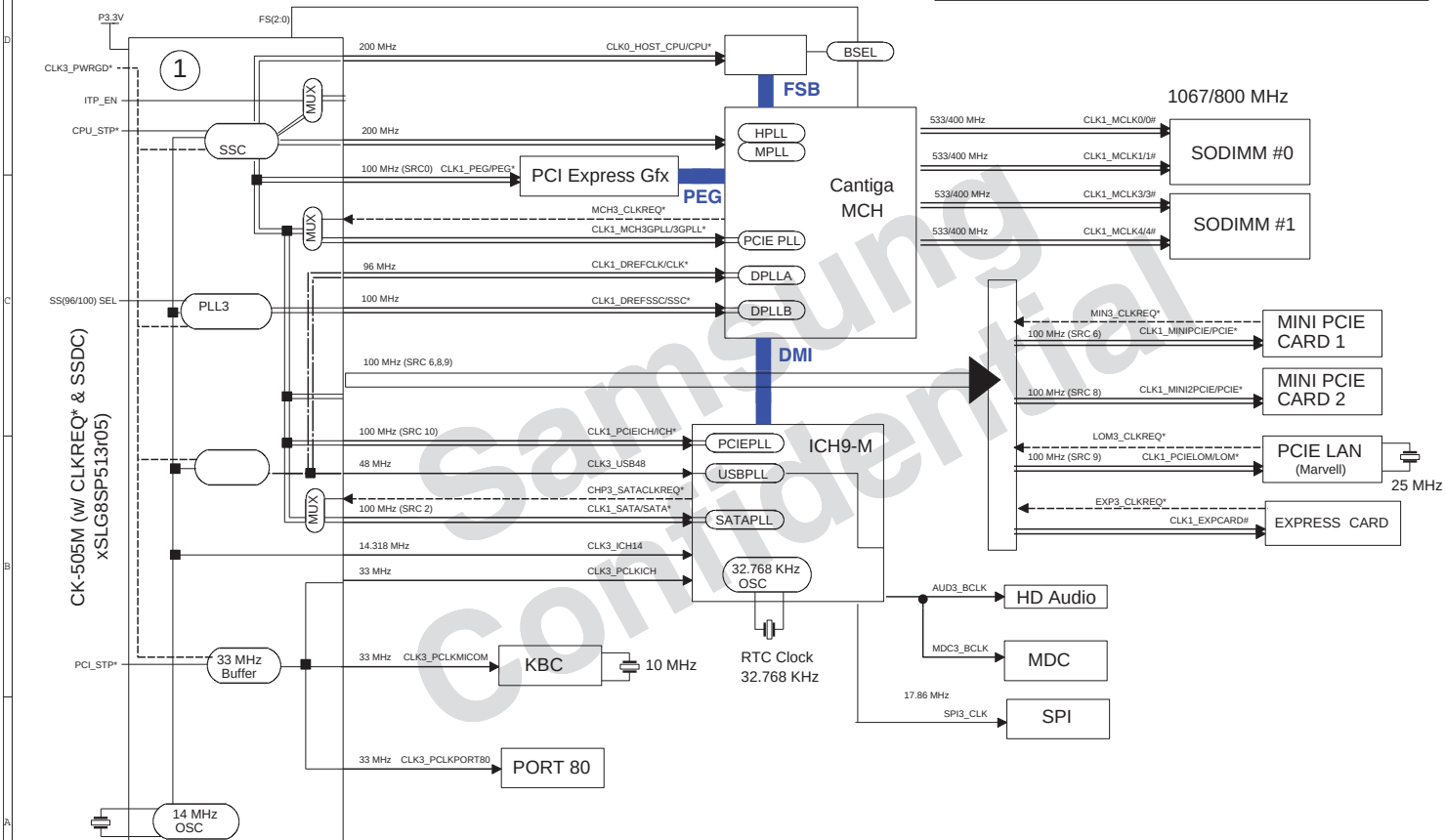

Samsung Confidential

Page 8

http://hobi-elektronika.net

DRAW: TERMI	DATE: 1/10/2008	TITLE: ISTANBUL CLOCK DIAGRAM	SAMSUNG ELECTRONICS
CHECK: HJ KIM	DEV. STEP: PV		
APPROVAL: SJ PARK	REV: 00		PART NO.: BA41-00920A
MODULE CODE	LAST EDIT: July 18, 2008 13:52:45 PM		PAGE 7 OF 19

SAMSUNG PROPRIETARY

THIS DOCUMENT CONTAINS CONFIDENTIAL PROPRIETARY INFORMATION THAT IS SAMSUNG ELECTRONICS CO'S PROPERTY. DO NOT DISCLOSE TO OR DUPLICATE FOR OTHERS EXCEPT AS AUTHORIZED BY SAMSUNG.

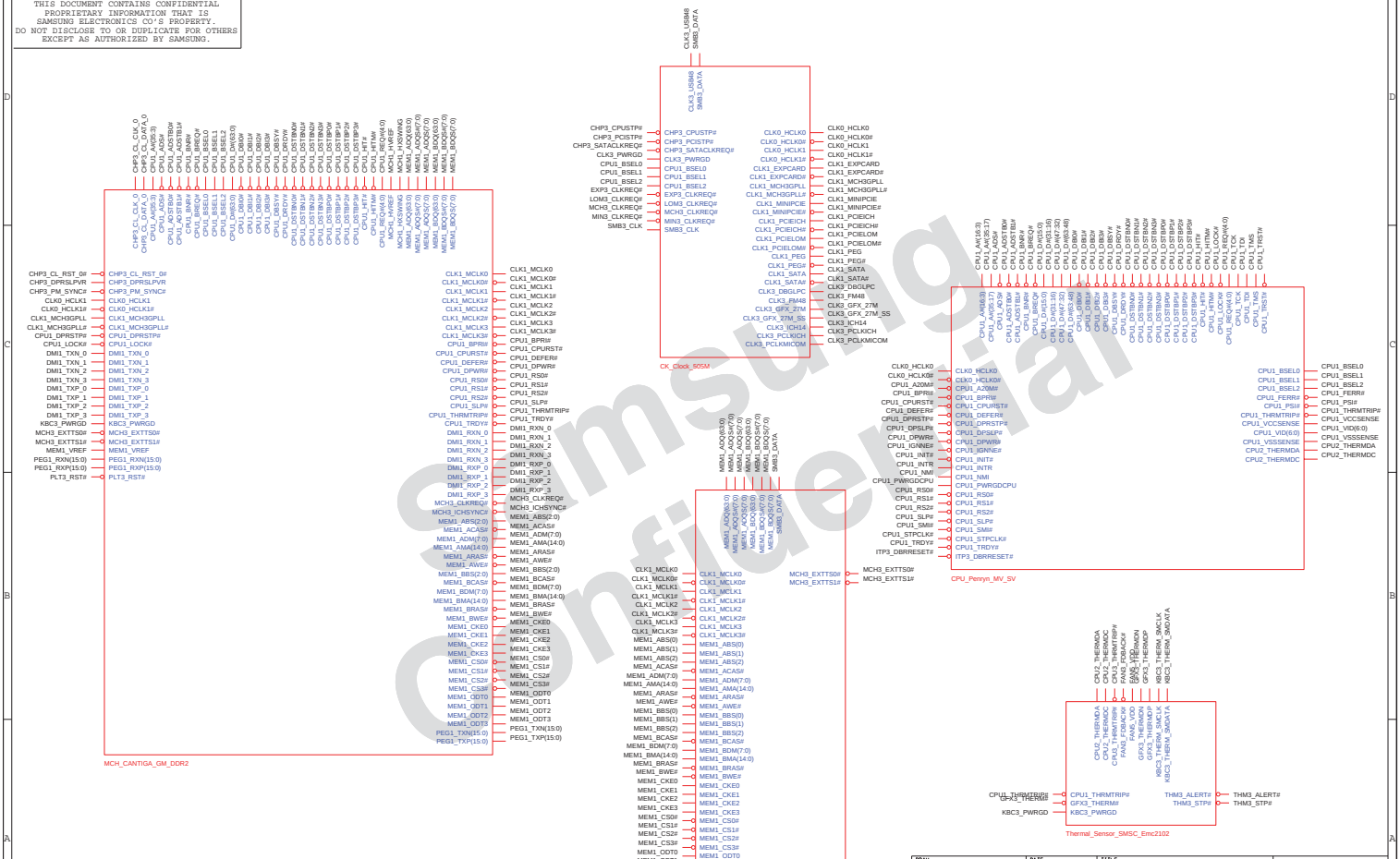

Samsung Confidential

http://hobi-elektronika.net

DRAW	TERMI	DATE 1/10/2008	TITLE ISTANBUL MAIN PENRYN CPU (1/3)
CHECK	HJ KIM	DEV. STEP PV	SAMSUNG ELECTRONICS
APPROVAL	SJ PARK	REV 00	PART NO. BA41-00920A
MODULE CODE		LAST EDIT July 18, 2008 13:52:45 PM	PAGE 8 OF 19

SAMSUNG PROPRIETARY
THIS DOCUMENT CONTAINS CONFIDENTIAL
PROPRIETARY INFORMATION THAT IS
SAMSUNG ELECTRONICS CO'S PROPERTY.
DO NOT DISCLOSE TO OR DUPLICATE FOR OTHERS
EXCEPT AS AUTHORIZED BY SAMSUNG.

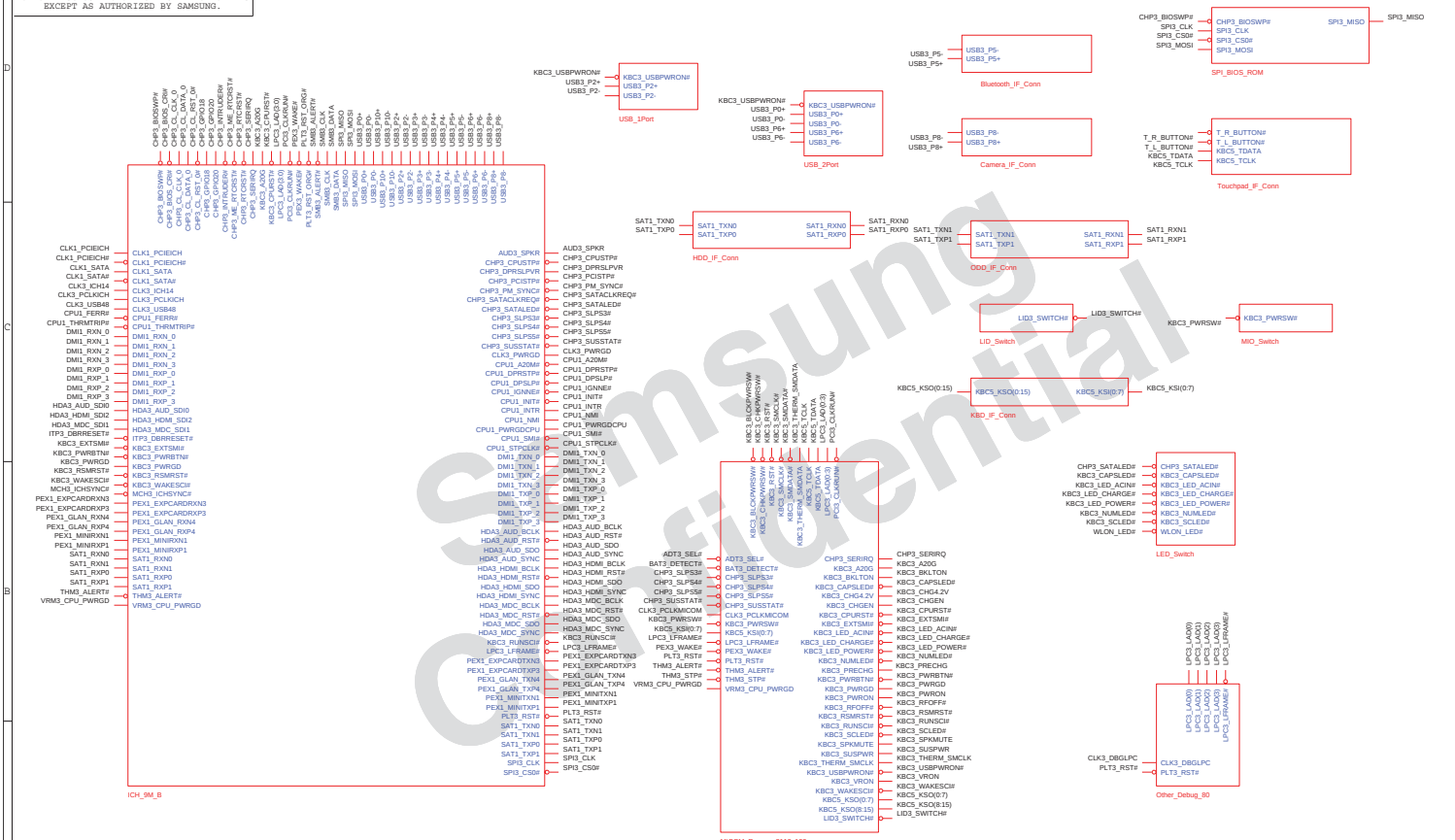

Samsung Confidential

http://hobi-elektronika.net

DESIGN: TERMI	DATE: 1/10/2008	TITLE: ISTANBUL CHIPSET POWER UNDEFINED	SAMSUNG ELECTRONICS
CHECK: HJ KIM	DEV. STEP: PV		PART NO.: BA41-00920A
APPROVAL: SJ PARK	REV: 00		
MODULE CODE	LAST EDIT: July 18, 2008 13:52:45 PM	PAGE 9 OF 19	

SAMSUNG PROPRIETARY
THIS DOCUMENT CONTAINS CONFIDENTIAL
PROPRIETARY INFORMATION THAT IS
SAMSUNG ELECTRONICS CO'S PROPERTY.
DO NOT DISCLOSE TO OR DUPLICATE FOR OTHERS
EXCEPT AS AUTHORIZED BY SAMSUNG.

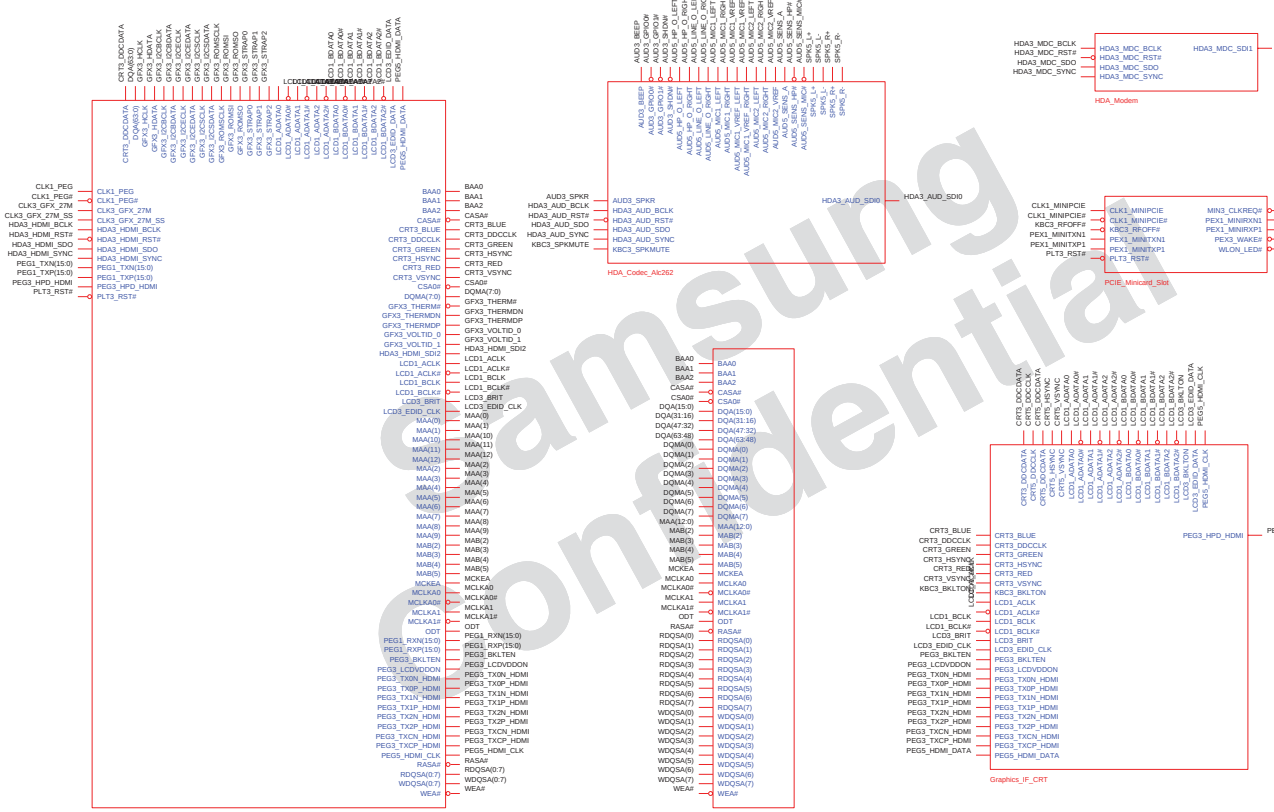

Samsung Confidential

http://hobi-elektronika.net

DESIGN	TERMI	DATE 1/10/2008	TITLE ISTANBUL CHIPSET POWER UNDEFINED
CHECK	HJ KIM	DEV. STEP PV	SAMSUNG ELECTRONICS
APPROVAL	SJ PARK	REV 00	PART NO. BA41-00920A
MODULE CODE		LAST EDIT July 18, 2008 13:52:45 PM	PAGE 10 OF 19

SAMSUNG PROPRIETARY
THIS DOCUMENT CONTAINS CONFIDENTIAL PROPRIETARY INFORMATION THAT IS SAMSUNG ELECTRONICS CO'S PROPERTY. DO NOT DISCLOSE TO OR DUPLICATE FOR OTHERS EXCEPT AS AUTHORIZED BY SAMSUNG.

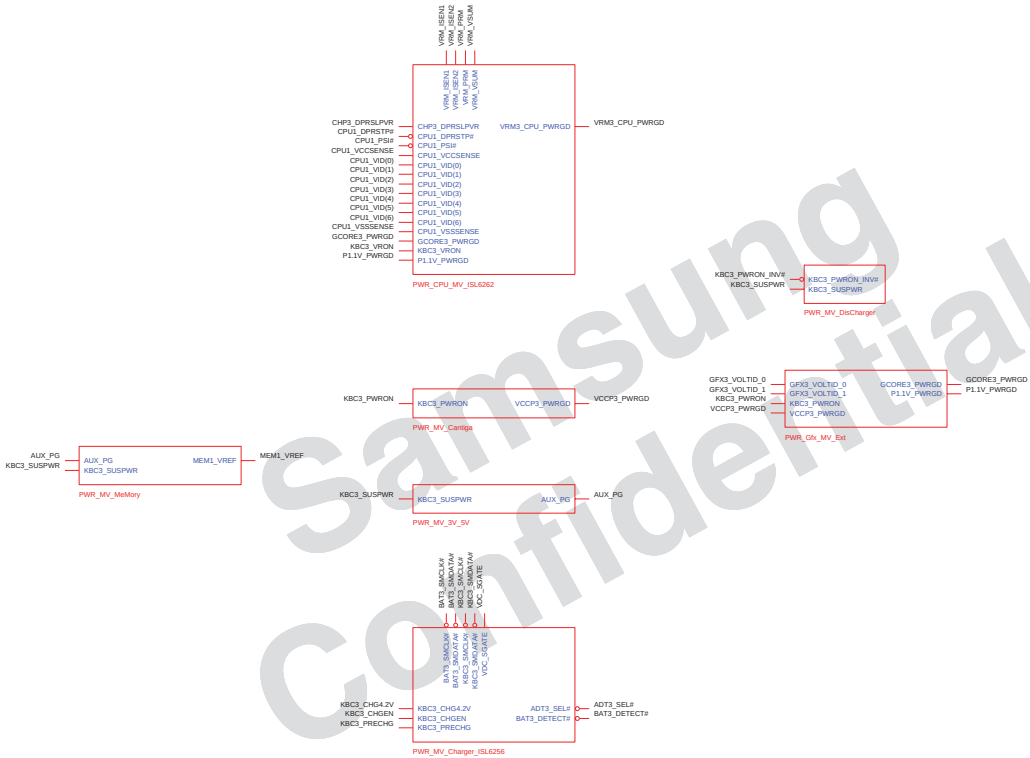

Samsung Confidential

http://hobi-elektronika.net

DESIGN: TERMI	DATE: 1/10/2008	TITLE: ISTANBUL CHIPSET POWER UNDEFINED	SAMSUNG ELECTRONICS
CHECK: HJ KIM	DEV. STEP: PV		
APPROVAL: SJ PARK	REV: 00		PART NO.: BA41-00920A
MODULE CODE	LAST EDIT: July 18, 2008 13:52:45 PM		PAGE 11 OF 19

SAMSUNG PROPRIETARY
THIS DOCUMENT CONTAINS CONFIDENTIAL
PROPRIETARY INFORMATION THAT IS
SAMSUNG ELECTRONICS CO'S PROPERTY.
DO NOT DISCLOSE TO OR DUPLICATE FOR OTHERS
EXCEPT AS AUTHORIZED BY SAMSUNG.

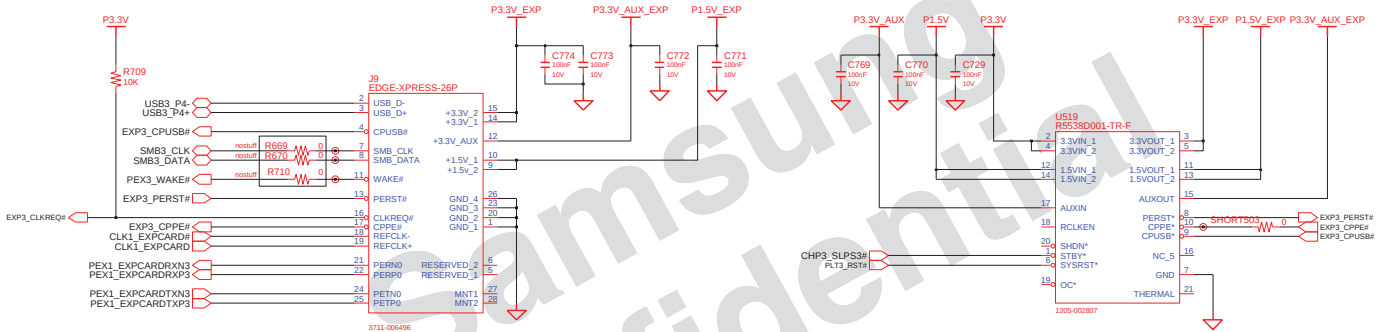

Samsung Confidential

http://hobi-elektronika.net

DRAW: TERMI	DATE: 1/10/2008	TITLE: ISTANBUL	SAMSUNG ELECTRONICS
CHECK: HJ KIM	DEV. STEP: PV		
APPROVAL: SJ PARK	REV: 00	EXPRESS CARD	PART NO.: BA41-00920A
MODULE CODE: undefined	LAST EDIT: July 18, 2008 13:52:45 PM		PAGE 12 OF 19

SAMSUNG PROPRIETARY
THIS DOCUMENT CONTAINS CONFIDENTIAL PROPRIETARY INFORMATION THAT IS SAMSUNG ELECTRONICS CO'S PROPERTY. DO NOT DISCLOSE TO OR DUPLICATE FOR OTHERS EXCEPT AS AUTHORIZED BY SAMSUNG.

2 IN 1 CARD

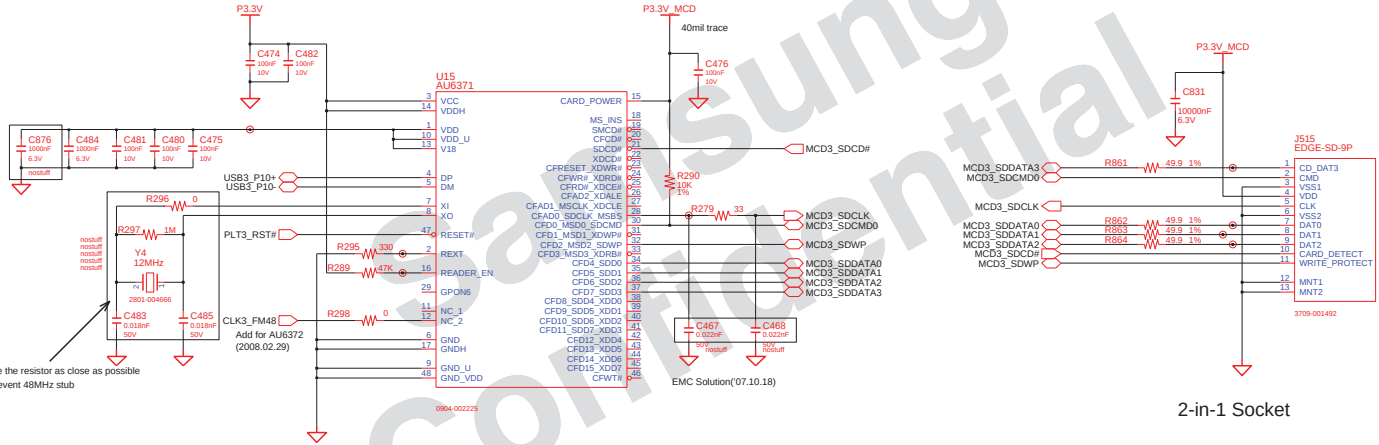

2-in-1 Socket

Samsung Confidential

http://hobi-elektronika.net

DRAW: TERMI	DATE: 1/10/2008	TITLE: ISTANBUL	SAMSUNG ELECTRONICS
CHECK: HJ KIM	DEV. STEP: PV	2 in 1 Socket	PART NO.: BA41-00920A
APPROVAL: SJ PARK	REV: 00		
MODULE CODE	LAST EDIT	July 18, 2008 13:52:45 PM	PAGE 13 OF 19

SAMSUNG PROPRIETARY
THIS DOCUMENT CONTAINS CONFIDENTIAL PROPRIETARY INFORMATION THAT IS SAMSUNG ELECTRONICS CO'S PROPERTY. DO NOT DISCLOSE TO OR DUPLICATE FOR OTHERS EXCEPT AS AUTHORIZED BY SAMSUNG.

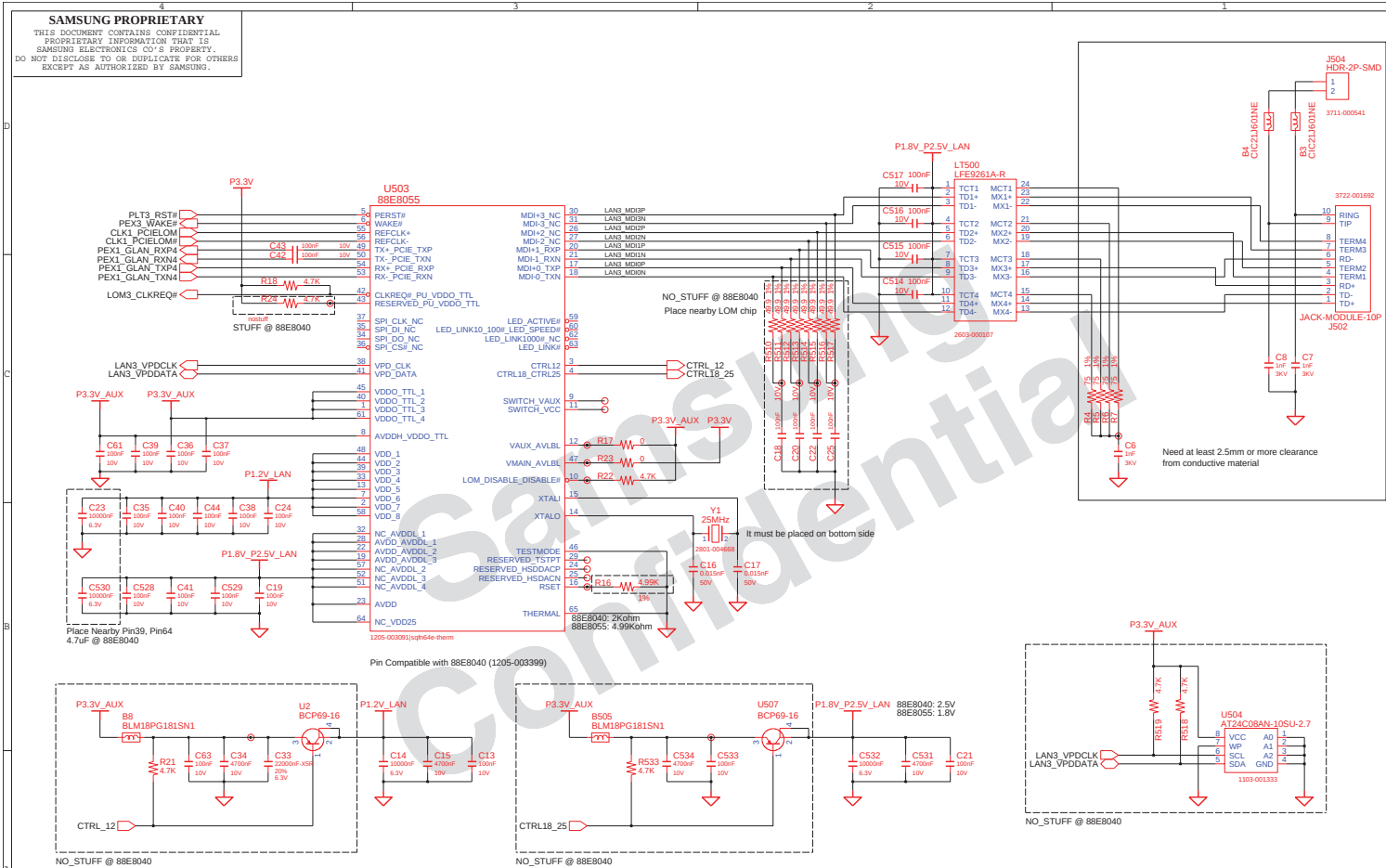

Samsung Confidential

http://hobi-elektronika.net

DRAW: TERMI	DATE: 1/10/2008	TITLE: ISTANBUL MAIN LAN	SAMSUNG ELECTRONICS
CHECK: HJ KIM	DEV. STEP: PV		
APPROVAL: SJ PARK	REV: 00		PART NO.: BA41-00920A
MODULE CODE: undefined	LAST EDIT: July 18, 2008 13:52:45 PM		PAGE 14 OF 19

SAMSUNG PROPRIETARY
THIS DOCUMENT CONTAINS CONFIDENTIAL PROPRIETARY INFORMATION THAT IS SAMSUNG ELECTRONICS CO'S PROPERTY. DO NOT DISCLOSE TO OR DUPLICATE FOR OTHERS EXCEPT AS AUTHORIZED BY SAMSUNG.

Switched Power On (P5.0V)

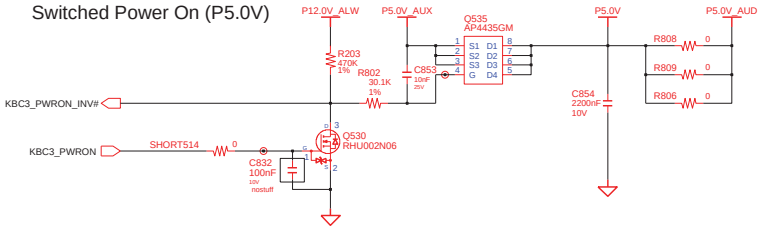

Switched Power On (P3.3V & 1.8V)

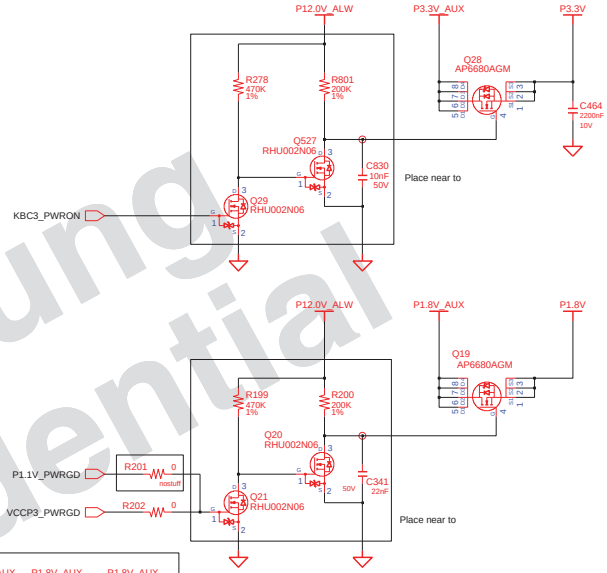

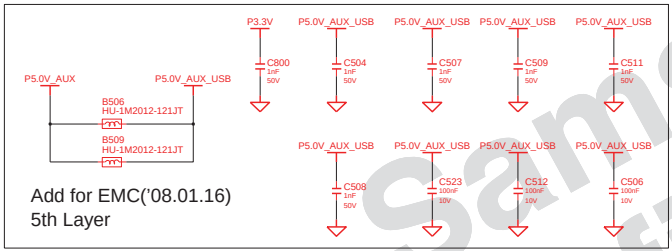

Add for EMC('08.01.16)
5th Layer

Audio Power (nostuff)

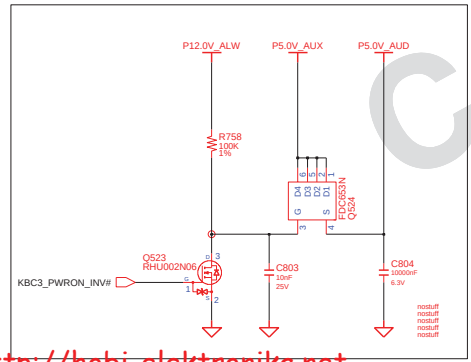

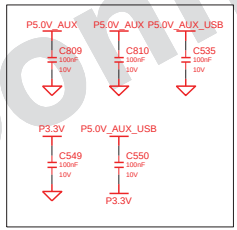

Add for SI(2007.12.6)

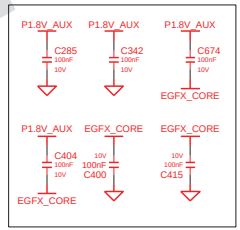

Add for SI(2008.03.07)

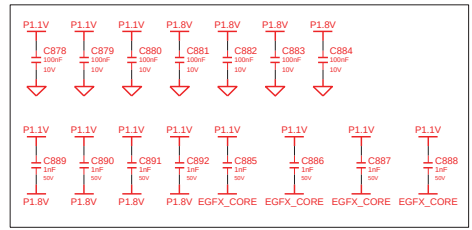

Add for EMI(2008.04.26)

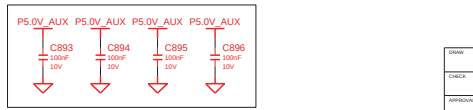

Add for EMI(2008.04.29)

DRAW: TERMI	DATE: 1/10/2008	TITLE: ISTANBUL MAIN MICOM & SWITCHED POWER	SAMSUNG ELECTRONICS
CHECK: HJ KIM	DEV. STEP: PV		
APPROVAL: SJ PARK	REV: 00		PART NO. BA41-00920A
MODULE CODE: undefined	LAST EDIT: July 18, 2008 13:52:45 PM	PAGE 15 OF 19	

Samsung Confidential

http://hobi-elektronika.net

SAMSUNG PROPRIETARY
THIS DOCUMENT CONTAINS CONFIDENTIAL PROPRIETARY INFORMATION THAT IS SAMSUNG ELECTRONICS CO'S PROPERTY. DO NOT DISCLOSE TO OR DUPLICATE FOR OTHERS EXCEPT AS AUTHORIZED BY SAMSUNG.

ICT PORT

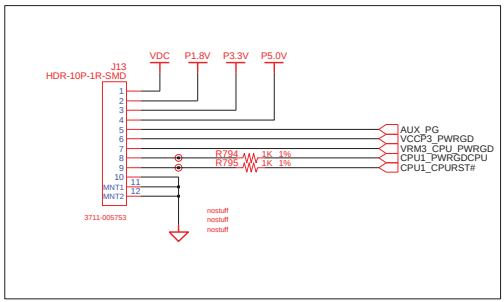

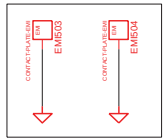

Add for EMC ('08.04.22)

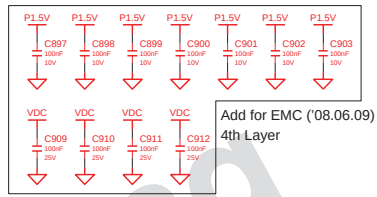

Add for EMC ('08.06.09)
4th Layer

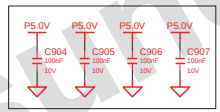

Add for EMC ('08.06.09)
Bottom Side

For Debugging

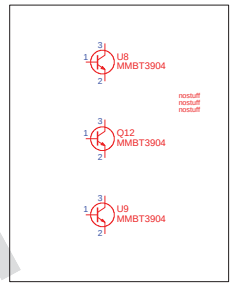

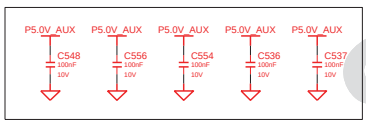

Add for EMC ('08.01.16)
5th Layer

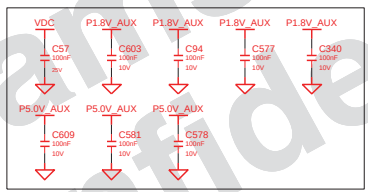

Add for EMC ('08.01.16)
Bottom Side

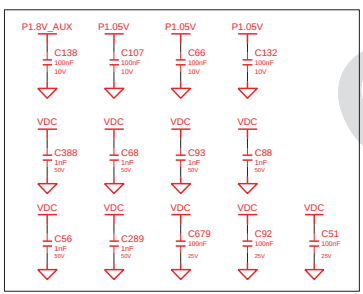

Add for EMC ('08.01.16)
Top Side

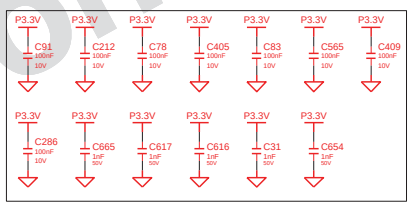

Add for EMC ('08.03.05)

System

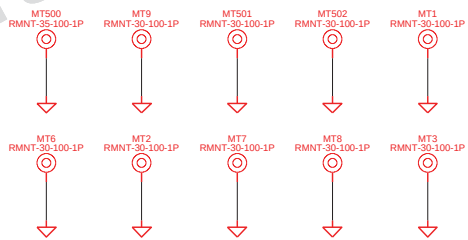

Board

Keyboard

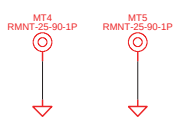

Samsung Confidential

http://hobi-elektronika.net

DRAW TERMI	DATE 1/10/2008	TITLE ISTANBUL	SAMSUNG ELECTRONICS
CHECK HJ KIM	DEV. STEP PV		
APPROVAL SJ PARK	REV 00	ICT PORT	PART NO. BA41-00920A
MODULE CODE undefined	LAST EDIT July 18, 2008 13:52:45 PM		PAGE 16 OF 19

SAMSUNG PROPRIETARY
THIS DOCUMENT CONTAINS CONFIDENTIAL PROPRIETARY INFORMATION THAT IS SAMSUNG ELECTRONICS CO'S PROPERTY. DO NOT DISCLOSE TO OR DUPLICATE FOR OTHERS EXCEPT AS AUTHORIZED BY SAMSUNG.

Sub Board Connector (Istanbul Only)

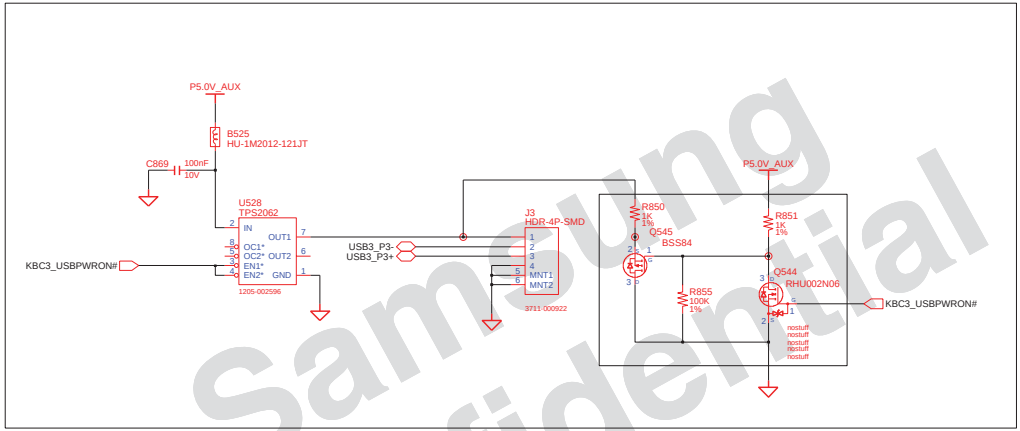

Samsung Confidential

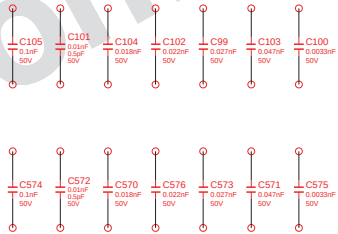

PCB REVISION CONTROL (ICT)				
NO	CONNECTION	DATE(YY/MM/DD)	REVISION	STEP
1	N.C.			
2	1-2			
3	2-3			
4	3-1			
5	1-2-3			
6	N.C.			
7	1-2			
8	2-3			
9	3-1			
10	1-2-3			

DRAW: TERMI	DATE: 1/10/2008	TITLE: ISTANBUL TP	SAMSUNG ELECTRONICS
CHECK: HJ KIM	DEV. STEP: PV		
APPROVAL: SJ PARK	REV: 00		PART NO.: BA41-00920A
MODULE CODE: undefined	LAST EDIT: July 18, 2008 13:52:45 PM	PAGE 17 OF 19	

http://hobi-elektronika.net

SAMSUNG PROPRIETARY
THIS DOCUMENT CONTAINS CONFIDENTIAL PROPRIETARY INFORMATION THAT IS SAMSUNG ELECTRONICS CO'S PROPERTY. DO NOT DISCLOSE TO OR DUPLICATE FOR OTHERS EXCEPT AS AUTHORIZED BY SAMSUNG.

Sub Board (Istanbul only)

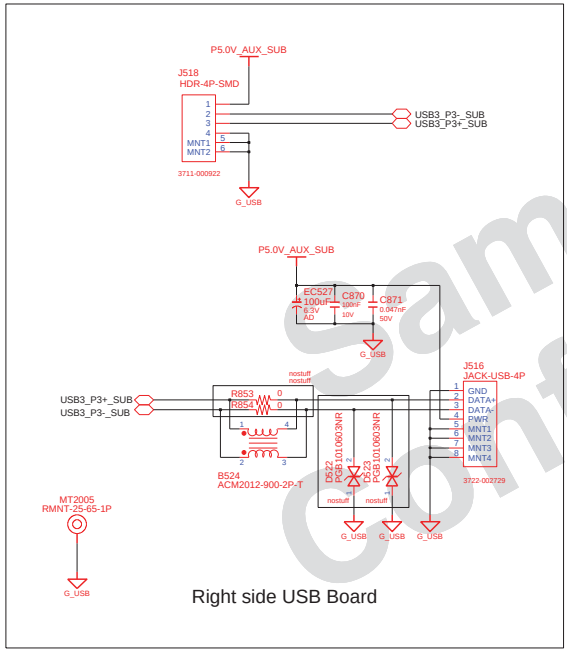

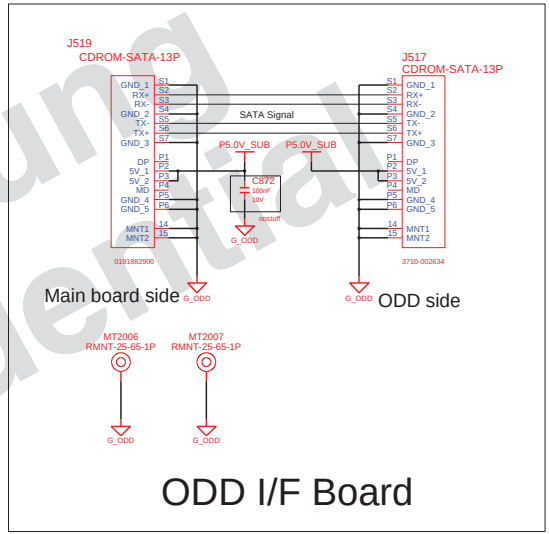

Samsung Confidential

http://hobi-elektronika.net

DESIGN: TERMI	DATE: 3/28/2008	TITLE: ISTANBUL SUB BOARD USB, ODD	SAMSUNG ELECTRONICS
CHECK: HJ KIM	DEV. STEP: PV		
APPROVAL: SJ PARK	REV: 00		PART NO.: BA41-00920A
MODULE CODE	LAST EDIT: July 18, 2008 13:52:45 PM		PAGE 18 OF 19

SAMSUNG PROPRIETARY

THIS DOCUMENT CONTAINS CONFIDENTIAL PROPRIETARY INFORMATION THAT IS SAMSUNG ELECTRONICS CO'S PROPERTY. DO NOT DISCLOSE TO OR DUPLICATE FOR OTHERS EXCEPT AS AUTHORIZED BY SAMSUNG.

AUX_PG
CTRL_12
SPK5_L+
SPK5_L-
SPK5_R+
SPK5_R-
VRM_PRM
CPU1_NMI
CPU1_TCK
CPU1_TDI
CPU1_TMS
CRT3_RED
FAN5_VDD
SMB3_DATA
SPI3_CS0#
SPI3_MISO
SPI3_MOSI
THM3_STP#
VRM_ISEN1
VRM_ISEN2
WLON_LED#
AUD3_SHDN#
EXP3_CPPE#
KBC3_CHGEN
KBC3_PWRGD
KBC3_PWRON
KBC5_TDATA
CPU1_TRDY#
CPU1_TRST#
CRT3_GREEN
CRT3_HSYNC
CRT3_VSYNC
CRT5_HSYNC
CRT5_VSYNC
CPU1_HITM#
CPU1_INIT#
CPU1_LOCK#
SMB3_CLK
SPI3_CLK
PEX3_WAKE#
AUD3_GPIO0#
AUD3_GPIO1#
AUD5_SENS_A
BAT3_SMCLK#
CHP3_GPIO18
CHP3_GPIO20
CHP3_SERIRQ
CHP3_SLPS3#
CHP3_SLPS4#
CHP3_SLPS5#
CLK3_ICH14
CLK3_PWRGD
CLK3_USB48
VRM_VSUM
AUD13_SEL#
AUD3_BEEP
AUD3_SPKR

CLK3_FM48
CPU1_ADS#
CPU1_BNR#
CPU1_HIT#
CPU1_INTR
CPU1_PSI#
CPU1_RS0#
CPU1_RS1#
CPU1_RS2#
CPU1_SLP#
CPU1_SMI#
CRT3_BLUE
CTRL18_25
KBC3_A20G
KBC3_RST#
KBC3_VRON
KBC5_TCLK
CLK3_DBGLPC
LCD3_BRIT
MCD3_SDWP

CPU1_IGNNE#
CPU1_VID(0)
CPU1_VID(1)
CPU1_VID(2)
CPU1_VID(3)
CPU1_VID(4)
CPU1_VID(5)
CPU1_VID(6)
CRT3_DDCCLK
CRT5_DDCCLK
EXP3_CPUSB#
EXP3_PERST#
MEM1_VREF
PLT3_RST#
CPU1_DEFER#
CPU1_DPSLP#
KBC3_BKLTON
KBC3_PRECHG
KBC3_PWRSW#
KBC3_RFOFF#
KBC3_SCLED#
KBC3_SMCLK#
KBC3_SUSPWR
KBC5_KSI(0)
KBC5_KSI(1)
KBC5_KSI(2)
KBC5_KSI(3)
KBC5_KSI(4)
KBC5_KSI(5)
KBC5_KSI(6)
KBC5_KSI(7)
KBC5_KSO(0)
KBC5_KSO(1)
KBC5_KSO(2)
KBC5_KSO(3)
KBC5_KSO(4)
KBC5_KSO(5)
KBC5_KSO(6)
KBC5_KSO(7)
KBC5_KSO(8)
KBC5_KSO(9)
LAN3_VPDCLK
LCD3_BKLTON
LPC3_LAD(0)
LPC3_LAD(1)
LPC3_LAD(2)
LPC3_LAD(3)
MCD3_SDCMD0
PEG3_BKLTEN
CPU1_A20M#
CPU1_BPRI#
CPU1_BREQ#
CPU1_BSEL0
CPU1_BSEL2
MCD3_SDCD#
MCD3_SDCLK
MCH1_HVREF
CPU1_FERR#
SMB3_ALERT#
THM3_ALERT#
T_L_BUTTON#
T_R_BUTTON#
VCCP3_PWRGD
BAT3_DETECT#
BAT3_SMDAT#
CHP3_BIOSWP#
CHP3_CPUSTP#
CHP3_PCISTP#
CHP3_RTCRST#
CLK3_PCLKICH
CPU1_CPURST#
CPU1_DPRSTP#
CPU1_DBSY#
CPU1_DPWR#
CPU1_DRDY#
KBC5_KSO(14)
KBC5_KSO(15)
LAN3_VPDDATA

CPU1_STPCLK#
CPU2_THERMDA
CPU2_THERMDC
CRT3_DDCDATA
CRT5_DDCDATA
EXP3_CLKREQ#
FAN3_FDBACK#
HDA3_AUD_SDO
HDA3_MDC_SDO
KBC3_CPURST#
KBC3_EXTSMI#
KBC3_NUMLED#
KBC3_PWRBTN#
KBC3_RSMRST#
KBC3_RUNSCI#
KBC3_SMDATA#
KBC3_SPKMUTE
KBC5_KSO(10)
KBC5_KSO(11)
KBC5_KSO(12)
KBC5_KSO(13)
LID3_SWITCH#
LOM3_CLKREQ#
LPC3_LFRAME#
MCD3_SDDATA0
MCD3_SDDATA1
MCD3_SDDATA2
MCD3_SDDATA3
MCH1_HXSWING
MCH3_CLKREQ#
MCH3_EXTTS0#
MCH3_EXTTS1#
MMA3_CLKREQ#
PCI3_CLKRUN#
AUD5_SENS_HP#
CHP3_CL_CLK_0
CHP3_DPRSLPVR
CHP3_PM_SYNC#
CHP3_SATALED#
PEG5_HDMI_CLK
PLT3_RST_ORG#
PEG3_HPD_HDMI
AUD5_HP_O_LEFT
AUD5_MIC1_LEFT
AUD5_MIC2_LEFT
AUD5_MIC2_VREF
AUD5_SENS_MIC#
CHP3_BIOS_CR#
CHP3_CL_DATA_0
CHP3_CL_RST_0#
CHP3_INTRUDER#

CLK3_PCLKMICOM
CPU1_THRMTRIP#
CPU3_THRMTRIP#
HDA3_HDMI_BCLK
HDA3_HDMI_RST#
HDA3_HDMI_SDI2
HDA3_HDMI_SYNC
ITP3_DBRRESET#
KBC3_CHKPWRSW#
KBC3_LED_ACIN#
LCD3_EDID_DATA
CPU1_PWRGDCPU
CPU1_VCCSENSE
CPU1_VSSSENSE
HDA3_AUD_BCLK
HDA3_AUD_RST#
HDA3_AUD_SDI0
HDA3_AUD_SYNC
HDA3_HDMI_SDO
HDA3_MDC_BCLK
HDA3_MDC_RST#
HDA3_MDC_SDI1
HDA3_MDC_SYNC
KBC3_CAPSLED#
KBC3_WAKES0#
LCD3_EDID_CLK

CHP3_SUSSTAT#
PEG5_HDMI_CLK
MCH3_ICHSYNC#
PEG3_LCDVDDON
KBC3_BLCKPWRSW#
KBC3_LED_POWER#
KBC3_PWRON_INV#
AUD5_LINE_O_LEFT
CHP3_SATACLKREQ#
KBC3_LED_CHARGE#
KBC3_THERM_SMCLK

AUD5_LINE_O_RIGHT
VRM3_CPU_PWRGD
AUD5_HP_O_RIGHT
AUD5_MIC1_RIGHT
AUD5_MIC2_RIGHT
CHP3_ME_RTCRST#
PEG5_HDMI_DATA
KBC3_THERM_SMDATA
AUD5_MIC1_VREF_LEFT
AUD5_MIC1_VREF_RIGHT

P3.3V_AUX
P3.3V_AUX
P3.3V_AUX
P3.3V_AUX

VCC_CRT

VDC_CHG

VDC_INV
VDC_INV
VDC_INV
VDC_INV

VDC_ADPT

P3.3V_AUX_EXP

P1.8V_P2.5V_LAN

VDC
VDC
VDC
VDC

VREF
VREF
VREF
VREF

V5FILT

P3.3V_MICOM

P4.75V_AUD

P5.0V_AUX
P5.0V_AUX
P5.0V_AUX
P5.0V_AUX

P1.05V_PEG

P12.0V_ALW

CPU_CORE
CPU_CORE
CPU_CORE
CPU_CORE

G_AUD

G_CHG

G_CPU

G_DDR

G_MIC

GROUND
GROUND
GROUND
GROUND
GROUND
GROUND
GROUND
GROUND
GROUND
GROUND

G_P3.3V

G_P1.05V

LCD_VDD3V

P0.9V
P0.9V
P0.9V
P0.9V

TP2518 P1.1V
TP2526 P1.1V
TP2527 P1.1V
TP2514 P1.1V

P3.3V
P3.3V
P3.3V
P3.3V

P5.0V
P5.0V
P5.0V
P5.0V

P1.05V
P1.05V
P1.05V
P1.05V

PRTC_BAT

P1.2V_LAN
P1.2V_LAN
P1.2V_LAN
P1.2V_LAN

TP2517 P1.5V
TP2525 P1.5V
TP2515 P1.5V
TP2516 P1.5V

P1.5V_EXP
P1.5V_EXP
P1.5V_EXP
P1.5V_EXP

P1.8V_AUX
P1.8V_AUX
P1.8V_AUX
P1.8V_AUX

P3.3V_EXP

P3.3V_MCD

P5.0V_ALW

P5.0V_AUD

P5.0V_AMP

P5.0V_AUX_USB

TP2506 EGFX_CORE
TP2507 EGFX_CORE
TP2508 EGFX_CORE
TP2504 EGFX_CORE

TP2505 P1.8V
TP2502 P1.8V
TP2503 P1.8V
TP2509 P1.8V

Samsung Confidential

http://hobi-elektronika.net

DESIGN: TERMI	DATE: 1/10/2008	TITLE: ISTANBUL TP UNDEFINED	SAMSUNG ELECTRONICS
CHECK: HJ KIM	DEV. STEP: PV		
APPROVAL: SJ PARK	REV: 00		PART NO. BA41-00920A
MODULE CODE	LAST EDIT: July 18, 2008 13:52:45 PM		PAGE 19 OF 19

SAMSUNG PROPRIETARY

THIS DOCUMENT CONTAINS CONFIDENTIAL PROPRIETARY INFORMATION THAT IS SAMSUNG ELECTRONICS CO'S PROPERTY. DO NOT DISCLOSE TO OR DUPLICATE FOR OTHERS EXCEPT AS AUTHORIZED BY SAMSUNG.

FSA BSEL0	FSB BSEL1	FSC BSEL2	HOST CLK
0	0	0	266 MHz
0	0	1	333 MHz
0	1	0	200 MHz
0	1	1	400 MHz
1	0	0	133 MHz
1	0	1	100 MHz
1	1	0	166 MHz
1	1	1	RSVD

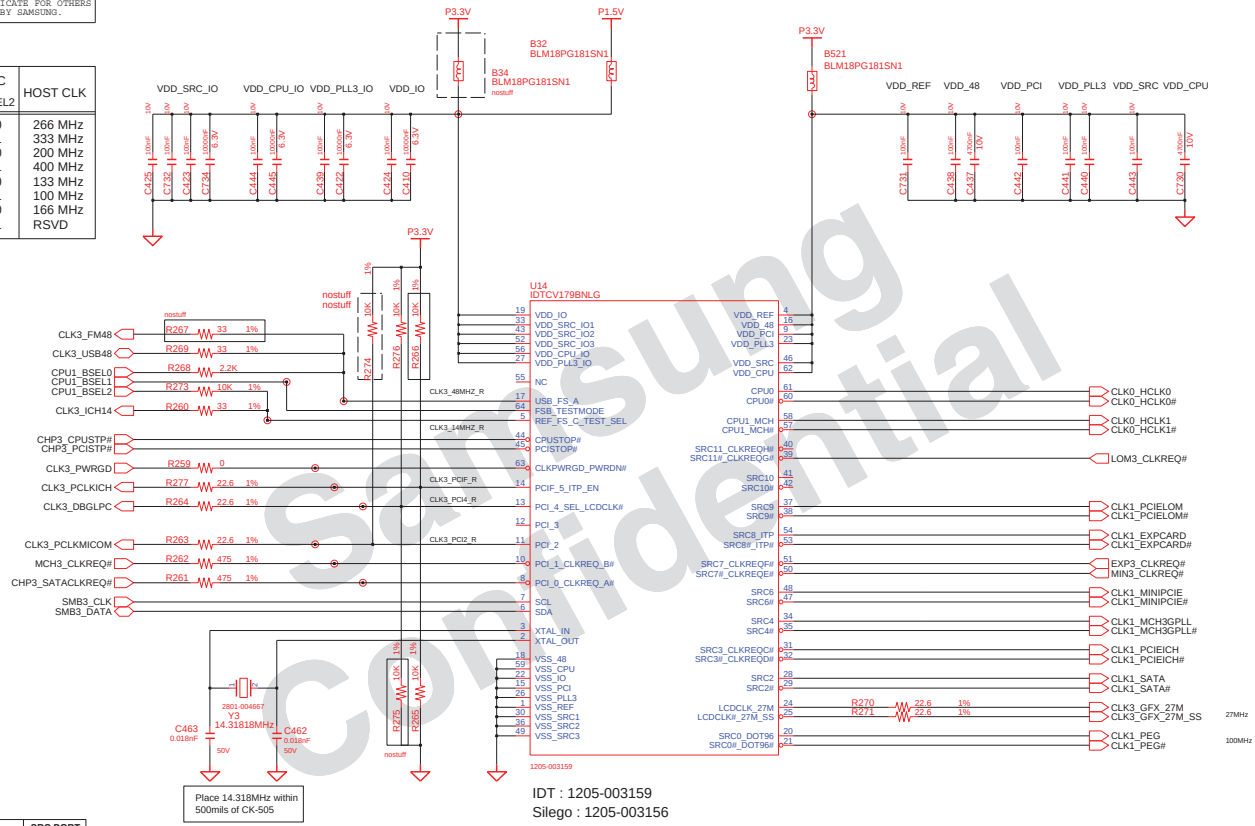

IDT : 1205-003159
Silego : 1205-003156
Spectra Linear : 1205-003533

This part is 64pin QFN package.

CLK REQ	DEVICE	SRC PORT
CLK REQ A	SATA	SRC2
CLK REQ B	GMCH	SRC4
CLK REQ E	MINI CARD	SRC6
CLK REQ F	LOM3_CLKREQ#	SRC8

SEL_LCDCLK*	Pin 20/21	Pin 24/25
LOW	DOT_96/DOT_96#	PEG_CLK/PEG_CLK#
HIGH	SRC_0/SRC_0#	27M & 27M_SS

Samsung Confidential

http://hobi-elektronika.net

DRAW: TERMI	DATE: 1/10/2008	TITLE: ISTANBUL Main_Clock_Circuit CK_Clock_505M	SAMSUNG ELECTRONICS
CHECK: HJ KIM	DEV. STEP: PV		
APPROVAL: SJ PARK	REV: 00		PART NO. BA41-00920A
MODULE CODE: undefined	LAST EDIT: July 18, 2008 13:52:45 PM		PAGE 21 OF 64

SAMSUNG PROPRIETARY
THIS DOCUMENT CONTAINS CONFIDENTIAL PROPRIETARY INFORMATION THAT IS SAMSUNG ELECTRONICS CO'S PROPERTY. DO NOT DISCLOSE TO OR DUPLICATE FOR OTHERS EXCEPT AS AUTHORIZED BY SAMSUNG.

THERMAL SENSOR & FAN CONTROL

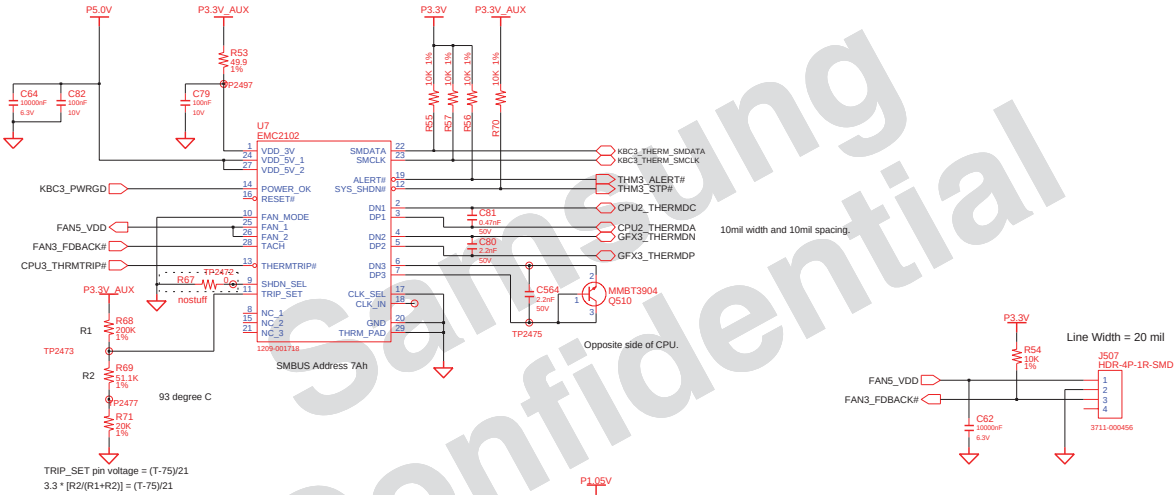

RHE Support (Top)

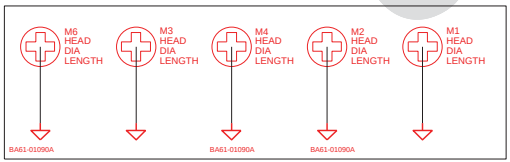

M6
Internal : nostuff
External : stuff

http://hobi-elektronika.net

Samsung Confidential

DRAW TERMI	DATE 1/10/2008	TITLE ISTANBUL	SAMSUNG ELECTRONICS
CHECK HJ KIM	DEV. STEP PV	Thermal_Sensor_SMSC_Emc2102	
APPROVAL SJ PARK	REV 00	Thermal_Sensor_SMSC_Emc2102	PART NO. BA41-00920A
MODULE CODE	LAST EDIT July 18, 2008 13:52:45 PM		PAGE 61 OF 64

SAMSUNG PROPRIETARY
THIS DOCUMENT CONTAINS CONFIDENTIAL PROPRIETARY INFORMATION THAT IS SAMSUNG ELECTRONICS CO'S PROPERTY. DO NOT DISCLOSE TO OR DUPLICATE FOR OTHERS EXCEPT AS AUTHORIZED BY SAMSUNG.

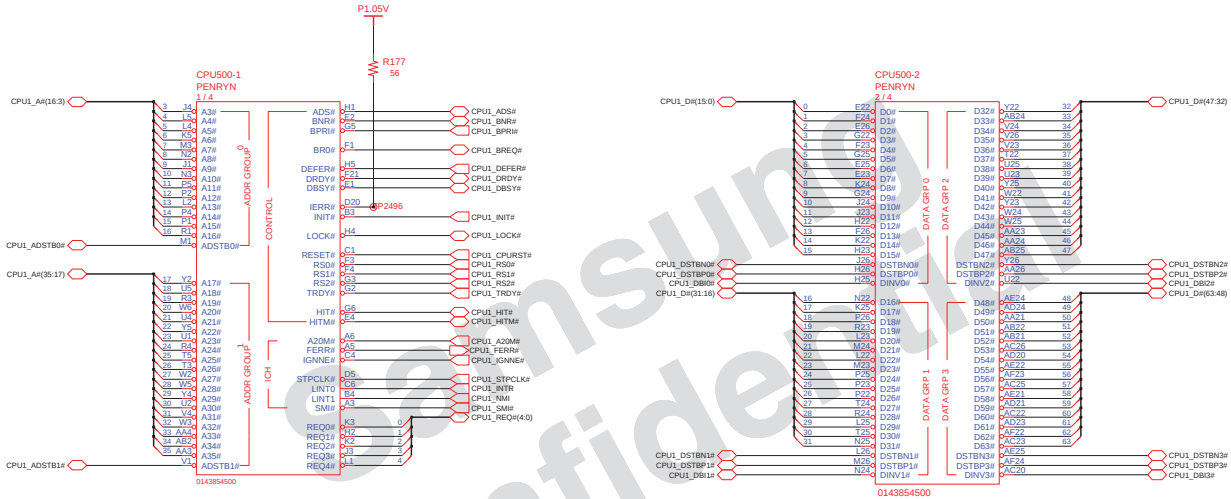

CPU Socket : 3704-001153

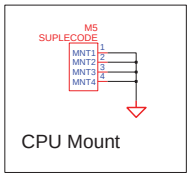

Samsung Confidential

http://hobi-elektronika.net

DRAW: TERMI	DATE: 1/10/2008	TITLE: ISTANBUL CPU PENRYN (1/3)	SAMSUNG ELECTRONICS
CHECK: HJ KIM	DEV. STEP: PV		
APPROVAL: SJ PARK	REV: 00		PART NO. BA41-00920A
MODULE CODE: undefined	LAST EDIT: July 18, 2008 13:52:45 PM		PAGE 22 OF 64

SAMSUNG PROPRIETARY

THIS DOCUMENT CONTAINS CONFIDENTIAL PROPRIETARY INFORMATION THAT IS SAMSUNG ELECTRONICS CO'S PROPERTY. DO NOT DISCLOSE TO OR DUPLICATE FOR OTHERS EXCEPT AS AUTHORIZED BY SAMSUNG.

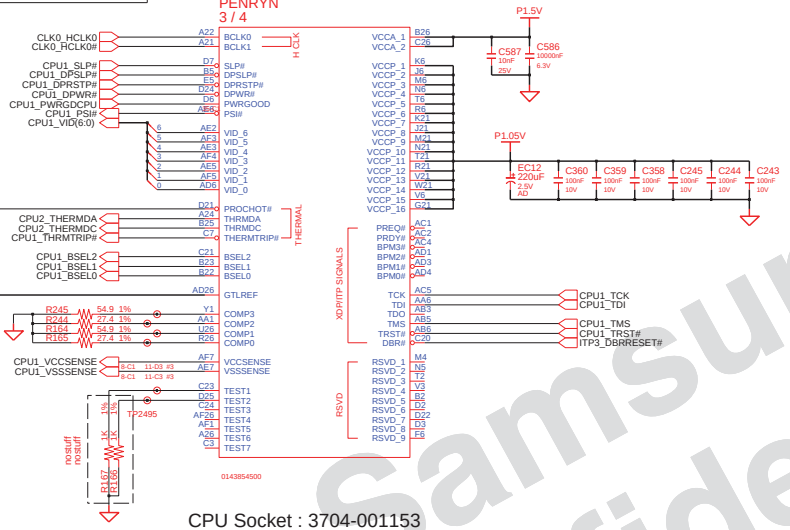

CPU Socket : 3704-001153

FSC	FSB	FSA	FRQ
0	0	0	266M
0	1	0	200M
0	1	1	166M

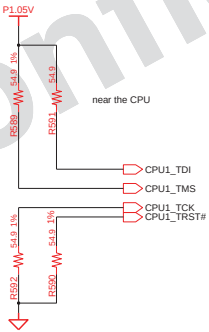

CPU Core Voltage Table

IMVP-6

Active Mode VID(6:0)	Voltage	Active/Deeper Sleep Dual Mode Region VID(6:0)	Voltage	Deeper Sleep/Extended Deeper Sleep Dual Mode Region VID(6:0)	Voltage
0 0 0 0 0 0 0	1.5000 V	0 1 0 1 0 0 0	1.0000 V	1 0 1 0 0 0 1	0.4875 V
0 0 0 0 0 0 1	1.4875 V	0 1 0 1 0 0 1	0.9875 V	1 0 1 0 0 1 0	0.4750 V
0 0 0 0 0 1 0	1.4750 V	0 1 0 1 0 1 0	0.9750 V	1 0 1 0 0 1 1	0.4625 V
0 0 0 0 0 1 1	1.4625 V	0 1 0 1 0 1 1	0.9625 V	1 0 1 0 1 0 0	0.4500 V
0 0 0 0 1 0 0	1.4500 V	0 1 0 1 1 0 0	0.9500 V	1 0 1 0 1 0 1	0.4375 V
0 0 0 0 1 0 1	1.4375 V	0 1 0 1 1 0 1	0.9375 V	1 0 1 0 1 1 0	0.4250 V
0 0 0 0 1 1 0	1.4250 V	0 1 0 1 1 1 0	0.9250 V	1 0 1 0 1 1 1	0.4125 V
0 0 0 0 1 1 1	1.4125 V	0 1 0 1 1 1 1	0.9125 V	1 0 1 0 0 0 0	0.4000 V
0 0 0 1 0 0 0	1.4000 V	0 1 1 0 0 0 0	0.9000 V	1 0 1 1 0 0 1	0.3875 V
0 0 0 1 0 0 1	1.3875 V	0 1 1 0 0 0 1	0.8875 V	1 0 1 1 0 1 0	0.3750 V
0 0 0 1 0 1 0	1.3750 V	0 1 1 0 0 1 0	0.8750 V	1 0 1 1 0 1 1	0.3625 V
0 0 0 1 0 1 1	1.3625 V	0 1 1 0 0 1 1	0.8625 V	1 0 1 1 1 0 0	0.3500 V
0 0 0 1 1 0 0	1.3500 V	0 1 1 0 1 0 0	0.8500 V	1 0 1 1 1 0 1	0.3375 V
0 0 0 1 1 0 1	1.3375 V	0 1 1 0 1 0 1	0.8375 V	1 0 1 1 1 1 0	0.3250 V
0 0 0 1 1 1 0	1.3250 V	0 1 1 0 1 1 0	0.8250 V	1 0 1 1 1 1 1	0.3125 V
0 0 0 1 1 1 1	1.3125 V	0 1 1 0 1 1 1	0.8125 V	1 1 0 0 0 0 0	0.3000 V
0 0 1 0 0 0 0	1.3000 V	0 1 1 1 0 0 0	0.8000 V	1 1 0 0 0 0 1	0.2875 V
0 0 1 0 0 0 1	1.2875 V	0 1 1 1 0 0 1	0.7875 V	1 1 0 0 0 1 0	0.2750 V
0 0 1 0 0 1 0	1.2750 V	0 1 1 1 0 1 0	0.7750 V	1 1 0 0 0 1 1	0.2625 V
0 0 1 0 0 1 1	1.2625 V	0 1 1 1 0 1 1	0.7625 V	1 1 0 0 1 0 0	0.2500 V
0 0 1 0 1 0 0	1.2500 V	0 1 1 1 1 0 0	0.7500 V	1 1 0 0 1 0 1	0.2375 V
0 0 1 0 1 0 1	1.2375 V	0 1 1 1 1 0 1	0.7375 V	1 1 0 0 1 1 0	0.2250 V
0 0 1 0 1 1 0	1.2250 V	0 1 1 1 1 1 0	0.7250 V	1 1 0 0 1 1 1	0.2125 V
0 0 1 0 1 1 1	1.2125 V	0 1 1 1 1 1 1	0.7125 V	1 1 0 1 0 0 0	0.2000 V
0 0 1 1 0 0 0	1.2000 V	1 0 0 0 0 0 0	0.7000 V	1 1 0 1 0 0 1	0.1875 V
0 0 1 1 0 0 1	1.1875 V	1 0 0 0 0 0 1	0.6875 V	1 1 0 1 0 1 0	0.1750 V
0 0 1 1 0 1 0	1.1750 V	1 0 0 0 0 1 0	0.6750 V	1 1 0 1 0 1 1	0.1625 V
0 0 1 1 0 1 1	1.1625 V	1 0 0 0 0 1 1	0.6625 V	1 1 0 1 1 0 0	0.1500 V
0 0 1 1 1 0 0	1.1500 V	1 0 0 0 1 0 0	0.6500 V	1 1 0 1 1 0 1	0.1375 V
0 0 1 1 1 0 1	1.1375 V	1 0 0 0 1 0 1	0.6375 V	1 1 0 1 1 1 0	0.1250 V
0 0 1 1 1 1 0	1.1250 V	1 0 0 0 1 1 0	0.6250 V	1 1 0 1 1 1 1	0.1125 V
0 0 1 1 1 1 1	1.1125 V	1 0 0 0 1 1 1	0.6125 V	1 1 1 0 0 0 0	0.1000 V
0 1 0 0 0 0 0	1.1000 V	1 0 0 1 0 0 0	0.6000 V	1 1 1 0 0 0 1	0.0875 V
0 1 0 0 0 0 1	1.0875 V	1 0 0 1 0 0 1	0.5875 V	1 1 1 0 0 1 0	0.0750 V
0 1 0 0 0 1 0	1.0750 V	1 0 0 1 0 1 0	0.5750 V	1 1 1 0 0 1 1	0.0625 V
0 1 0 0 0 1 1	1.0625 V	1 0 0 1 0 1 1	0.5625 V	1 1 1 0 1 0 0	0.0500 V
0 1 0 0 1 0 0	1.0500 V	1 0 0 1 1 0 0	0.5500 V	1 1 1 0 1 0 1	0.0375 V
0 1 0 0 1 0 1	1.0375 V	1 0 0 1 1 0 1	0.5375 V	1 1 1 0 1 1 0	0.0250 V
0 1 0 0 1 1 0	1.0250 V	1 0 0 1 1 1 0	0.5250 V	1 1 1 0 1 1 1	0.0125 V
0 1 0 0 1 1 1	1.0125 V	1 0 0 1 1 1 1	0.5125 V	1 1 1 1 0 0 0	0.0000 V
		1 0 1 0 0 0 0	0.5000 V	1 1 1 1 0 0 1	0.0000 V
				1 1 1 1 0 1 0	0.0000 V
				1 1 1 1 0 1 1	0.0000 V
				1 1 1 1 1 0 0	0.0000 V
				1 1 1 1 1 0 1	0.0000 V
				1 1 1 1 1 1 0	0.0000 V
				1 1 1 1 1 1 1	0.0000 V

Active	
DPRSLPVR	0
DPRSTP*	1
PSI2*	0 or 1

Deeper Slp	
DPRSLPVR	1
DPRSTP*	0
PSI2*	0 or 1

"1111111" : 0V power good asserted.

*Yonah Processor (2.33 GHz / 800 MHz : TBD)

GTLREF : Keep the Voltage divider within 0.5" of the first GTLREF0 pin with Zo=55ohm trace. Minimize coupling of any switching signals to this net.

COMP0,2(COMP1,3) should be connected with Zo=27.4ohm(55ohm) trace shorter than 1/2" to their respective Banias socket pins.

GND test points within 100mil of the VCC/VSSsense at the end of the line. Route the VCC/VSSsense as a Zo=55ohm traces with equal length. Observe 3:1 spacing b/w VCC/VSSsense lines and 25mil away (preferred 50mil) from any other signal. And GND via 100mil away from each of the VCC/VSS test point vias.

DRAW: TERMI	DATE: 1/10/2008	TITLE: ISTANBUL CPU PENRYN (2/3)	SAMSUNG ELECTRONICS
CHECK: HJ KIM	DEV. STEP: PV		
APPROVAL: SJ PARK	REV: 00		PART NO. BA41-00920A
MODULE CODE: undefined	LAST EDIT: July 18, 2008 13:52:45 PM		PAGE 23 OF 64

Samsung Confidential

http://hobi-elektronika.net

SAMSUNG PROPRIETARY

THIS DOCUMENT CONTAINS CONFIDENTIAL PROPRIETARY INFORMATION THAT IS SAMSUNG ELECTRONICS CO'S PROPERTY. DO NOT DISCLOSE TO OR DUPLICATE FOR OTHERS EXCEPT AS AUTHORIZED BY SAMSUNG.

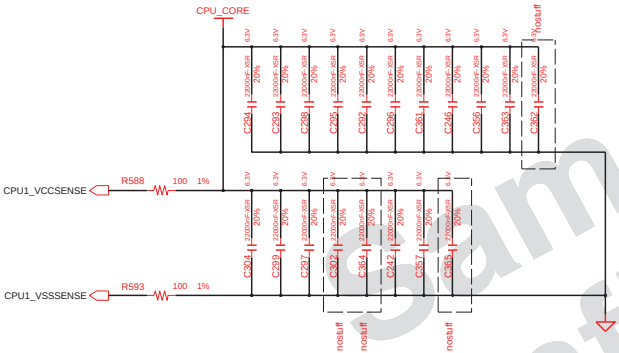

6x 330 uF : CPU VR side

CPU Socket : 3704-001153

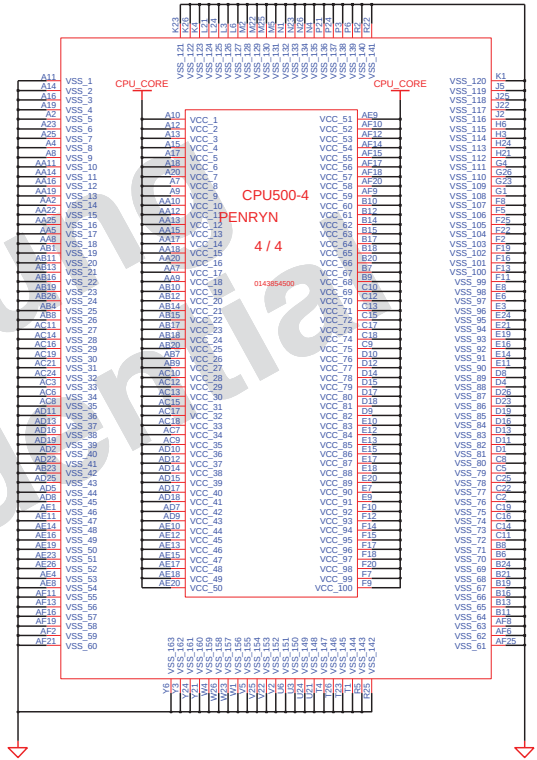

Samsung Confidential

http://hobi-elektronika.net

DRAW: TERMI	DATE: 1/10/2008	TITLE: ISTANBUL CPU PENRYN (3/3)	SAMSUNG ELECTRONICS
CHECK: HJ KIM	DEV. STEP: PV		
APPROVAL: SJ PARK	REV: 00		PART NO. BA41-00920A
MODULE CODE: undefined	LAST EDIT: July 18, 2008 13:52:45 PM		PAGE 24 OF 64

SAMSUNG PROPRIETARY
THIS DOCUMENT CONTAINS CONFIDENTIAL PROPRIETARY INFORMATION THAT IS SAMSUNG ELECTRONICS CO'S PROPERTY. DO NOT DISCLOSE TO OR DUPLICATE FOR OTHERS EXCEPT AS AUTHORIZED BY SAMSUNG.

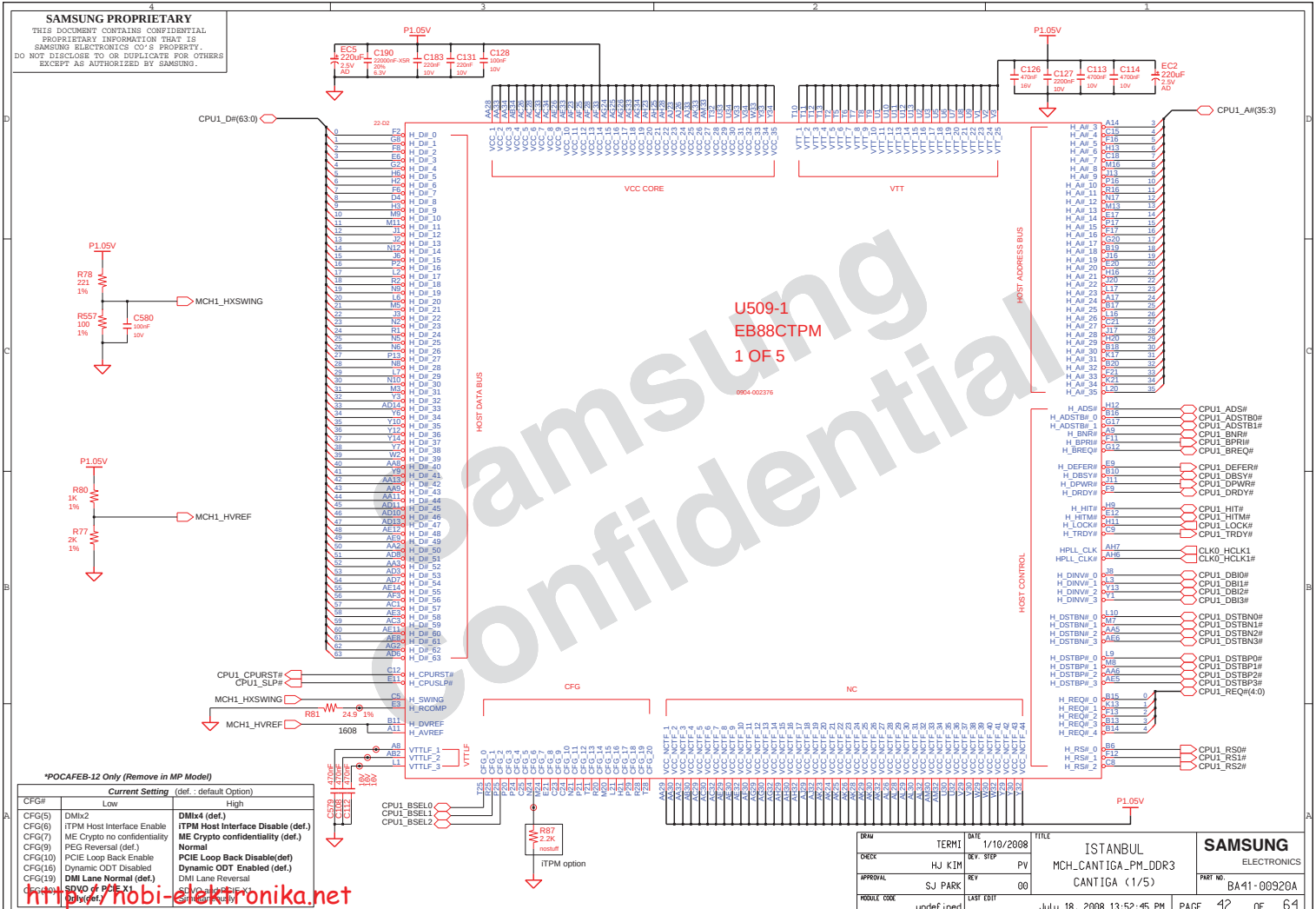

*POCAFEB-12 Only (Remove in MP Model)

CFG#	Current Setting (def. : default Option) Low	High
CFG(5)	DMIx2	**DMIx4 (def.)**
CFG(6)	iTPM Host Interface Enable	**iTPM Host Interface Disable (def.)**
CFG(7)	ME Crypto no confidentiality	**ME Crypto confidentiality (def.)**
CFG(9)	PEG Reversal (def.)	**Normal**
CFG(10)	PCIE Loop Back Enable	**PCIE Loop Back Disable(def)**
CFG(16)	Dynamic ODT Disabled	**Dynamic ODT Enabled (def.)**
CFG(19)	**DMI Lane Normal (def.)**	DMI Lane Reversal
CFG(20)	**SDVO or PCIE X1 Operation (def.)**	SDVO and PCIE X1 Simultaneously

http://nobi-elektronika.net

DRAW: TERMI	DATE: 1/10/2008	TITLE: ISTANBUL MCH_CANTIGA_PM_DDR3 CANTIGA (1/5)	SAMSUNG ELECTRONICS
CHECK: HJ KIM	DEV. STEP: PV		PART NO.: BA41-00920A
APPROVAL: SJ PARK	REV: 00		
MODULE CODE: undefined	LAST EDIT: July 18, 2008 13:52:45 PM		PAGE 42 OF 64

SAMSUNG PROPRIETARY
THIS DOCUMENT CONTAINS CONFIDENTIAL PROPRIETARY INFORMATION THAT IS SAMSUNG ELECTRONICS CO'S PROPERTY. DO NOT DISCLOSE TO OR DUPLICATE FOR OTHERS EXCEPT AS AUTHORIZED BY SAMSUNG.

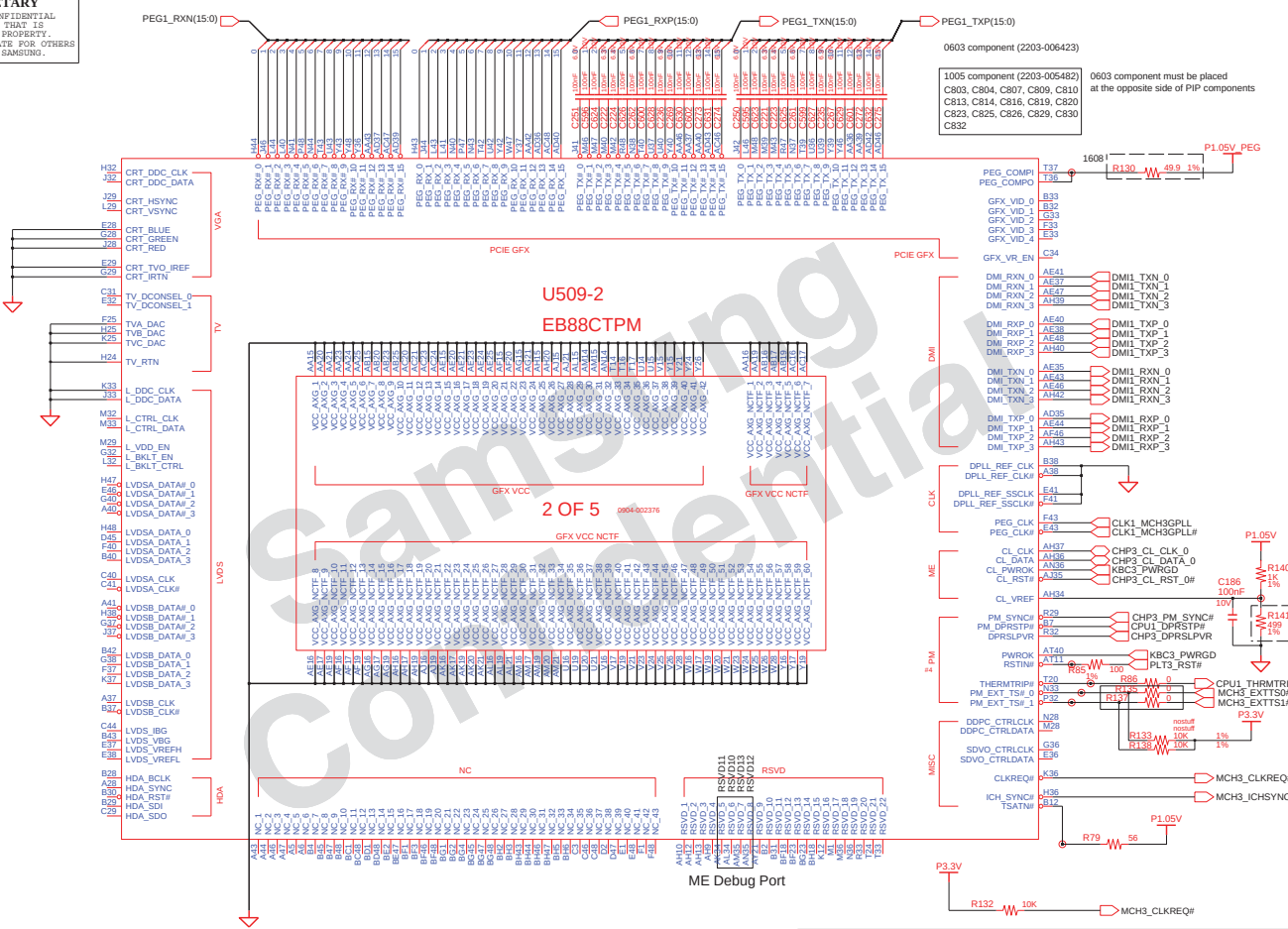

Samsung Confidential

http://hobi-elektronika.net

DRAW: TERMI	DATE: 1/10/2008	TITLE: ISTANBUL MCH_CANTIGA_PM_DDR3 CANTIGA (2/5)	SAMSUNG ELECTRONICS
CHECK: HJ KIM	DEV. STEP: PV		
APPROVAL: SJ PARK	REV: 00		PART NO.: BA41-00920A
MODULE CODE: undefined	LAST EDIT: July 18, 2008 13:52:45 PM		PAGE 43 OF 64

SAMSUNG PROPRIETARY
THIS DOCUMENT CONTAINS CONFIDENTIAL PROPRIETARY INFORMATION THAT IS SAMSUNG ELECTRONICS CO'S PROPERTY. DO NOT DISCLOSE TO OR DUPLICATE FOR OTHERS EXCEPT AS AUTHORIZED BY SAMSUNG.

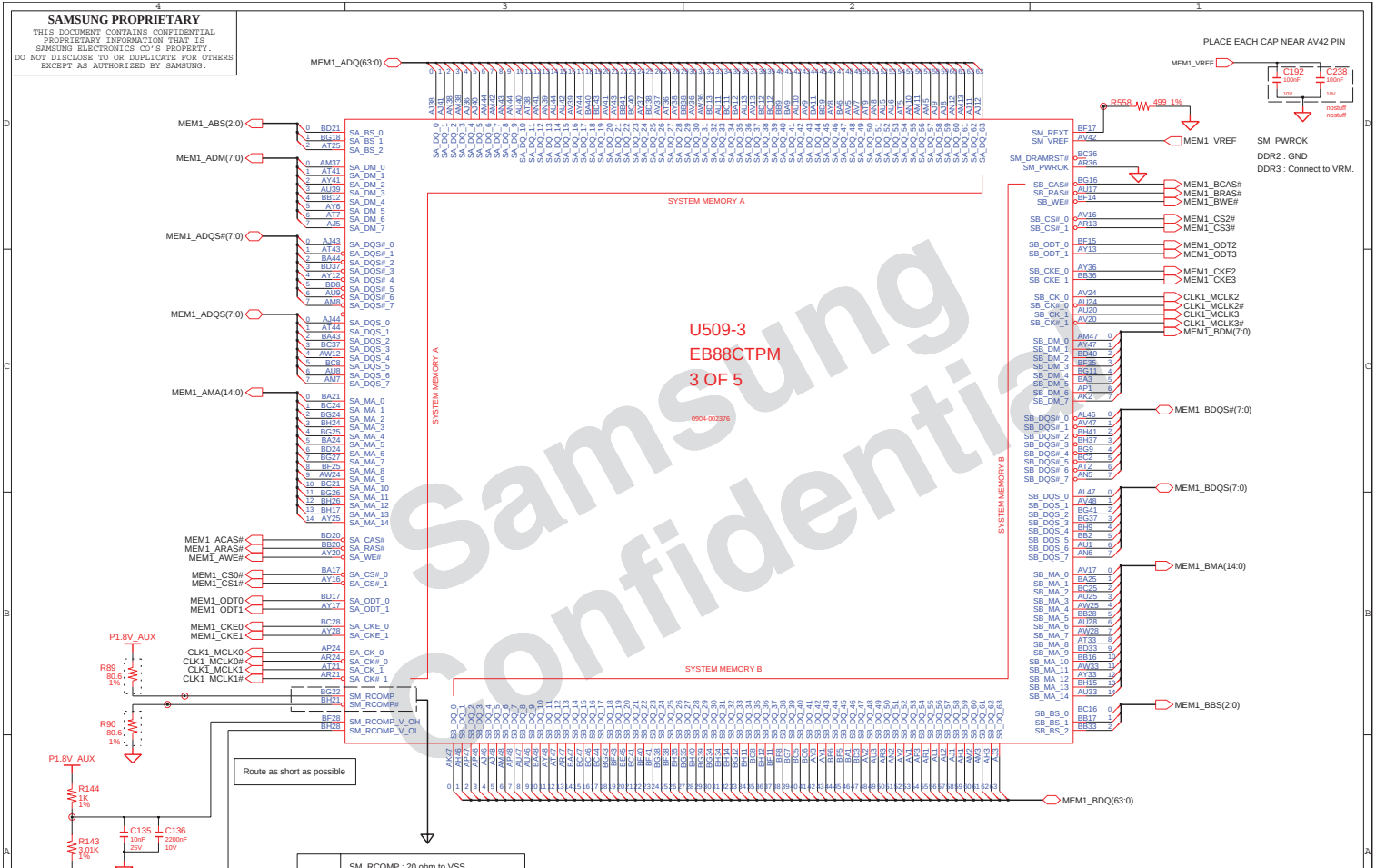

Teenah	SM_RCOMP : 20 ohm to VSS SM_RCOMP# : 20 ohm to P1.8V_AUX
Cantiga	SM_RCOMP : 80 ohm to P1.5V_AUX SM_RCOMP# : 80 ohm to VSS

DRAW: TERMI	DATE: 1/10/2008	TITLE: ISTANBUL MCH_CANTIGA_PM_DDR3 CANTIGA (3/5)	SAMSUNG ELECTRONICS
CHECK: HJ KIM	DEV. STEP: PV		PART NO.: BA41-00920A
APPROVAL: SJ PARK	REV: 00		
MODULE CODE	LAST EDIT	July 18, 2008 13:52:45 PM	PAGE 44 OF 64

Samsung Confidential

http://bobi-elektronika.net

SAMSUNG PROPRIETARY
THIS DOCUMENT CONTAINS CONFIDENTIAL PROPRIETARY INFORMATION THAT IS SAMSUNG ELECTRONICS CO'S PROPERTY. DO NOT DISCLOSE TO OR DUPLICATE FOR OTHERS EXCEPT AS AUTHORIZED BY SAMSUNG.

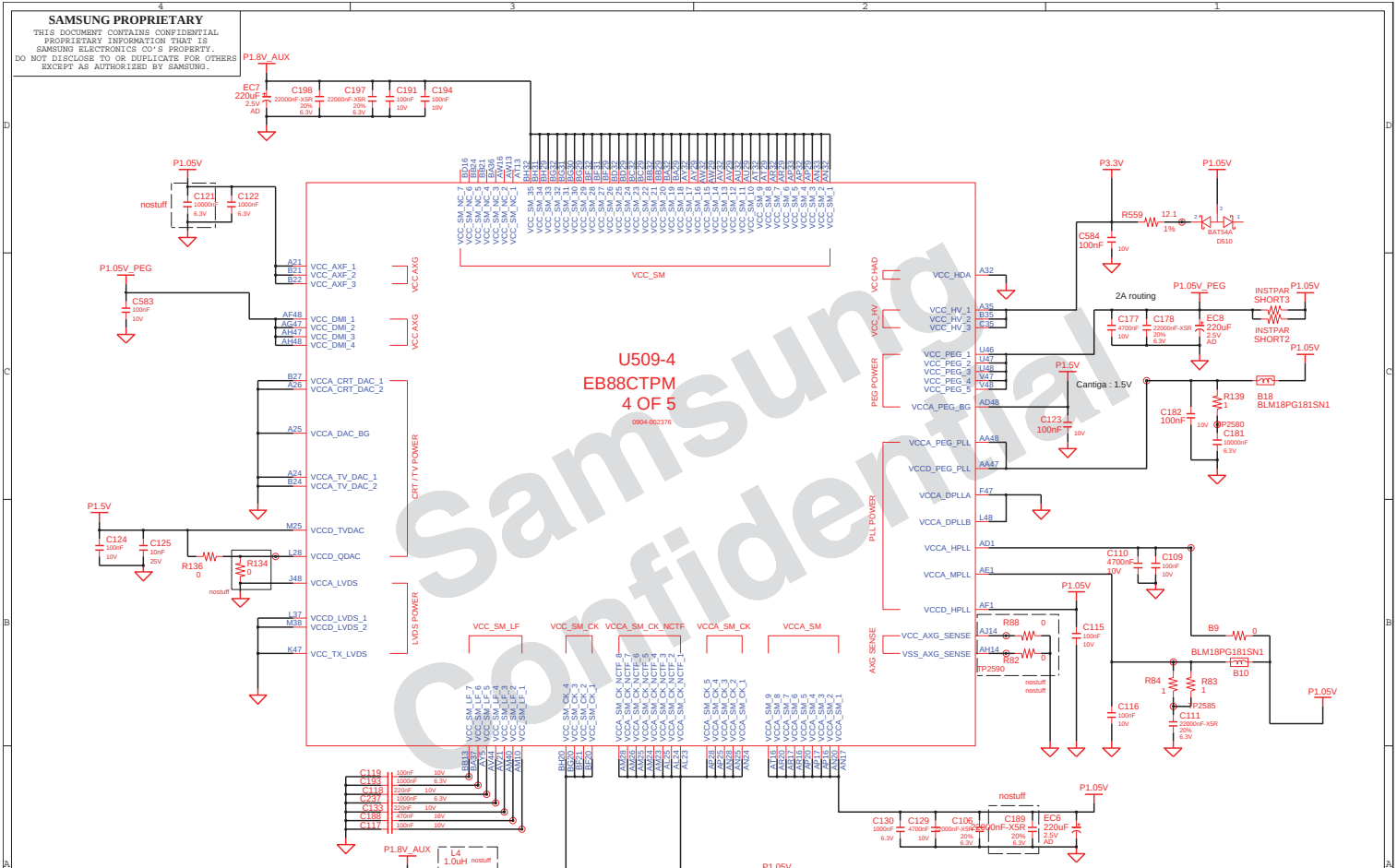

DRAW	TERMI	DATE 1/10/2008	TITLE ISTANBUL MCH_CANTIGA_PM_DDR3 CANTIGA (4/5)
CHECK	HJ KIM	DEV. STEP PV	SAMSUNG ELECTRONICS
APPROVAL	SJ PARK	REV 00	PART NO. BA41-00920A
MODULE CODE		LAST EDIT July 18, 2008 13:52:45 PM	PAGE 45 OF 64

SAMSUNG PROPRIETARY
THIS DOCUMENT CONTAINS CONFIDENTIAL PROPRIETARY INFORMATION THAT IS SAMSUNG ELECTRONICS CO'S PROPERTY. DO NOT DISCLOSE TO OR DUPLICATE FOR OTHERS EXCEPT AS AUTHORIZED BY SAMSUNG.

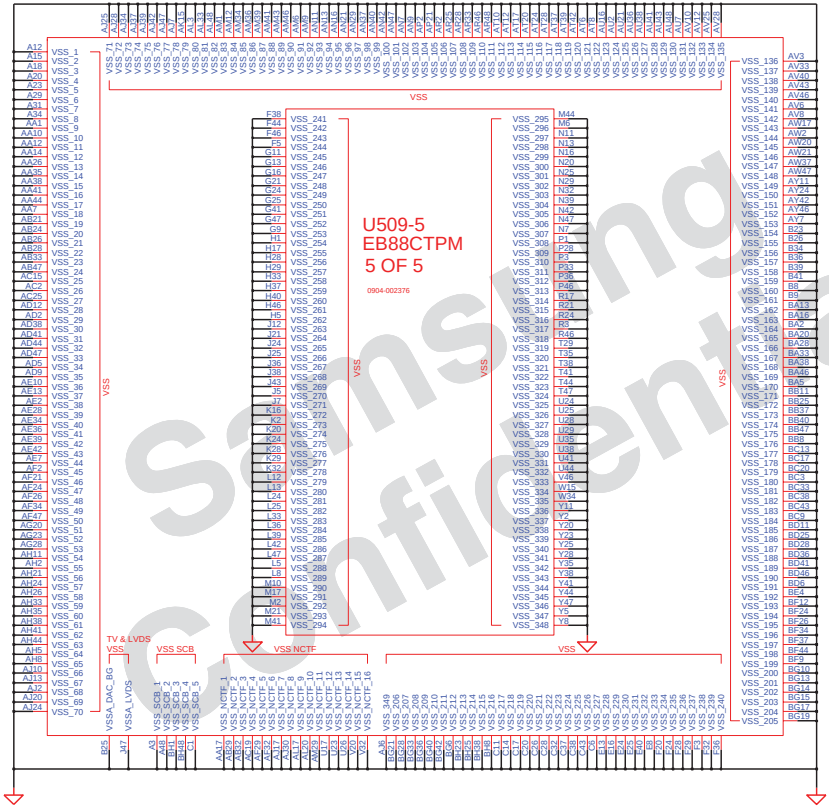

Samsung Confidential

http://hobi-elektronika.net

DRAW TERMI	DATE 1/10/2008	TITLE ISTANBUL MCH_CANTIGA_PM_DDR3 CANTIGA (5/5)	SAMSUNG ELECTRONICS
CHECK HJ KIM	DEV. STEP PV		
APPROVAL SJ PARK	REV 00		PART NO. BA41-00920A
MODULE CODE	LAST EDIT July 18, 2008 13:52:45 PM		PAGE 46 OF 64

SAMSUNG PROPRIETARY
THIS DOCUMENT CONTAINS CONFIDENTIAL PROPRIETARY INFORMATION THAT IS SAMSUNG ELECTRONICS CO'S PROPERTY. DO NOT DISCLOSE TO OR DUPLICATE FOR OTHERS EXCEPT AS AUTHORIZED BY SAMSUNG.

DDR SO-DIMM #0

Height : 5.2mm (Reverse)

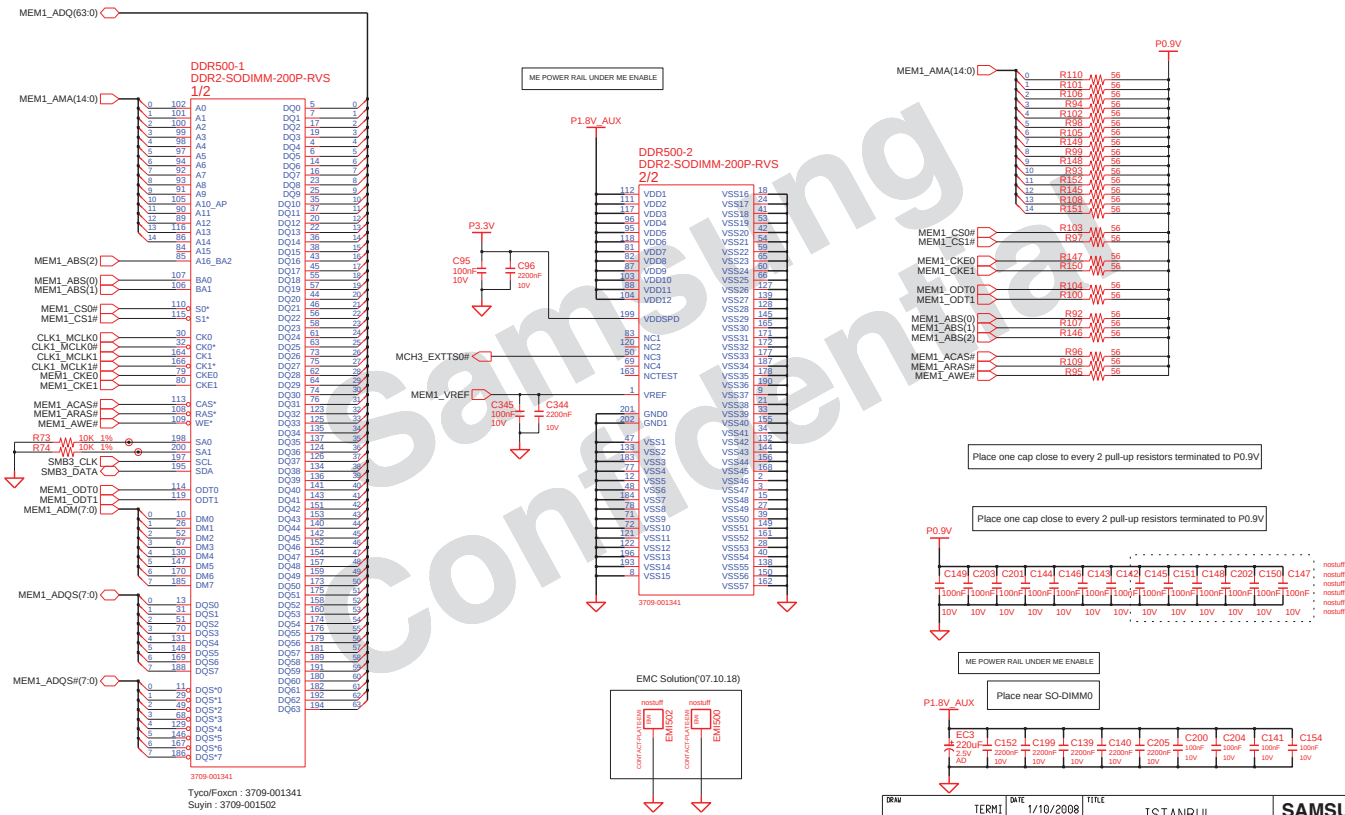

Samsung Confidential

http://hobi-elektronika.net

DRAW TERMI	DATE 1/10/2008	TITLE ISTANBUL SODIMM_DDR2 SODIMM_DDR2 #1	SAMSUNG ELECTRONICS
CHECK HJ KIM	DEV. STEP PV		
APPROVAL SJ PARK	REV 00		PART NO. BA41-00920A
MODULE CODE	LAST EDIT July 18, 2008 13:52:45 PM		PAGE 58 OF 64

SAMSUNG PROPRIETARY
THIS DOCUMENT CONTAINS CONFIDENTIAL PROPRIETARY INFORMATION THAT IS SAMSUNG ELECTRONICS CO'S PROPERTY. DO NOT DISCLOSE TO OR DUPLICATE FOR OTHERS EXCEPT AS AUTHORIZED BY SAMSUNG.

DDR SO-DIMM #1

Height : 9.2mm (Reverse)

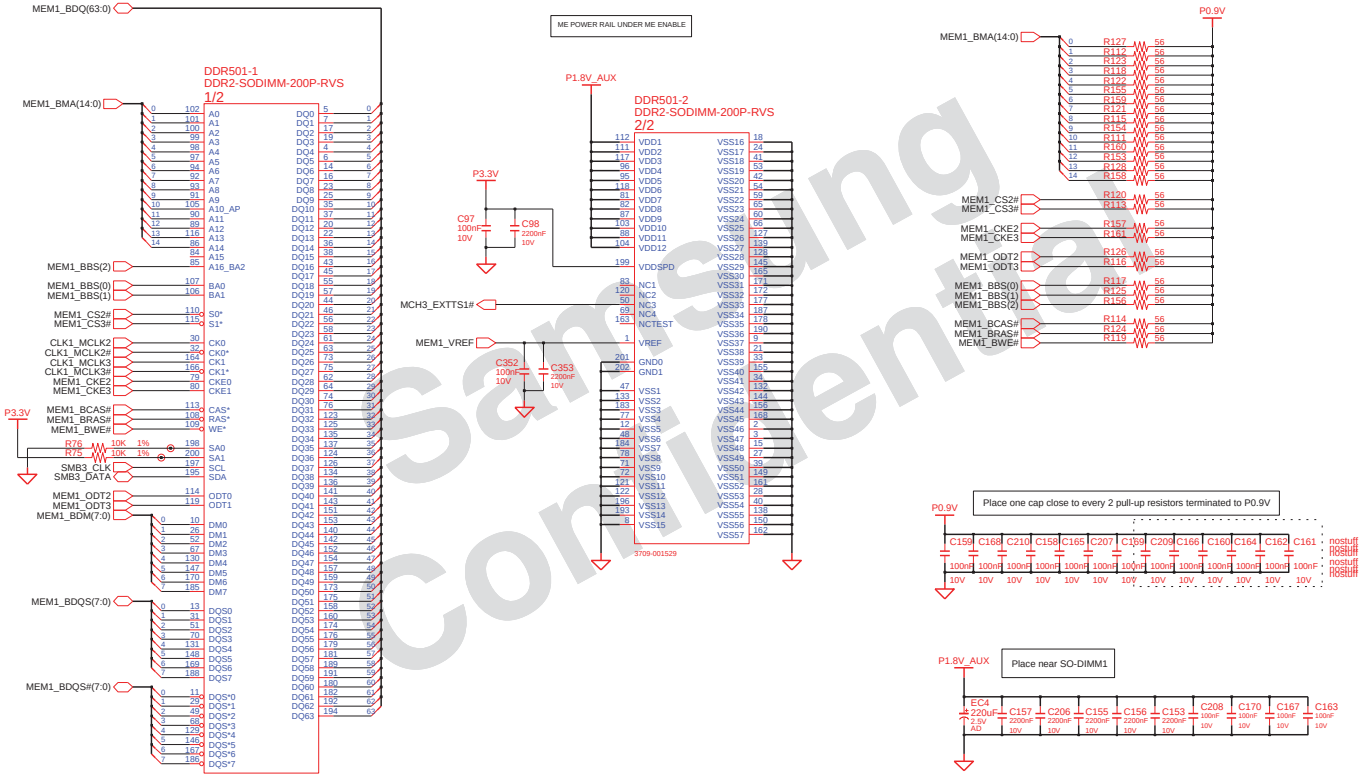

Samsung Confidential

http://hobi-elektronika.net

DRAW TERMI	DATE 1/10/2008	TITLE ISTANBUL SODIMM_DDR2 SODIMM_DDR2 #2	SAMSUNG ELECTRONICS
CHECK HJ KIM	DEV. STEP PV		
APPROVAL SJ PARK	REV 00		PART NO. BA41-00920A
MODULE CODE	LAST EDIT July 18, 2008 13:52:45 PM		PAGE 59 OF 64

SAMSUNG PROPRIETARY
THIS DOCUMENT CONTAINS CONFIDENTIAL PROPRIETARY INFORMATION THAT IS SAMSUNG ELECTRONICS CO'S PROPERTY. DO NOT DISCLOSE TO OR DUPLICATE FOR OTHERS EXCEPT AS AUTHORIZED BY SAMSUNG.

Internal VR Strap	
INTVRMEN	Pull up
VccSus1_05, VccSus1_5, VccCL1_5	
VccLAN1_05, VccCL1_05	

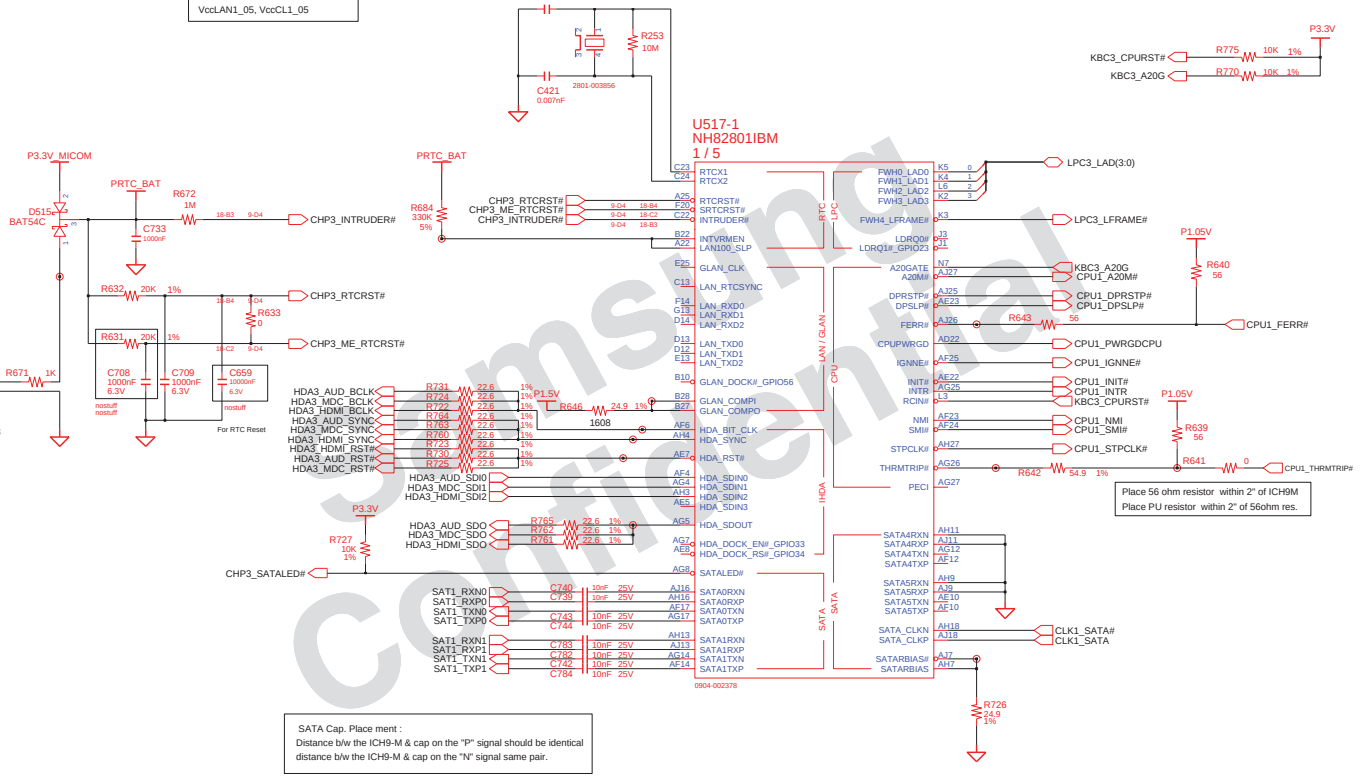

Samsung Confidential

http://hobi-elektronika.net

DRAW: TERMI	DATE: 1/10/2008	TITLE: ISTANBUL ICH_9M_B ICH9-M (1/5)	SAMSUNG ELECTRONICS
CHECK: HJ KIM	DEV. STEP: PV		PART NO. BA41-00920A
APPROVAL: SJ PARK	REV: 00		
MODULE CODE	LAST EDIT	July 18, 2008 13:52:45 PM	PAGE 34 OF 64

SAMSUNG PROPRIETARY
THIS DOCUMENT CONTAINS CONFIDENTIAL PROPRIETARY INFORMATION THAT IS SAMSUNG ELECTRONICS CO'S PROPERTY. DO NOT DISCLOSE TO OR DUPLICATE FOR OTHERS EXCEPT AS AUTHORIZED BY SAMSUNG.

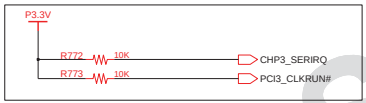

LPC option ; These are used with LPC

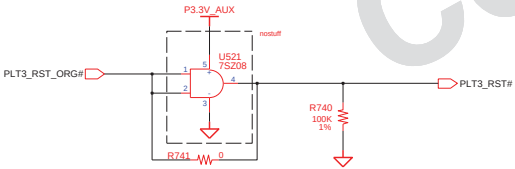

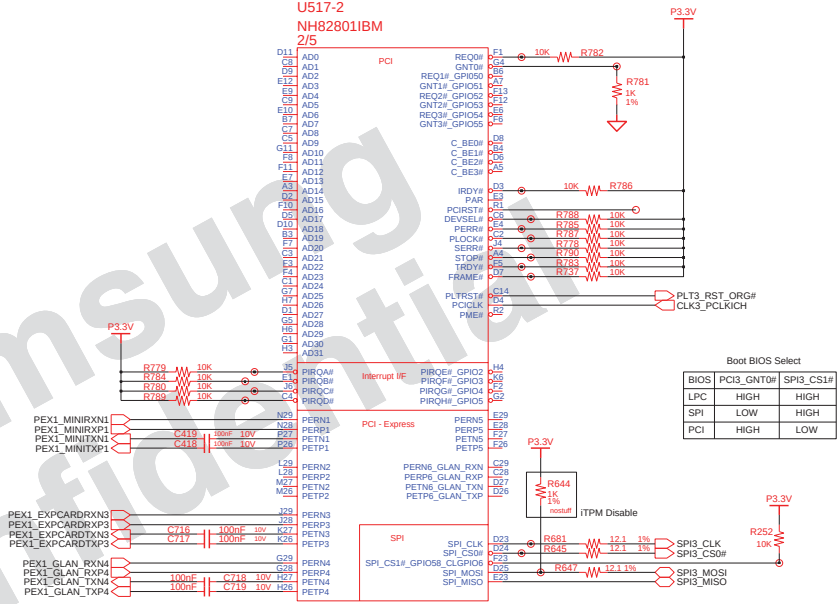

Boot BIOS Select

BIOS	PCI3_GNT0#	SPI3_CS1#
LPC	HIGH	HIGH
SPI	LOW	HIGH
PCI	HIGH	LOW

AC caps : PCIE need to be within 250mils of the driver
Resistor for Test : Place Stuffing Option to minimize stubs

Samsung Confidential

http://hobi-elektronika.net

DRAW: TERMI	DATE: 1/10/2008	TITLE: ISTANBUL ICH_9M_B ICH9-M (2/5)	SAMSUNG ELECTRONICS
CHECK: HJ KIM	DEV. STEP: PV		PART NO.: BA41-00920A
APPROVAL: SJ PARK	REV: 00		
MODULE CODE: undefined	LAST EDIT: July 18, 2008 13:52:45 PM		PAGE 35 OF 64

SAMSUNG PROPRIETARY
THIS DOCUMENT CONTAINS CONFIDENTIAL PROPRIETARY INFORMATION THAT IS SAMSUNG ELECTRONICS CO'S PROPERTY. DO NOT DISCLOSE TO OR DUPLICATE FOR OTHERS EXCEPT AS AUTHORIZED BY SAMSUNG.

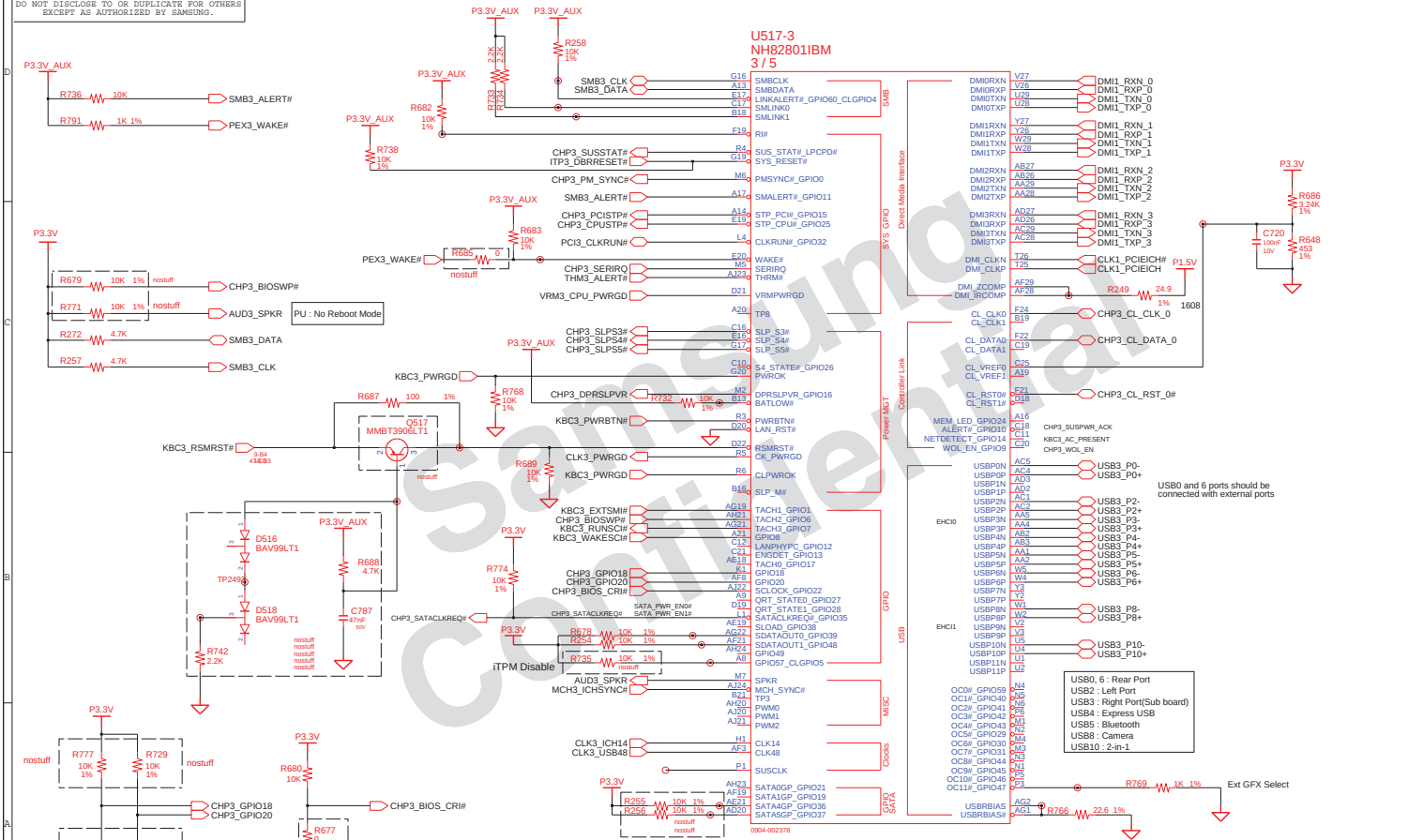

DRAW: TERMI	DATE: 1/10/2008	TITLE: ISTANBUL ICH_9M_B ICH9-M (3/5)	SAMSUNG ELECTRONICS
CHECK: HJ KIM	DEV. STEP: PV		PART NO. BA41-00920A
APPROVAL: SJ PARK	REV: 00		
MODULE CODE	LAST EDIT: July 18, 2008 13:52:45 PM		PAGE 36 OF 64

Samsung Confidential
http://hobi-elektronika.net

SAMSUNG PROPRIETARY

THIS DOCUMENT CONTAINS CONFIDENTIAL PROPRIETARY INFORMATION THAT IS SAMSUNG ELECTRONICS CO'S PROPERTY. DO NOT DISCLOSE TO OR DUPLICATE FOR OTHERS EXCEPT AS AUTHORIZED BY SAMSUNG.

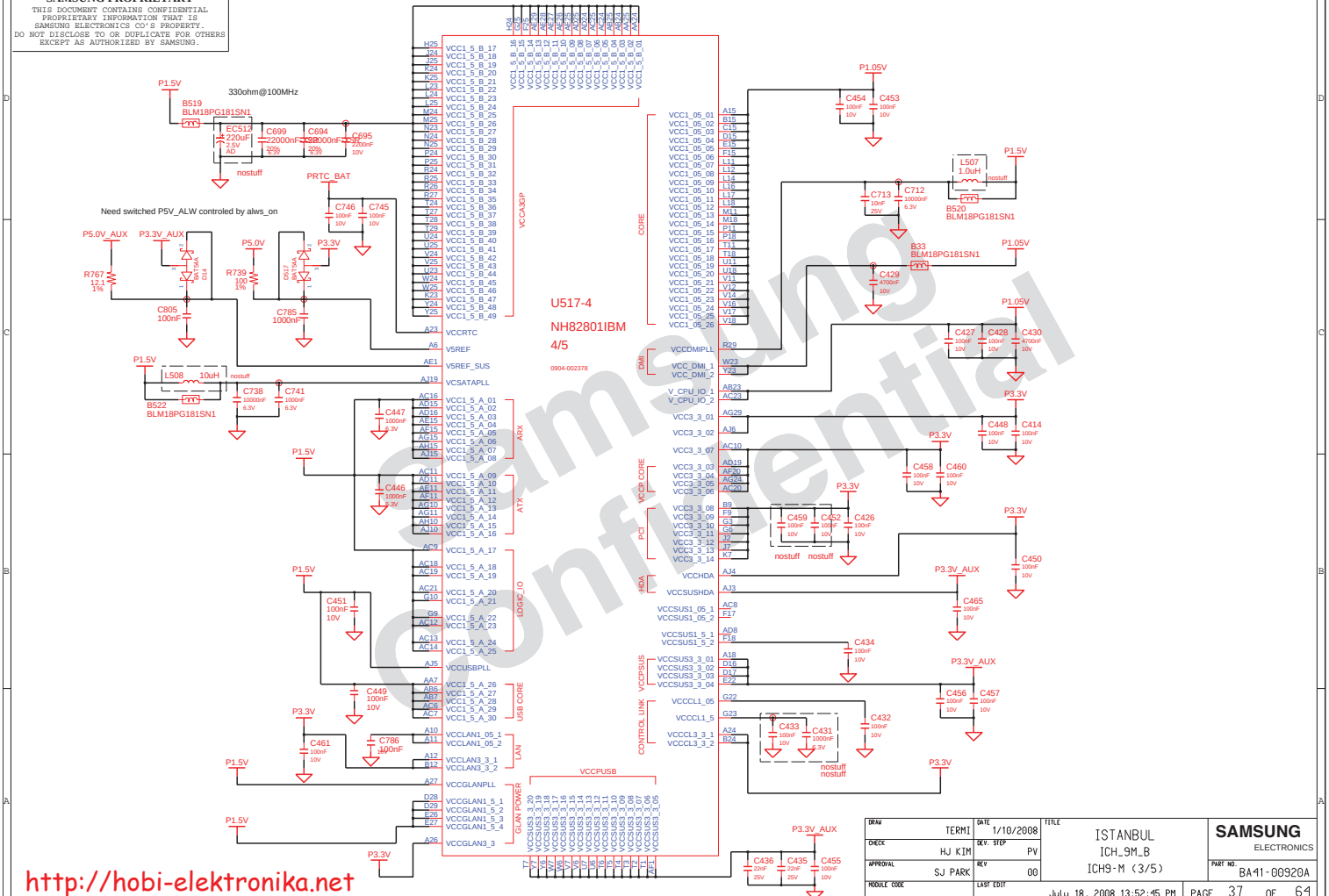

http://hobi-elektronika.net

DRAW	TERMI	DATE 1/10/2008	TITLE ISTANBUL ICH_9M_B ICH9-M (3/5)
CHECK	HJ KIM	DEV. STEP PV	SAMSUNG ELECTRONICS
APPROVAL	SJ PARK	REV 00	PART NO. BA41-00920A
MODULE CODE		LAST EDIT July 18, 2008 13:52:45 PM	PAGE 37 OF 64

SAMSUNG PROPRIETARY

THIS DOCUMENT CONTAINS CONFIDENTIAL PROPRIETARY INFORMATION THAT IS SAMSUNG ELECTRONICS CO'S PROPERTY. DO NOT DISCLOSE TO OR DUPLICATE FOR OTHERS EXCEPT AS AUTHORIZED BY SAMSUNG.

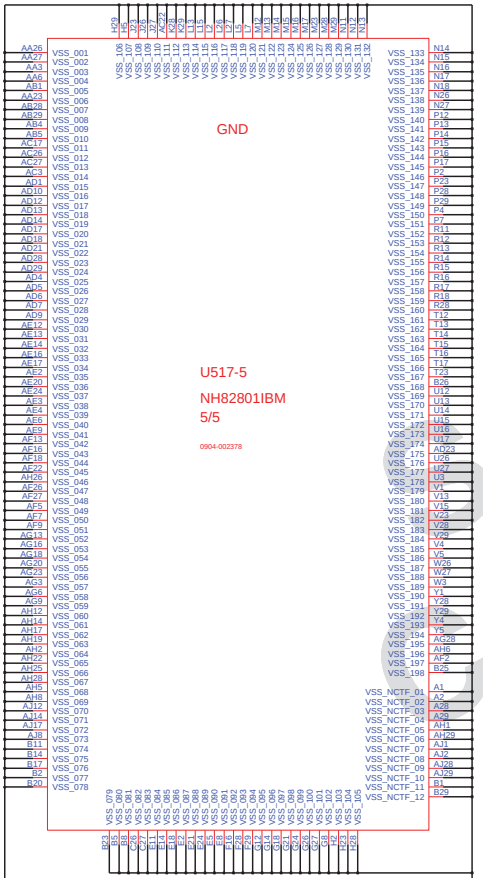

Samsung Confidential

http://hobi-elektronika.net

DRAW: TERMI	DATE: 1/10/2008	TITLE: ISTANBUL ICH_9M_B ICH9-M (5/5)	SAMSUNG ELECTRONICS
CHECK: HJ KIM	DEV. STEP: PV		
APPROVAL: SJ PARK	REV: 00		PART NO.: BA41-00920A
MODULE CODE	LAST EDIT: July 18, 2008 13:52:45 PM		PAGE 38 OF 64

SAMSUNG PROPRIETARY
THIS DOCUMENT CONTAINS CONFIDENTIAL
PROPRIETARY INFORMATION THAT IS
SAMSUNG ELECTRONICS CO'S PROPERTY.
DO NOT DISCLOSE TO OR DUPLICATE FOR OTHERS
EXCEPT AS AUTHORIZED BY SAMSUNG.

- SPI ROM LIST -

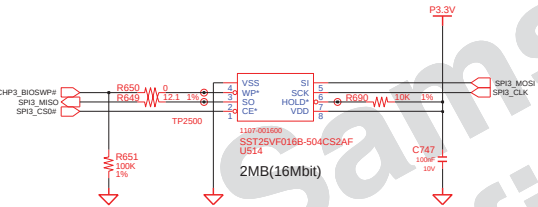

02	VERIFY REAL MODE	66	CONFIGURE ADVANCE CACHE REG.
03	DISABLE NMI	6A	DISPLAY EXTERNAL CACHE SIZE
04	GET CPU TYPE	6C	DISPLAY SHADOW MESSAGE
06	INIT. SYSTEM H/W	6E	DISPLAY NON-DISPOSABLE SEGMENT
08	INIT. CHIPSET REG.	70	DISPLAY ERROR MESSAGE
09	SET IN POST FLAG	72	CHECK FOR CONFIGURATION ERROR
0A	INIT CPU.REG	74	TEST REAL-TIME CLOCK
0B	CPU CACHE ON	76	CHECK FOR KEYBOARD EERROR
0C	INIT.CACHE TO POST	7C	SETUP HARDWARE INTERRUPT VECTOR
OE	INIT. I/O VALUE	7E	TEST COPROCESSER IF PRESENT
0F	ENABLE THE L-BUS IDE	80	DISABLE ON-BOARD I/O PORT
10	INIT. POWER MANAGER	82	DETECT AND INSTALL EXT.RS232C
11	LOAD ALTERNATE REG.	84	DETECT AND INSTALL EXT.PARALLEL
13	PCI BUS MASTER RESET WITH INITIAL POST VALUE	86	RE-INIT. ON-BOARD I/O PORT
14	INIT. KEYBOARD CONTROLLER	88	INIT. BIOS DATA ROM
16	CHECK CHECKSUM	8A	INIT.EXTENDED BIOS DATA AREA
18	8254 TIMER INIT.	8C	INIT. FDD CONTROLLER
1A	8237 DMA CONTROLLER INIT.	9A	SHADOW OPTION ROMS
1C	RESET INTERRUP CONTROLLER	9C	SETUP POWER MANAGEMENT
20	TEST DRAM REFRESH	9E	ENABLE H/W INTERRUPT
22	TEST 8742 KEYBOARD CONTROLLER	A0	SET TIME OF DAY
24	SET ES SEGMENT REG. TO 4GB	A4	INIT. TYPEMATIC RATE
26	ENABLE A20	A8	ERASE F2 PROMPT
28	AUTO SIZING DRAM	AA	SCAN FOR F2 KEY STROKE
32	COMPUTE THE CPU SPEED	AC	ENTER SETUP
34	TESET CMOS RAM	AE	CLEAR IN POST FLAG
38	SHADOW SYSTEM BIOS ROM	B0	CHECK FOR ERRORS
3A	AUTO SIZING CACHE	B2	POST DONE-PREPARE TO BOOT O/S
3C	CONFIGURE ADVANCED CHIPSET REG.	B4	ONE BEEP
3D	LOAD ALTER REG. WITH CMOS VALUE	B6	CHECK PASSWORD (OPTION)
42	INIT. INTERRUPT VECTOR	B7	ACPI INIT
44	INIT. BIOS INTERRUPT	BA	DMI INIT
46	CHECK ROM COPYRIGHT NOTICE	BE	CLEAR SCREEN
47	INIT. I20 SUPPORT IF INSTALLED	C0	TRY BOOT WITH INT19
48	CHECK VIDEO CONFIGURE AGAINST CMOS	D0	INTERRUPT HANDLER ERROR
49	INIT. PCI BUS AND DEVICE	D2	UNKNOWN INTERRUPT ERROR
4A	INIT. ALL VIDEO BIOS ROM	D4	PENDING INTERRUPT ERROR
4C	SHADOW VIDEO BIOS ROM	D6	SHUTDOWN 5
50	DISPLAY CPU TYPE AND SPEED	D8	SHUTDOWN ERROR
52	TEST KEYBOARD	DA	EXTENDED BLOCK MOVE
54	SET KEYCLICK IF ENABLED	DC	SHUTDOWN 10
56	ENABLE KEYBOARD	89	ENABLE NMI
58	TEST FOR UNEXPECTED INTERRUPTS	90	INIT. HDD CONTROLLER
5A	DISPLAY " PRESS ..... SETUP"	91	INIT. LOCAL BUS HDD CONTROLLER
5C	TEST RAM GETWEEN 512K AND 640K	92	JUMP TO USER PATCH 2
60	TEST EXTENDED MEMORY	94	DISABLE A20 ADDRESS LINE
62	TEST EXTENDED MEMORY ADDRESS LINE	96	CLEAR HUGE ES SEGMENT REG.
64	JUMP TO USER PATCH 1	98	SEARCH FOR OPTION ROMS

Samsung Confidential

http://hobi-elektronika.net

DRAW: TERMI	DATE: 1/10/2008	TITLE: ISTANBUL SPI_BIOS_ROM SPI_BIOS_ROM	SAMSUNG ELECTRONICS
CHECK: HJ KIM	DEV. STEP: PV		
APPROVAL: SJ PARK	REV: 00		PART NO.: BA41-00920A
MODULE CODE	LAST EDIT	July 18, 2008 13:52:45 PM	PAGE 60 OF 64

SAMSUNG PROPRIETARY
THIS DOCUMENT CONTAINS CONFIDENTIAL PROPRIETARY INFORMATION THAT IS SAMSUNG ELECTRONICS CO'S PROPERTY. DO NOT DISCLOSE TO OR DUPLICATE FOR OTHERS EXCEPT AS AUTHORIZED BY SAMSUNG.

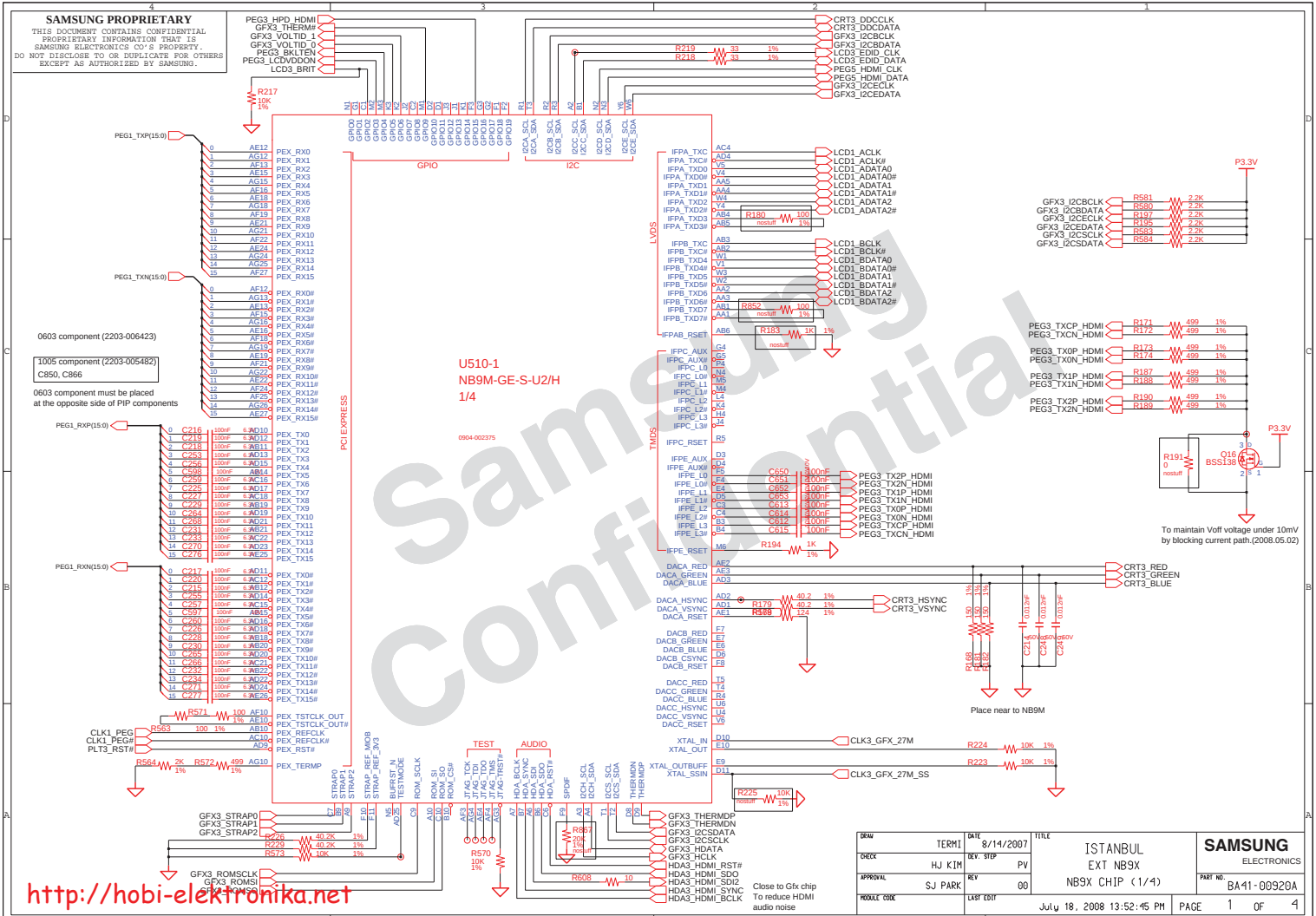

DRAW TERMI	DATE 8/14/2007	TITLE ISTANBUL EXT NB9X NB9X CHIP (1/4)	SAMSUNG ELECTRONICS
CHECK HJ KIM	DEV. STEP PV		PART NO. BA41-00920A
APPROVAL SJ PARK	REV 00		
MODULE CODE	LAST EDIT July 18, 2008 13:52:45 PM	PAGE 1 OF 4	

Samsung Confidential
http://hobi-elektronika.net

SAMSUNG PROPRIETARY

THIS DOCUMENT CONTAINS CONFIDENTIAL PROPRIETARY INFORMATION THAT IS SAMSUNG ELECTRONICS CO'S PROPERTY. DO NOT DISCLOSE TO OR DUPLICATE FOR OTHERS EXCEPT AS AUTHORIZED BY SAMSUNG.

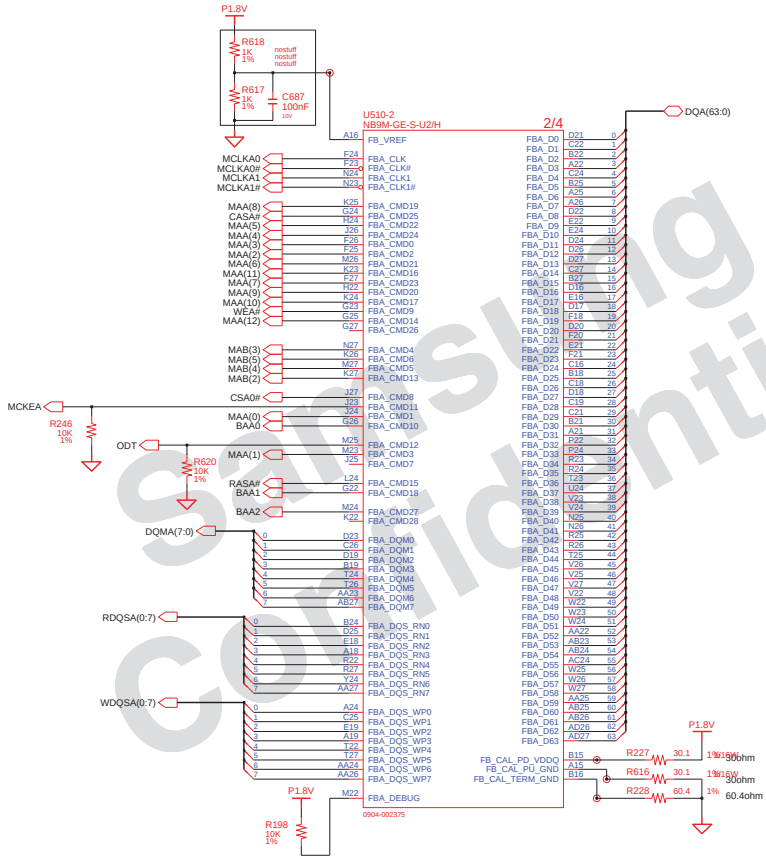

DRAW: TERMI	DATE: 8/14/2007	TITLE: ISTANBUL EXT NB9X NB9X CHIP (2/4)	SAMSUNG ELECTRONICS
CHECK: HJ KIM	DEV. STEP: PV		PART NO.: BA41-00920A
APPROVAL: SJ PARK	REV: 00		
MODULE CODE	LAST EDIT: July 18, 2008 13:52:45 PM	PAGE 2 OF 4	

http://hobi-elektronika.net

SAMSUNG PROPRIETARY

THIS DOCUMENT CONTAINS CONFIDENTIAL PROPRIETARY INFORMATION THAT IS SAMSUNG ELECTRONICS CO'S PROPERTY. DO NOT DISCLOSE TO OR DUPLICATE FOR OTHERS EXCEPT AS AUTHORIZED BY SAMSUNG.

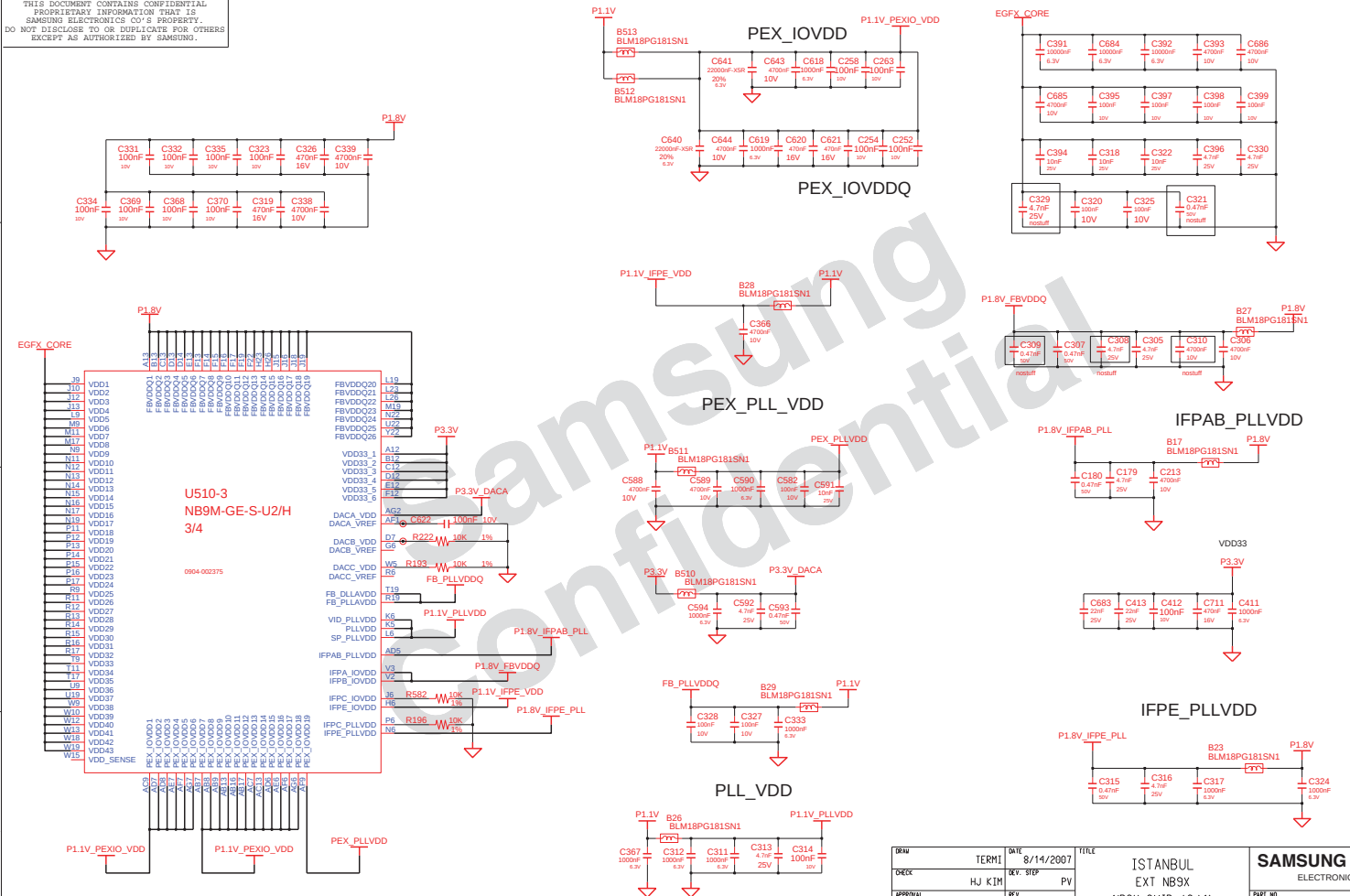

Samsung Confidential

http://hobi-elektronika.net

DRAW: TERMI	DATE: 8/14/2007	TITLE: ISTANBUL EXT NB9X NB9X CHIP (3/4)	SAMSUNG ELECTRONICS
CHECK: HJ KIM	DEV. STEP: PV		PART NO.: BA41-00920A
APPROVAL: SJ PARK	REV: 00		
MODULE CODE	LAST EDIT: July 18, 2008 13:52:45 PM	PAGE 3 OF 4	

SAMSUNG PROPRIETARY
THIS DOCUMENT CONTAINS CONFIDENTIAL PROPRIETARY INFORMATION THAT IS SAMSUNG ELECTRONICS CO'S PROPERTY. DO NOT DISCLOSE TO OR DUPLICATE FOR OTHERS EXCEPT AS AUTHORIZED BY SAMSUNG.

Pin	Description	Activate
GPIO(0)	DVI detect	High
GPIO(1)	TV detect	Low
GPIO(2)	PWM Brigtness control	High
GPIO(3)	LCD VDD on enable	High
GPIO(4)	Backlight on/off	High
GPIO(5)	GPU VID0	High = 1.0V, Low = 1.1V
GPIO(6)	GPU VID1	NC
GPIO(7)	GPU VID2 or Mem VID	NC
GPIO(8)	Thermal diode Alert	LOW
GPIO(9)	Fan control	NC
GPIO(10)	Memory VREF switch	NC
GPIO(11)	SLI Rater sync	HIGH
GPIO(12)	AC Power dection input	NC
GPIO(13)	Power supply control	NC
GPIO(14)	Power supply control	NC
GPIO(15)	HDMI Detect	High
GPIO(16)	DP Detect	High

Strap option	Bit 3	Bit 2	Bit 1	Bit 0
ROM_SO	XCLK_27	TVMODE[2]	TVMODE[1]	TVMODE[0]
ROM_SCLK	DEVID[4]	VENID	CLK_CFG	PLL_TERM
ROM_SI	RAMCFG[3]	RAMCFG[2]	RAMCFG[1]	RAMCFG[0]
STRAP2	DEVID[3]	DEVID[2]	DEVID[1]	DEVID[0]
STRAP1	PADCFG[3]	PADCFG[2]	PADCFG[1]	PADCFG[0]
STRAP0	USER[3]	USER[2]	USER[1]	USER[0]
Resistor value	PU to VDD	PD to GND	XCLK27 = 1 27MHz	
5K ohm	1000	0000	RAM CFG (SEC)	
10 Kohm	1001	0001	0011 512Mbit 0111 1Gbit	
15K ohm	1010	0010	USER[3:0]=1111 for EDID	
20K ohm	1011	0011	PADCFG[3:0]=0001 of NP	
25K ohm	1100	0100	NB9M-GS:0x06E9 (01001)	
30K ohm	1101	0101	NB9M-GE:0x06E8 (01000)	
35K ohm	1110	0110	NB9P-GS:0x0649 (01001)	
45K ohm	1111	0111	NB9P-GE:0x0406 (00110)	
			NB9P-GE2:0x0??? (0????)	

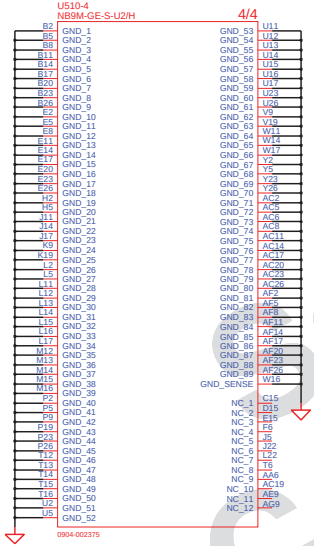

	Bit3	Bit2	Bit1	Bit0	
ROMSO	1	1	1	1	
SCLK	0	0	1	0	
SI	0	1	0	1	512Mbit (gDDR2)
	0	0	0	1	1Gb (gDDR2)
Strap2	1	0	0	1	9M-GS
	1	0	0	0	9M-GE
Strap1	0	0	0	1	
Strap0	1	1	1	1	

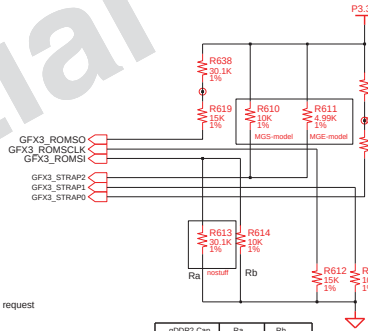

gDDR2 Cap	Ra	Rb
1Gbit	nostuff	stuff
512Mbit	stuff	nostuff

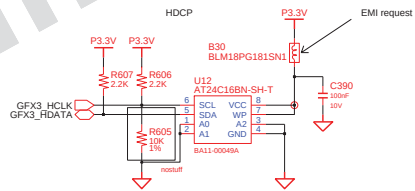

PU is for I2C ROM (AT24C16B, A0~A2 = 000)
PD is for Crypto ROM

Samsung Confidential

http://hobi-elektronika.net

DRAW: TERMI	DATE: 8/14/2007	TITLE: ISTANBUL EXT NB9X NB9X CHIP (4/4)	SAMSUNG ELECTRONICS
CHECK: HJ KIM	DEV. STEP: PV		PART NO.: BA41-00920A
APPROVAL: SJ PARK	REV: 00		
MODULE CODE	LAST EDIT: July 18, 2008 13:52:45 PM	PAGE 4 OF 4	

SAMSUNG PROPRIETARY
THIS DOCUMENT CONTAINS CONFIDENTIAL
PROPRIETARY INFORMATION THAT IS
SAMSUNG ELECTRONICS CO'S PROPERTY.
DO NOT DISCLOSE TO OR DUPLICATE FOR OTHERS
EXCEPT AS AUTHORIZED BY SAMSUNG.

LOWER SUB PARTITION

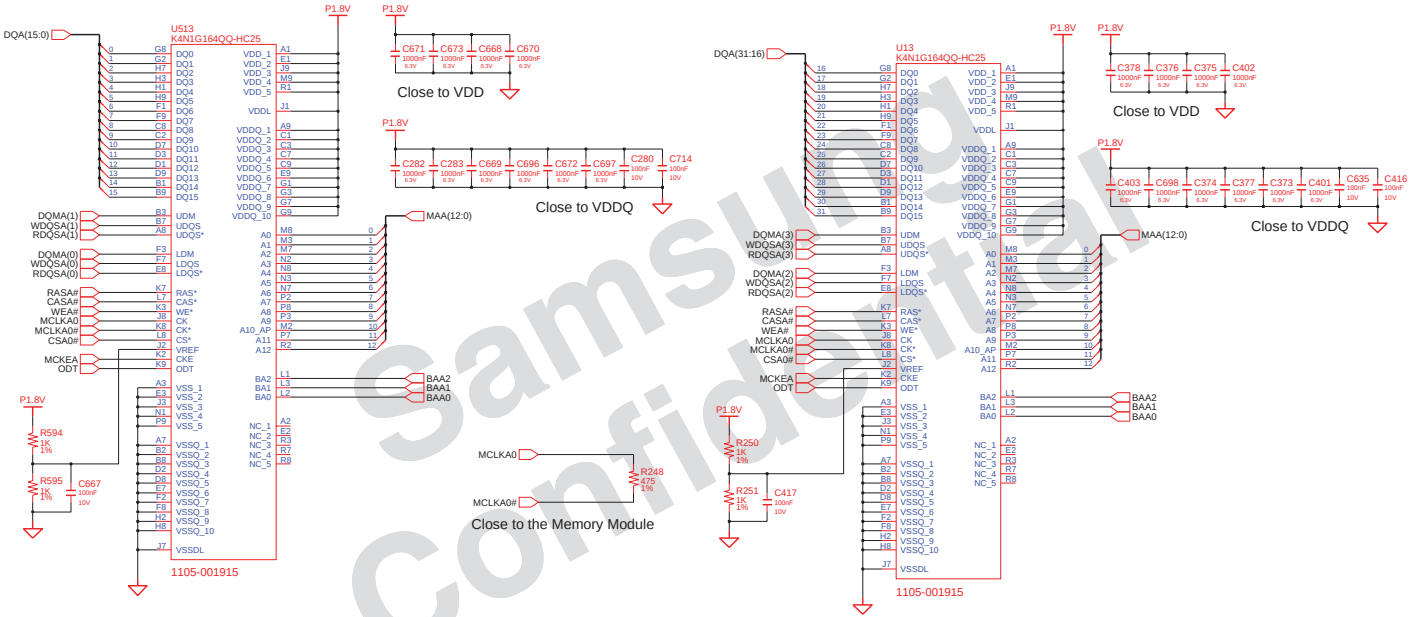

Samsung Confidential

http://hobi-elektronika.net

DRAW: TERMI	DATE: 8/12/2006	TITLE: ISTANBUL Graphics_Memory(GDDR2) Graphics_Memory_Nvidia #1	SAMSUNG ELECTRONICS
CHECK: HJ KIM	DEV. STEP: PV		
APPROVAL: SJ PARK	REV: 00		PART NO.: BA41-00920A
MODULE CODE	LAST EDIT: July 18, 2008 13:52:45 PM		PAGE 1 OF 2

SAMSUNG PROPRIETARY
THIS DOCUMENT CONTAINS CONFIDENTIAL
PROPRIETARY INFORMATION THAT IS
SAMSUNG ELECTRONICS CO'S PROPERTY.
DO NOT DISCLOSE TO OR DUPLICATE FOR OTHERS
EXCEPT AS AUTHORIZED BY SAMSUNG.

UPPER SUB PARTITION

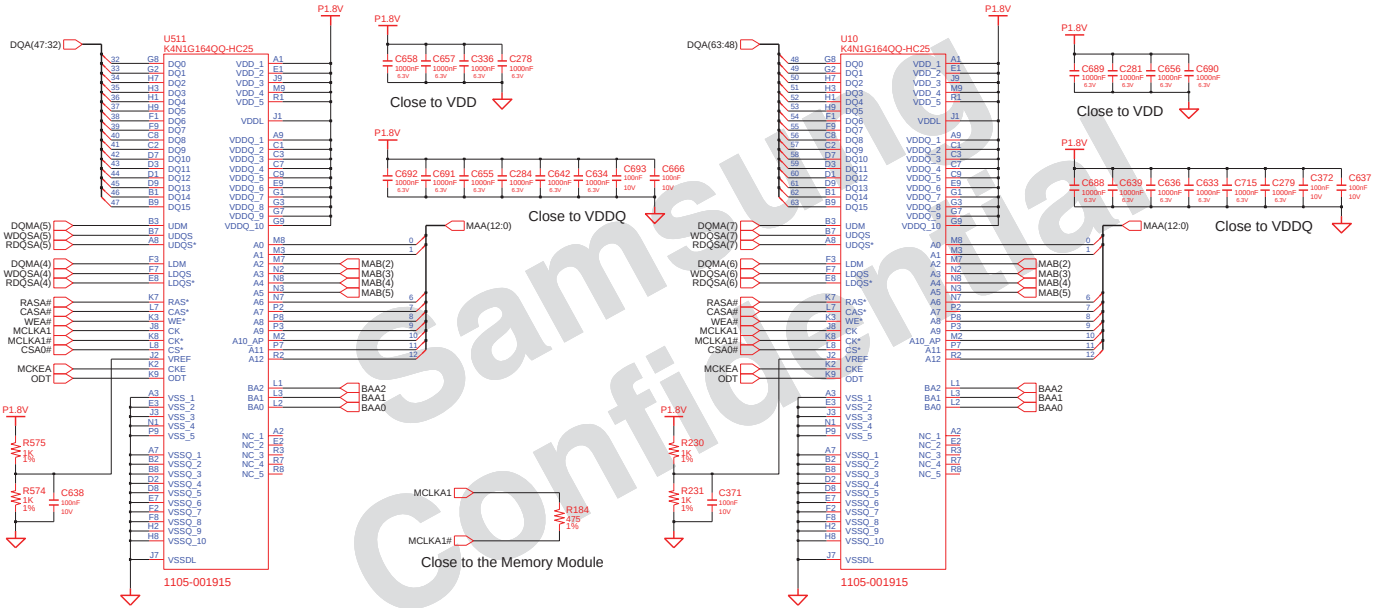

Samsung Confidential

http://hobi-elektronika.net

DRAW: TERMI	DATE: 8/12/2006	TITLE: ISTANBUL Graphics_Memory(GDDR2) Graphics_Memory_Nvidia #2	SAMSUNG ELECTRONICS
CHECK: HJ KIM	DEV. STEP: PV		
APPROVAL: SJ PARK	REV: 00		PART NO.: BA41-00920A
MODULE CODE	LAST EDIT: July 18, 2008 13:52:45 PM		PAGE 2 OF 2

SAMSUNG PROPRIETARY
THIS DOCUMENT CONTAINS CONFIDENTIAL PROPRIETARY INFORMATION THAT IS SAMSUNG ELECTRONICS CO'S PROPERTY. DO NOT DISCLOSE TO OR DUPLICATE FOR OTHERS EXCEPT AS AUTHORIZED BY SAMSUNG.

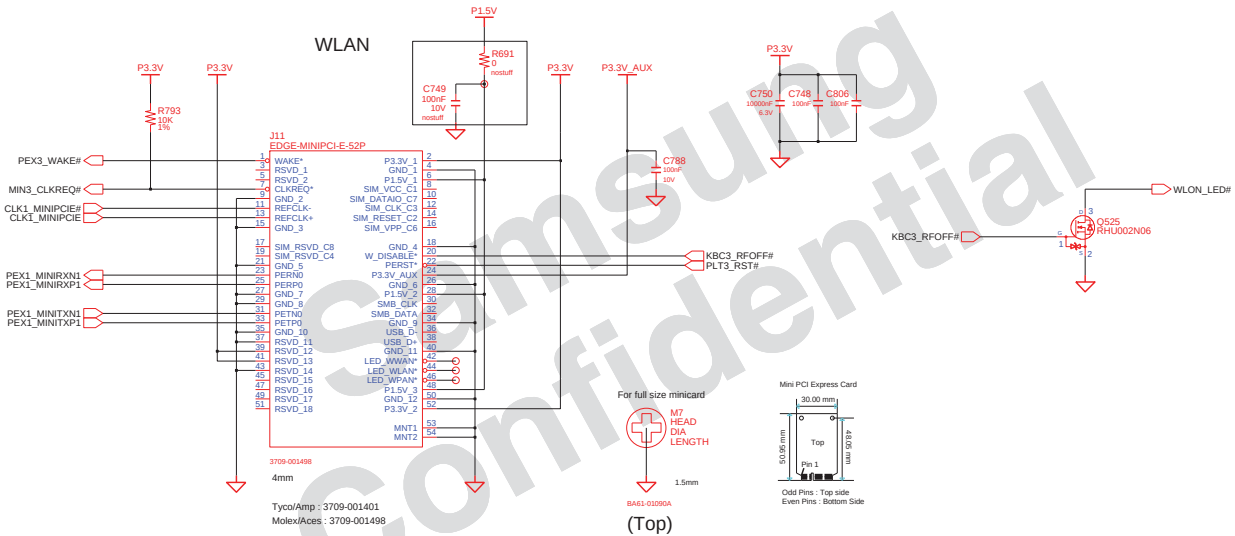

Samsung Confidential

http://hobi-elektronika.net

DRAW: TERMI	DATE: 1/10/2008	TITLE: ISTANBUL PCIE_Minicard_Slot PCIE_Minicard_Slot	SAMSUNG ELECTRONICS
CHECK: HJ KIM	DEV. STEP: PV		
APPROVAL: SJ PARK	REV: 00		PART NO.: BA41-00920A
MODULE CODE: undefined	LAST EDIT: July 18, 2008 13:52:45 PM		PAGE 51 OF 64

SAMSUNG PROPRIETARY
THIS DOCUMENT CONTAINS CONFIDENTIAL PROPRIETARY INFORMATION THAT IS SAMSUNG ELECTRONICS CO'S PROPERTY. DO NOT DISCLOSE TO OR DUPLICATE FOR OTHERS EXCEPT AS AUTHORIZED BY SAMSUNG.

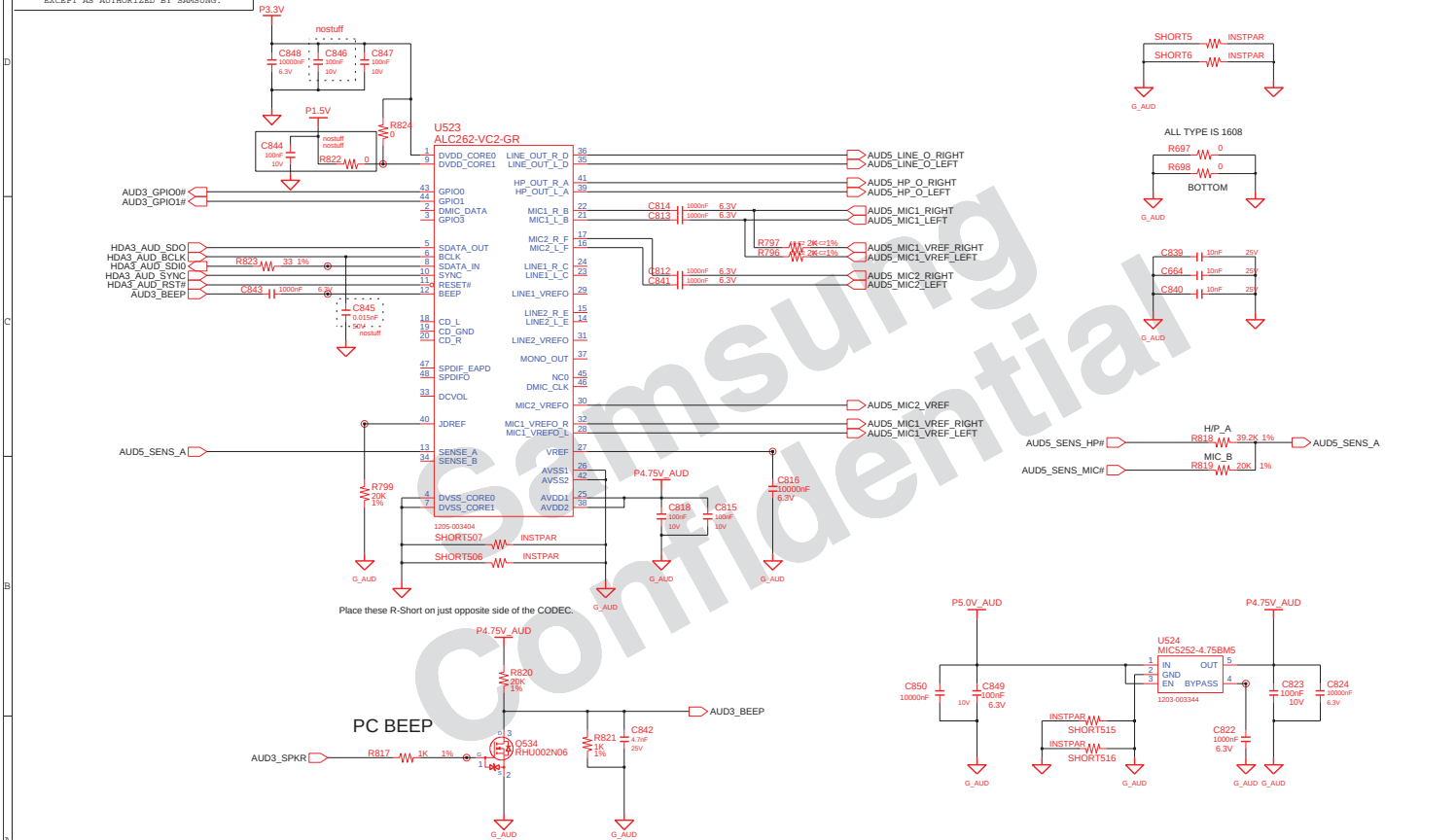

Samsung Confidential

DRAW: TERMI	DATE: 1/10/2008	TITLE: ISTANBUL HDA_Codec_Alc262 HDA_Codec_Alc262 #1	SAMSUNG ELECTRONICS
CHECK: HJ KIM	DEV. STEP: PV		
APPROVAL: SJ PARK	REV: 00		PART NO.: BA41-00920A
MODULE CODE: undefined	LAST EDIT: July 18, 2008 13:52:45 PM		PAGE 28 OF 64

http://hobi-elektronika.net

SAMSUNG PROPRIETARY
THIS DOCUMENT CONTAINS CONFIDENTIAL PROPRIETARY INFORMATION THAT IS SAMSUNG ELECTRONICS CO'S PROPERTY. DO NOT DISCLOSE TO OR DUPLICATE FOR OTHERS EXCEPT AS AUTHORIZED BY SAMSUNG.

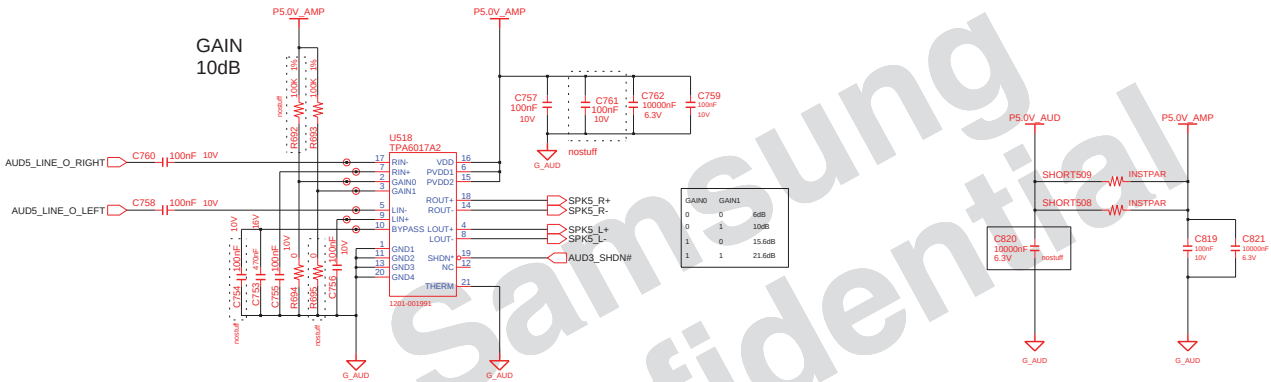

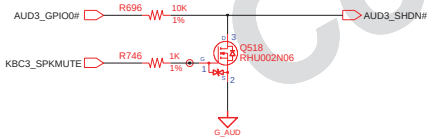

INTERNAL STEREO SPEAKERS

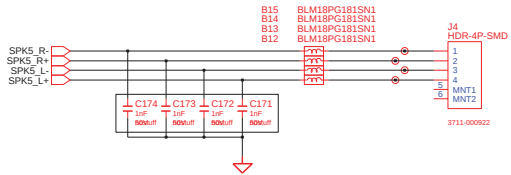

Samsung Confidential

http://hobi-elektronika.net

DRAW TERMI	DATE 1/10/2008	TITLE ISTANBUL HDA_Codec_Alc262 HDA_Codec_Alc262 #2	SAMSUNG ELECTRONICS
CHECK HJ KIM	DEV. STEP PV		
APPROVAL SJ PARK	REV 00		PART NO. BA41-00920A
MODULE CODE	LAST EDIT July 18, 2008 13:52:45 PM		PAGE 29 OF 64

SAMSUNG PROPRIETARY
THIS DOCUMENT CONTAINS CONFIDENTIAL
PROPRIETARY INFORMATION THAT IS
SAMSUNG ELECTRONICS CO'S PROPERTY.
DO NOT DISCLOSE TO OR DUPLICATE FOR OTHERS
EXCEPT AS AUTHORIZED BY SAMSUNG.

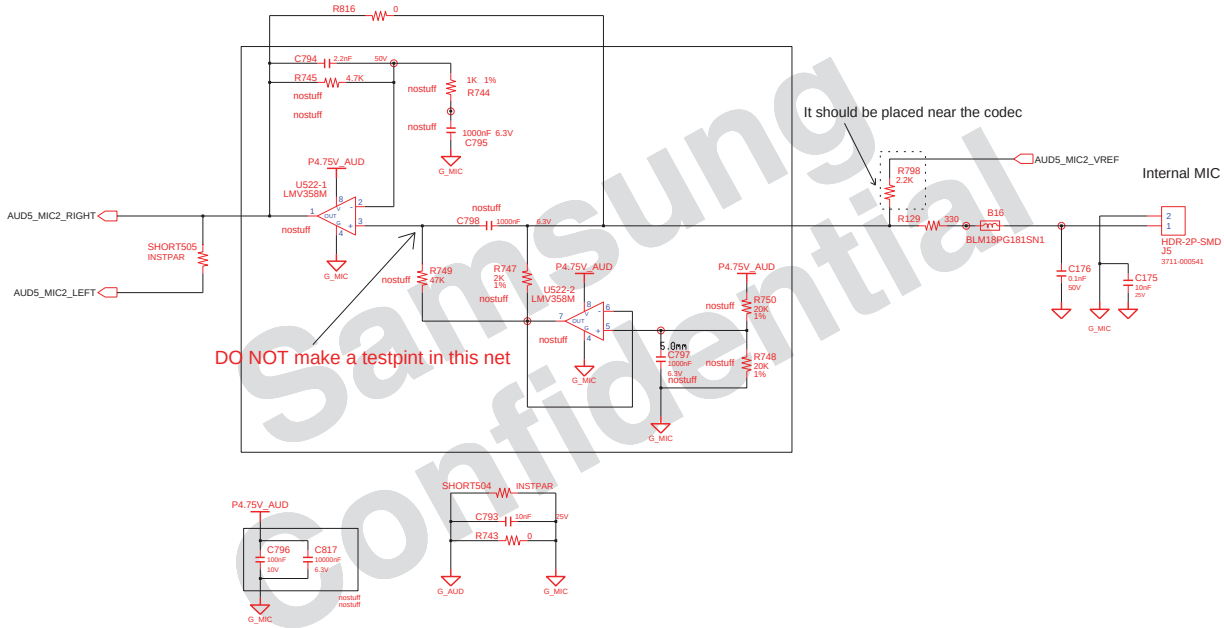

Samsung Confidential

http://hobi-elektronika.net

DRAW: TERMI	DATE: 1/10/2008	TITLE: ISTANBUL HDA_Codec_Alc262 HDA_Codec_Alc262 #3	SAMSUNG ELECTRONICS
CHECK: HJ KIM	DEV. STEP: PV		
APPROVAL: SJ PARK	REV: 00		PART NO.: BA41-00920A
MODULE CODE: undefined	LAST EDIT: July 18, 2008 13:52:45 PM		PAGE 30 OF 64

SAMSUNG PROPRIETARY
THIS DOCUMENT CONTAINS CONFIDENTIAL PROPRIETARY INFORMATION THAT IS SAMSUNG ELECTRONICS CO'S PROPERTY. DO NOT DISCLOSE TO OR DUPLICATE FOR OTHERS EXCEPT AS AUTHORIZED BY SAMSUNG.

HEADPHONE

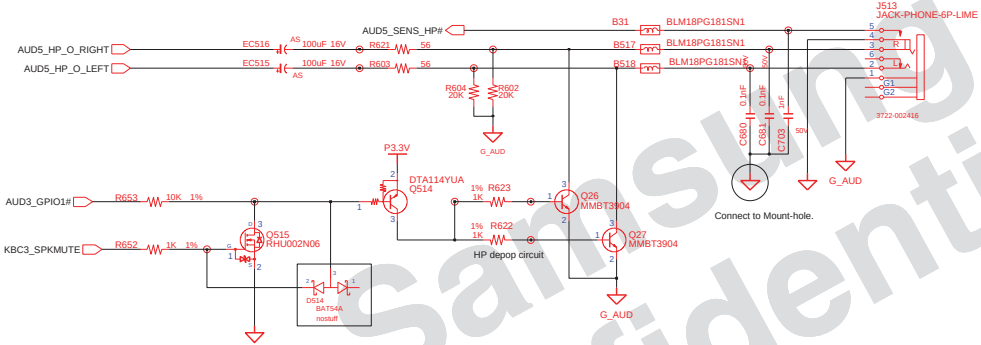

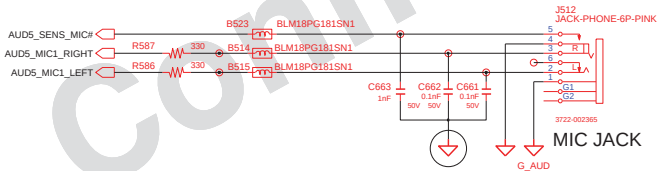

MIC JACK

The traces led to Audio Jacks have the width over 10mil

Samsung Confidential

http://hobi-elektronika.net

DRAW: TERMI	DATE: 1/10/2008	TITLE: ISTANBUL HDA_Codec_Alc262 HDA_Codec_Alc262 #4	SAMSUNG ELECTRONICS
CHECK: HJ KIM	DEV. STEP: PV		PART NO. BA41-00920A
APPROVAL: SJ PARK	REV: 00		
MODULE CODE	LAST EDIT: July 18, 2008 13:52:45 PM		PAGE 31 OF 64

SAMSUNG PROPRIETARY
THIS DOCUMENT CONTAINS CONFIDENTIAL PROPRIETARY INFORMATION THAT IS SAMSUNG ELECTRONICS CO'S PROPERTY. DO NOT DISCLOSE TO OR DUPLICATE FOR OTHERS EXCEPT AS AUTHORIZED BY SAMSUNG.

MICOM RESET

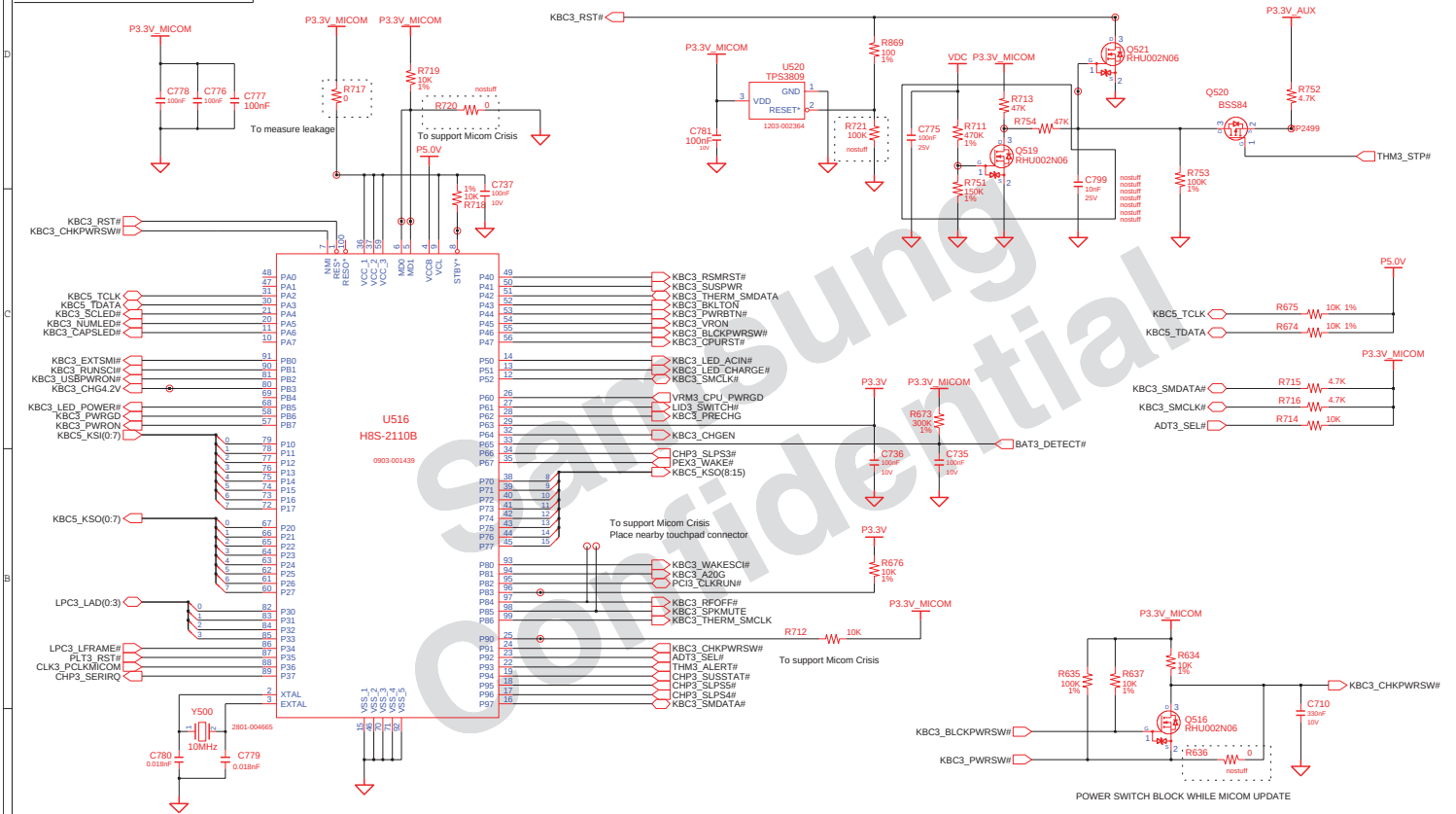

MICOM Crisis Update

Condition: P90=P91=P92=High(MICOM_P3V)
MD0=MD1=Low(0V)
Serial Port: P84 & P85

http://hobi-elektronika.net

samsung confidential

DRAW TERMI	DATE 1/10/2008	TITLE ISTANBUL MICOM_Renesas2110_100p MICOM_Renesas2110_100p	SAMSUNG ELECTRONICS
CHECK HJ KIM	DEV. STEP PV		PART NO. BA41-00920A
APPROVAL SJ PARK	REV 00		
MODULE CODE	LAST EDIT July 18, 2008 13:52:45 PM	PAGE 47 OF 64	

SAMSUNG PROPRIETARY
THIS DOCUMENT CONTAINS CONFIDENTIAL PROPRIETARY INFORMATION THAT IS SAMSUNG ELECTRONICS CO'S PROPERTY. DO NOT DISCLOSE TO OR DUPLICATE FOR OTHERS EXCEPT AS AUTHORIZED BY SAMSUNG.

Main to HDD

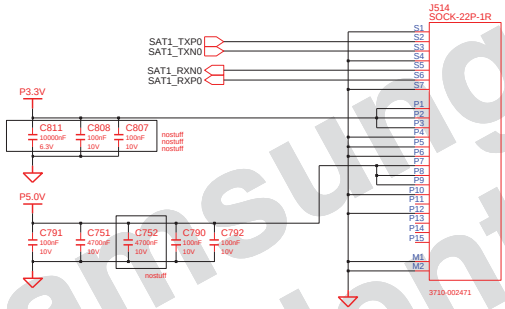

Samsung Confidential

http://hobi-elektronika.net

DRAW TERMI	DATE 1/10/2008	TITLE ISTANBUL HDD_IF_Conn HDD_IF_Conn	SAMSUNG ELECTRONICS
CHECK HJ KIM	DEV. STEP PV		
APPROVAL SJ PARK	REV 00		PART NO. BA41-00920A
MODULE CODE	LAST EDIT July 18, 2008 13:52:45 PM		PAGE 33 OF 64

SAMSUNG PROPRIETARY
THIS DOCUMENT CONTAINS CONFIDENTIAL PROPRIETARY INFORMATION THAT IS SAMSUNG ELECTRONICS CO'S PROPERTY. DO NOT DISCLOSE TO OR DUPLICATE FOR OTHERS EXCEPT AS AUTHORIZED BY SAMSUNG.

SATA ODD

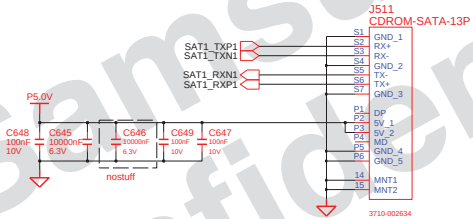

Samsung Confidential

http://hobi-elektronika.net

DRAW TERMI	DATE 1/10/2008	TITLE ISTANBUL ODD_IF_Conn ODD_IF_Conn	SAMSUNG ELECTRONICS
CHECK HJ KIM	DEV. STEP PV		
APPROVAL SJ PARK	REV 00		PART NO. BA41-00920A
MODULE CODE	LAST EDIT July 18, 2008 13:52:45 PM		PAGE 49 OF 64

SAMSUNG PROPRIETARY
THIS DOCUMENT CONTAINS CONFIDENTIAL PROPRIETARY INFORMATION THAT IS SAMSUNG ELECTRONICS CO'S PROPERTY. DO NOT DISCLOSE TO OR DUPLICATE FOR OTHERS EXCEPT AS AUTHORIZED BY SAMSUNG.

1 PORT USB CONNECTOR

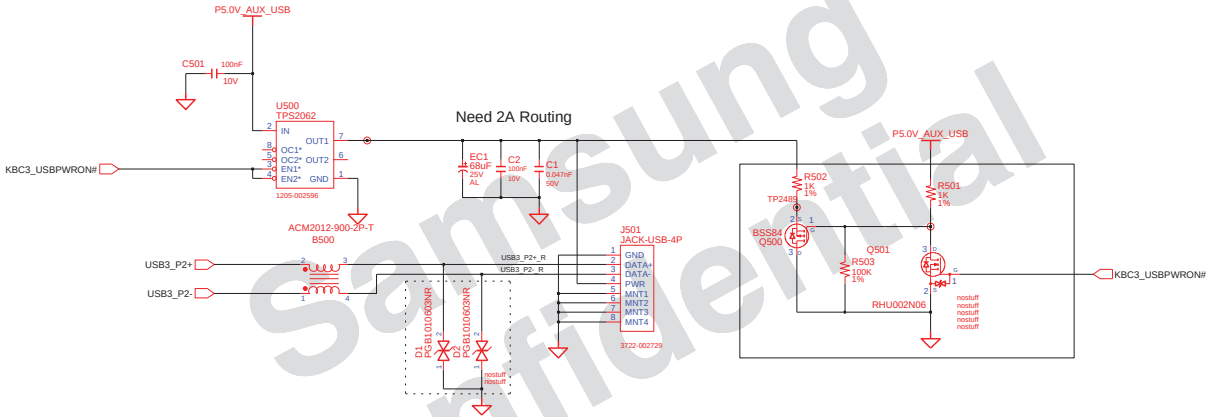

Samsung Confidential

http://hobi-elektronika.net

DRAW: TERMI	DATE: 1/10/2008	TITLE: ISTANBUL USB_1Port USB_1Port	SAMSUNG ELECTRONICS
CHECK: HJ KIM	DEV. STEP: PV		
APPROVAL: SJ PARK	REV: 00		PART NO. BA41-00920A
MODULE CODE	LAST EDIT: July 18, 2008 13:52:45 PM		PAGE 63 OF 64

SAMSUNG PROPRIETARY
THIS DOCUMENT CONTAINS CONFIDENTIAL PROPRIETARY INFORMATION THAT IS SAMSUNG ELECTRONICS CO'S PROPERTY. DO NOT DISCLOSE TO OR DUPLICATE FOR OTHERS EXCEPT AS AUTHORIZED BY SAMSUNG.

2 PORT USB CONNECTOR

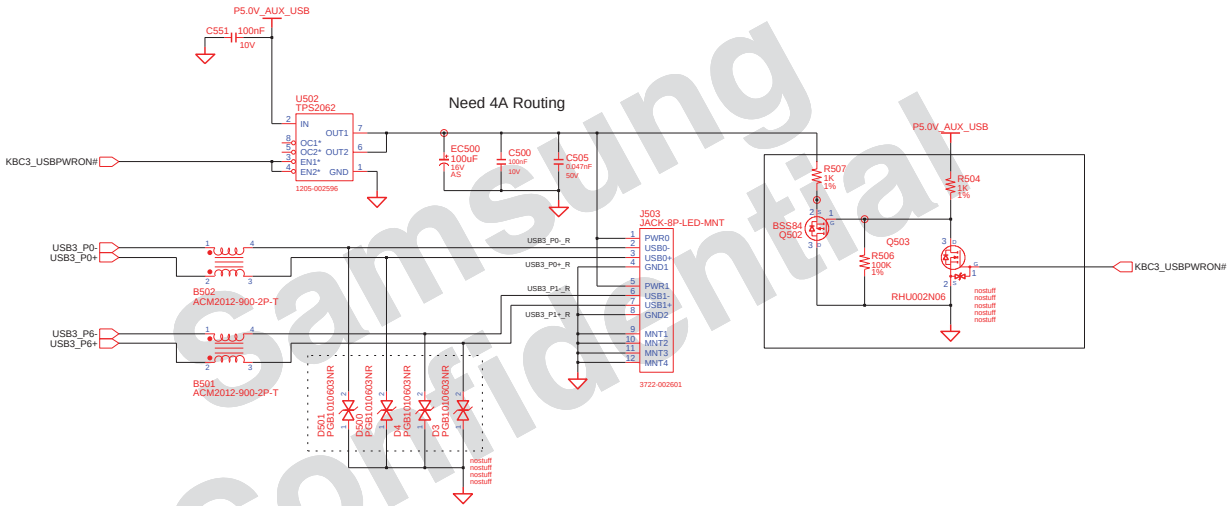

Samsung Confidential

http://hobi-elektronika.net

DRAW: TERMI	DATE: 1/10/2008	TITLE: ISTANBUL USB_2Port USB_2Port	SAMSUNG ELECTRONICS
CHECK: HJ KIM	DEV. STEP: PV		
APPROVAL: SJ PARK	REV: 00		PART NO. BA41-00920A
MODULE CODE	LAST EDIT: July 18, 2008 13:52:45 PM		PAGE 64 OF 64

SAMSUNG PROPRIETARY
THIS DOCUMENT CONTAINS CONFIDENTIAL
PROPRIETARY INFORMATION THAT IS
SAMSUNG ELECTRONICS CO'S PROPERTY.
DO NOT DISCLOSE TO OR DUPLICATE FOR OTHERS
EXCEPT AS AUTHORIZED BY SAMSUNG.

MDC Connecter

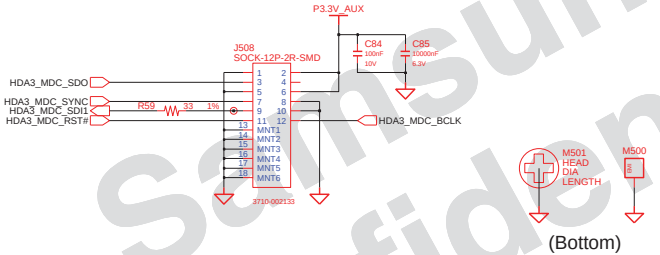

Samsung Confidential

http://hobi-elektronika.net

DRAW TERMI	DATE 1/10/2008	TITLE ISTANBUL HDA_Modem HDA_Modem	SAMSUNG ELECTRONICS
CHECK HJ KIM	DEV. STEP PV		
APPROVAL SJ PARK	REV 00		PART NO. BA41-00920A
MODULE CODE	LAST EDIT July 18, 2008 13:52:45 PM		PAGE 32 OF 64

SAMSUNG PROPRIETARY
THIS DOCUMENT CONTAINS CONFIDENTIAL
PROPRIETARY INFORMATION THAT IS
SAMSUNG ELECTRONICS CO'S PROPERTY.
DO NOT DISCLOSE TO OR DUPLICATE FOR OTHERS
EXCEPT AS AUTHORIZED BY SAMSUNG.

80H DECODER CONNECTOR

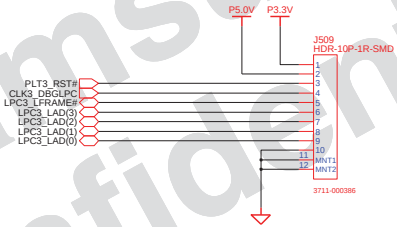

Samsung Confidential

http://hobi-elektronika.net

DRAW: TERMI	DATE: 1/10/2008	TITLE: ISTANBUL Other_Debug_80 Other_Debug_80	SAMSUNG ELECTRONICS
CHECK: HJ KIM	DEV. STEP: PV		
APPROVAL: SJ PARK	REV: 00		PART NO.: BA41-00920A
MODULE CODE	LAST EDIT: July 18, 2008 13:52:45 PM		PAGE 50 OF 64

SAMSUNG PROPRIETARY

THIS DOCUMENT CONTAINS CONFIDENTIAL PROPRIETARY INFORMATION THAT IS SAMSUNG ELECTRONICS CO'S PROPERTY. DO NOT DISCLOSE TO OR DUPLICATE FOR OTHERS EXCEPT AS AUTHORIZED BY SAMSUNG.

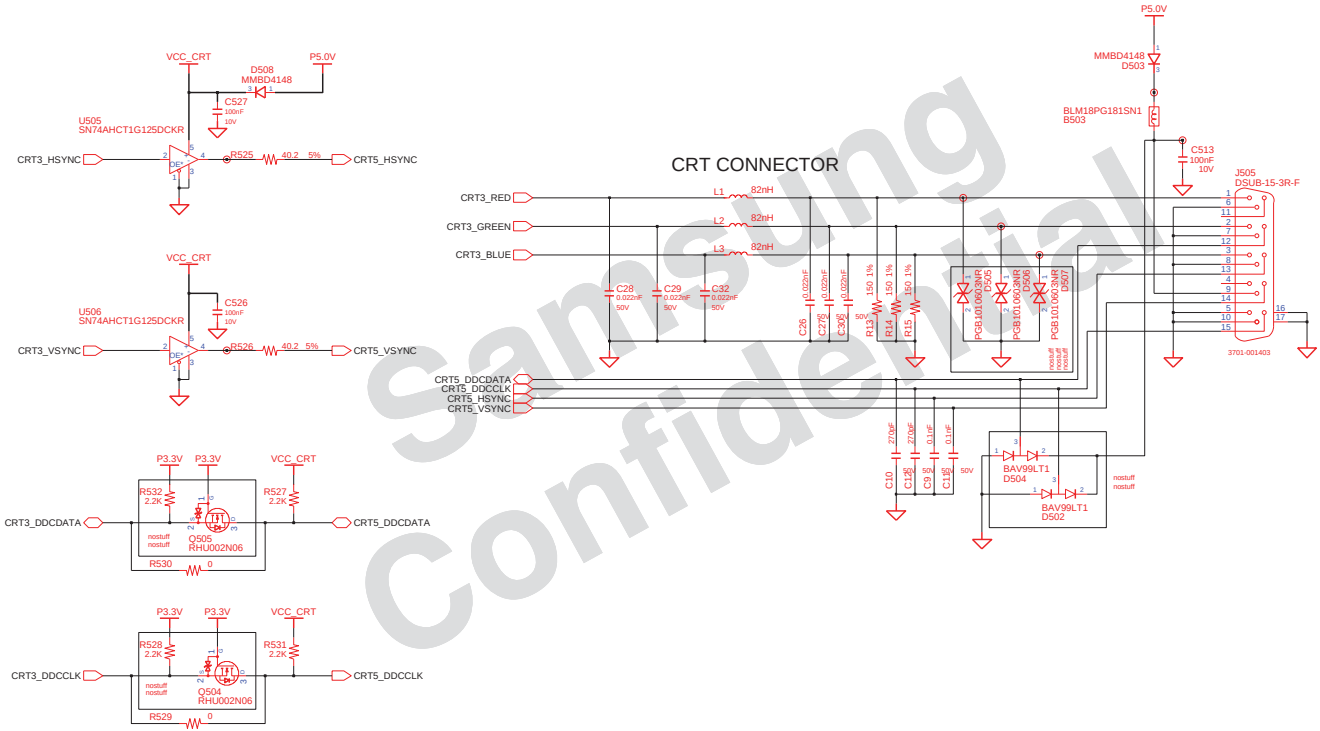

Samsung Confidential

http://hobi-elektronika.net

DRAW: TERMI	DATE: 1/10/2008	TITLE: ISTANBUL Interface_Circuit Graphics_IF_CRT	SAMSUNG ELECTRONICS
CHECK: HJ KIM	DEV. STEP: PV		
APPROVAL: SJ PARK	REV: 00		PART NO. BA41-00920A
MODULE CODE	LAST EDIT: July 18, 2008 13:52:45 PM		PAGE 25 OF 64

SAMSUNG PROPRIETARY

THIS DOCUMENT CONTAINS CONFIDENTIAL PROPRIETARY INFORMATION THAT IS SAMSUNG ELECTRONICS CO'S PROPERTY. DO NOT DISCLOSE TO OR DUPLICATE FOR OTHERS EXCEPT AS AUTHORIZED BY SAMSUNG.

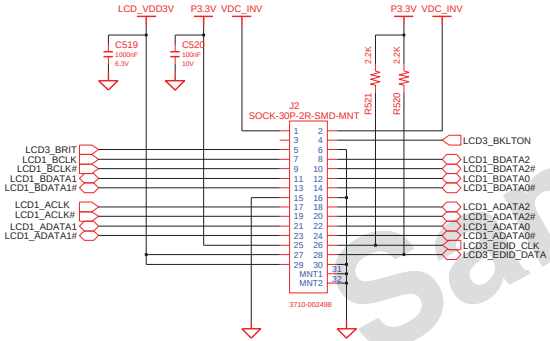

Lyon : 1channel

Istanbul : 2channel

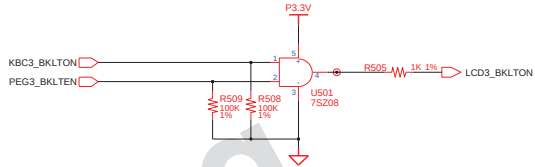

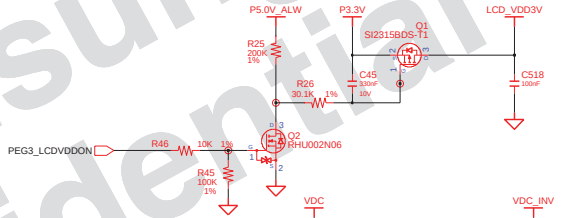

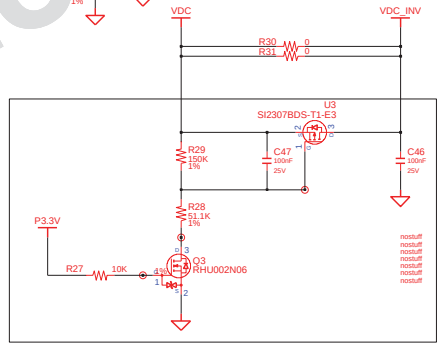

DRAW: TERMI	DATE: 1/10/2008	TITLE: ISTANBUL UNDEFINED	SAMSUNG ELECTRONICS
CHECK: HJ KIM	DEV. STEP: PV		
APPROVAL: SJ PARK	REV: 00		PART NO.: BA41-00920A
MODULE CODE	LAST EDIT: July 18, 2008 13:52:45 PM		PAGE 12 of undefined

Samsung Confidential

http://hobi-elektronika.net

SAMSUNG PROPRIETARY

THIS DOCUMENT CONTAINS CONFIDENTIAL PROPRIETARY INFORMATION THAT IS SAMSUNG ELECTRONICS CO'S PROPERTY. DO NOT DISCLOSE TO OR DUPLICATE FOR OTHERS EXCEPT AS AUTHORIZED BY SAMSUNG.

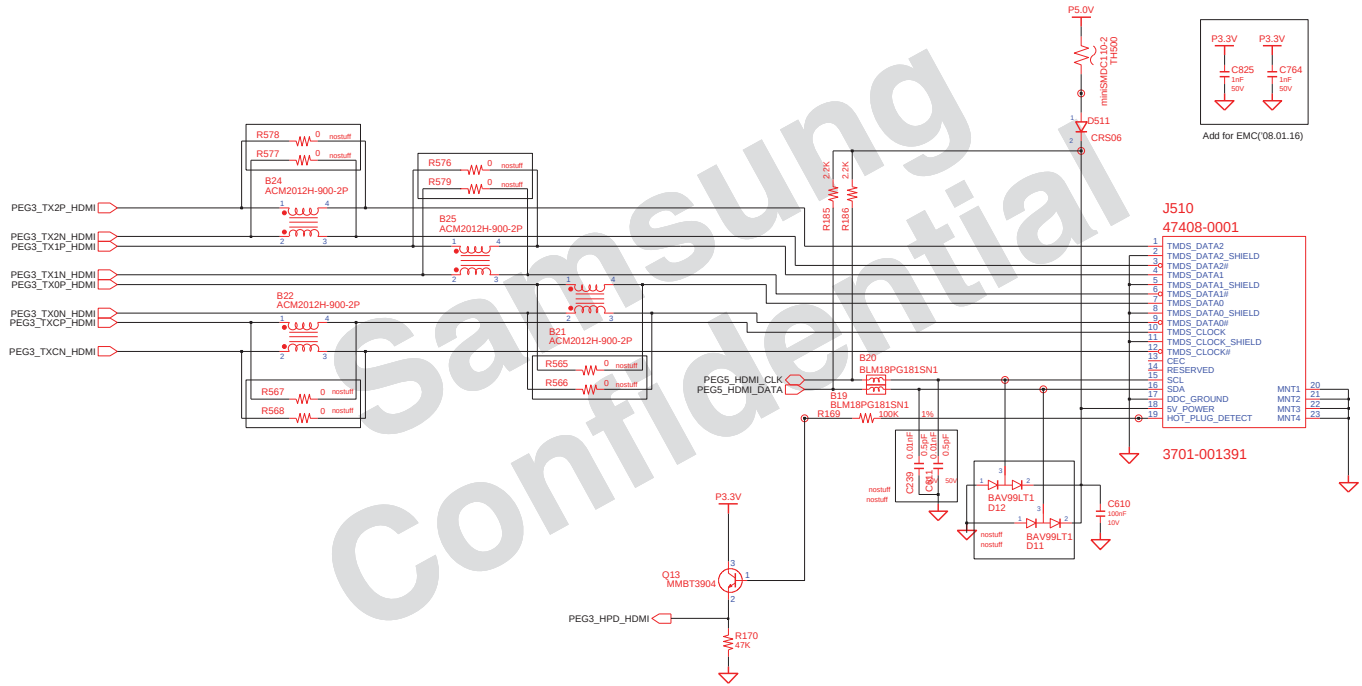

Samsung Confidential

DRAW TERMI	DATE 1/10/2008	TITLE ISTANBUL UNDEFINED	SAMSUNG ELECTRONICS
CHECK HJ KIM	DEV. STEP PV		
APPROVAL SJ PARK	REV 00		PART NO. BA41-00920A
MODULE CODE	LAST EDIT July 18, 2008 13:52:45 PM		PAGE 13 of undefined

http://hobi-elektronika.net

SAMSUNG PROPRIETARY
THIS DOCUMENT CONTAINS CONFIDENTIAL PROPRIETARY INFORMATION THAT IS SAMSUNG ELECTRONICS CO'S PROPERTY. DO NOT DISCLOSE TO OR DUPLICATE FOR OTHERS EXCEPT AS AUTHORIZED BY SAMSUNG.

Put this LED located near PWRSW from ME recommedation
Power LED, Blue color

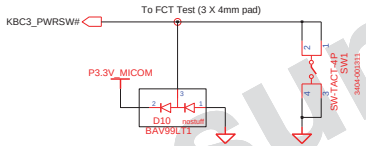

Power On LED

Samsung Confidential

http://hobi-elektronika.net

DRAW TERMI	DATE 1/10/2008	TITLE ISTANBUL MIO_Switch MIO_Switch	SAMSUNG ELECTRONICS
CHECK HJ KIM	DEV. STEP PV		
APPROVAL SJ PARK	REV 00		PART NO. BA41-00920A
MODULE CODE	LAST EDIT July 18, 2008 13:52:45 PM		PAGE 48 OF 64

SAMSUNG PROPRIETARY
THIS DOCUMENT CONTAINS CONFIDENTIAL
PROPRIETARY INFORMATION THAT IS
SAMSUNG ELECTRONICS CO'S PROPERTY.
DO NOT DISCLOSE TO OR DUPLICATE FOR OTHERS
EXCEPT AS AUTHORIZED BY SAMSUNG.

KEYBOARD

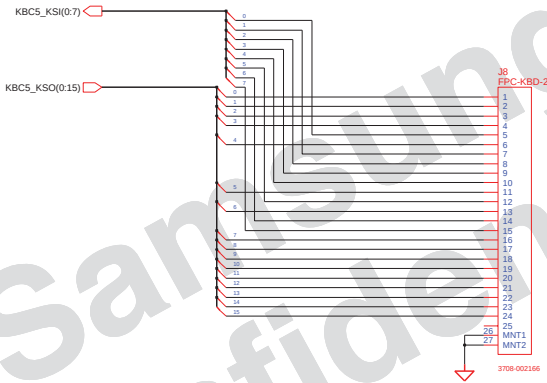

Samsung Confidential

http://hobi-elektronika.net

DRAW: TERMI	DATE: 1/10/2008	TITLE: ISTANBUL KBD_IF_Conn KBD_IF_Conn	SAMSUNG ELECTRONICS
CHECK: HJ KIM	DEV. STEP: PV		
APPROVAL: SJ PARK	REV: 00		PART NO.: BA41-00920A
MODULE CODE	LAST EDIT: July 18, 2008 13:52:45 PM		PAGE 39 OF 64

SAMSUNG PROPRIETARY
THIS DOCUMENT CONTAINS CONFIDENTIAL PROPRIETARY INFORMATION THAT IS SAMSUNG ELECTRONICS CO'S PROPERTY. DO NOT DISCLOSE TO OR DUPLICATE FOR OTHERS EXCEPT AS AUTHORIZED BY SAMSUNG.

Bluetooth Interface

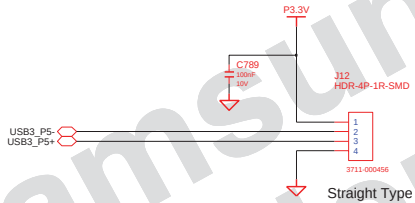

Samsung Confidential

http://hobi-elektronika.net

DRAW: TERMI	DATE: 1/10/2008	TITLE: ISTANBUL Bluetooth_IF_Conn Bluetooth_IF_Conn	SAMSUNG ELECTRONICS
CHECK: HJ KIM	DEV. STEP: PV		
APPROVAL: SJ PARK	REV: 00		PART NO.: BA41-00920A
MODULE CODE	LAST EDIT: July 18, 2008 13:52:45 PM		PAGE 19 OF 64

SAMSUNG PROPRIETARY
THIS DOCUMENT CONTAINS CONFIDENTIAL PROPRIETARY INFORMATION THAT IS SAMSUNG ELECTRONICS CO'S PROPERTY. DO NOT DISCLOSE TO OR DUPLICATE FOR OTHERS EXCEPT AS AUTHORIZED BY SAMSUNG.

TOUCHPAD

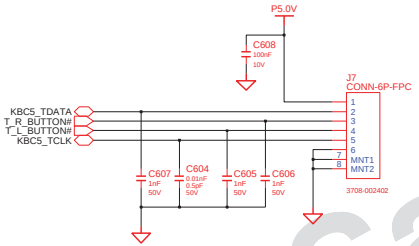

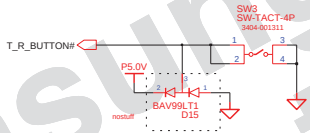

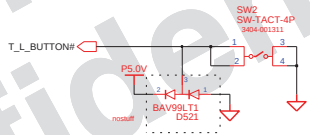

Samsung Confidential

http://hobi-elektronika.net

DRAW: TERMI	DATE: 1/10/2008	TITLE: ISTANBUL Touchpad_IF_Conn Touchpad_IF_Conn	SAMSUNG ELECTRONICS
CHECK: HJ KIM	DEV. STEP: PV		
APPROVAL: SJ PARK	REV: 00		PART NO. BA41-00920A
MODULE CODE	LAST EDIT: July 18, 2008 13:52:45 PM		PAGE 62 OF 64

SAMSUNG PROPRIETARY
THIS DOCUMENT CONTAINS CONFIDENTIAL
PROPRIETARY INFORMATION THAT IS
SAMSUNG ELECTRONICS CO'S PROPERTY.
DO NOT DISCLOSE TO OR DUPLICATE FOR OTHERS
EXCEPT AS AUTHORIZED BY SAMSUNG.

CAMERA

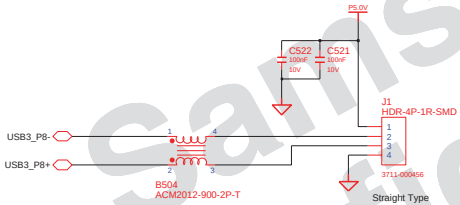

Samsung Confidential

http://hobi-elektronika.net

DRAW TERMI	DATE 1/10/2008	TITLE ISTANBUL Camera_IF_Conn Camera_IF_Conn	SAMSUNG ELECTRONICS
CHECK HJ KIM	DEV. STEP PV		
APPROVAL SJ PARK	REV 00		PART NO. BA41-00920A
MODULE CODE	LAST EDIT July 18, 2008 13:52:45 PM		PAGE 20 OF 64

SAMSUNG PROPRIETARY
THIS DOCUMENT CONTAINS CONFIDENTIAL PROPRIETARY INFORMATION THAT IS SAMSUNG ELECTRONICS CO'S PROPERTY. DO NOT DISCLOSE TO OR DUPLICATE FOR OTHERS EXCEPT AS AUTHORIZED BY SAMSUNG.

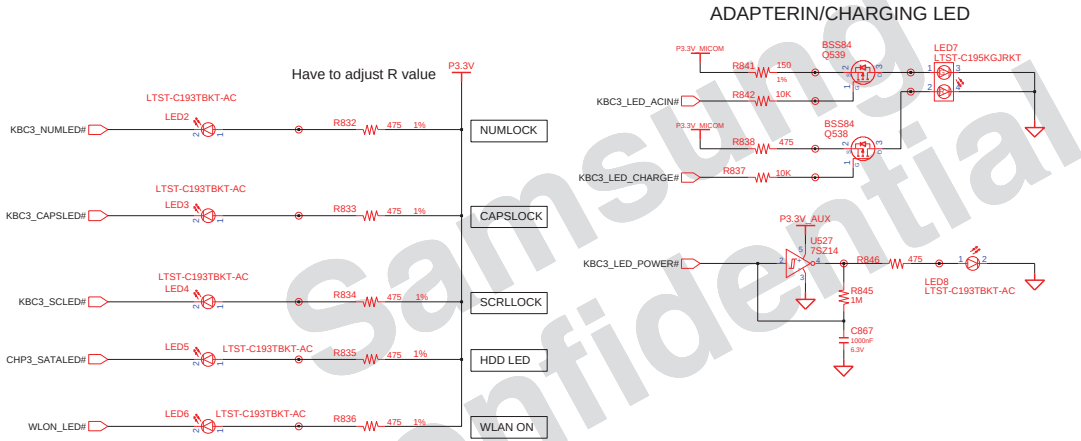

Samsung Confidential

http://hobi-elektronika.net

DRAW: TERMI	DATE: 1/10/2008	TITLE: ISTANBUL LED_Switch LED_Switch	SAMSUNG ELECTRONICS
CHECK: HJ KIM	DEV. STEP: PV		
APPROVAL: SJ PARK	REV: 00		PART NO. BA41-00920A
MODULE CODE	LAST EDIT: July 18, 2008 13:52:45 PM		PAGE 40 OF 64

SAMSUNG PROPRIETARY
THIS DOCUMENT CONTAINS CONFIDENTIAL PROPRIETARY INFORMATION THAT IS SAMSUNG ELECTRONICS CO'S PROPERTY. DO NOT DISCLOSE TO OR DUPLICATE FOR OTHERS EXCEPT AS AUTHORIZED BY SAMSUNG.

LID_SWITCH

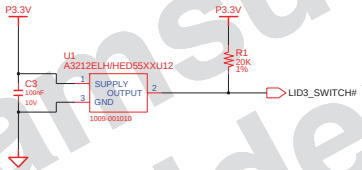

Samsung Confidential

http://hobi-elektronika.net

DRAW: TERMI	DATE: 1/10/2008	TITLE: ISTANBUL LID_Switch LID_Switch	SAMSUNG ELECTRONICS
CHECK: HJ KIM	DEV. STEP: PV		
APPROVAL: SJ PARK	REV: 00		PART NO. BA41-00920A
MODULE CODE	LAST EDIT: July 18, 2008 13:52:45 PM		PAGE 41 OF 64

SAMSUNG PROPRIETARY
THIS DOCUMENT CONTAINS CONFIDENTIAL PROPRIETARY INFORMATION THAT IS SAMSUNG ELECTRONICS CO'S PROPERTY. DO NOT DISCLOSE TO OR DUPLICATE FOR OTHERS EXCEPT AS AUTHORIZED BY SAMSUNG.

CPU VRM [INTERSIL]

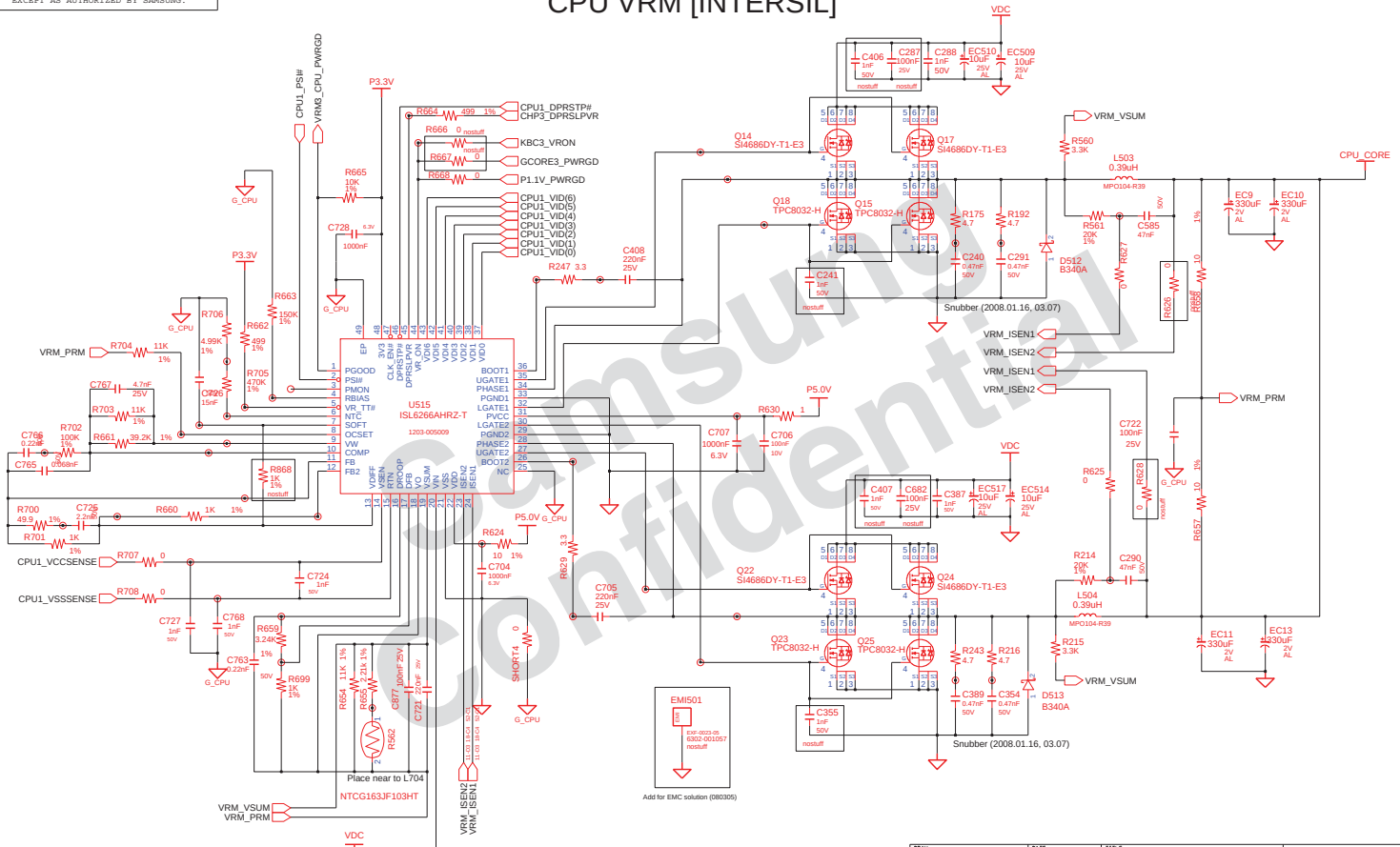

Samsung Confidential

http://hobi-elektronika.net

DRAW: TERMI	DATE: 1/10/2008	TITLE: ISTANBUL PWR_CPU_MV_Sc452 CPUI VRM (IMVP6+)	SAMSUNG ELECTRONICS
CHECK: HJ KIM	DEV. STEP: PV		
APPROVAL: SJ PARK	REV: 00		PART NO. BA41-00920A
MODULE CODE: undefined	LAST EDIT: July 18, 2008 13:52:45 PM		PAGE 52 OF 64

SAMSUNG PROPRIETARY
THIS DOCUMENT CONTAINS CONFIDENTIAL PROPRIETARY INFORMATION THAT IS SAMSUNG ELECTRONICS CO'S PROPERTY. DO NOT DISCLOSE TO OR DUPLICATE FOR OTHERS EXCEPT AS AUTHORIZED BY SAMSUNG.

P1.1V

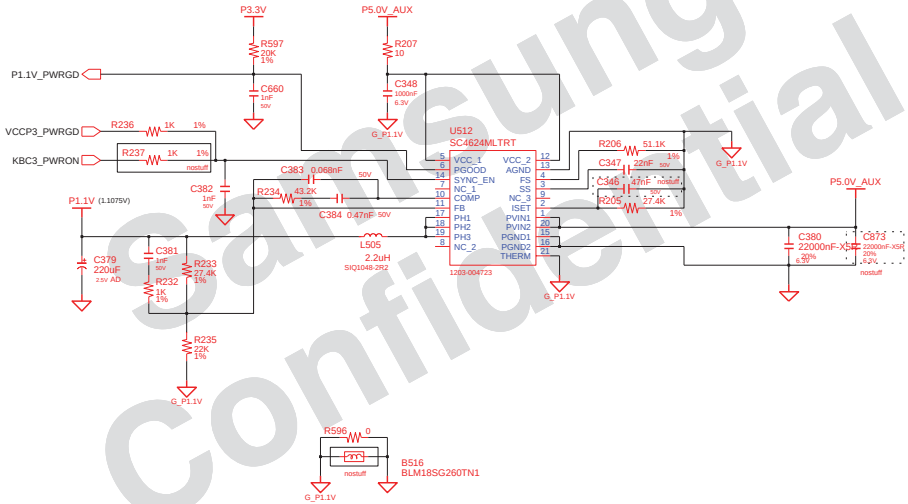

Samsung Confidential

http://hobi-elektronika.net

DRAW: TERMI	DATE: 8/14/2007	TITLE: ISTANBUL PWR_Gfx_MV_Ext Ext Gfx Memory(SC486)	SAMSUNG ELECTRONICS
CHECK: HJ KIM	DEV. STEP: PV		
APPROVAL: SJ PARK	REV: 00		PART NO.: BA41-00920A
MODULE CODE	LAST EDIT: July 18, 2008 13:52:45 PM		PAGE 1 OF 2

SAMSUNG PROPRIETARY
THIS DOCUMENT CONTAINS CONFIDENTIAL PROPRIETARY INFORMATION THAT IS SAMSUNG ELECTRONICS CO'S PROPERTY. DO NOT DISCLOSE TO OR DUPLICATE FOR OTHERS EXCEPT AS AUTHORIZED BY SAMSUNG.

P3.3V_AUX & P5.0V_AUX

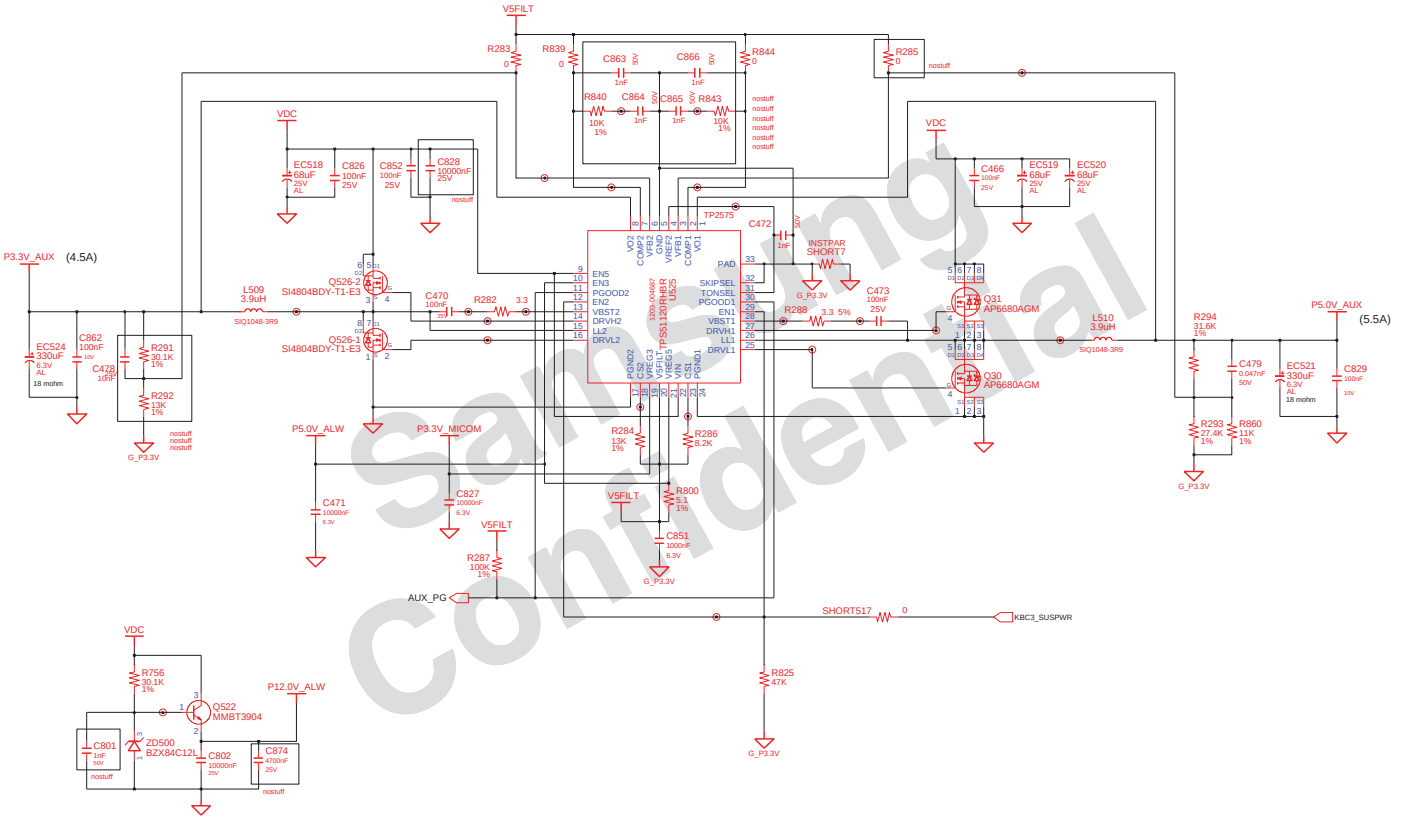

Samsung Confidential

http://hobi-elektronika.net

DRAW: TERMI	DATE: 1/10/2008	TITLE: ISTANBUL PWR_MV_3V_5V P3.3V_AUX / P5.0V_AUX	SAMSUNG ELECTRONICS
CHECK: HJ KIM	DEV. STEP: PV		
APPROVAL: SJ PARK	REV: 00		PART NO.: BA41-00920A
MODULE CODE: undefined	LAST EDIT: July 18, 2008 13:52:45 PM		PAGE 53 OF 64

SAMSUNG PROPRIETARY
THIS DOCUMENT CONTAINS CONFIDENTIAL PROPRIETARY INFORMATION THAT IS SAMSUNG ELECTRONICS CO'S PROPERTY. DO NOT DISCLOSE TO OR DUPLICATE FOR OTHERS EXCEPT AS AUTHORIZED BY SAMSUNG.

CHIPSET POWER (P1.05V & P1.5V)

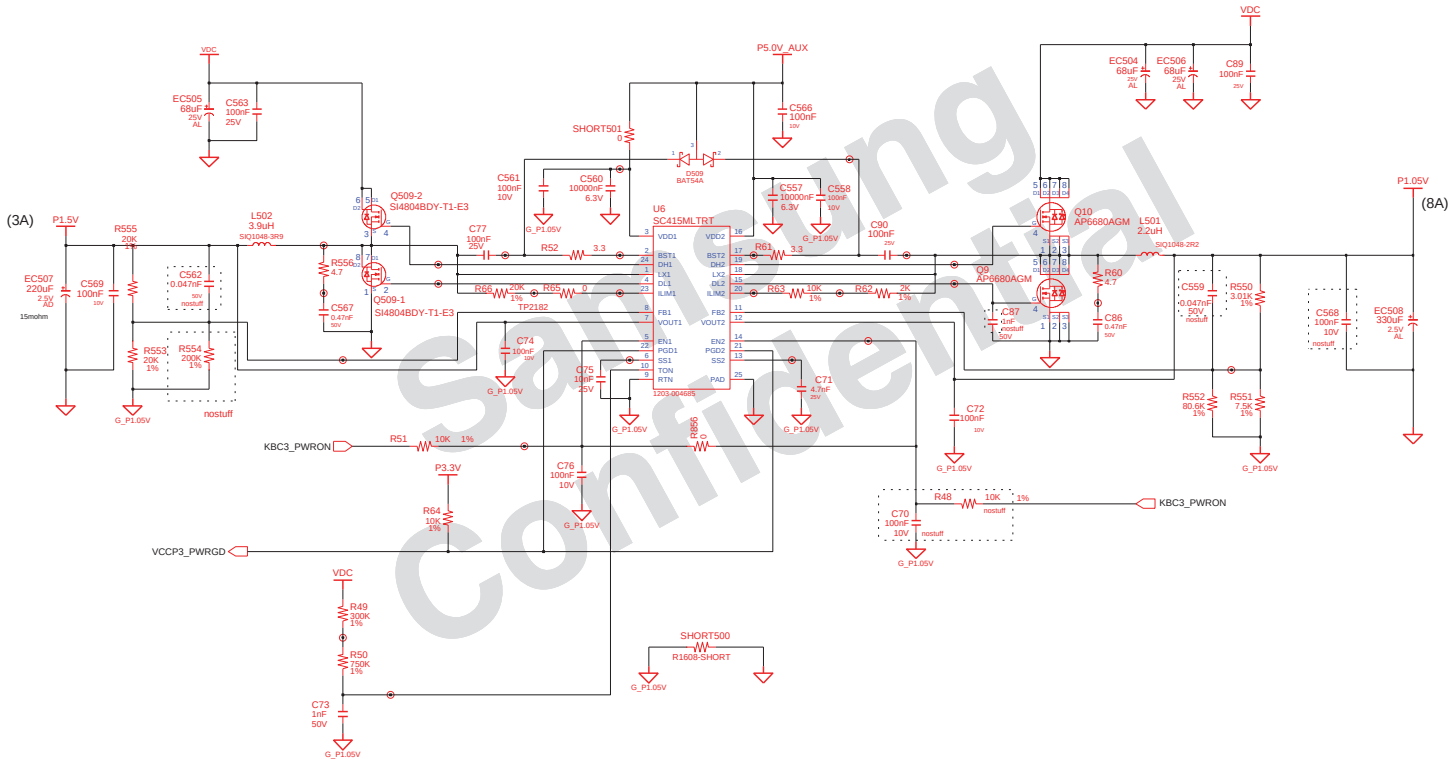

Samsung Confidential

http://hobi-elektronika.net

DRAW: TERMI	DATE: 1/10/2008	TITLE: ISTANBUL PWR_MV_Cantiga Chipset Power (P1.05V_M,P1.2V)	SAMSUNG ELECTRONICS
CHECK: HJ KIM	DEV. STEP: PV		
APPROVAL: SJ PARK	REV: 00		PART NO. BA41-00920A
MODULE CODE: undefined	LAST EDIT: July 18, 2008 13:52:45 PM		PAGE 54 OF 64

SAMSUNG PROPRIETARY
THIS DOCUMENT CONTAINS CONFIDENTIAL PROPRIETARY INFORMATION THAT IS SAMSUNG ELECTRONICS CO'S PROPERTY. DO NOT DISCLOSE TO OR DUPLICATE FOR OTHERS EXCEPT AS AUTHORIZED BY SAMSUNG.

CHARGER & POWER MANAGEMENT

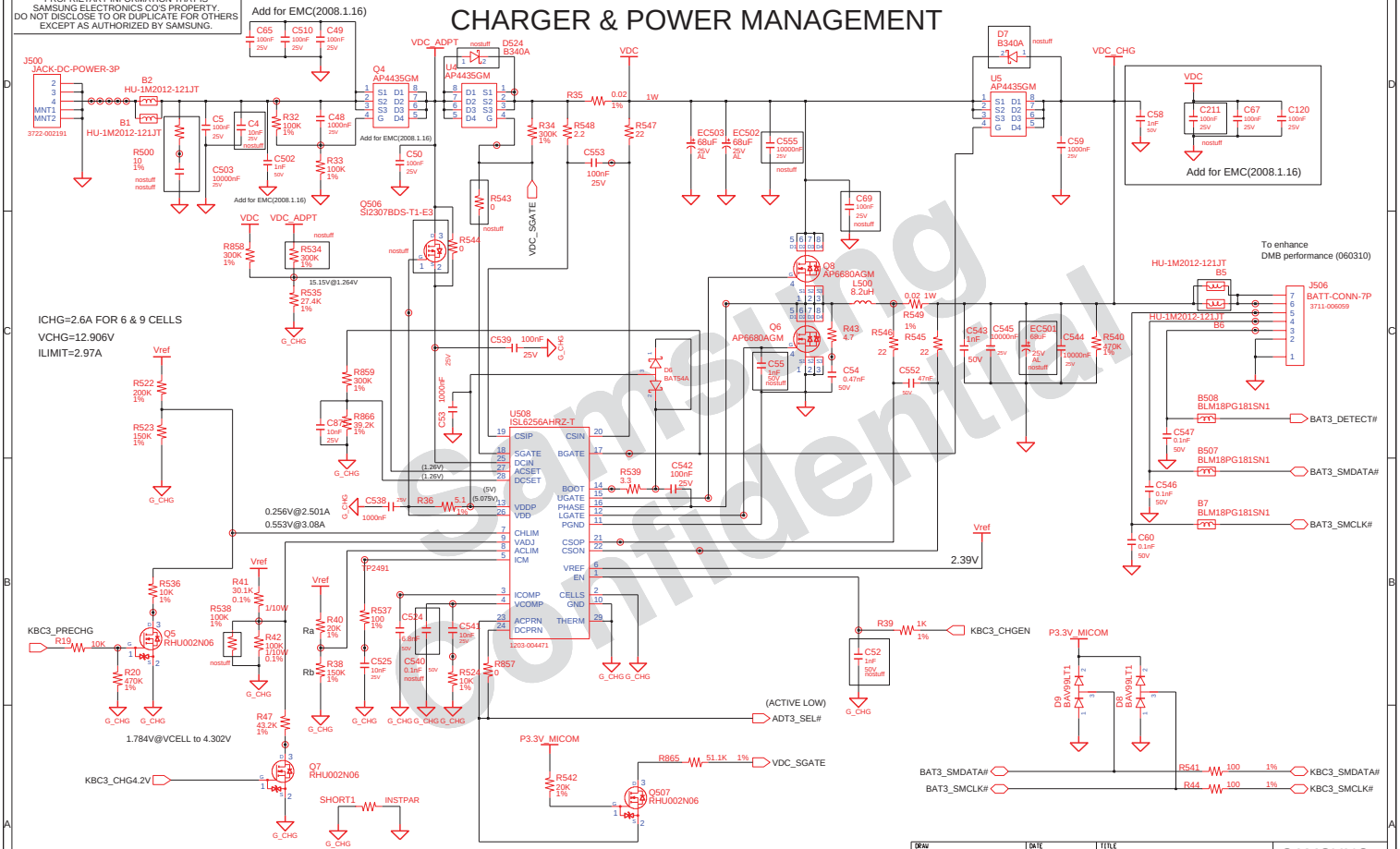

	60W	90W
Ra(R40)	150K(2007-007489)	20k(2007-007312)
Rb(R38)	20K (2007-007312)	150K(2007-007489)
Rlim	470K	470K

http://hobi-elektronika.net

samsung confidential

DRAW: TERMI	DATE: 1/10/2008	TITLE: ISTANBUL PWR_MV_Charger CHARGER	SAMSUNG ELECTRONICS
CHECK: HJ KIM	DEV. STEP: PV		
APPROVAL: SJ PARK	REV: 00		PART NO.: BA41-00920A
MODULE CODE: undefined	LAST EDIT: July 18, 2008 13:52:45 PM		PAGE 55 OF 64

SAMSUNG PROPRIETARY
THIS DOCUMENT CONTAINS CONFIDENTIAL PROPRIETARY INFORMATION THAT IS SAMSUNG ELECTRONICS CO'S PROPERTY. DO NOT DISCLOSE TO OR DUPLICATE FOR OTHERS EXCEPT AS AUTHORIZED BY SAMSUNG.

POWER DISCHARGER

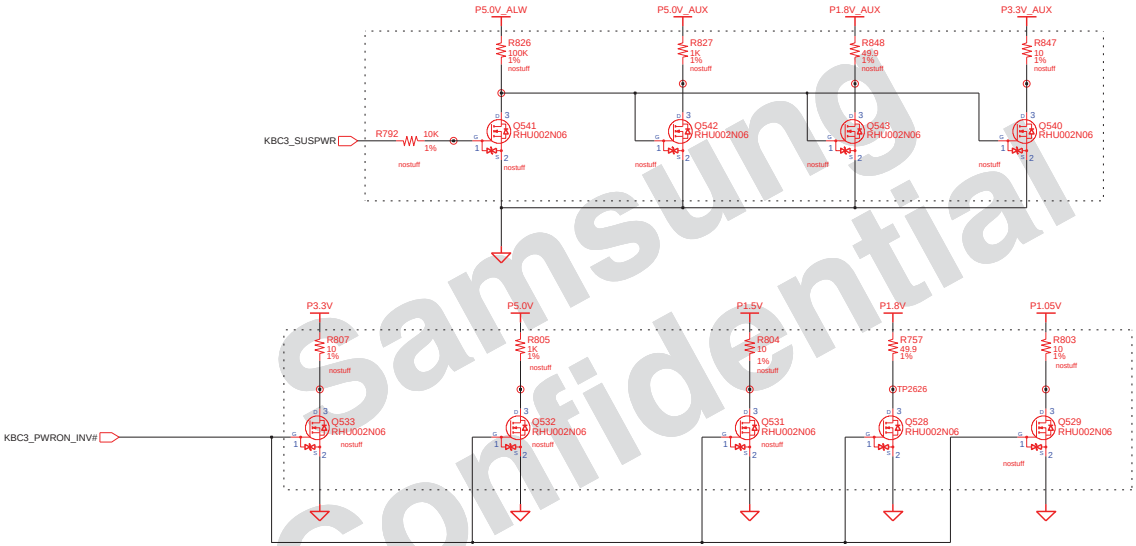

Samsung Confidential

http://hobi-elektronika.net

DRAW: TERMI	DATE: 1/10/2008	TITLE: ISTANBUL PWR_MV_DisCharger DISCHARGING LOGIC	SAMSUNG ELECTRONICS
CHECK: HJ KIM	DEV. STEP: PV		
APPROVAL: SJ PARK	REV: 00		PART NO. BA41-00920A
MODULE CODE: undefined	LAST EDIT: July 18, 2008 13:52:45 PM		PAGE 56 OF 64

SAMSUNG PROPRIETARY
THIS DOCUMENT CONTAINS CONFIDENTIAL PROPRIETARY INFORMATION THAT IS SAMSUNG ELECTRONICS CO'S PROPERTY. DO NOT DISCLOSE TO OR DUPLICATE FOR OTHERS EXCEPT AS AUTHORIZED BY SAMSUNG.

DDR2 Power

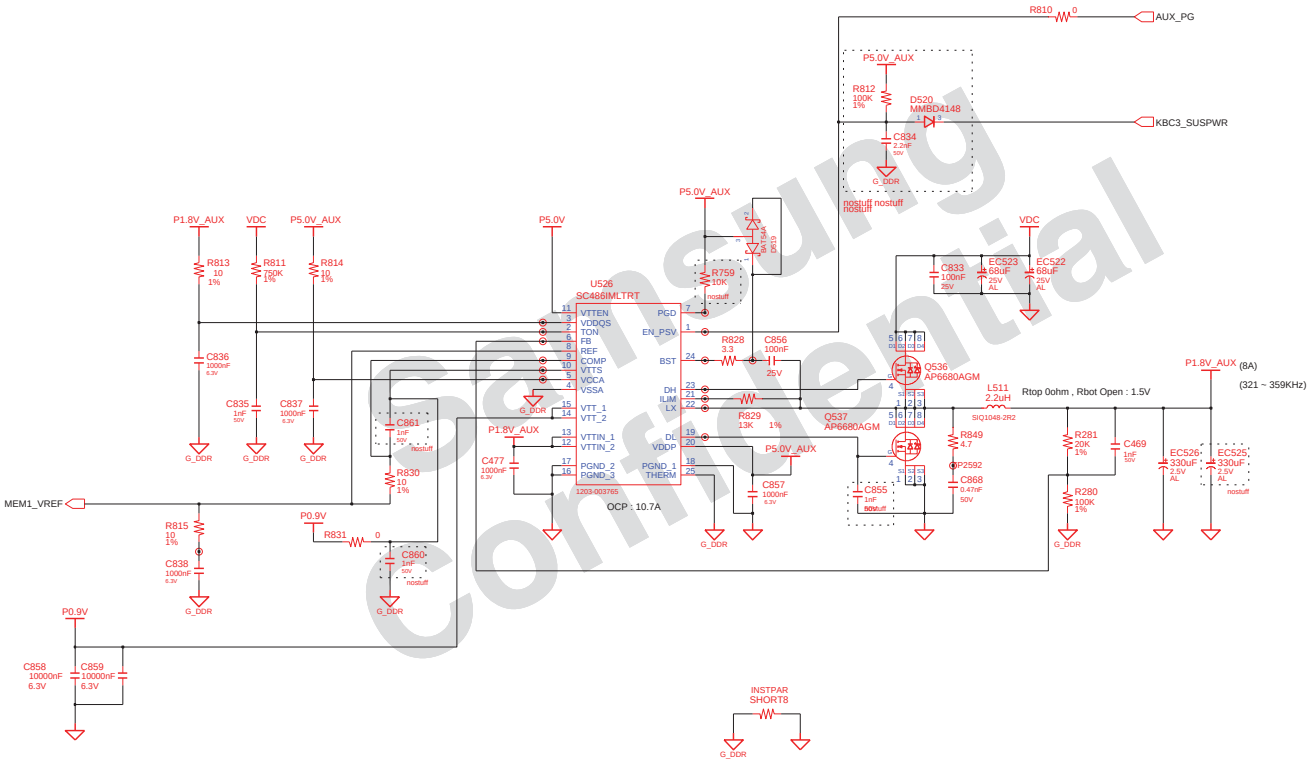

Samsung Confidential

http://hobi-elektronika.net

DRAW: TERMI	DATE: 1/10/2008	TITLE: ISTANBUL PWR_MV_MeMory DDR3 POWER (P1.5V_AUX)	SAMSUNG ELECTRONICS
CHECK: HJ KIM	DEV. STEP: PV		
APPROVAL: SJ PARK	REV: 00		PART NO. BA41-00920A
MODULE CODE: undefined	LAST EDIT: July 18, 2008 13:52:45 PM		PAGE 57 OF 64

SAMSUNG PROPRIETARY
THIS DOCUMENT CONTAINS CONFIDENTIAL PROPRIETARY INFORMATION THAT IS SAMSUNG ELECTRONICS CO'S PROPERTY. DO NOT DISCLOSE TO OR DUPLICATE FOR OTHERS EXCEPT AS AUTHORIZED BY SAMSUNG.

Graphic Core Power

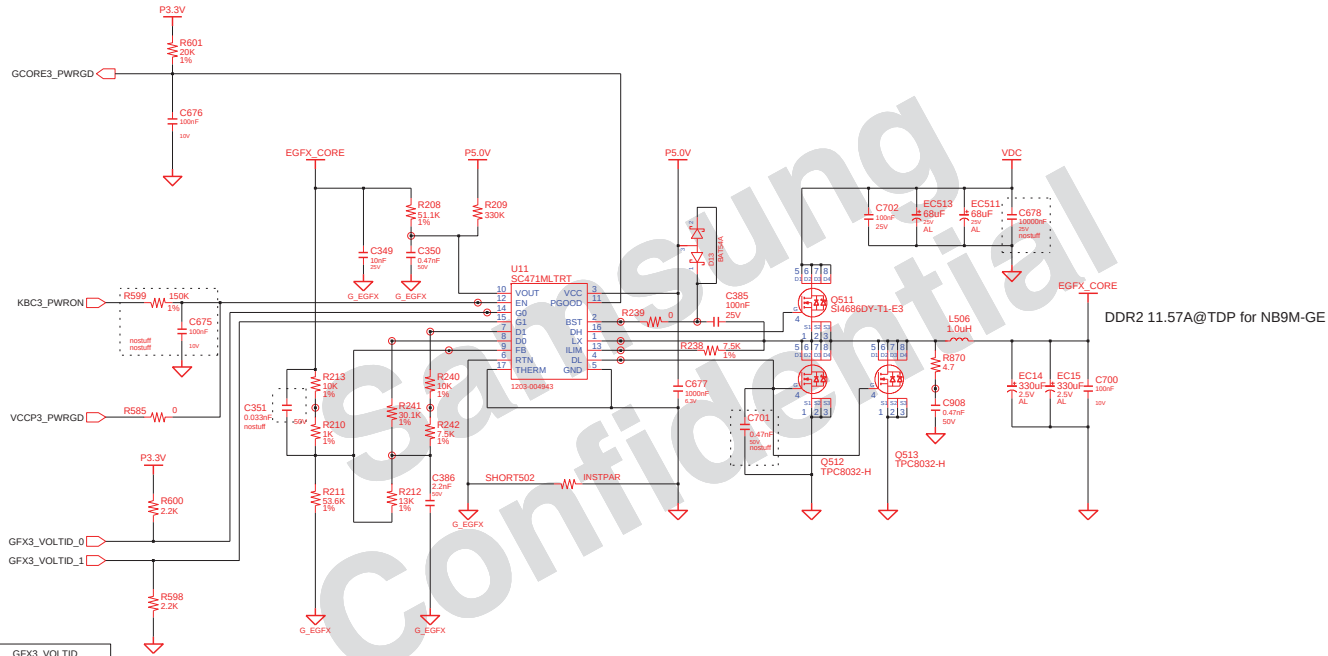

GFX3_VOLTID		
G0	G1	
0	0	0.9V (0.9??V)
1	0	1.09V (1.093V)
0	1	1.17V (1.175V)
1	1	RESERVE

Samsung Confidential

http://hobi-elektronika.net

DRAW: TERMI	DATE: 8/14/2007	TITLE: ISTANBUL PWR_Gfx_MV_Ext Ext Gfx Core(SC471)	SAMSUNG ELECTRONICS
CHECK: HJ KIM	DEV. STEP: PV		
APPROVAL: SJ PARK	REV: 00		PART NO.: BA41-00920A
MODULE CODE	LAST EDIT: July 18, 2008 13:52:45 PM		PAGE 2 OF 2