Page	Title of schematic page	Rev.	Date
01	Page List	1A	
02	Block Diagram	1A	
03	Change List	1A	
04	IVY 1/4(HOST&PCIE)	1A	
05	IVY 2/4(DDR3 I/F)	1A	
06	IVY 3/4(POWER)	1A	
07	IVY 4/4(GND/Strap)	1A	
08	PCH 1/6(DMI/FDI/VIDEO)	1A	
09	PCH 2/6(SATA/RTC/HDA/LPC)	1A	
10	PCH 3/6(PCIE/USB/CLK/NV)	1A	
11	PCH 4/6(GPIO/CPU/STRAP)	1A	
12	PCH 5/6(POWER)	1A	
13	PCH 6/6 (GND)	1A	
14	DDR3 DIMM-0-STD	1A	
15	DDR3 DIMM-1-STD	1A	
16	WPCE985L & FLASH	1A	
17	LVDS/CAMERA	1A	
18	CARD READER(RTS5209)	1A	
19	HDMI/THERMAL	1A	
20	USB	1A	
21	LAN (RTL8111GS)	1A	
22	WLAN/KB-BL	1A	
23	HDD/ODD/G-SENSOR/TP/FAN	1A	
24	Audio ALC233-CG	1A	
25	LED/PS/DMIC	1A	
26	POWER +VCC_CORE (ISL95835)	1A	
27	POWER 3VPCU&RVCC5(PM6686)	1A	
28	POWER 1.5VSUS/VTT_MEM	1A	
29	POWER +1.05V(G5602R41U)-15A	1A	
30	POWER VCCSA/VCCIO	1A	
31	POWER VCC1.8/Thermal	1A	
32	POWER(BAT IN / ADA IN/ UL)	1A	
33	POWER CHARGER (ISL88731C)	1A	
34	POWER VGA_CORE(RT8812A)	1A	
35	POWER VCC1.5_VRAM/1.05V	1A	
36	NVIDIA N14 GB2-64 PCIE 1/4	1A	
37	NVIDIA N14 GB2-64 TMDS 2/4	1A	
38	NVIDIA N14 GB2-64 VRAM 3/4	1A	
39	NVIDIA N14 GB2-64 VRAM 4/4	1A	

Page	Title of schematic page	Rev.	Date
42	HOLE/EMI/KB	1A	
43	AUDIO Woofer	1A	
44	IO PORT LIST	1A	
		1A	

* : No mount
L@ : For LVDS output
D@ : For eDP output
E@ : For DIS GFX
I@ : For UMA

1

Chief River ULV BLOCK DIAGRAM

02

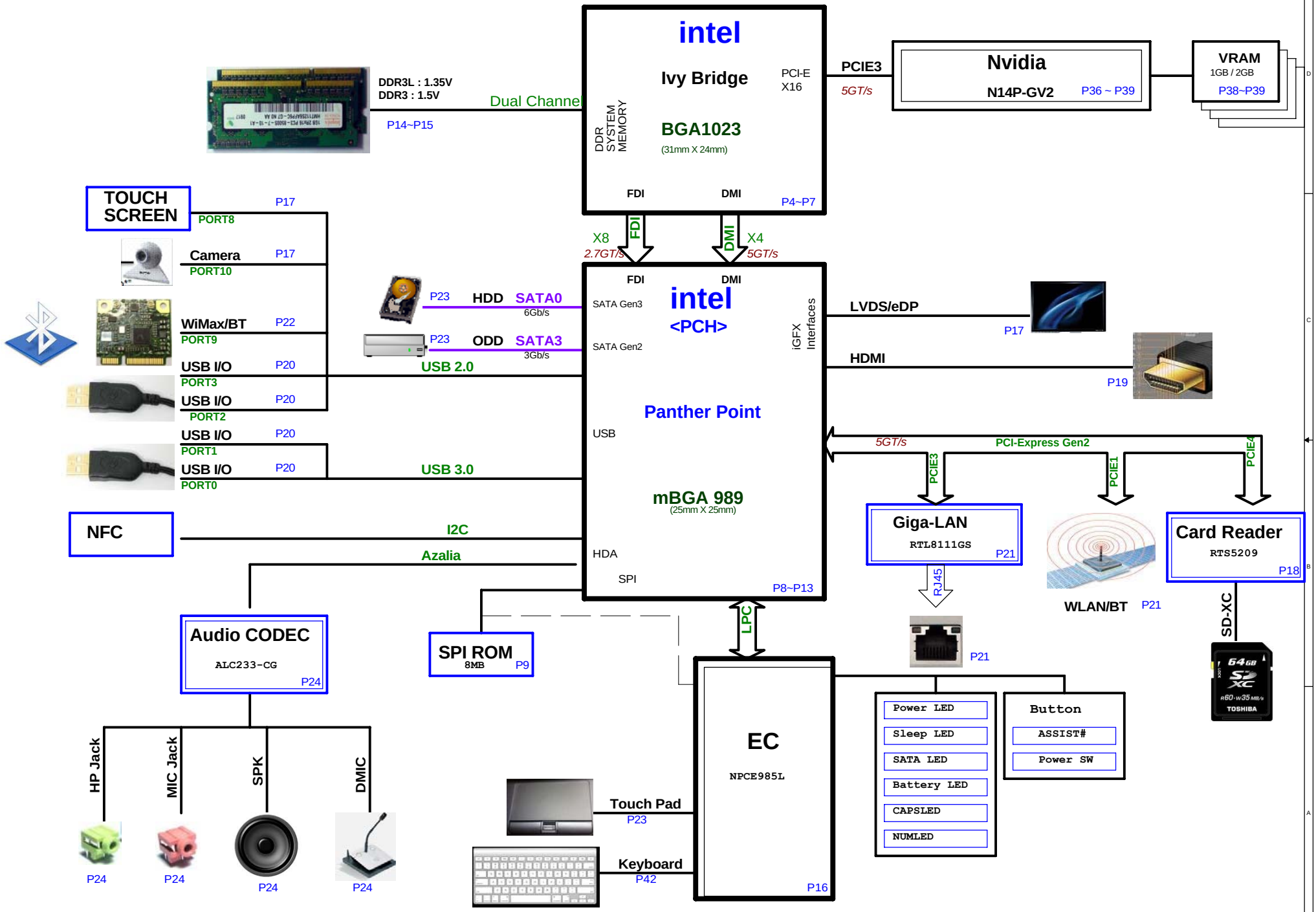

Change List

MB_SCH_PVT_001

P22-Add R333 0_6S.

P22- U15 don't mount

P22-Add Q32(2N7002).

P22-Add R335(100K_4).

Reason : Modify circuit for KB Backlight.
Possible Risk: No.

MB_SCH_PVT_002

P23-CON11.11 delete net"DATA_ODD_DA#

P10-U17.G40 delete net"SATA_ODD_DA#".

P10-Delete R64(10K_4).

Reason : Modify circuit for Zero Power ODD.
Possible Risk: No.

MB_SCH_PVT_002

P08-ADD 0.1UF on "PCH_PWROK_EC"

Reason : Modify circuit for ESD.
Possible Risk: No.

Ivy Bridge Processor (DMI,PEG,FDI)

Ivy Bridge Processor (CLK,MISC,JTAG)

04

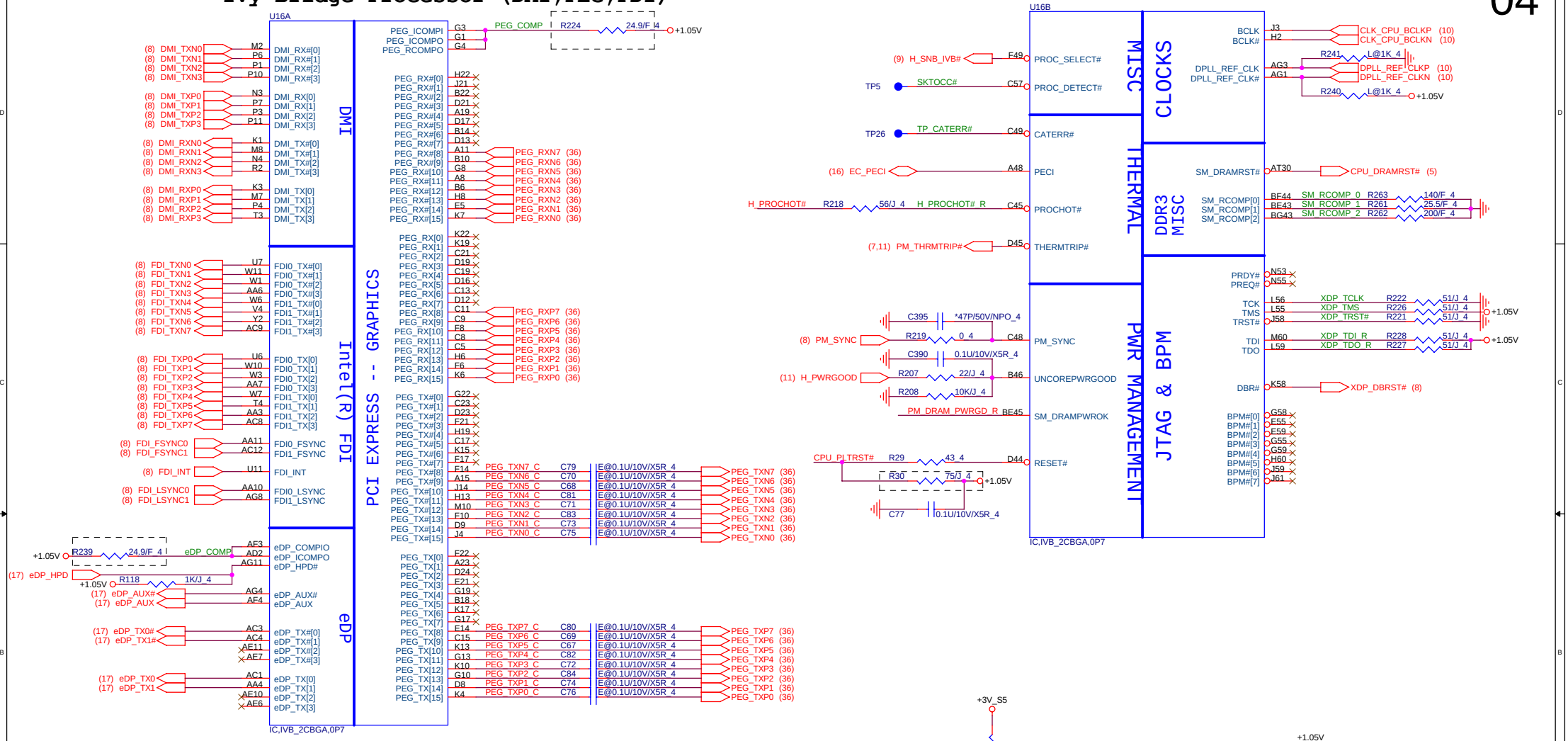

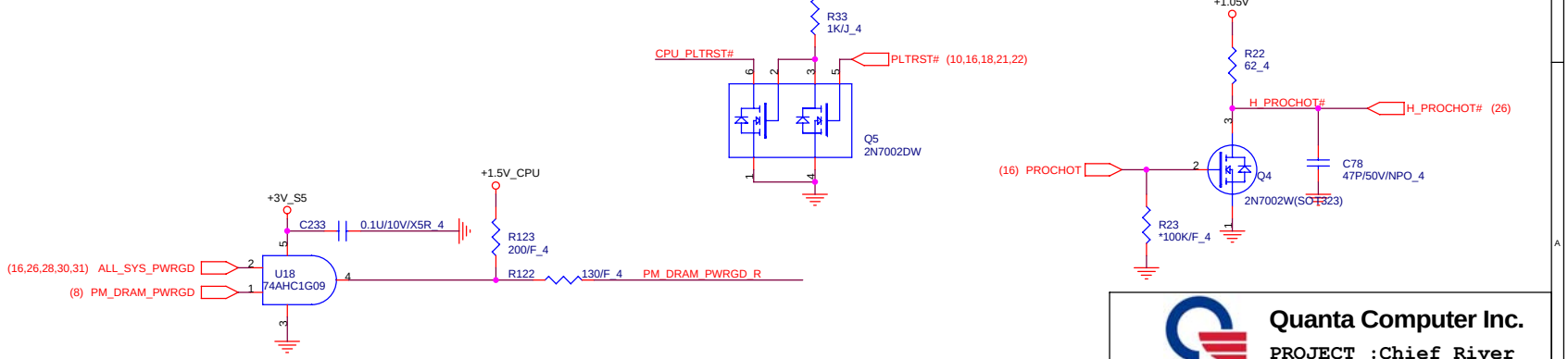

SNB_IVB#:
- It is NC when using Sandy Bridge.(1.05V)
- For next generation processor it will be grounded in package.(1.0V)

FDI Disabling (Discrete Only)

-FDI_FSYNC (J18/J17/J19/H17) can gang all these 4 signals together and tie them with only one 1K resistor to GND (DG V0.5 Ch2.2.9).
- FDI_INT connect to GND with 1K ohm.

1.Level 1 Environment-related Substances Should Never be Used.
2.Recycled Resin and Coated Wire should be procured from Green Partners.

Quanta Computer Inc.

PROJECT :Chief River

Size	Document Number	Rev
	SNB/IVB 1/4	1A

Date: Thursday, January 17, 2013 Sheet 4 of 41

Ivy Bridge Processor (DDR3)

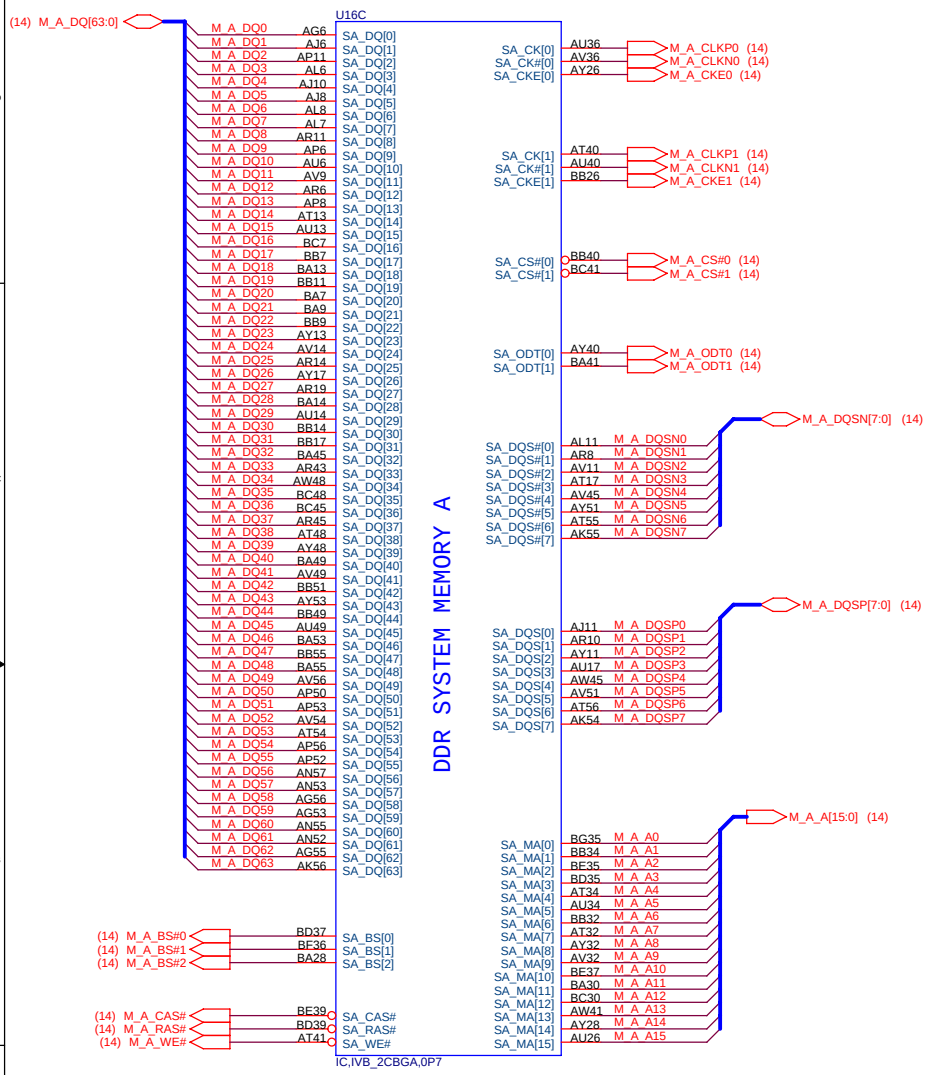

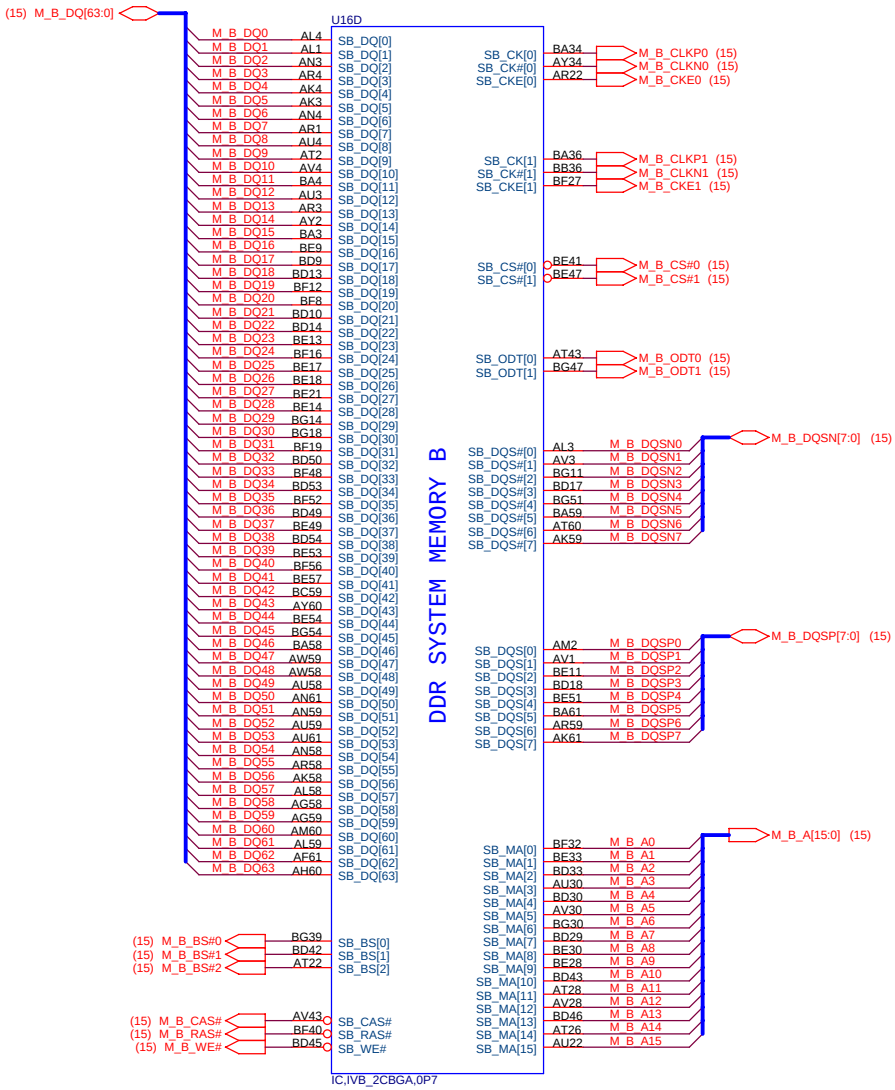

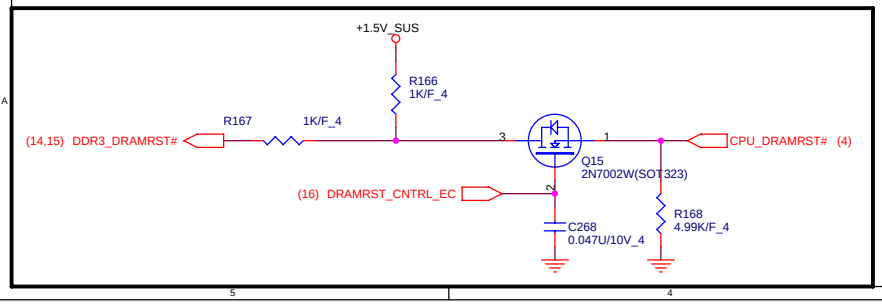

1.Level 1 Environment-related Substances Should Never be Used.
2.Recycled Resin and Coated Wire should be procured from Green Partners.

Quanta Computer Inc.

PROJECT :Chief River

Size	Document Number	Rev
	SNB/IVB 2/4	1A

Date: Thursday, January 17, 2013 Sheet 5 of 41

Ivy Bridge Processor (POWER)

Ivy Bridge Processor (GRAPHIC POWER)

POWER

CPU Core Power

(33A)

+VCC_CORE

U16F

CORE SUPPLY

PEG IO AND DDR IO

QUIET RAILS

SVID

SENSE LINES

+1.05V

(7.1A)

C397 10U/6.3V/X5R_6
C142 10U/6.3V/X5R_6
C204 10U/6.3V/X5R_6
C202 10U/6.3V/X5R_6
C161 10U/6.3V/X5R_6
C153 10U/6.3V/X5R_6
C154 10U/6.3V/X5R_6
C191 10U/6.3V/X5R_6
C398 10U/6.3V/X5R_6
C146 10U/6.3V/X5R_6

C145 1U/6.3V/X5R_4
C192 1U/6.3V/X5R_4
C200 1U/6.3V/X5R_4
C172 1U/6.3V/X5R_4
C174 1U/6.3V/X5R_4
C411 1U/6.3V/X5R_4
C402 1U/6.3V/X5R_4
C420 1U/6.3V/X5R_4
C421 1U/6.3V/X5R_4
C188 1U/6.3V/X5R_4

C177 1U/6.3V/X5R_4
C184 1U/6.3V/X5R_4
C168 1U/6.3V/X5R_4

C179 1U/6.3V/X5R_4
C136 1U/6.3V/X5R_4
C171 1U/6.3V/X5R_4
C141 1U/6.3V/X5R_4
C158 1U/6.3V/X5R_4
C181 1U/6.3V/X5R_4

C90 10U/6.3V/X5R_6
C110 10U/6.3V/X5R_6
C91 10U/6.3V/X5R_6
C118 10U/6.3V/X5R_6
C89 10U/6.3V/X5R_6
C85 10U/6.3V/X5R_6

C127 10U/6.3V/X5R_6
C129 10U/6.3V/X5R_6
C130 10U/6.3V/X5R_6
C88 10U/6.3V/X5R_6
C111 10U/6.3V/X5R_6
C117 10U/6.3V/X5R_6
C132 10U/6.3V/X5R_6
C128 10U/6.3V/X5R_6
C87 10U/6.3V/X5R_6
C86 10U/6.3V/X5R_6
C92 10U/6.3V/X5R_6
C108 10U/6.3V/X5R_6
C131 10U/6.3V/X5R_6
C119 10U/6.3V/X5R_6

VCCIO_SEL BC23 Output for +1.05V or +1.0V

VCCPQE[1] AM25
VCCPQE[2] AN22 — 0.4A — +1.05V

C156 1U/6.3V/X5R_4

VIDALERT# A44 H_CPU_SVIDALRT#
VIDSCLK B43 H_CPU_SVIDCLK
VIDSOUT C44 H_CPU_SVIDDAT

VCC_SENSE F43 — R32 100/F_4 — +VCC_CORE — VCC_SENSE (26)
VSS_SENSE G43 — R31 100/F_4 — VSS_SENSE (26)

VCCIO_SENSE AN16 — R81 10/F_4 — +1.05V — VCCP_SENSE (29)
VSS_SENSE_VCCIO AN17 — R79 10/F_4 — VSSP_SENSE (29)

HOLE1

*intel-CPU-bracket

IC,IVB_2CBGA,0P7

POWER

+VCC_GFX (25A)

U16G

PDC: 10ux8

C427 10U/6.3V/X5R_6
C122 10U/6.3V/X5R_6
C418 10U/6.3V/X5R_6
C417 22U/6.3V/X5R_8
C137 22U/6.3V/X5R_8
C157 22U/6.3V/X5R_8
C148 10U/6.3V/X5R_6
C166 22U/6.3V/X5R_8

C175 10U/6.3V/X5R_6
C426 22U/6.3V_8

VREF

SM_VREF — R89 1K/F_4 — +1.5V_CPU
(Trace=10mil) — +VDDR_REF_CPU
R83 1K/F_4
C207 0.1U/10V/X5R_4

SA_DIMM_VREFDQ BE7
SB_DIMM_VREFDQ BG7

GRAPHICS DDR3 - 1.5V RAILS

(4.75A) +1.5V_CPU

C149 10U/6.3V/X5R_6
C240 10U/6.3V/X5R_6
C176 10U/6.3V/X5R_6
C150 10U/6.3V/X5R_6
C152 10U/6.3V/X5R_6
C151 10U/6.3V/X5R_6

C189 1U/6.3V/X5R_4
C187 1U/6.3V/X5R_4
C164 1U/6.3V/X5R_4
C193 1U/6.3V/X5R_4

SENSE LINES

+VCC_GFX — R39 100_4 — (26) VCC_AXG_SENSE — VAXG_SENSE F45
(26) VSS_AXG_SENSE — R38 100_4 — VSSAXG_SENSE G45

QUIET RAILS

VCCDQ[1] AM28
VCCDQ[2] AN26 — (0.6A) — +1.5V_CPU

C165 1U/6.3V/X5R_4

1.8V RAIL

+1.8V (0.93A)

C432 10U/6.3V/X5R_6
C433 1U/6.3V/X5R_4
C434 1U/6.3V/X5R_4

VCCPLL[1] BB3
VCCPLL[2] BC1
VCCPLL[3] BC4

SA RAIL

+VCCSA (4.5A)

C115 10U/6.3V/X5R_6
C125 10U/6.3V/X5R_6
C391 10U/6.3V/X5R_6
C392 *10U/6.3V/X5R_6

C113 1U/6.3V/X5R_4
C114 1U/6.3V/X5R_4
C124 1U/6.3V/X5R_4

SENSE LINES

VDDQ_SENSE BC43
VSS_SENSE_VDDQ BA43

VCCSA_SENSE U10 — VCCUSA_SENSE (30)

VCCSA VID lines

VCCSA_VID[0] D48 — VCCSA_VID0 (30)
VCCSA_VID[1] D49 — VCCSA_VID1 (30)

IC,IVB_2CBGA,0P7

HR/CR: HR(VID1 only) CR(VID0&VID1)

VCCIO_SEL:
Sandy is High = 1.05V
Ivy is Low = 1.0V

Layout note: need routing together and ALERT need between CLK and DATA

SVID CLK

+1.05V — **Close to VR** — R57 54.9/F_4

H_CPU_SVIDCLK — R211 0_4 — VR_SVID_CLK (26)
(50 ohm)

Place PU resistor close to CPU

+1.05V — R212 130/F_4

SVID DATA

+1.05V — **Close to VR** — R66 130/F_4

H_CPU_SVIDDAT — R213 0_4 — VR_SVID_DATA (26)
(50 ohm)

Place PU resistor close to CPU

+1.05V — R215 75/J_4

SVID ALERT

H_CPU_SVIDALRT# — R214 43_4 — R216 0_4 — VR_SVID_ALERT# (26)
(50 ohm)

SNB:6A

1.Level 1 Environment-related Substances Should Never be Used.
2.Recycled Resin and Coated Wire should be procured from Green Partners.

Quanta Computer Inc.

PROJECT :Chief River

Size	Document Number	Rev
	SNB/IVB 3/4	1A

Date: Thursday, January 17, 2013 Sheet 6 of 41

Ivy Bridge Processor (GND)

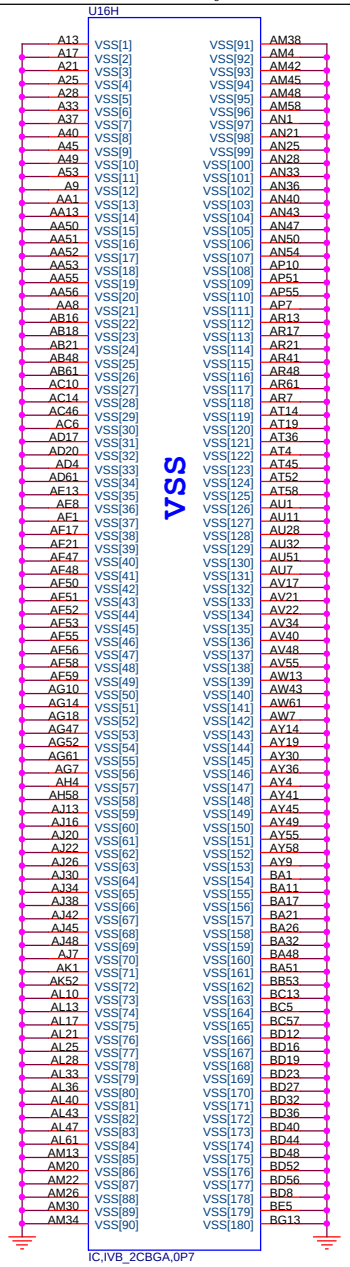

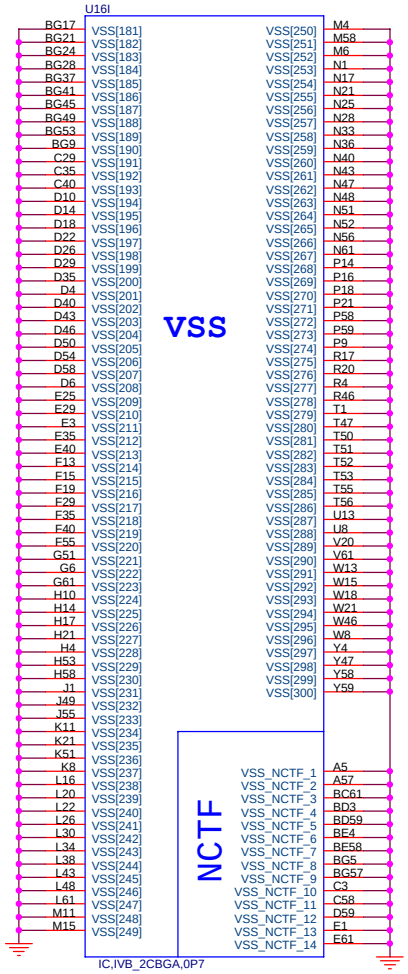

Ivy Bridge Processor (RESERVED, CFG)

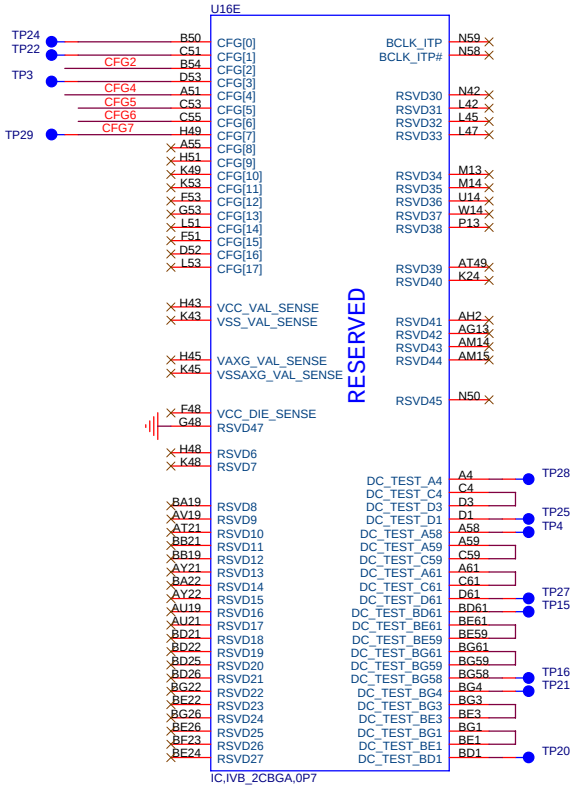

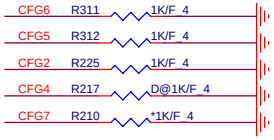

The CFG signals have a default value of '1' if not terminated on the board.

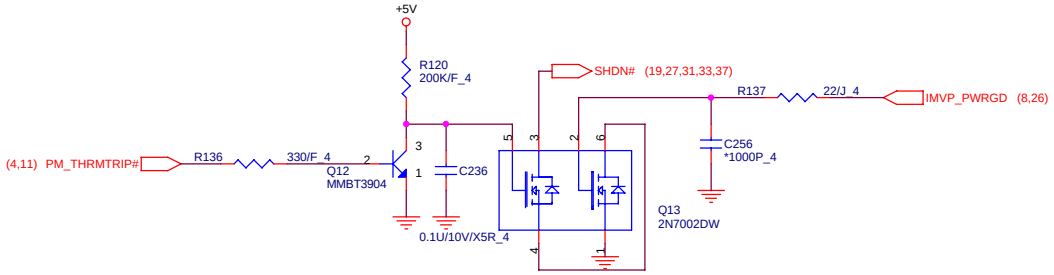

Processor Strapping

	1	0
CFG2 (PEG Static Lane Reversal)	Normal Operation	**Lane Reversed**
CFG4 (DP Presence Strap)	**Disable; No physical DP attached to eDP**	Enable; An ext DP device is connected to eDP
CFG7 (PEG Defer Training)	**PEG train immediately following xxRESETB de assertion**	PEG wait for BIOS training

CFG[6:5] (PCIE Port Bifurcation Straps)

11: (Default) x16 - X16 PEG interface
10: PEG x8 x8 bifurcation enableddisabled
01: Reserved - (Device 1 function 1 disabled ; function 2 enabled)
00: x8,x4,x4 - Device 1 functions 1 and 2 enabled

1.Level 1 Environment-related Substances Should Never be Used.
2.Recycled Resin and Coated Wire should be procured from Green Partners.

Quanta Computer Inc.

PROJECT :Chief River

Size	Document Number	Rev
	SNB/IVB 4/4	1A

Date: Thursday, January 17, 2013 Sheet 7 of 41

CPT/PPT (DMI,FDI,PM)

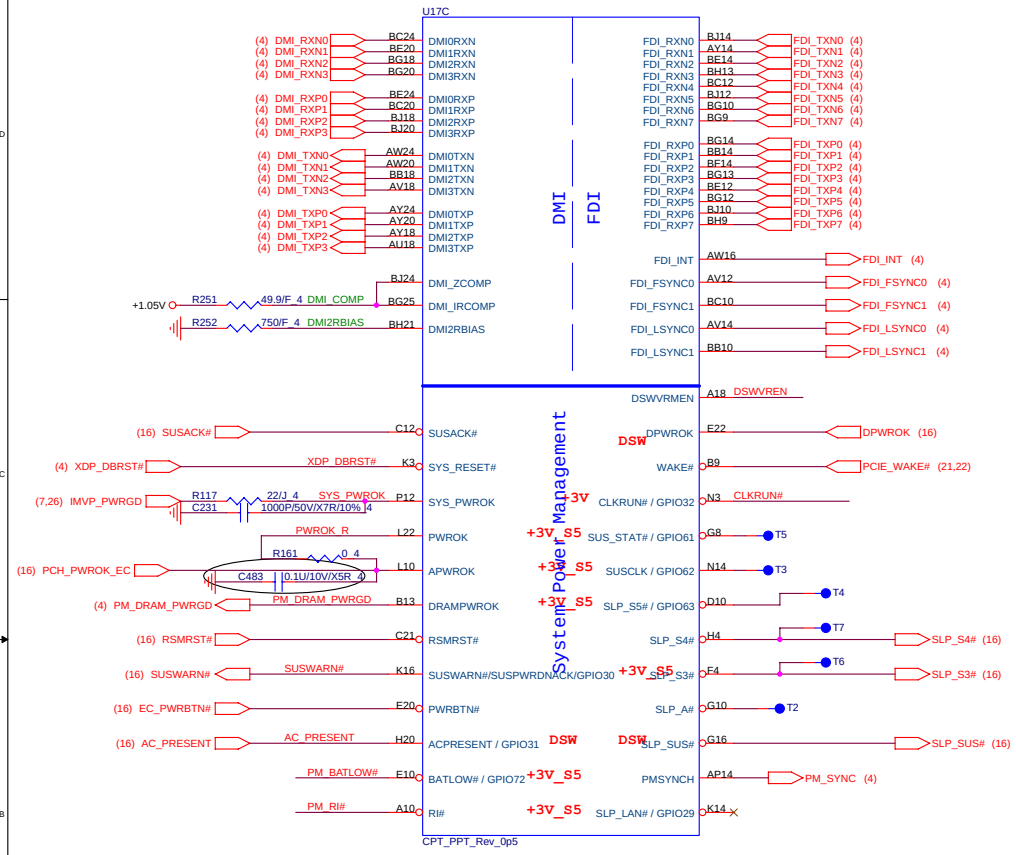

CPT/PPT (LVDS,DDI)

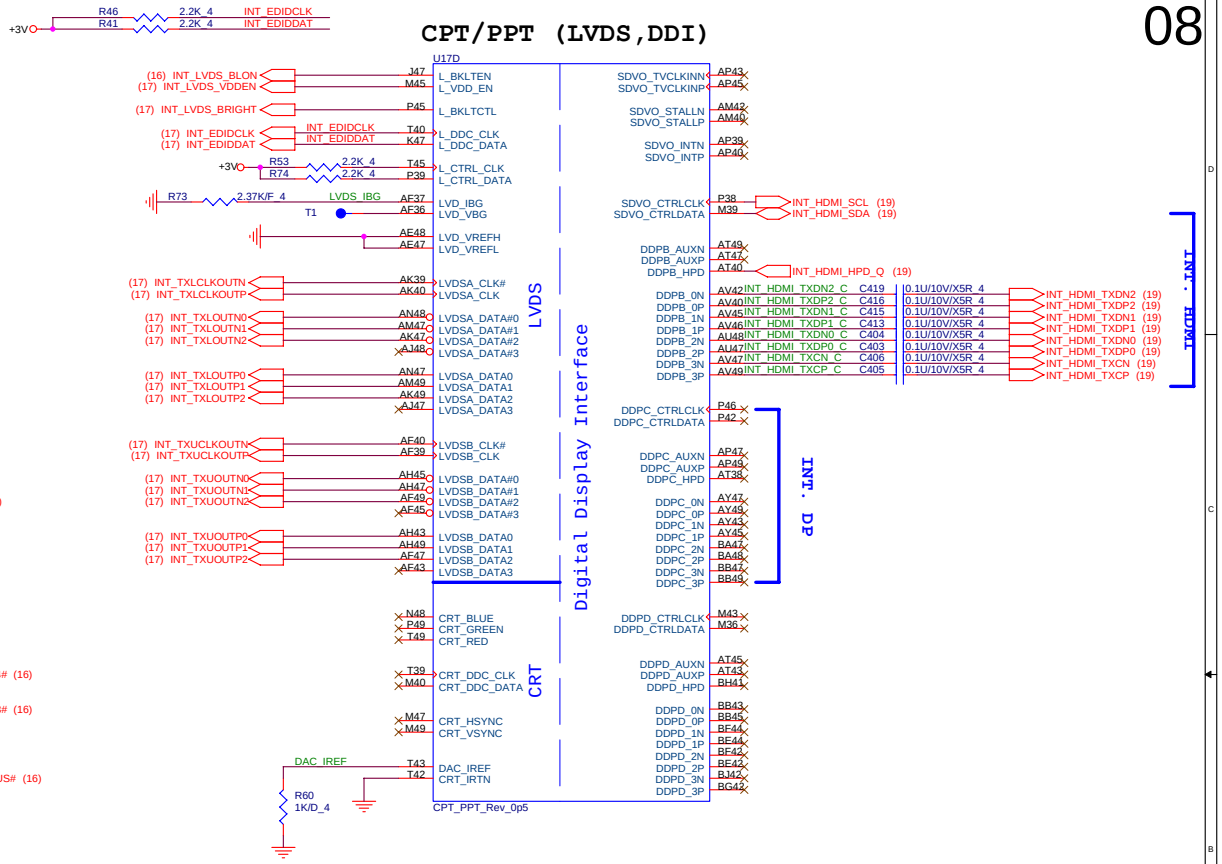

PCH Pull-high/low(CLG)

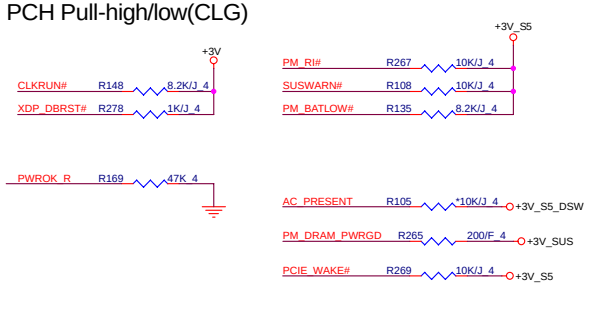

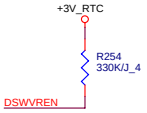

On Die DSW VR Enable
High = Enable (Default)
Low = Disable

1.Level 1 Environment-related Substances Should Never be Used.
2.Recycled Resin and Coated Wire should be procured from Green Partners.

Quanta Computer Inc.

PROJECT :Chief River

Size	Document Number	Rev
	CPT/PTT 1/6	1A

Date: Thursday, January 17, 2013 Sheet 8 of 41

RTC Circuitry(RTC)

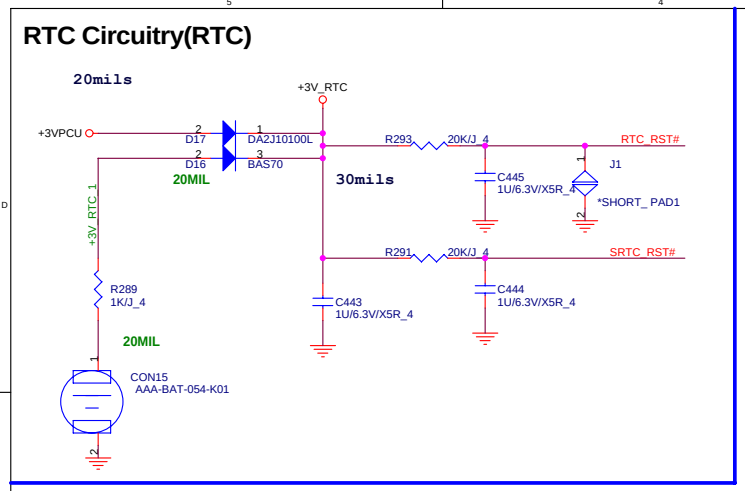

MX25L3205DM2I-12G: AKE39FP0Z00
W25X32VSSIG: AKE39ZP0N00

PCH SPI (CLG)

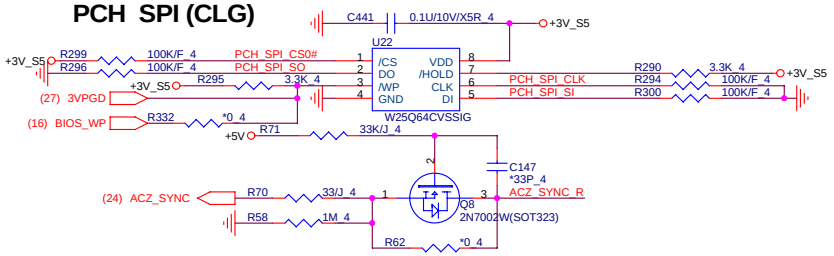

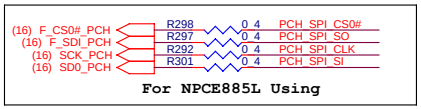

CPT/PPT (HDA,JTAG,SATA)

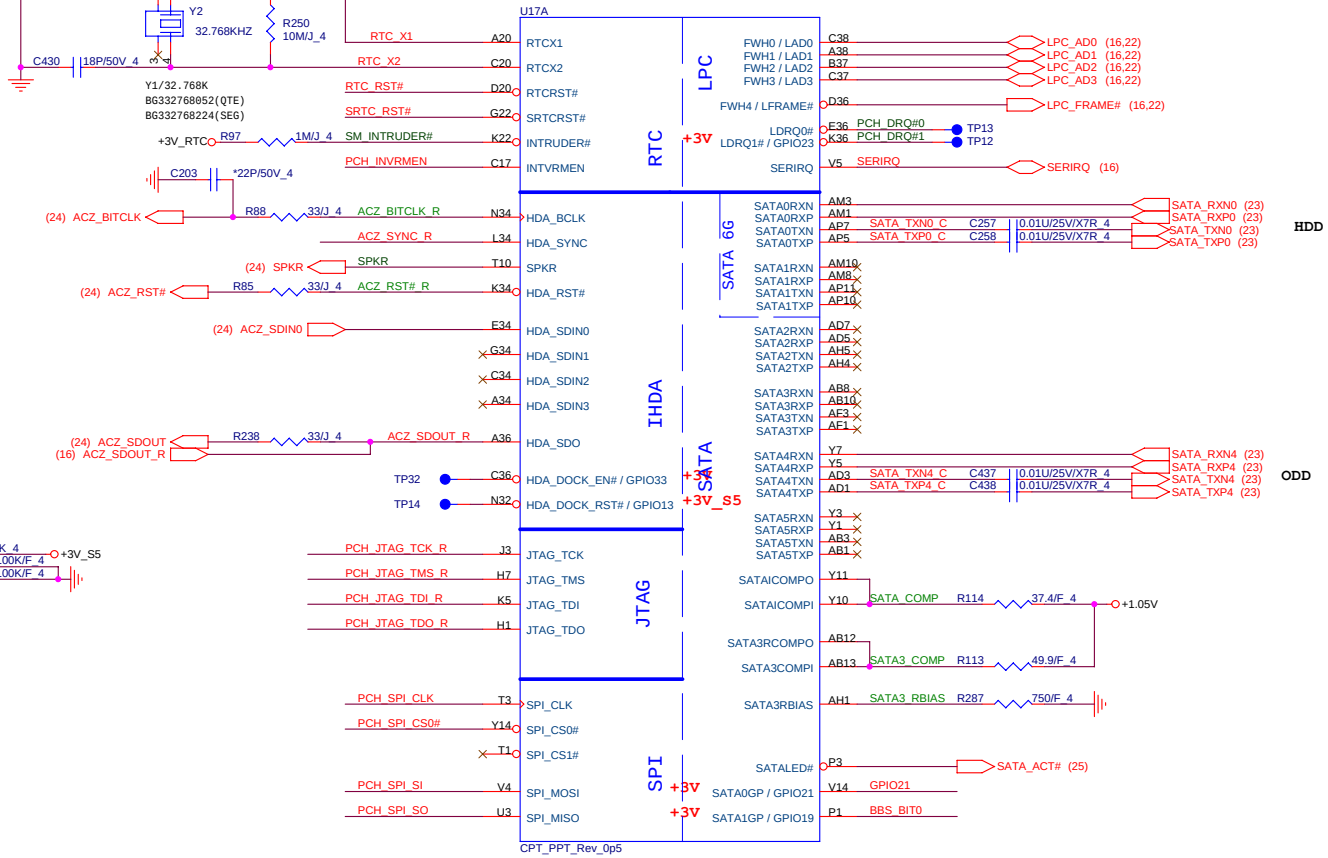

PCH Strap Table

Pin Name	Strap description	Sampled	Configuration	Note
SPKR	No reboot mode setting	PWROK	**0 = Default (weak pull-down 20K)** 1 = Setting to No-Reboot mode	SPKR
PCI_GNT3# / GPIO55	Top-Block Swap Override	PWROK	0 = "top-block swap" mode **1 = Default (weak pull-up 20K)**	TP7 — PCI_GNT3# (10)
INTVRMEN	Integrated 1.05V VRM enable	ALWAYS	**Should be always pull-up**	+3V_RTC — R255 330K/J_4 — PCH_INVRMEN
GNT1# / GPIO51	Boot BIOS Selection 1 [bit-1]	PWROK	GNT1# / GNT0# / Boot Location 1 / 1 / **SPI** ★ 0 / 0 / LPC	**Default weak pull-up on GNT0/1#** **[Need external pull-down for LPC BIOS]** TP30 — BBS_BIT1 (10) TP33 — BBS_BIT0
GPIO19	Boot BIOS Selection 0 [bit-0]	PWROK		
HDA_SDO	Flash Descriptor Security	PWROK	0 = Default (weak pull-down 20K) 1 = Enabled	**ACZ_SDOUT_R**
DF_TVS	DMI/FDI Termination voltage	PWROK	0 = Set to Vss for Ivy Bridge 1 = Set to Vcc for Sandy Bridge (weak pull-down 20K)	R282 2.2K_4 +1.8V R276 1K/J_4 — NV_CLE (11) H_SNB_IVB# (4)
GPIO28	On-die PLL Voltage Regulator	RSMRST#	0 = Disable 1 = Enable (Default)	TP19 — PLL_ODVR_EN (11)
HDA_SYNC	On-Die PLL VR Voltage Select	RSMRST	0 = Support by 1.8V (weak pull-down) 1 = Support by 1.5V	+3V_S5 — R65 1K/J_4 — ACZ_SYNC_R

HR/CR: PROCSEL#

PCH JTAG Debug (CLG)

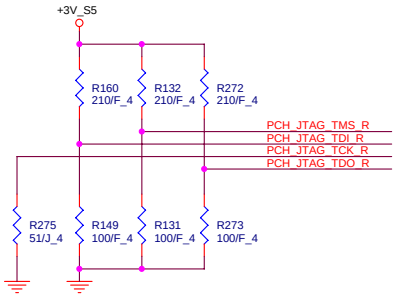

1.Level 1 Environment-related Substances Should Never be Used.
2.Recycled Resin and Coated Wire should be procured from Green Partners.

Quanta Computer Inc.
PROJECT :Chief River

Size	Document Number	Rev
	CPT/PPT 2/6	1A

Date: Thursday, January 17, 2013 Sheet 9 of 41

CPT/PPT (PCI,USB,NVRAM)

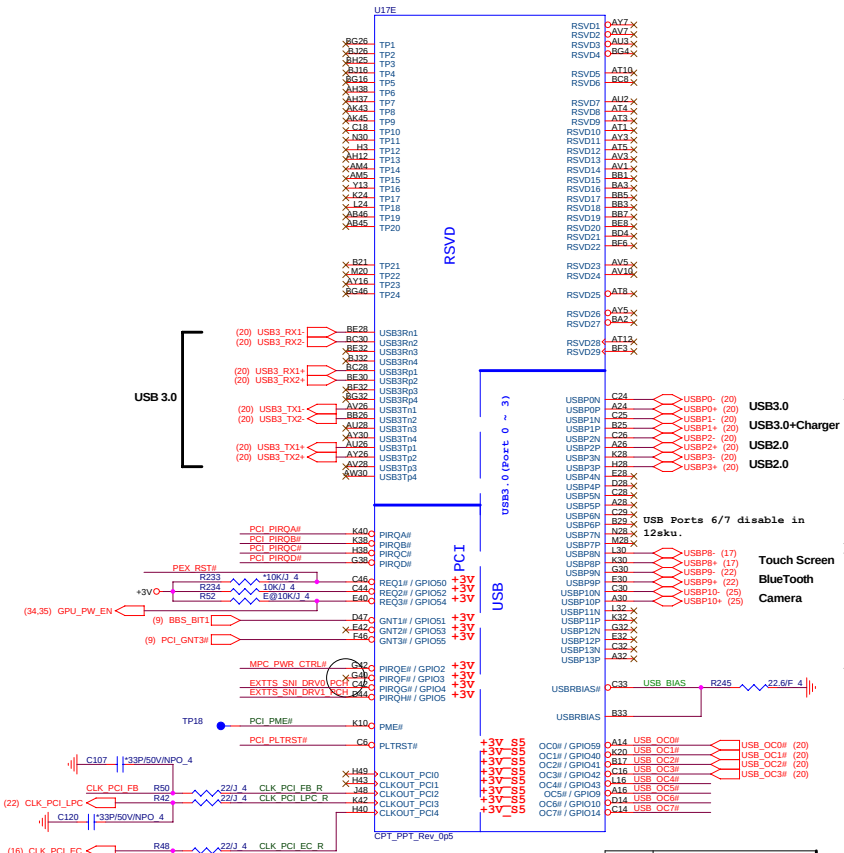

OC	USB Port
OC0#	0
OC1#	1
OC2#	2
OC3#	3
OC4#	NC
OC5#	NC
OC6#	NC
OC7#	Floater OC# (not used)

CPT/PPT (PCI-E,SMBUS,CLK)

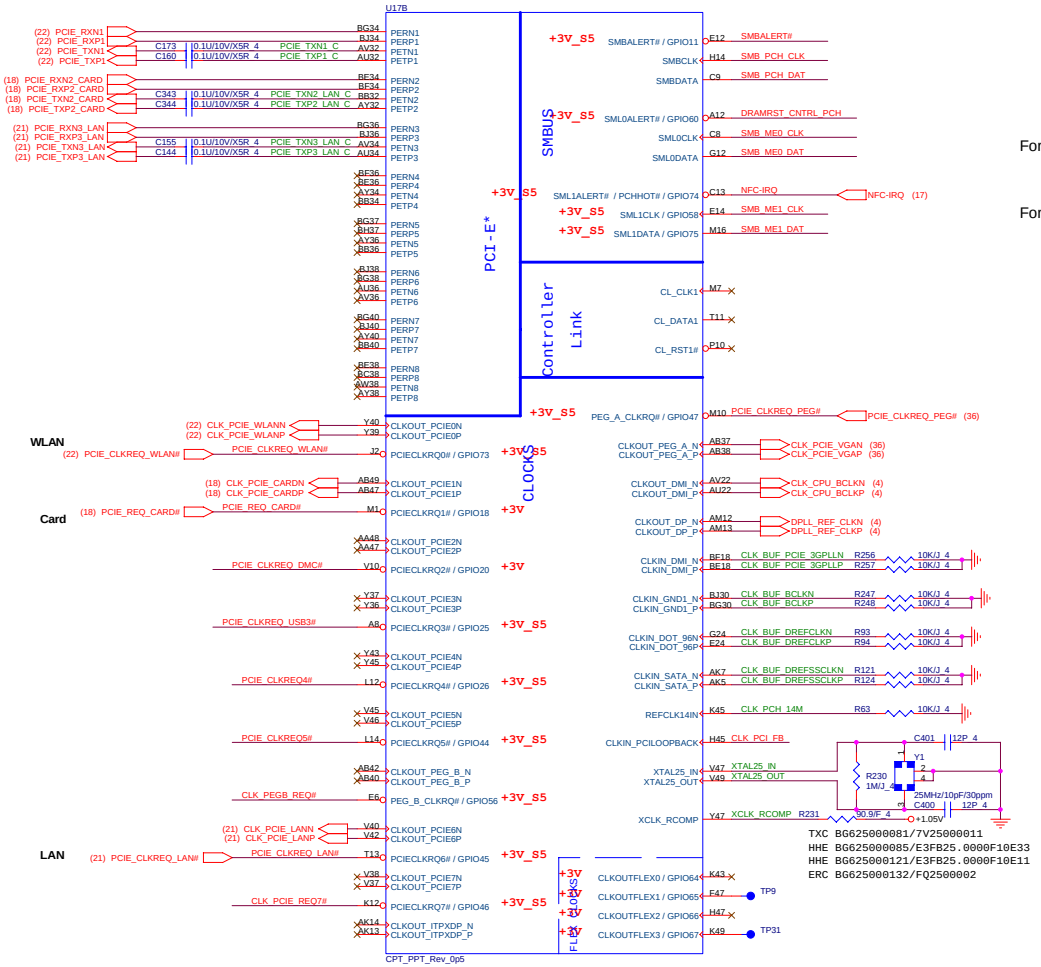

TXC BG625000081/7V25000011
HHE BG625000085/E3FB25.0000F10E33
HHE BG625000121/E3FB25.0000F10E11
ERC BG625000132/FQ2500002

PLTRST#(CLG)

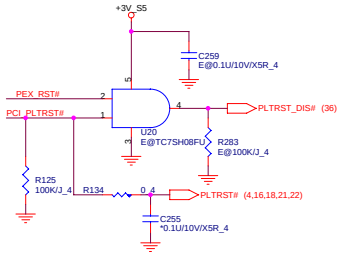

PCI/USBOC# Pull-up(CLG)

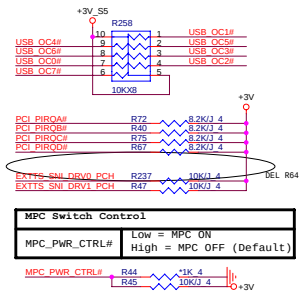

MPC Switch Control	
MPC_PWR_CTRL#	Low = MPC ON High = MPC OFF (Default)

CLK_REQ/Strap Pin(CLG)

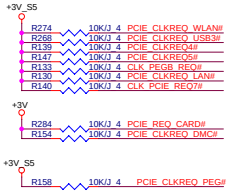

SMBus/Pull-up(CLG)

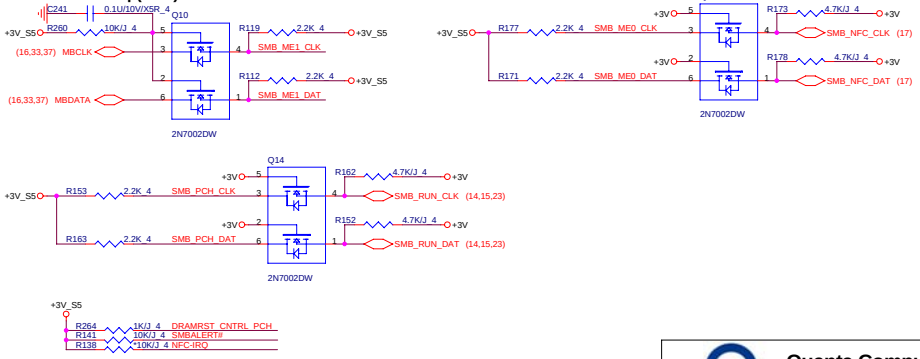

1.Level 1 Environment-related Substances Should Never be Used.
2.Recycled Resin and Coated Wire should be procured from Green Partners.

Quanta Computer Inc.
PROJECT :Chief River

Size	Document Number	Rev
	CPT/PPT 3/6	1A

Date: Thursday, January 17, 2013 Sheet 10 of 41

CPT/PPT (GPIO,VSS_NCTF,RSVD)

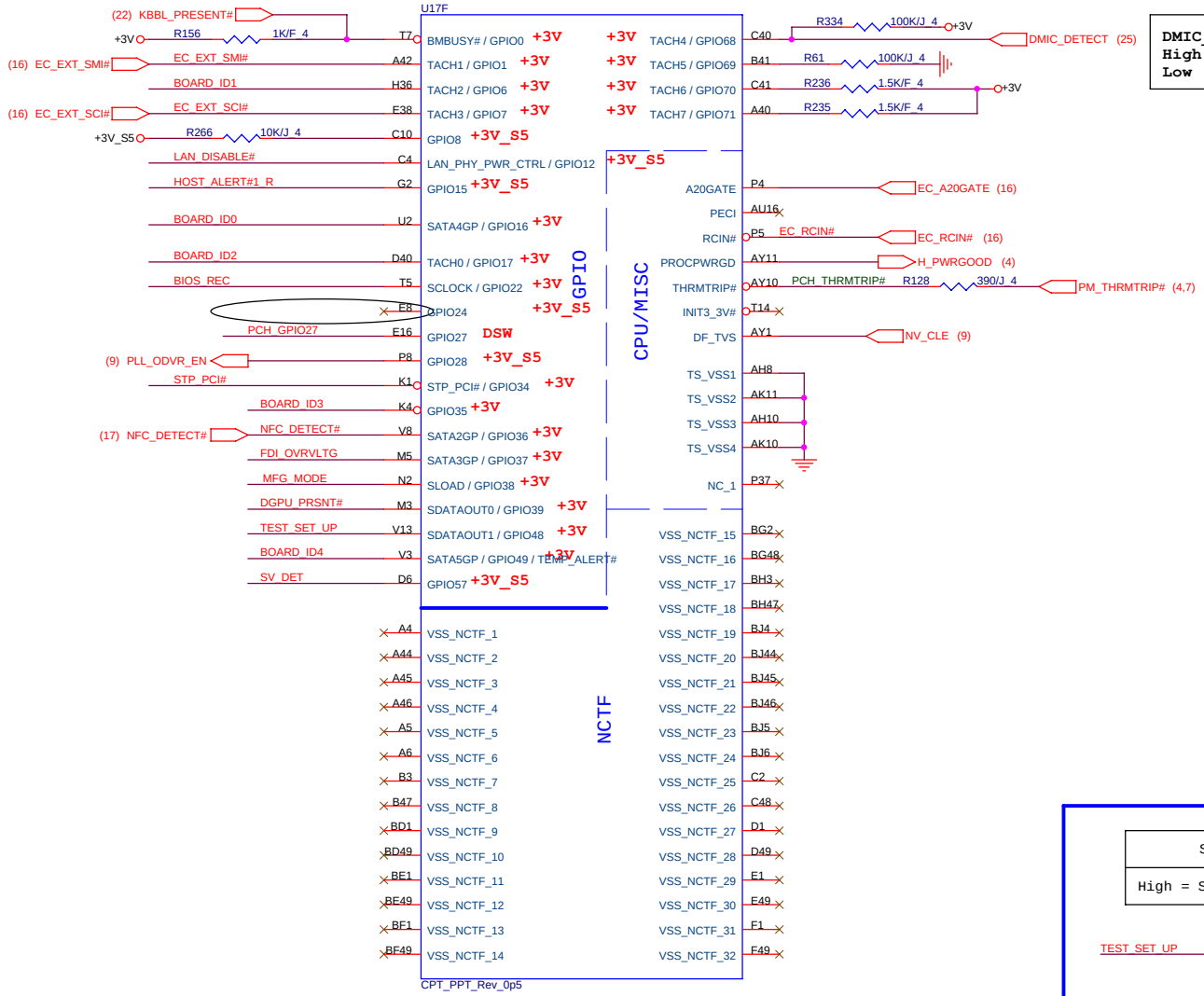

DMIC_DETECT:
High : Single DMIC
Low : Dual DMIC

GPIO Pull-up/Pull-down(CLG)

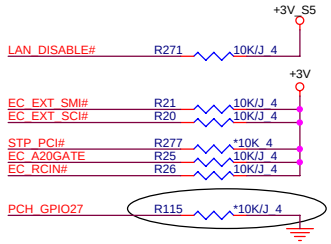

Change to no mount

	0	1
Board ID0	CaspiCRA1-CaspiCRB1 HK8-HK9	SuperiorCRA1-SuperiorCRB1 GD5-GD6
Board ID1	HK8/GD5 14"	HK9/GD6 15"

SV_SET_UP
High = Strong (Default)

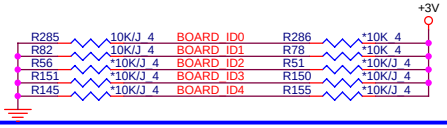

Intel ME Crypto Transport Layer Security (TLS) cipher suite
Low = Disable (Default)
High = Enable

PCBA SKU	Discrete	UMA
R280(Pull High)	Stuff	No Stuff
R279(Pull Low)	No Stuff	Stuff

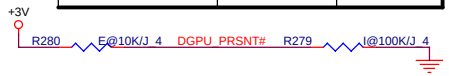

FDI TERMINATION VOLTAGE OVERRIDE	LOW - Tx, Rx terminated to same voltage

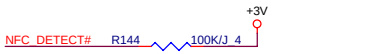

NFC Detect	High : No NFC Module Plug Low : NFC Module Plug

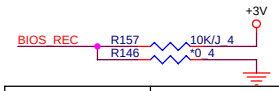

BIOS RECOVERY	High = Disable (Default) Low = Enable

MFG-TEST

1.Level 1 Environment-related Substances Should Never be Used.
2.Recycled Resin and Coated Wire should be procured from Green Partners.

Quanta Computer Inc.
PROJECT :Chief River

Size	Document Number	Rev
	CPT/PPT 4/6	1A

Date: Thursday, January 17, 2013 Sheet 11 of 41

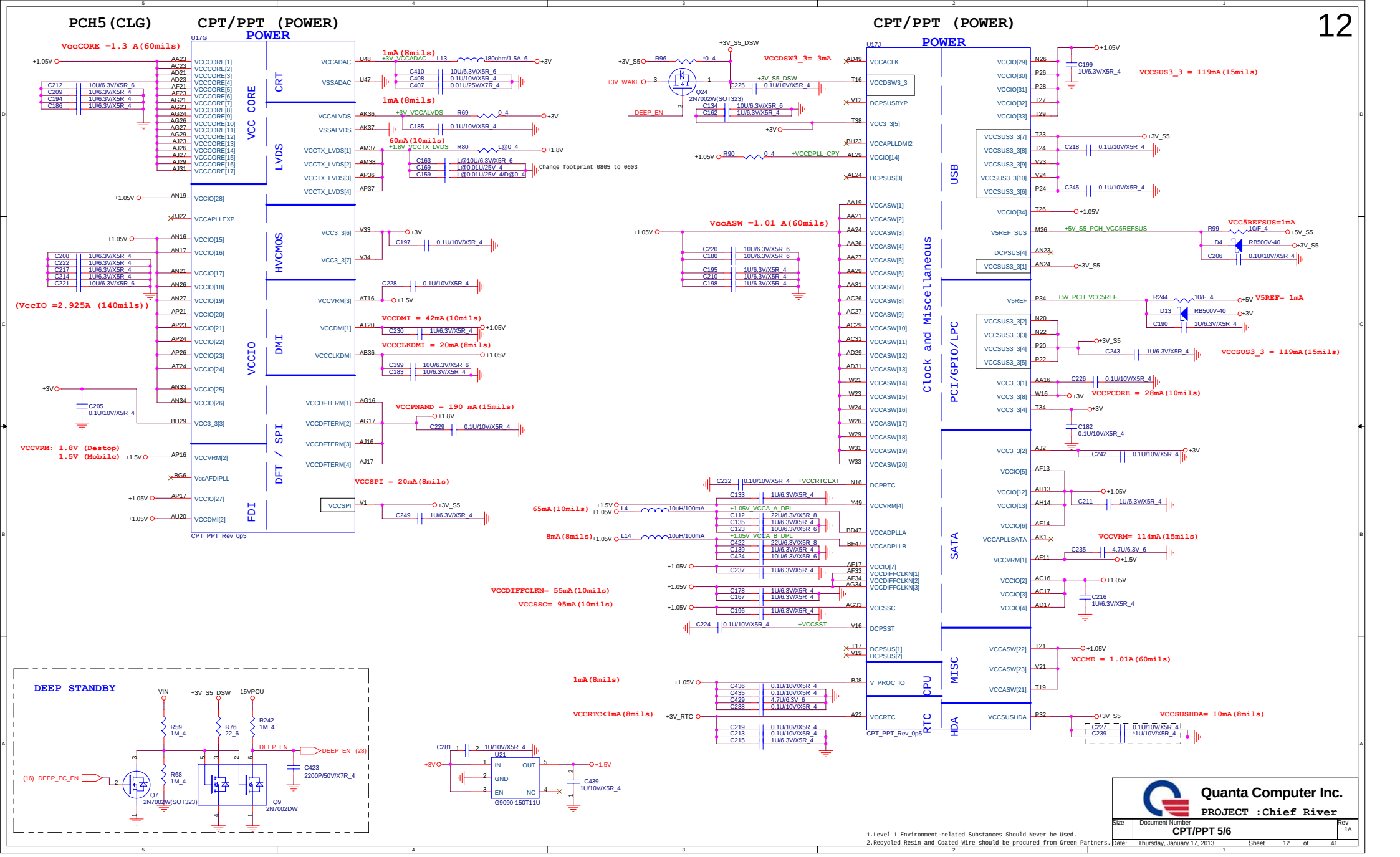

1.Level 1 Environment-related Substances Should Never be Used.
2.Recycled Resin and Coated Wire should be procured from Green Partners.

Quanta Computer Inc.

PROJECT :Chief River

Size	Document Number	Rev
	CPT/PPT 5/6	1A

Date: Thursday, January 17, 2013 Sheet 12 of 41

CPT/PPT (GND)

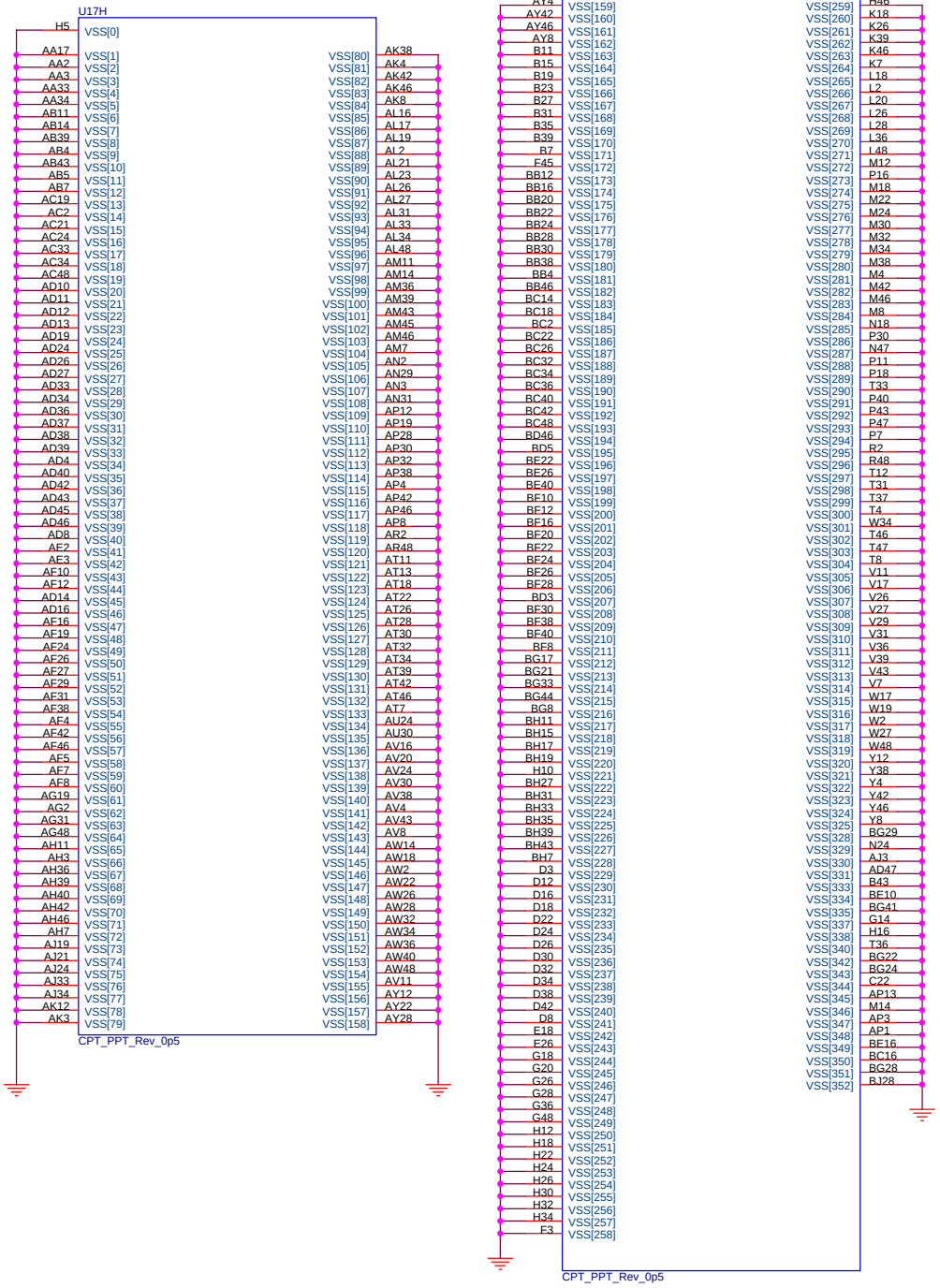

1.Level 1 Environment-related Substances Should Never be Used.
2.Recycled Resin and Coated Wire should be procured from Green Partners.

Quanta Computer Inc.

PROJECT :Chief River

Size	Document Number	Rev
	CPT/PPT 6/6	1A

Date: Thursday, January 17, 2013 Sheet 13 of 41

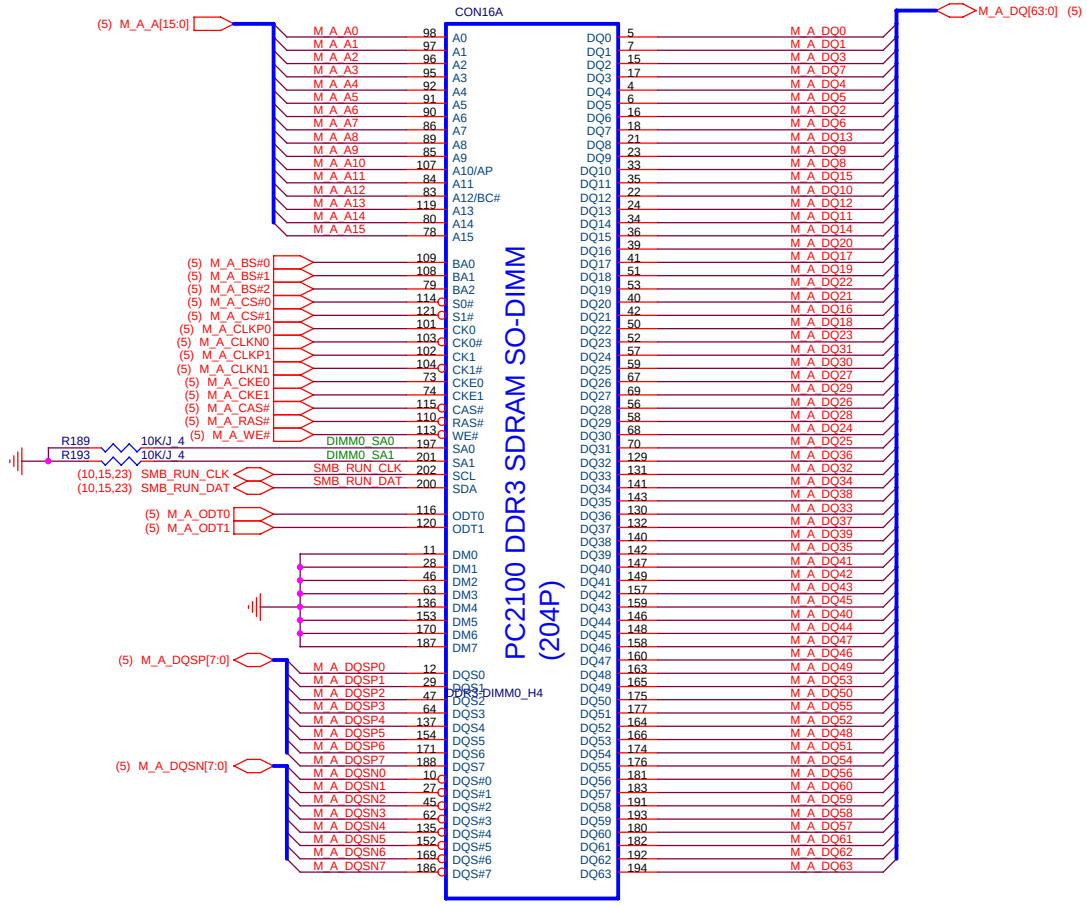

RUV Type

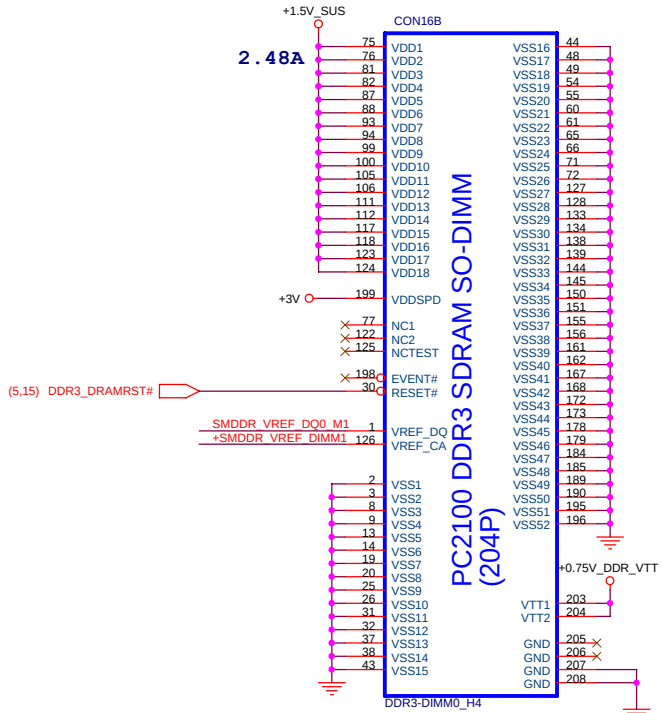

RUV Type

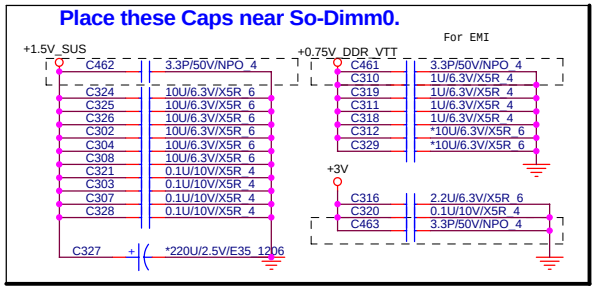

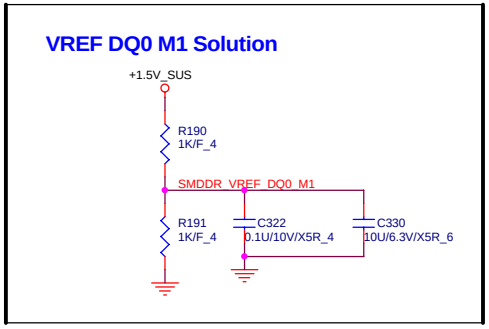

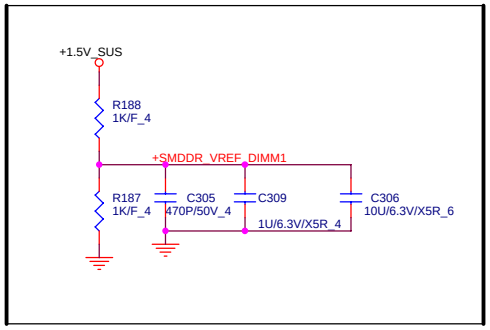

1.Level 1 Environment-related Substances Should Never be Used.
2.Recycled Resin and Coated Wire should be procured from Green Partners.

Quanta Computer Inc.

PROJECT :Chief River

Size	Document Number	Rev
	DDRIII SO-DIMM-0	1A

Date: Thursday, January 17, 2013 Sheet 14 of 41

DDR_RVS (DDR)

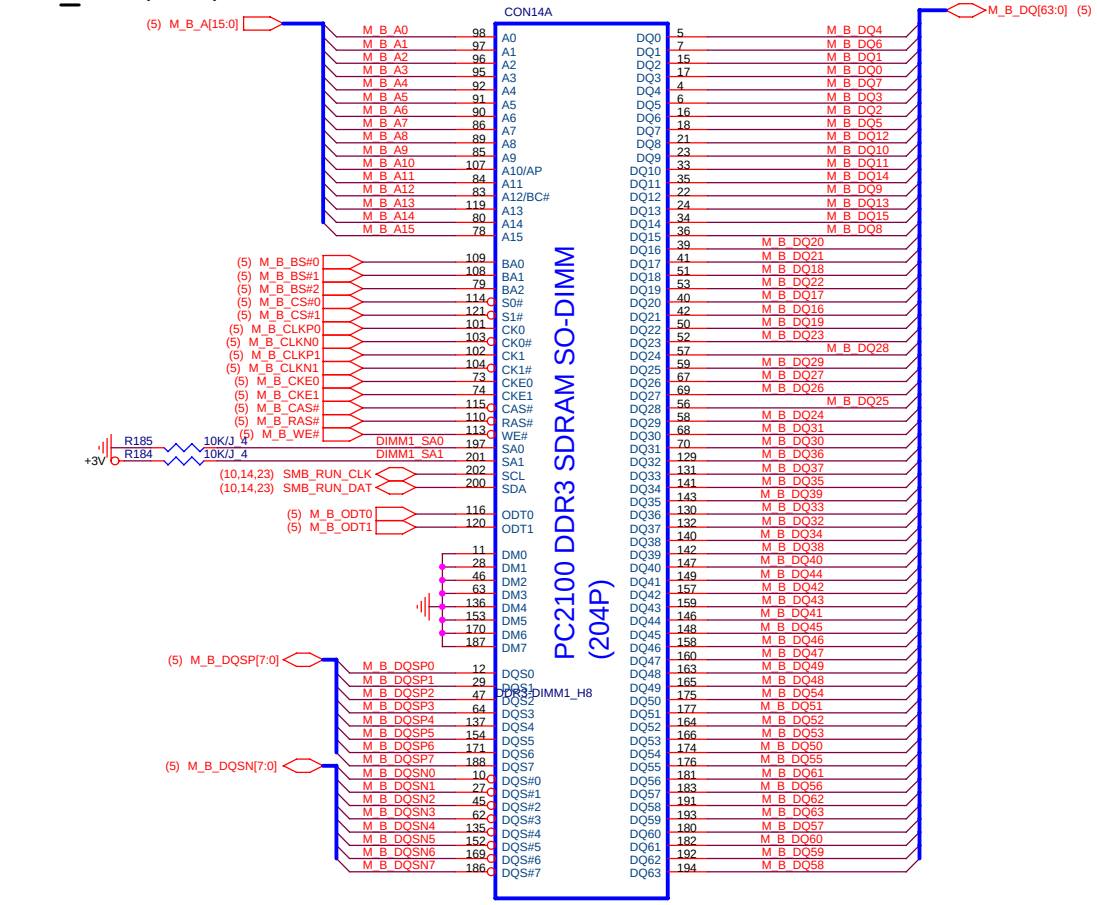

RUV Type

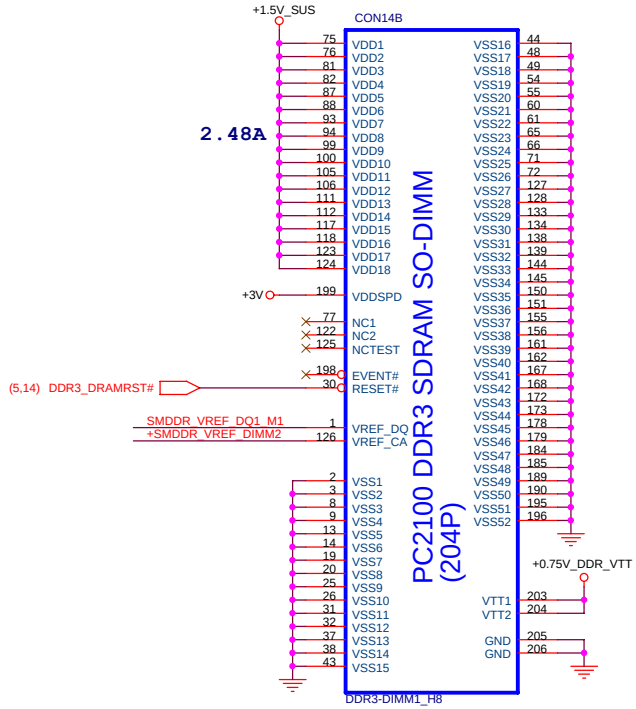

RUV Type

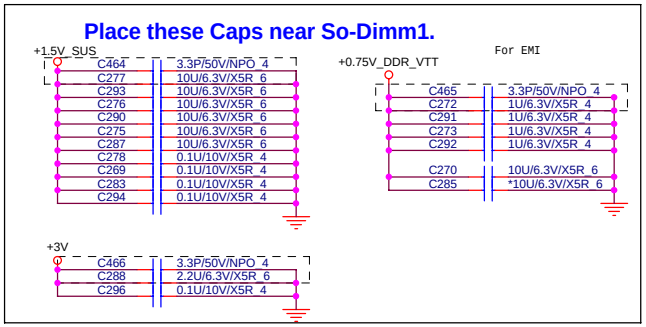

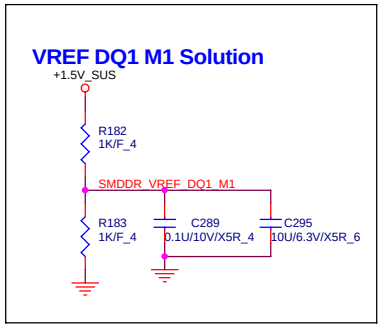

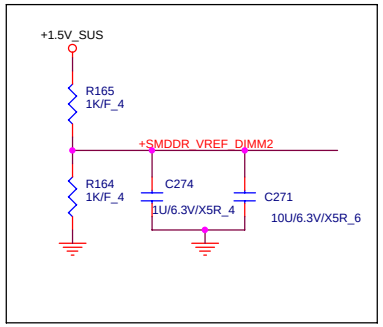

1.Level 1 Environment-related Substances Should Never be Used.
2.Recycled Resin and Coated Wire should be procured from Green Partners.

Quanta Computer Inc.

PROJECT :Chief River

Size	Document Number	Rev
	DDRIII SO-DIMM-1	1A

Date: Thursday, January 17, 2013 Sheet 15 of 41

** Straping Pin,Can not pull low.
Note the input leakage current to the strap pins must be less than 10uA.

Since ECSCI is OD, no need for a back-drive protection diode on this signal. But note there is internal PU in chipset at default

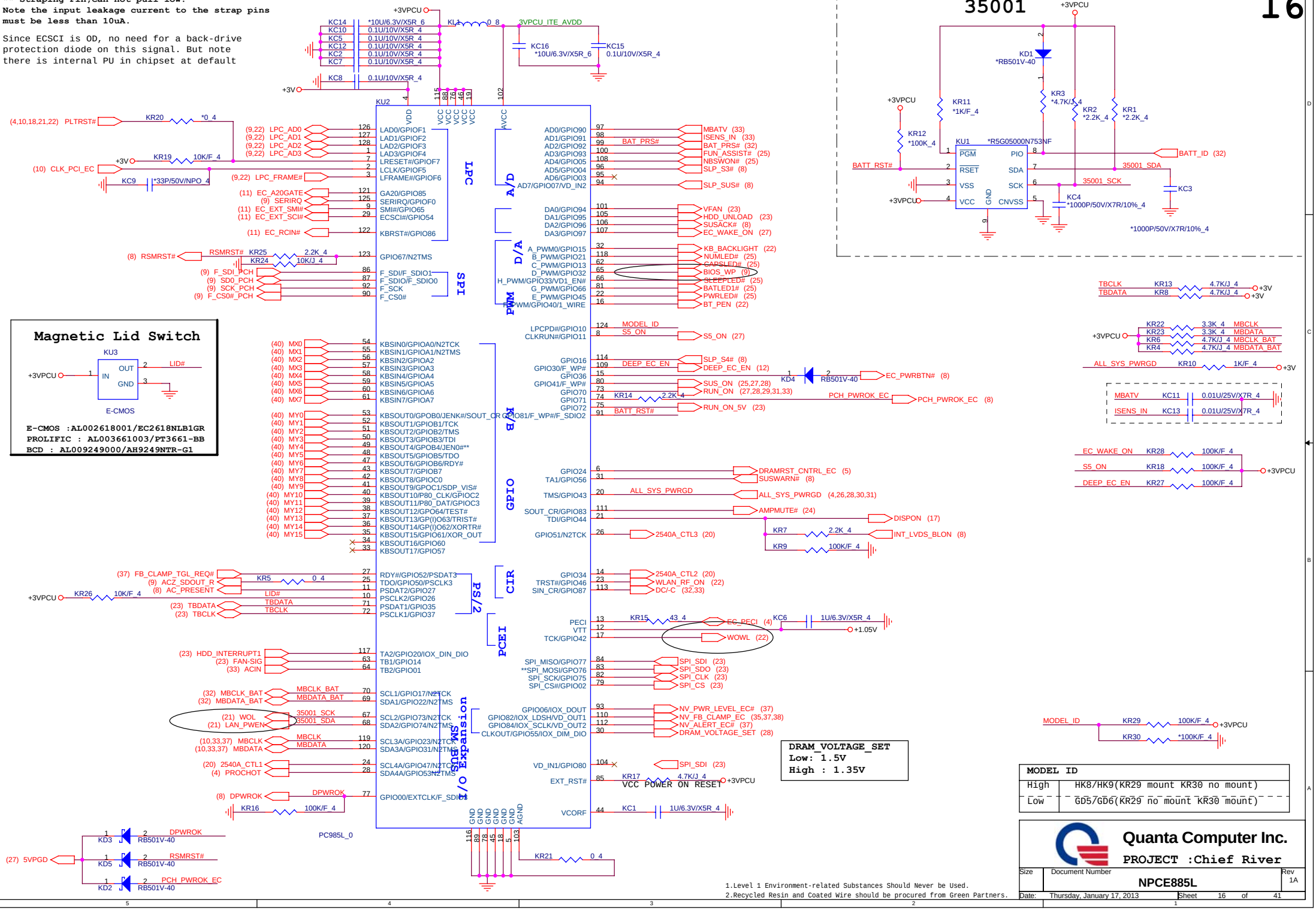

Quanta Computer Inc.
PROJECT :Chief River
Size | Document Number: NPCE885L | Rev 1A
Date: Thursday, January 17, 2013 | Sheet 16 of 41

Touch Screen

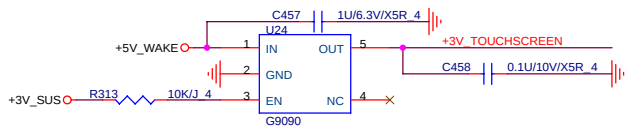

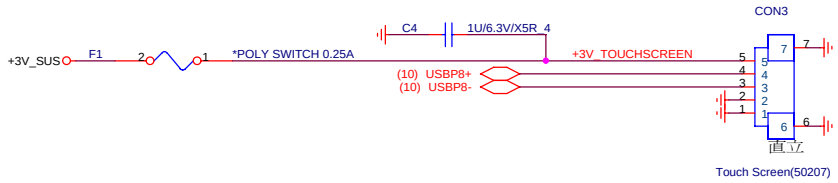

NFC module :
Vender : Samsung SNC-i20
Power consumption : Max. 160mW/48mA
Power Ripple +/- 50mV

LVDS

FAST,UL/CSA

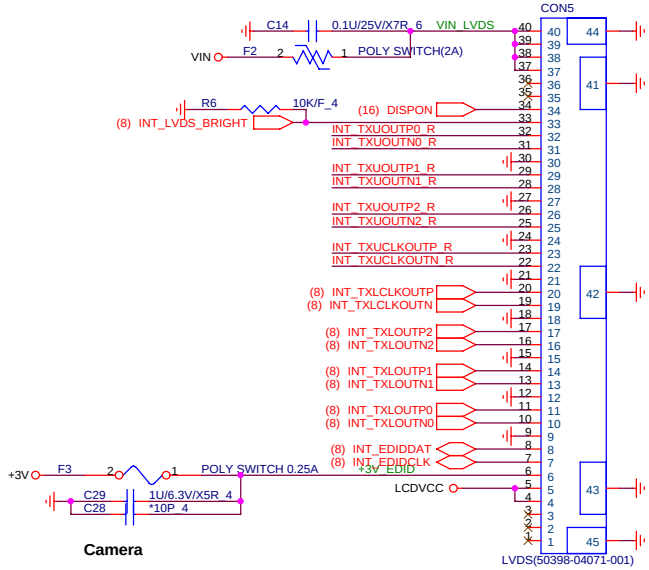

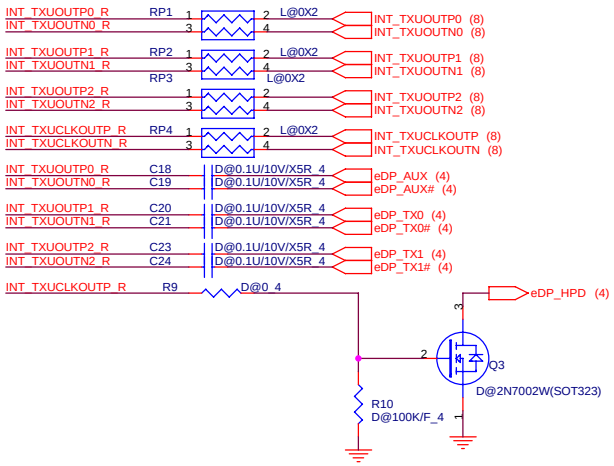

Camera HD specification
Voltage: Max. 3.6V
Current : Max. 200mA
OCP: 200mA ~ 300mA

NB LVDS enable

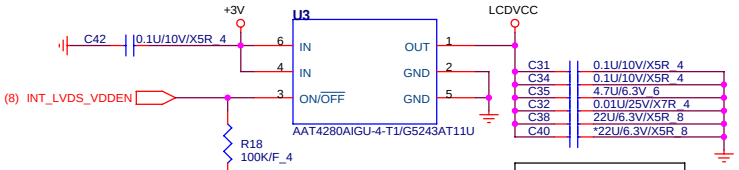

AU LCDVCC:
I rush = 2A/0.5ms
IDD = 0.3A

NFC

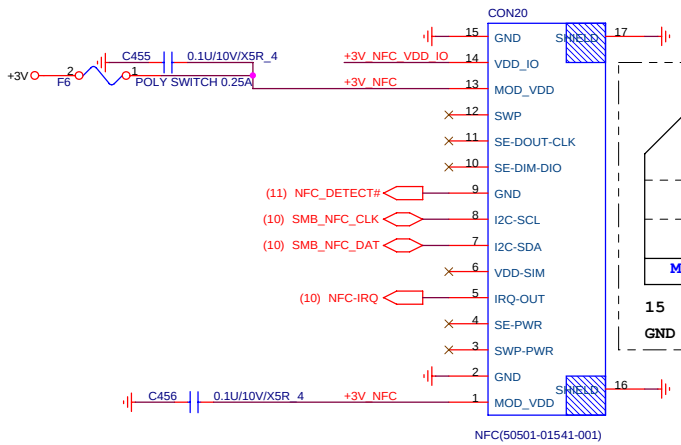

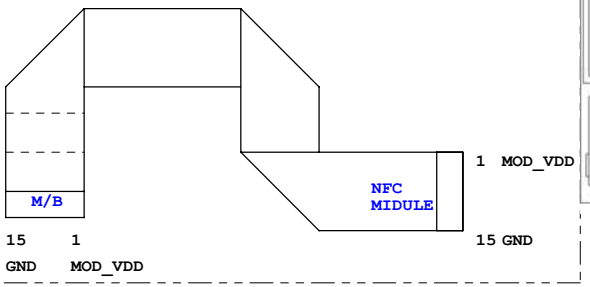

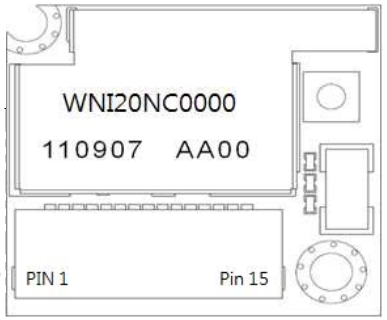

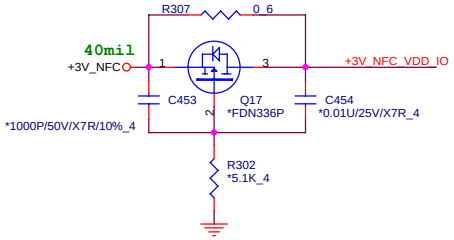

1.Level 1 Environment-related Substances Should Never be Used.
2.Recycled Resin and Coated Wire should be procured from Green Partners.

Quanta Computer Inc.
PROJECT :Chief River

Size	Document Number	Rev
	CRT/LVDS	1A

Date: Thursday, January 17, 2013 Sheet 17 of 41

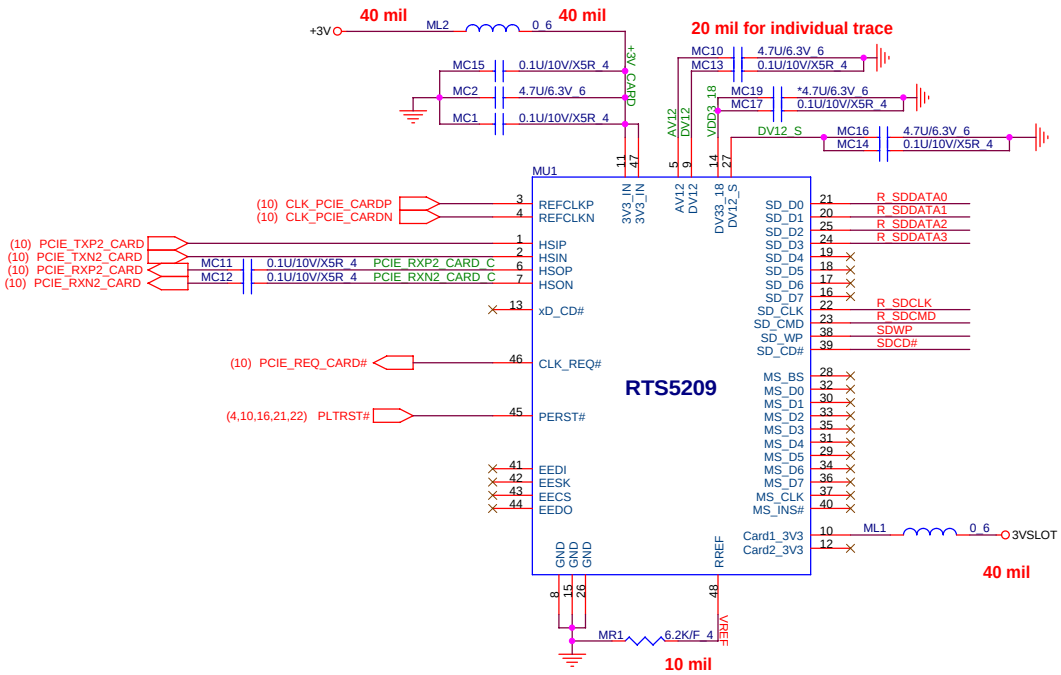

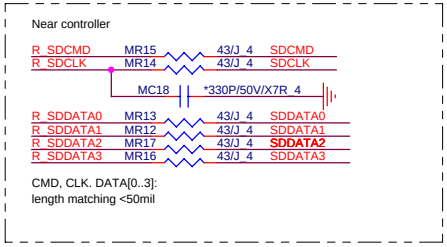

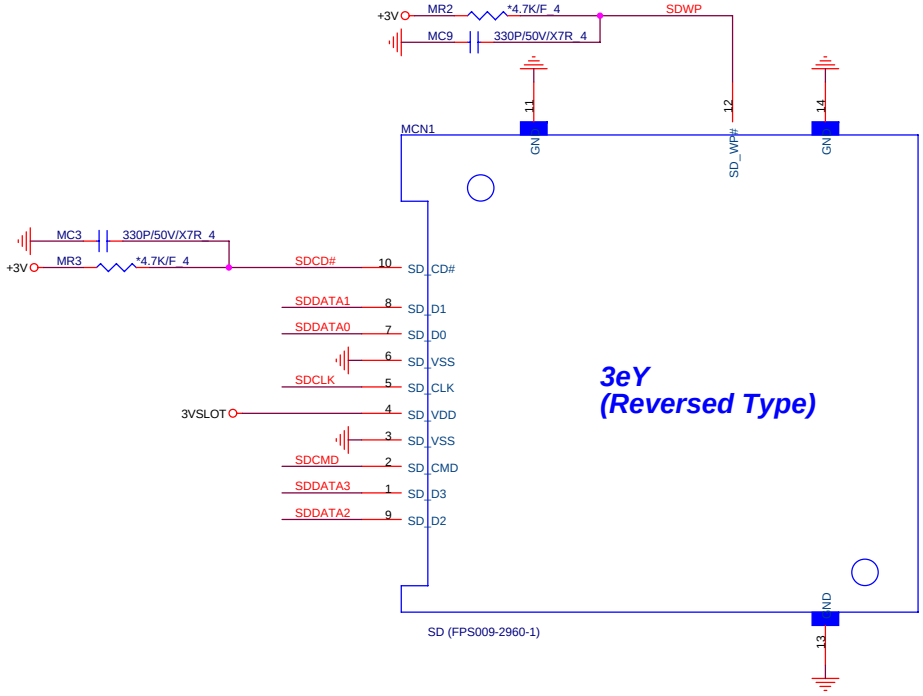

These component need to close to Slot

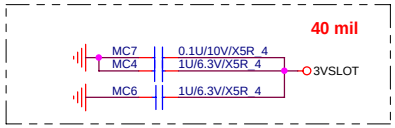

1.Level 1 Environment-related Substances Should Never be Used.
2.Recycled Resin and Coated Wire should be procured from Green Partners.

Quanta Computer Inc.

PROJECT :Chief River

Size	Document Number	Rev
	CARD	1A

Date: Thursday, January 17, 2013 Sheet 18 of 41

HDMI

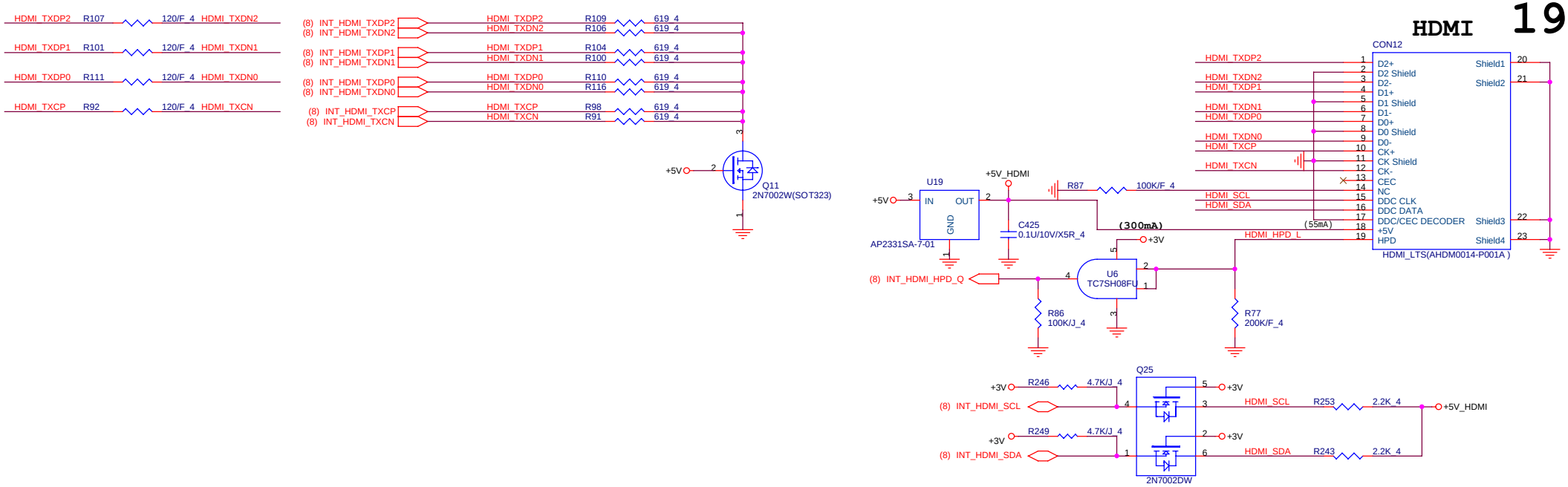

H/W Thermal Protect

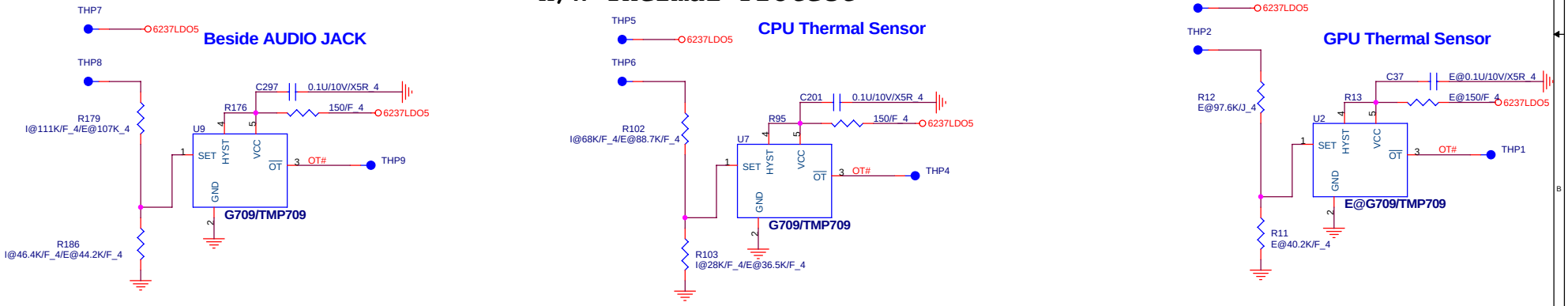

RSET(kΩ)= 0.0012T2 – 0.9308T + 96.147

95	18.5K
100	15K
107	10.3K
110	8.2K

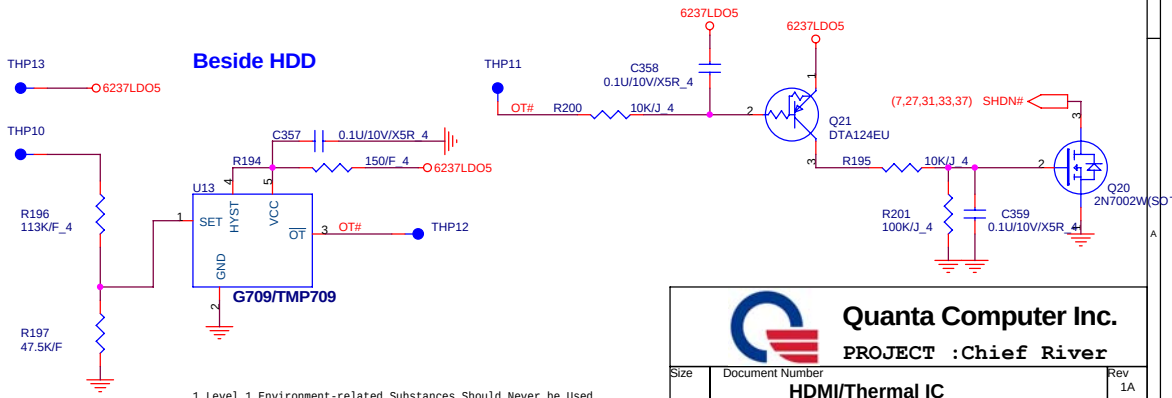

DIS SKU

Location of IC	Temp	R-Set	Parts in BOM	Max	Min
Near CPU sensor temp	70	R208=36.87K	36.5K	71	70
Near GFX sensor temp	65	R146=40.72K	40.2K	66.3	65.1
Near AUDIO sensor temp	60	R345=44.62K	44.2K	61.2	60

UMA SKU

Location of IC	Temp	R-Set	Parts in BOM	Max	Min
Near CPU sensor temp	81	R208=28.63K	28K	82.3	81.4
Near AUDIO sensor temp	58	R345=46.2K	46.4K	58.4	57.1

1.Level 1 Environment-related Substances Should Never be Used.
2.Recycled Resin and Coated Wire should be procured from Green Partners.

Quanta Computer Inc.
PROJECT :Chief River

Size	Document Number	Rev
	HDMI/Thermal IC	1A

Date: Thursday, January 17, 2013 Sheet 19 of 41

MB to USB board

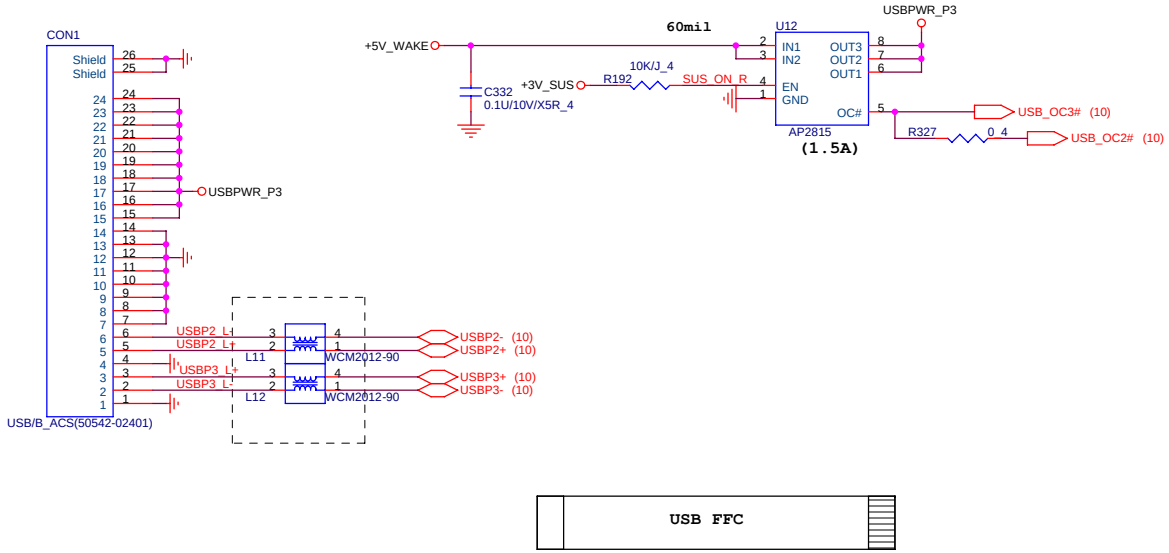

USB FFC

USB 3.0 PORT1

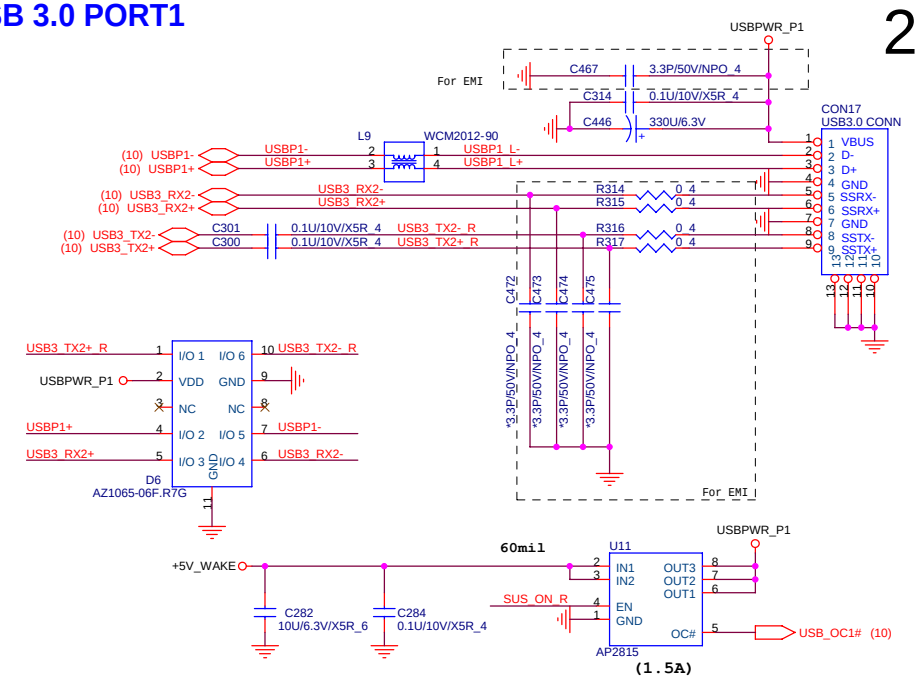

USB Charger

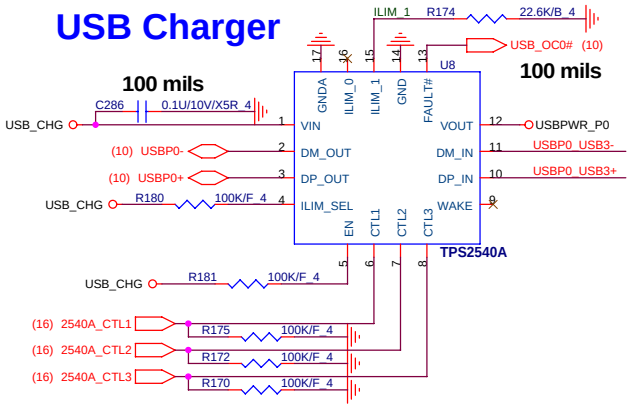

USB 3.0 PORT0

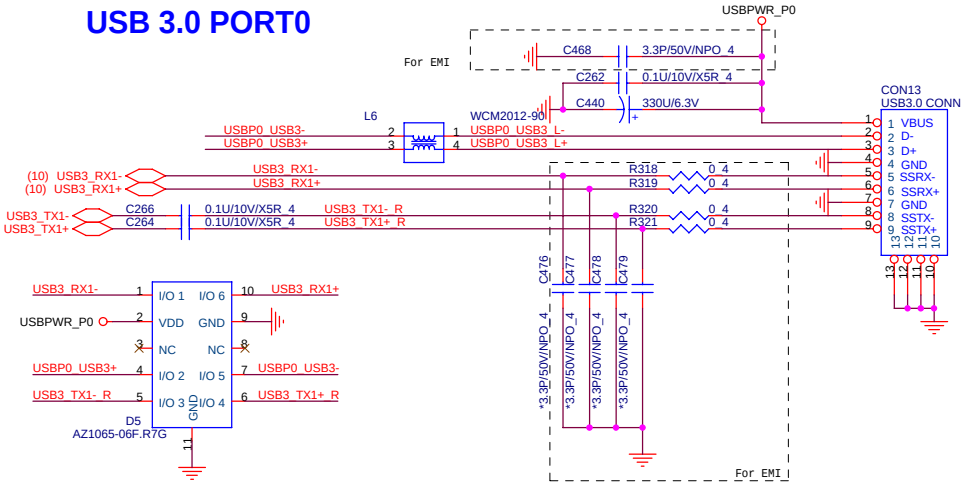

SDP : Standard Downstream Port
CDP : Charging downstream port
DCP : Dedicated Charging Port
Enable/Disable : setting by BIOS

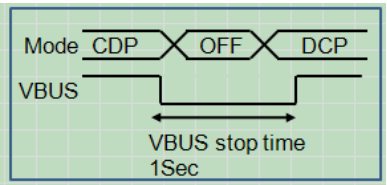

CTL_1	CTL_2	CTL_3	TPS 2540A/2543 Truth Table
0	0	0	OUT discharge, power switch OFF
0	X	1	DCP,Auto-detect(S3/S4/S5, 1.5A)
X	1	0	SDP, USB2.0 mode(S0, 0.5A)
1	0	0	DCP, BC SPEC1.2 only(S3/Deep standby/S4/S5, 1.5A)
1	0	1	DCP, Divider mode only(S3/S4/S5, 1.5A)
1	1	1	CDP (S0, 1.5A)

System State	USB Battery Charging Setting			
	Disable	C(1 2 3)	Enable	C(1 2 3)
S0	SDP	(X 1 0)	CDP	(1 1 1)
S3	SDP	(X 1 0)	DCP BC	(1 0 0)
DS3	Charger OFF	(0 0 0)	DCP BC	(1 0 0)
S4	Charger OFF	(0 0 0)	DCP BC	(1 0 0)
S5	Charger OFF	(0 0 0)	DCP BC	(1 0 0)

ILIM_SEL	(I LIMIT(A)= 48000/R)	
HI	I_LIM_1	
LO	I_LIM_0	48000/22.6K=2.123A

1.Level 1 Environment-related substances should Never be used.
2.Recycled Resin and Coated Wire should be procured from Green Partners.

Quanta Computer Inc.
PROJECT :Chief River

Size	Document Number	Rev
	USB/USB Charger	1A

Date: Thursday, January 17, 2013 Sheet 20 of 41

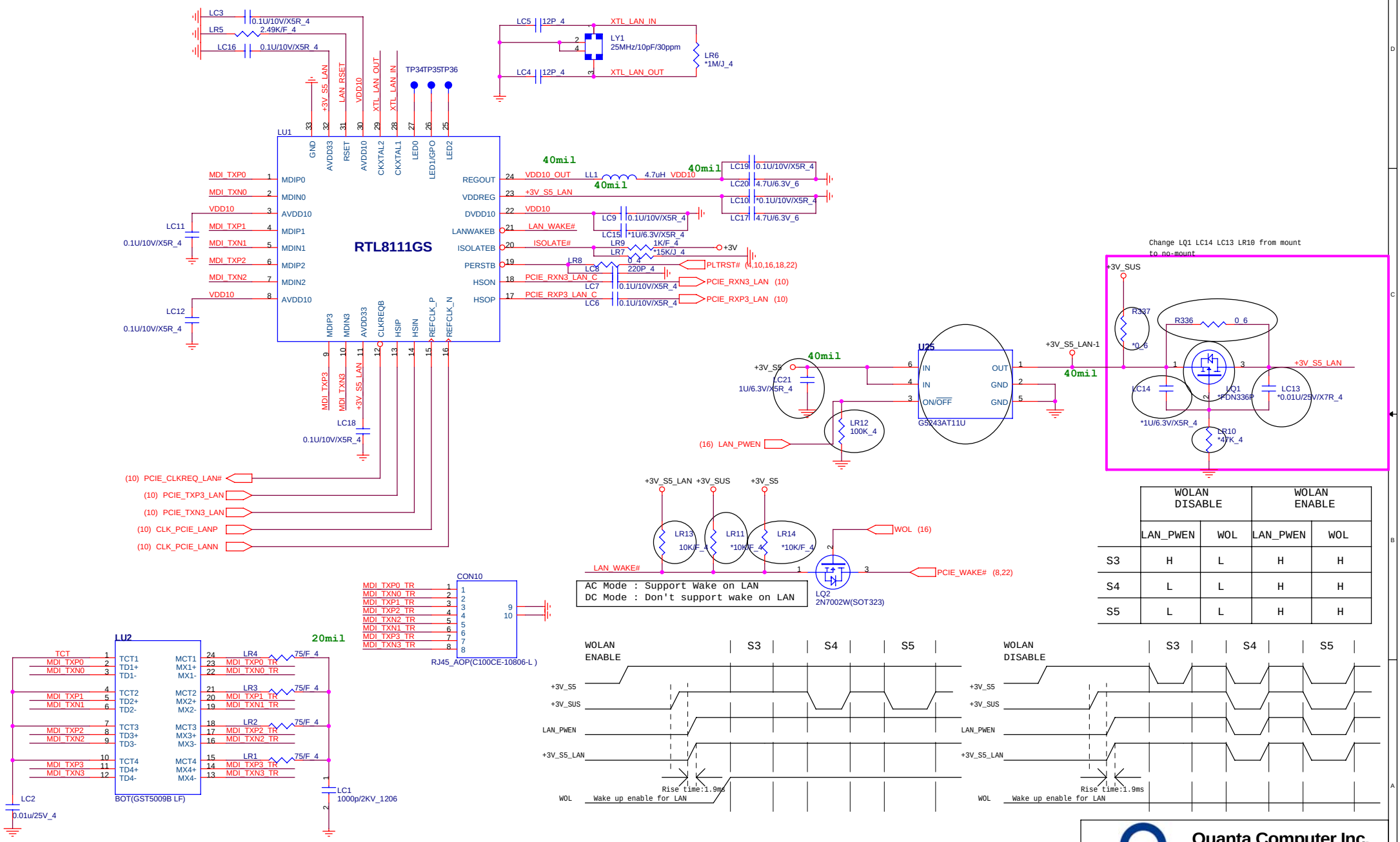

	WOLAN DISABLE		WOLAN ENABLE	
	LAN_PWEN	WOL	LAN_PWEN	WOL
S3	H	L	H	H
S4	L	L	H	H
S5	L	L	H	H

1.Level 1 Environment-related Substances Should Never be Used.
2.Recycled Resin and Coated Wire should be procured from Green Partners.

Quanta Computer Inc.

PROJECT : Chief River

Size	Document Number	Rev
	Giga LAN RTL8111GS	1A

Date: Thursday, January 17, 2013 Sheet 21 of 41

WLAN/WIMAX/WIDI

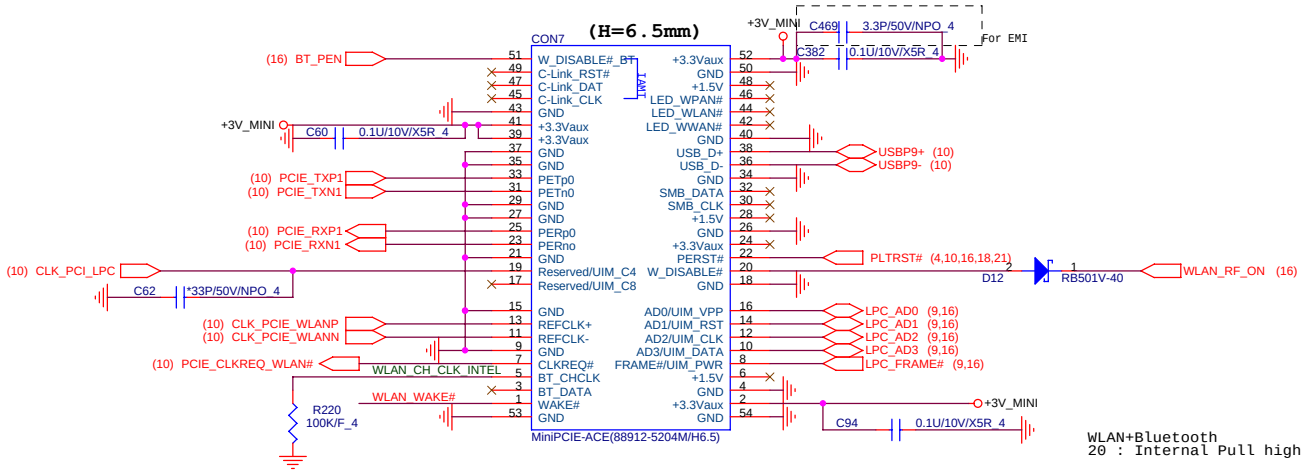

WLAN+Bluetooth
20 : Internal Pull high 25K ~ 58K

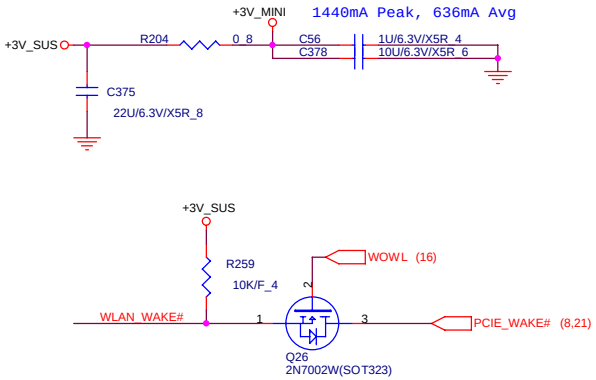

AC Mode : Support Wake on WLAN
DC Mode : Don't support wake on WLAN

KB BACKLIGHT

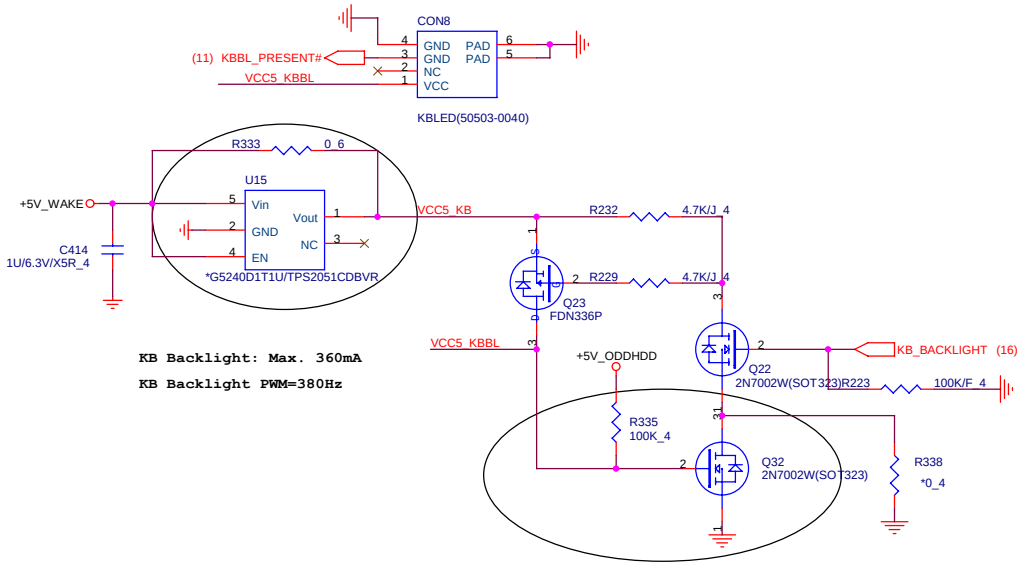

KB Backlight: Max. 360mA

KB Backlight PWM=380Hz

1.Level 1 Environment-related Substances Should Never be Used.
2.Recycled Resin and Coated Wire should be procured from Green Partners.

Quanta Computer Inc.

PROJECT :Chief River

Size	Document Number	Rev
	WLAN/KB BL	1A

Date: Thursday, January 17, 2013 Sheet 22 of 41

ODD CONNECTOR

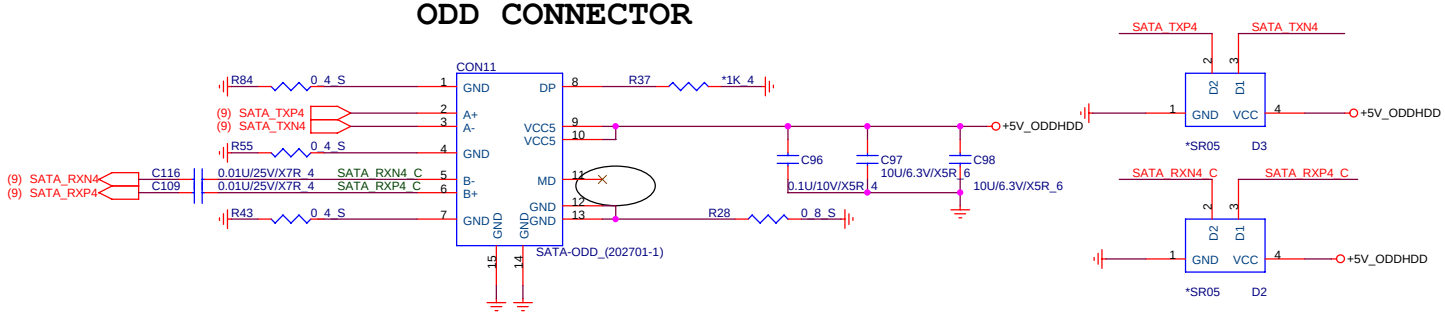

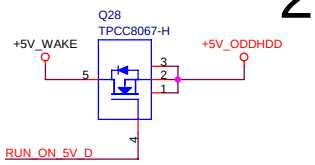

HDD CONNECTOR

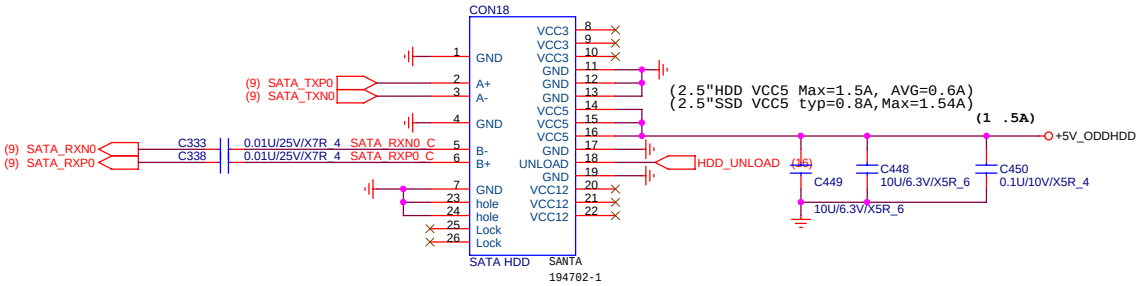

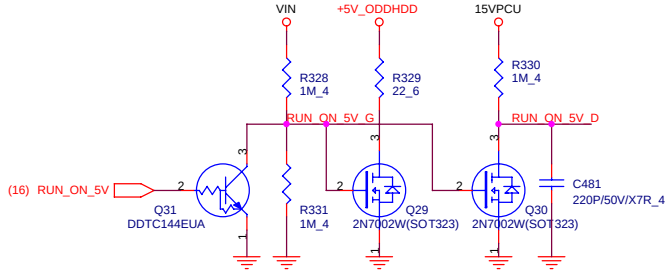

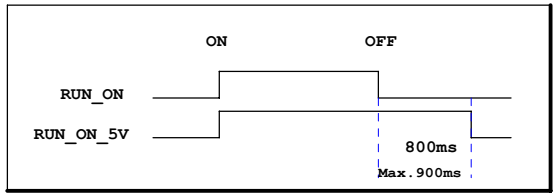

HDD PROTECT SPI INTERFACE

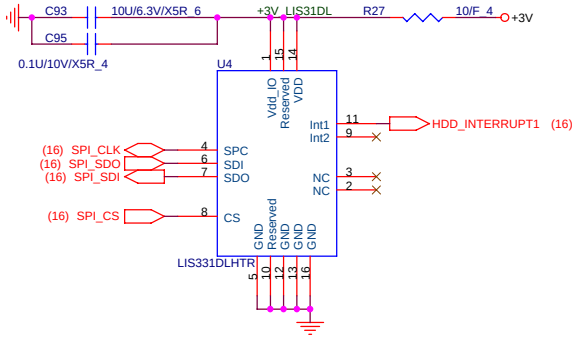

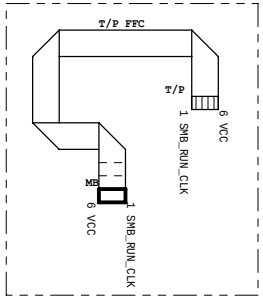

T/P Board to T/P

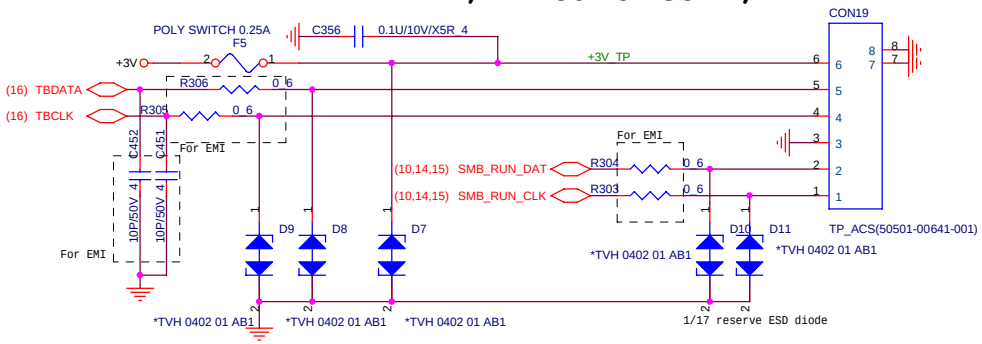

FAN

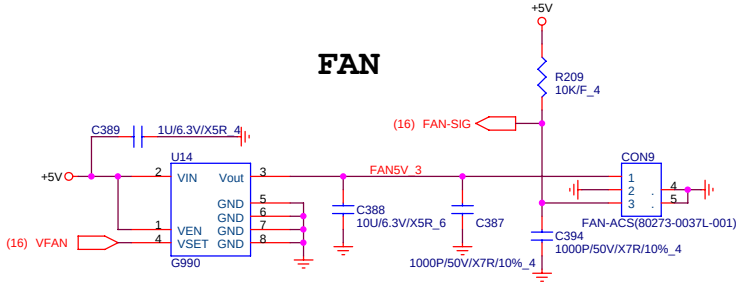

1.Level 1 Environment-related Substances Should Never be Used.
2.Recycled Resin and Coated Wire should be procured from Green Partners.

Quanta Computer Inc.
PROJECT :Chief River

Size	Document Number	Rev
	HDD/ODD/TP/FAN	1A

Date: Thursday, January 17, 2013 Sheet 23 of 41

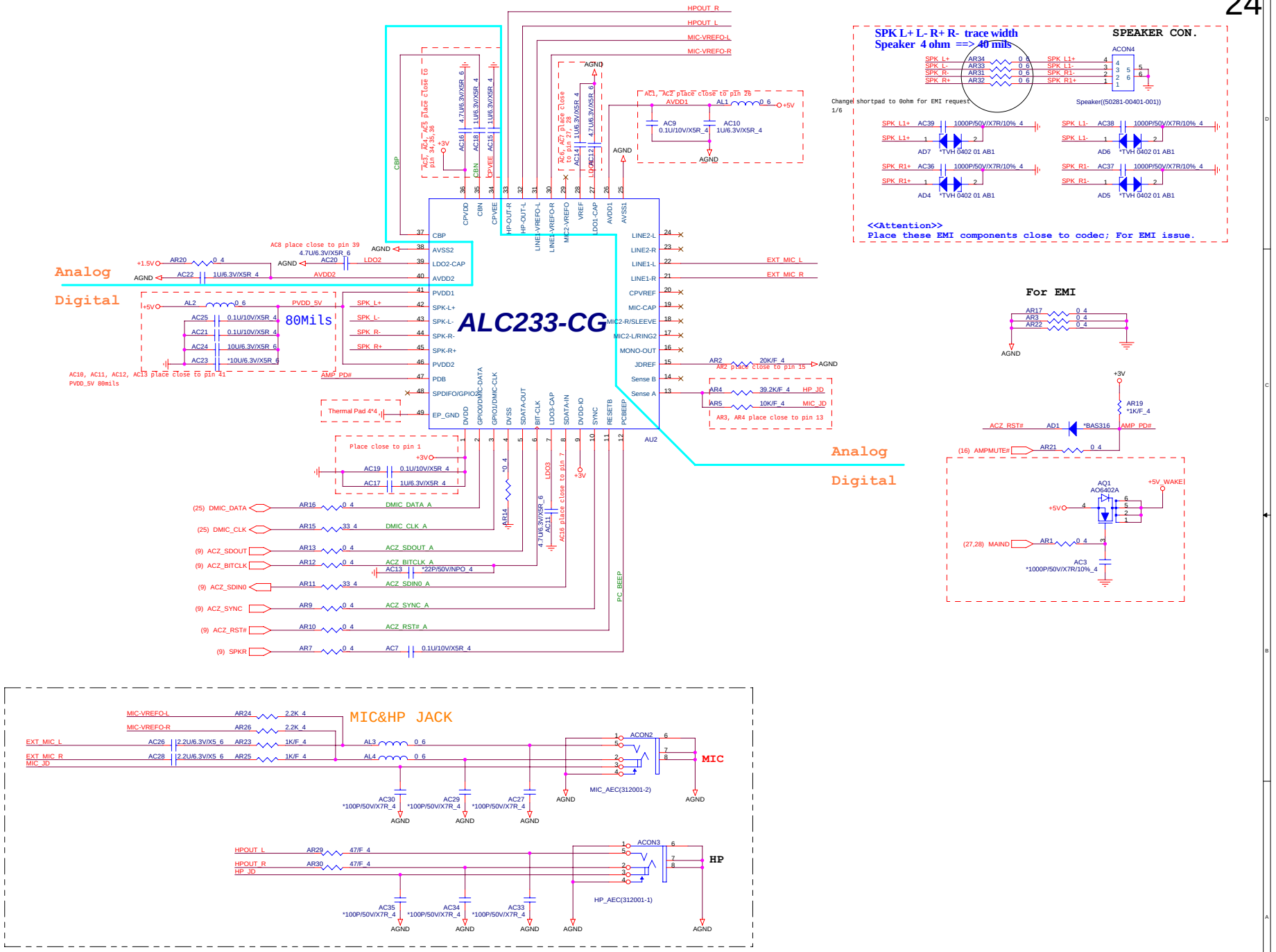

1.Level 1 Environment-related Substances Should Never be Used.
2.Recycled Resin and Coated Wire should be procured from Green Partners.

Quanta Computer Inc.

PROJECT : Chief River

Size	Document Number	Rev
	Audio Codec ALC233-CG	1A

Date: Thursday, January 17, 2013 Sheet 24 of 41

Camera

USB Camera Power

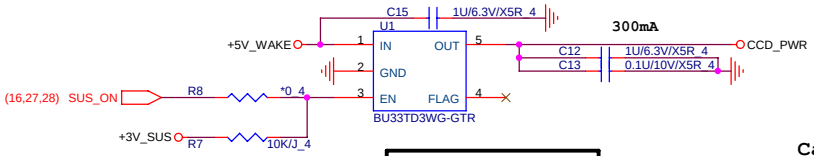

Camera HD specification
Voltage: Max. 3.6V
Current : Max. 200mA
OCP: 200mA ~ 300mA

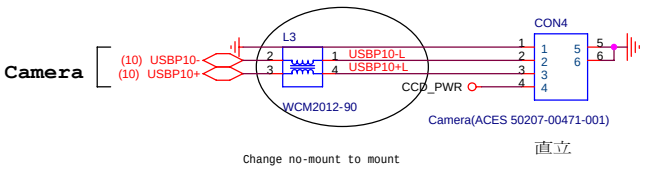

SATA LED

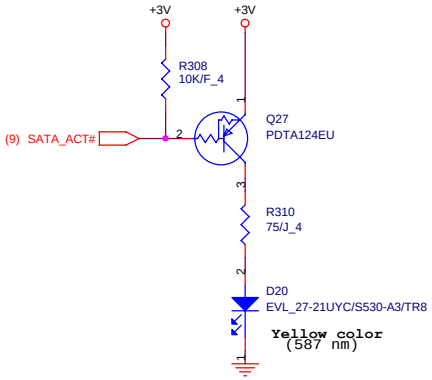

BATTERY LED

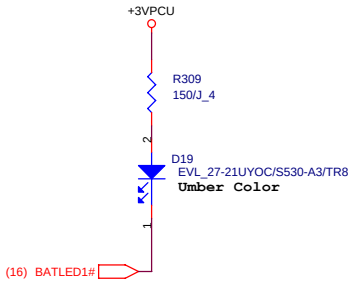

Power/Sleep LED

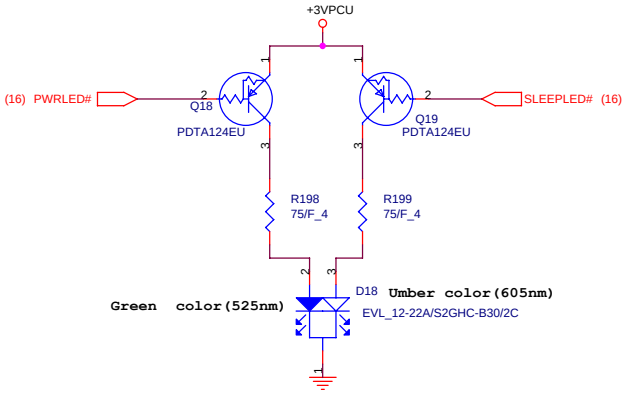

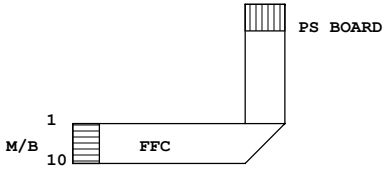

Power SW Board Connector

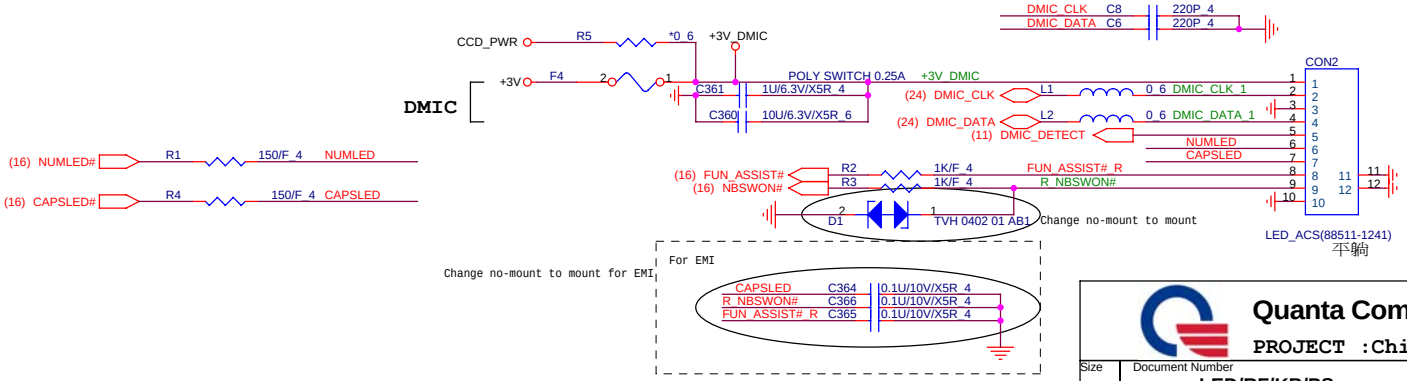

1.Level 1 Environment-related Substances Should Never be Used.
2.Recycled Resin and Coated Wire should be procured from Green Partners.

Quanta Computer Inc.

PROJECT :Chief River

Size	Document Number	Rev
	LED/RF/KB/PS	1A

Date: Thursday, January 17, 2013 Sheet 25 of 41

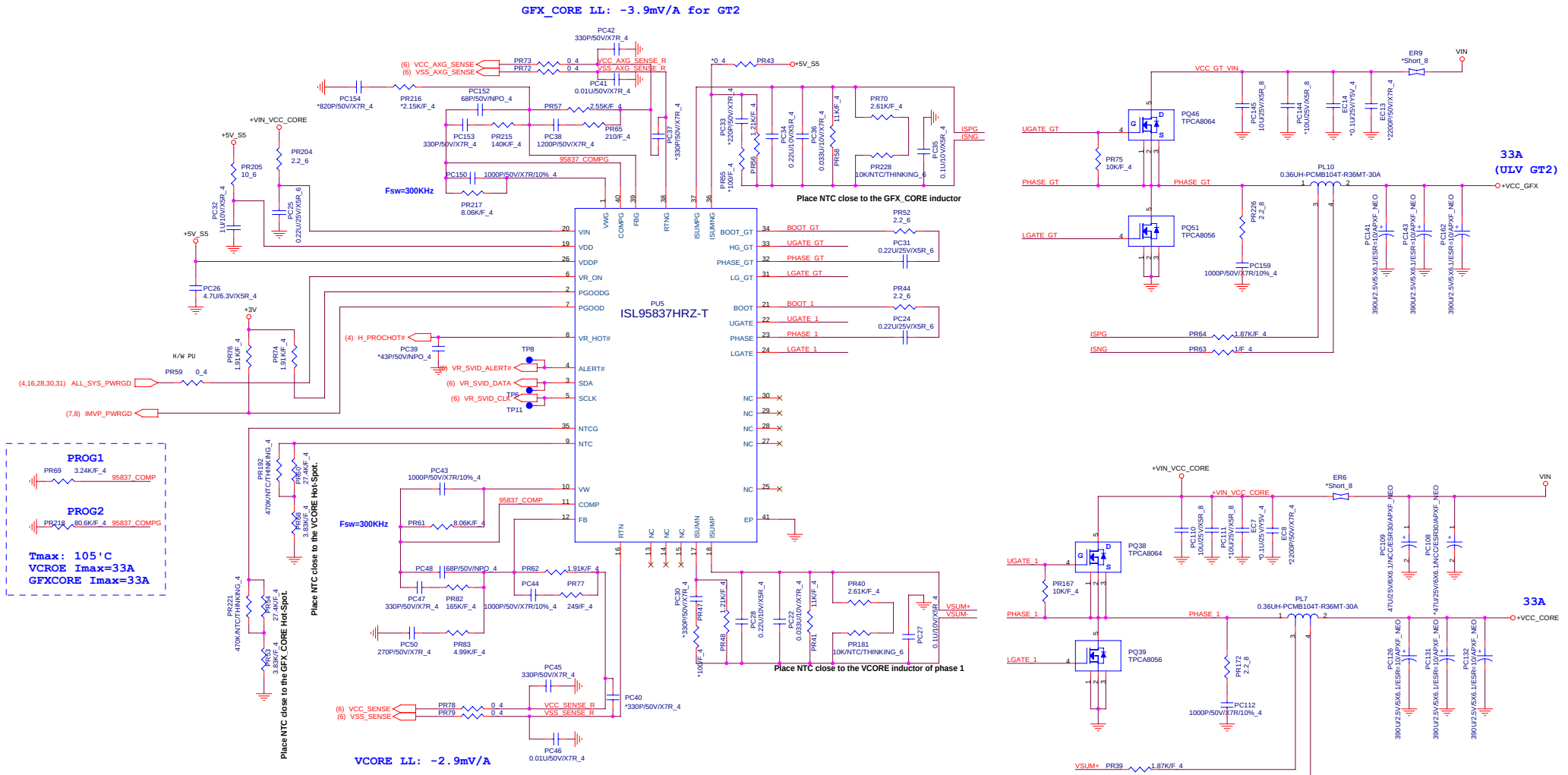

1.Level 1 Environment-related Substances Should Never be Used.
2.Recycled Resin and Coated Wire should be procured from Green Partners.

Quanta Computer Inc.

PROJECT : XXX

Size	Document Number	Rev
	+VCC_CORE (ISL95837)	1A

Date: Thursday, January 17, 2013 Sheet 26 of 41

3.3V & 5V

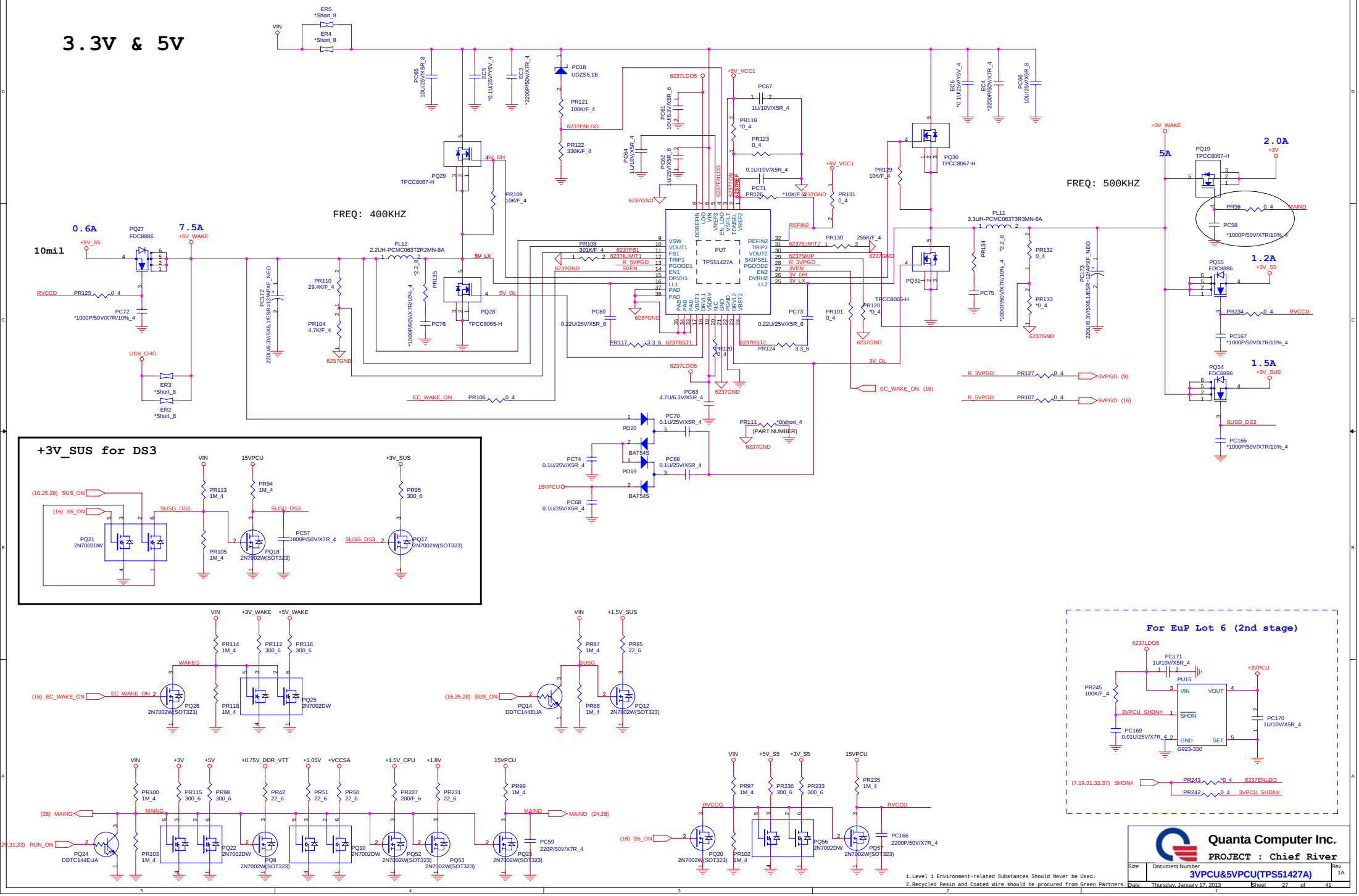
FREQ: 400KHZ
FREQ: 500KHZ
0.6A
7.5A
2.0A
1.2A
1.5A
5A
10mil
PU7
TPS51427A
+3V_SUS for DS3
For EuP Lot 6 (2nd stage)
Quanta Computer Inc.
PROJECT : Chief River
3VPCU&5VPCU(TPS51427A)
Rev 1A
Size
Document Number
Date: Thursday, January 17, 2013
Sheet 27 of 41
1.Level 1 Environment-related Substances Should Never be Used.
2.Recycled Resin and Coated Wire should be procured from Green Partners.

1.5VSUS & VTT_MEM

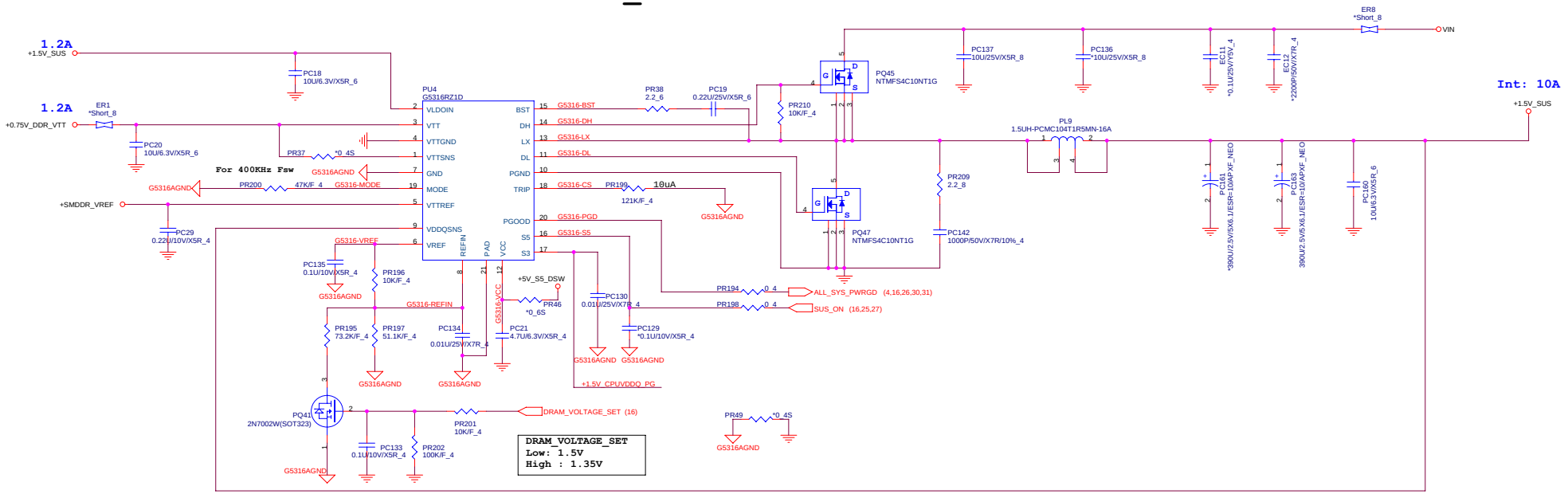

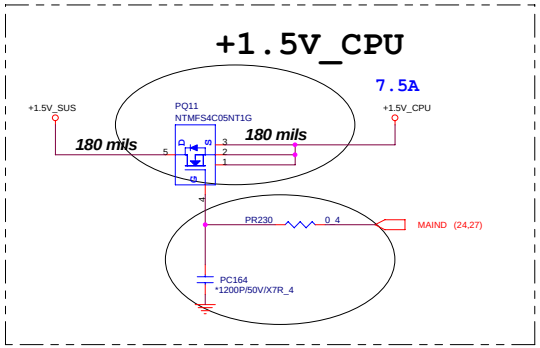

MODE	Resistor on Mode	Fsw	Discharge Mode
3	200Kohm	400KHz	Tracking discharge
2	100Kohm	300KHz	
1	68Kohm	300KHz	Non-tracking discharge
0	47Kohm	400KHz	

STATE	S3	S5	1.5VSUS	VTTREF	VTT
S0	1	1	On	On	On
S3	0	1	On	On	Off/High Z
S4/S5	0	0	Off	Off	Off

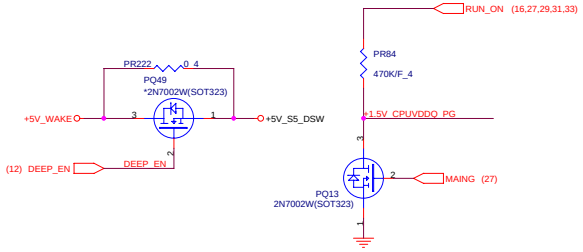

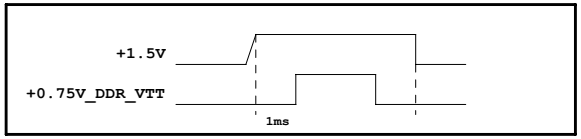

1.Level 1 Environment-related Substances Should Never be Used.
2.Recycled Resin and Coated Wire should be procured from Green Partners.

Quanta Computer Inc.
PROJECT : Chief River

Size	Document Number	Rev
	1.5VSUS/VTT_MEM	1A

Date: Thursday, January 17, 2013 Sheet 28 of 41

+1.05V / 15.0A

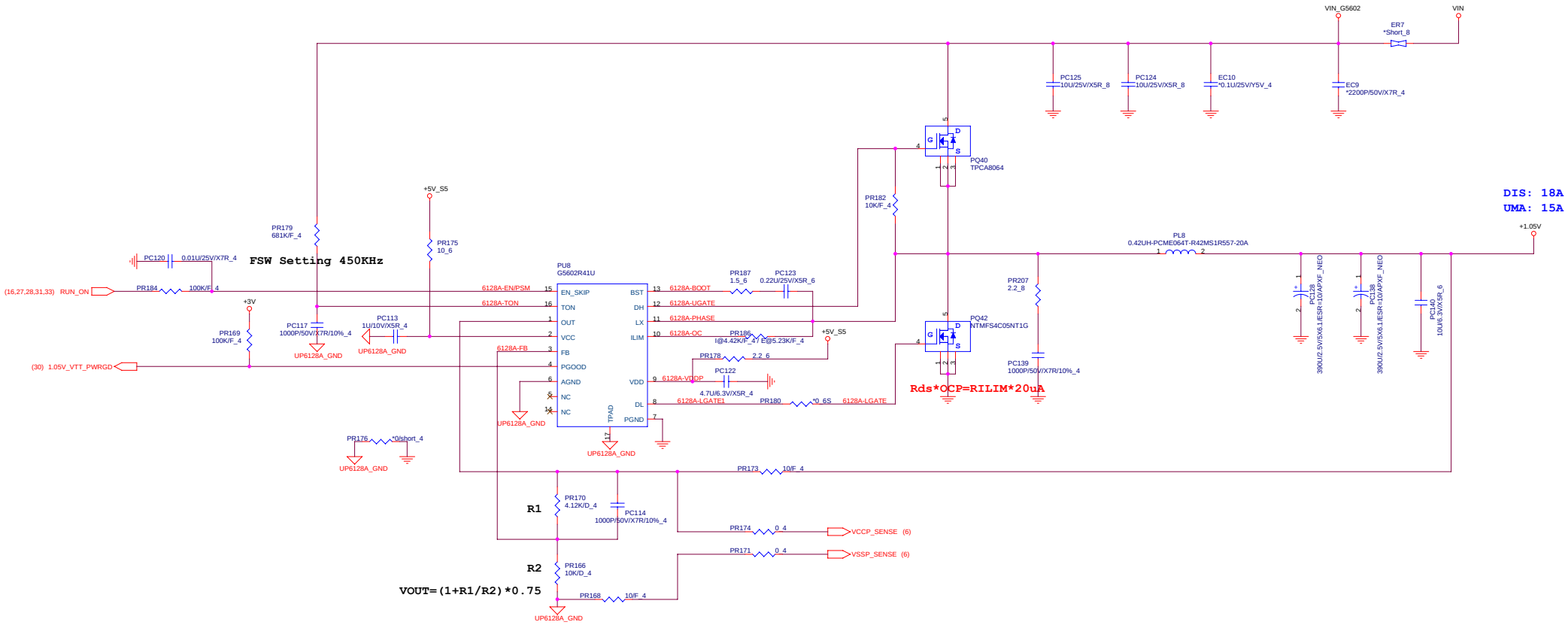

1.Level 1 Environment-related Substances Should Never be Used.
2.Recycled Resin and Coated Wire should be procured from Green Partners.

Quanta Computer Inc.

PROJECT : Chief River

Size	Document Number	Rev
	+1.05V (UP1522RQDD)-15A	1A

Date: Thursday, January 17, 2013 Sheet 29 of 41

+VCCSA

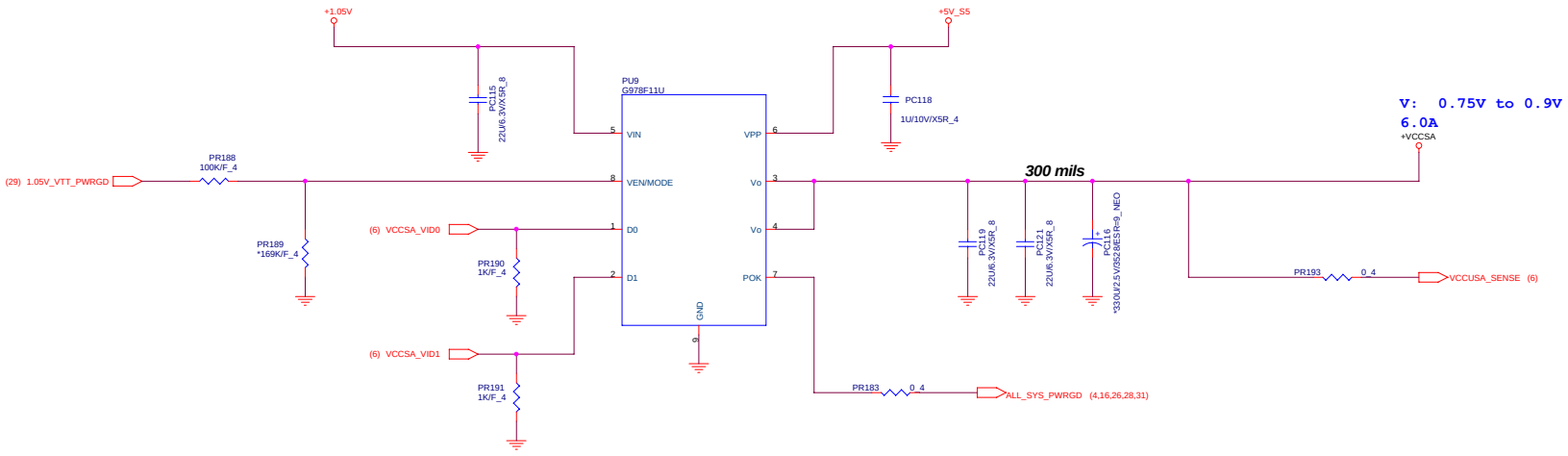

For Chief River ULV

VCCSA_VID0	VCCSA_VID1	+VCCSA
0	0	0.9V
0	1	0.85V
1	0	0.775V
1	1	0.75V

1.Level 1 Environment-related Substances Should Never be Used.
2.Recycled Resin and Coated Wire should be procured from Green Partners.

Quanta Computer Inc.

PROJECT : Chief River

Size	Document Number	Rev
	VCCSA / VCCIO	1A

Date: Thursday, January 17, 2013 Sheet 30 of 41

VCC1.8

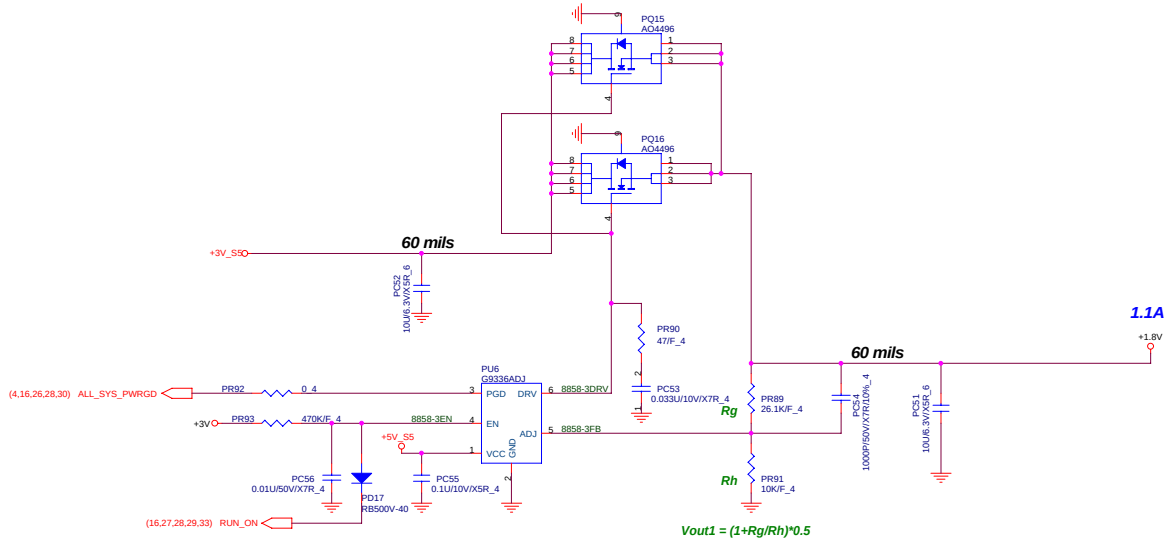

Thermal Protection and Battery UVP for VEDS

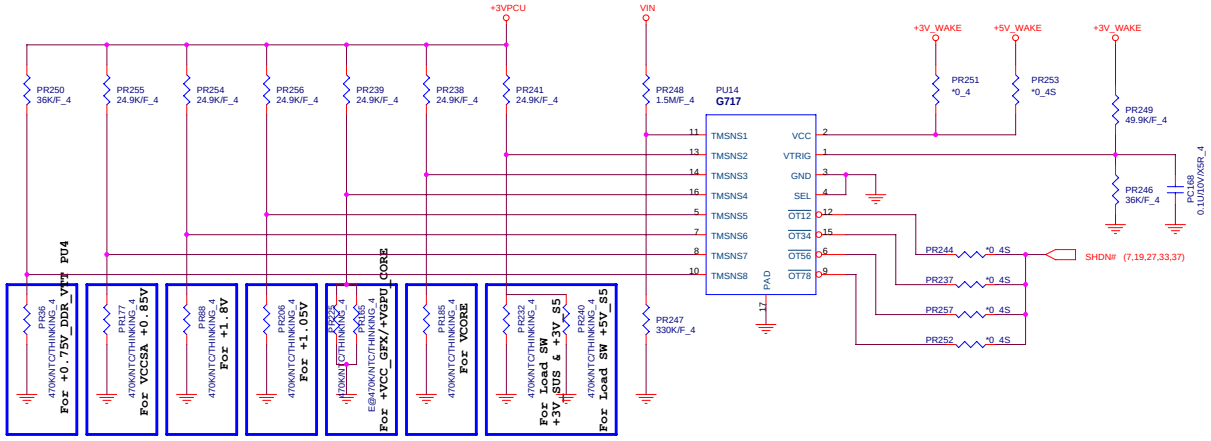

1.Level 1 Environment-related Substances Should Never be Used.
2.Recycled Resin and Coated Wire should be procured from Green Partners.

Quanta Computer Inc.
PROJECT : Chief River

Size	Document Number	Rev
	VCC1.8	1A

Date: Thursday, January 17, 2013 Sheet 31 of 41

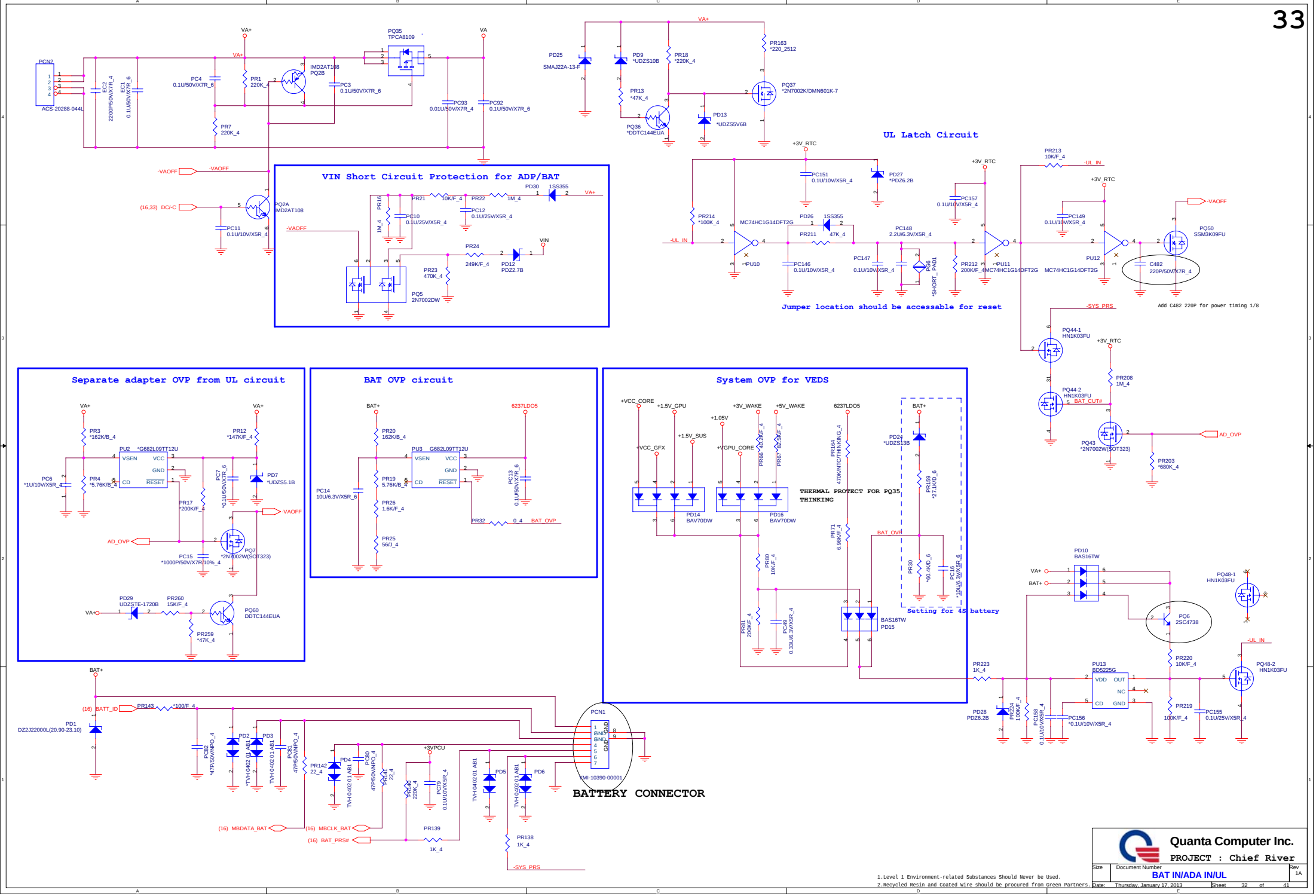
VIN Short Circuit Protection for ADP/BAT
UL Latch Circuit
Jumper location should be accessable for reset
Add C482 220P for power timing 1/8
Separate adapter OVP from UL circuit
BAT OVP circuit
System OVP for VEDS
THERMAL PROTECT FOR PQ35 THINKING
Setting for 4S battery
BATTERY CONNECTOR
1.Level 1 Environment-related Substances Should Never be Used.
2.Recycled Resin and Coated Wire should be procured from Green Partners.
Quanta Computer Inc.
PROJECT : Chief River
Size
Document Number
BAT IN/ADA IN/UL
Rev
1A
Date: Thursday, January 17, 2013
Sheet 32 of 41

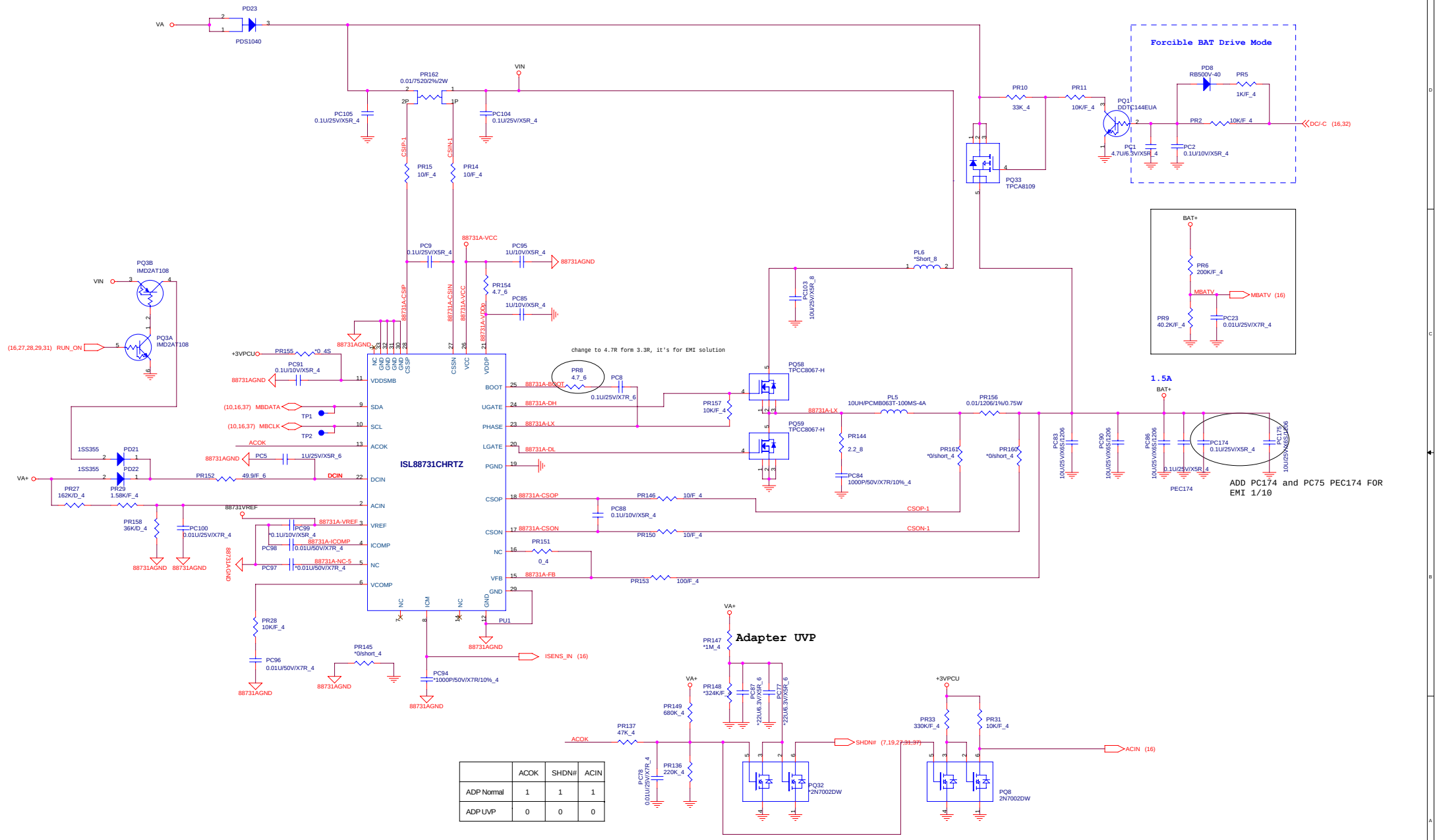

	ACOK	SHDN#	ACIN
ADP Normal	1	1	1
ADP UVP	0	0	0

1.Level 1 Environment-related Substances Should Never be Used.
2.Recycled Resin and Coated Wire should be procured from Green Partners.

Quanta Computer Inc.
PROJECT : Chief River

Size	Document Number	Rev
	CHARGER(ISL88731C)	1A

Date: Thursday, January 17, 2013 Sheet 33 of 41

VGA-CORE

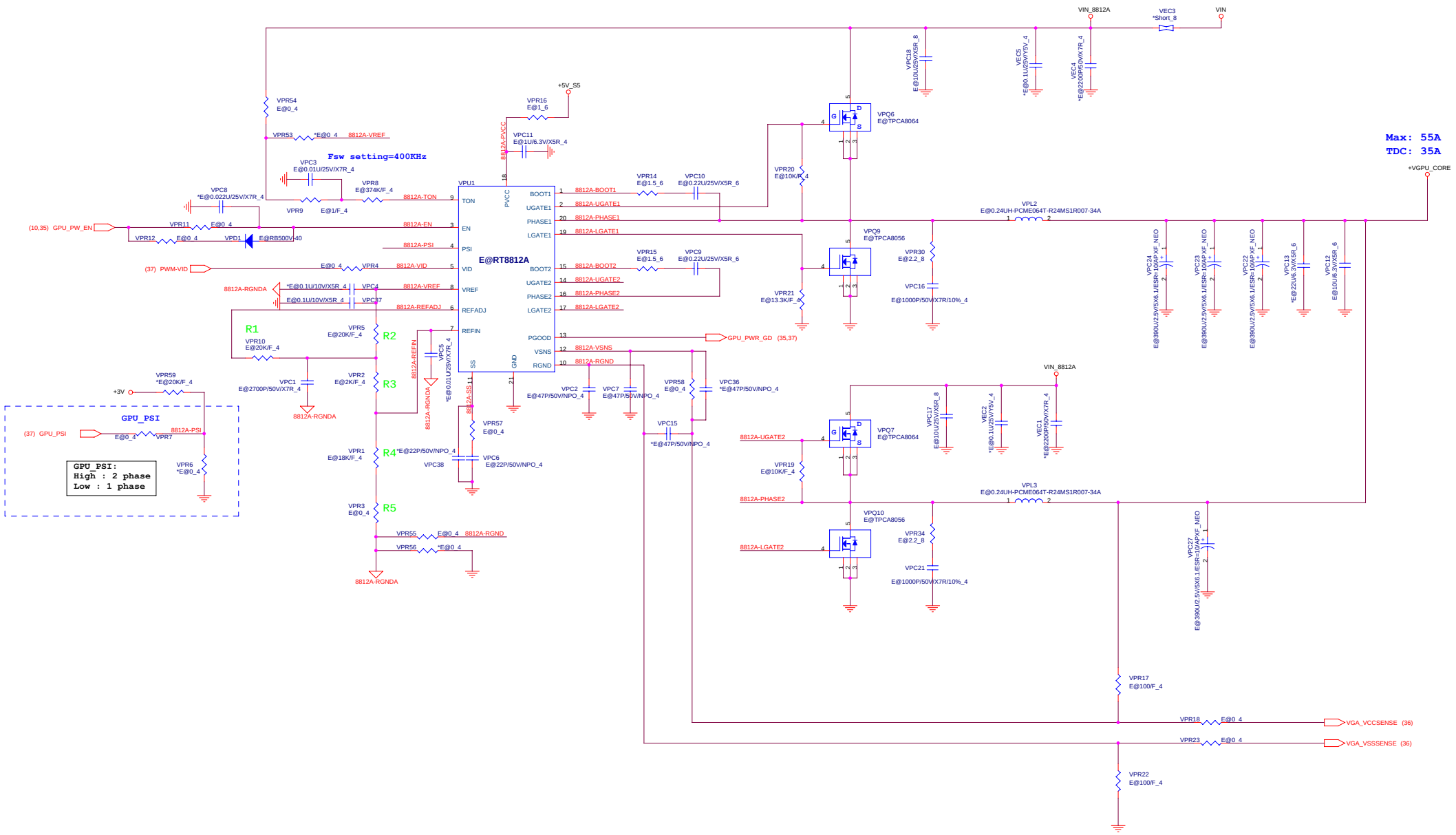

1.Level 1 Environment-related Substances Should Never be Used.
2.Recycled Resin and Coated Wire should be procured from Green Partners.

Quanta Computer Inc.
PROJECT : Chief River

Size	Document Number	Rev
	VGA_CORE (RT8812A)	1A

Date: Thursday, January 17, 2013 Sheet 34 of 41

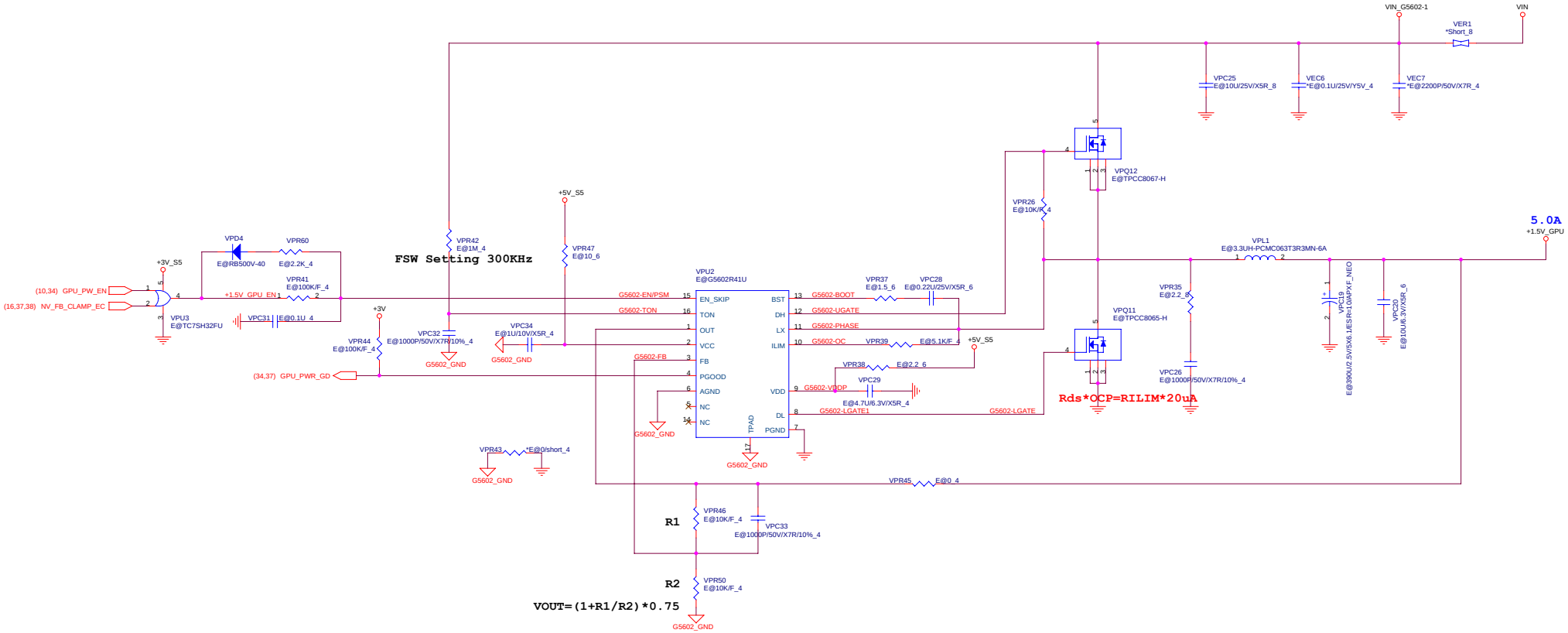

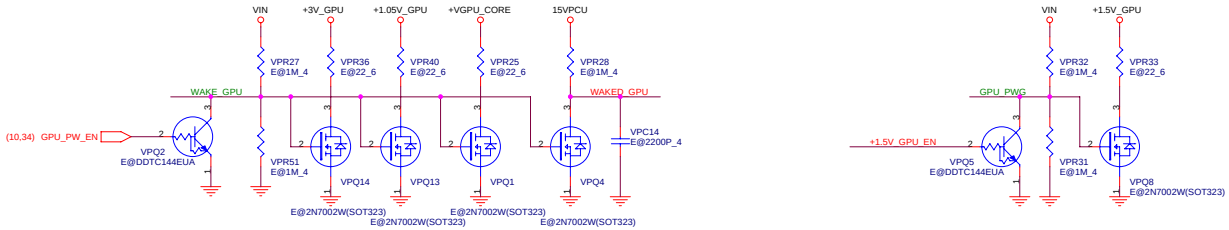

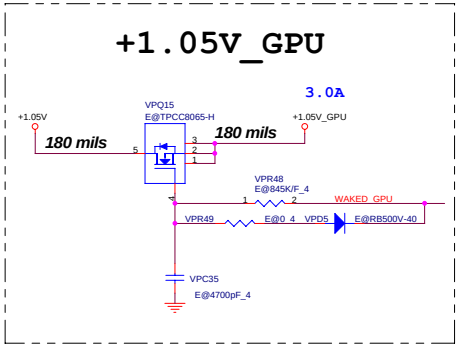

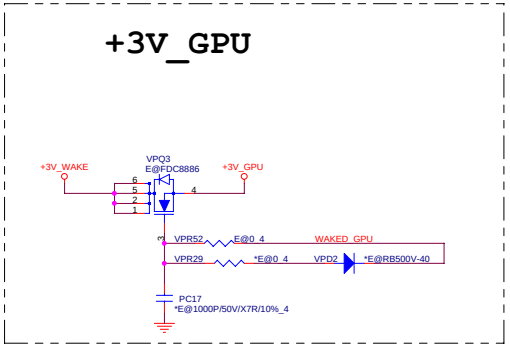

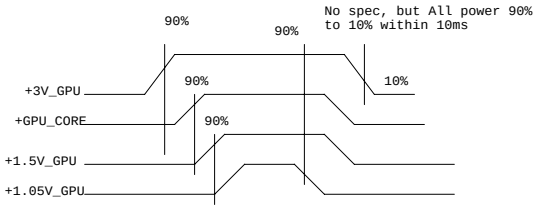

1.Level 1 Environment-related Substances Should Never be Used.
2.Recycled Resin and Coated Wire should be procured from Green Partners.

Quanta Computer Inc.
PROJECT : Chief River

Size	Document Number	Rev
	1.8_GPU / 1.0_GPU	1A

Date: Thursday, January 17, 2013 Sheet 35 of 41

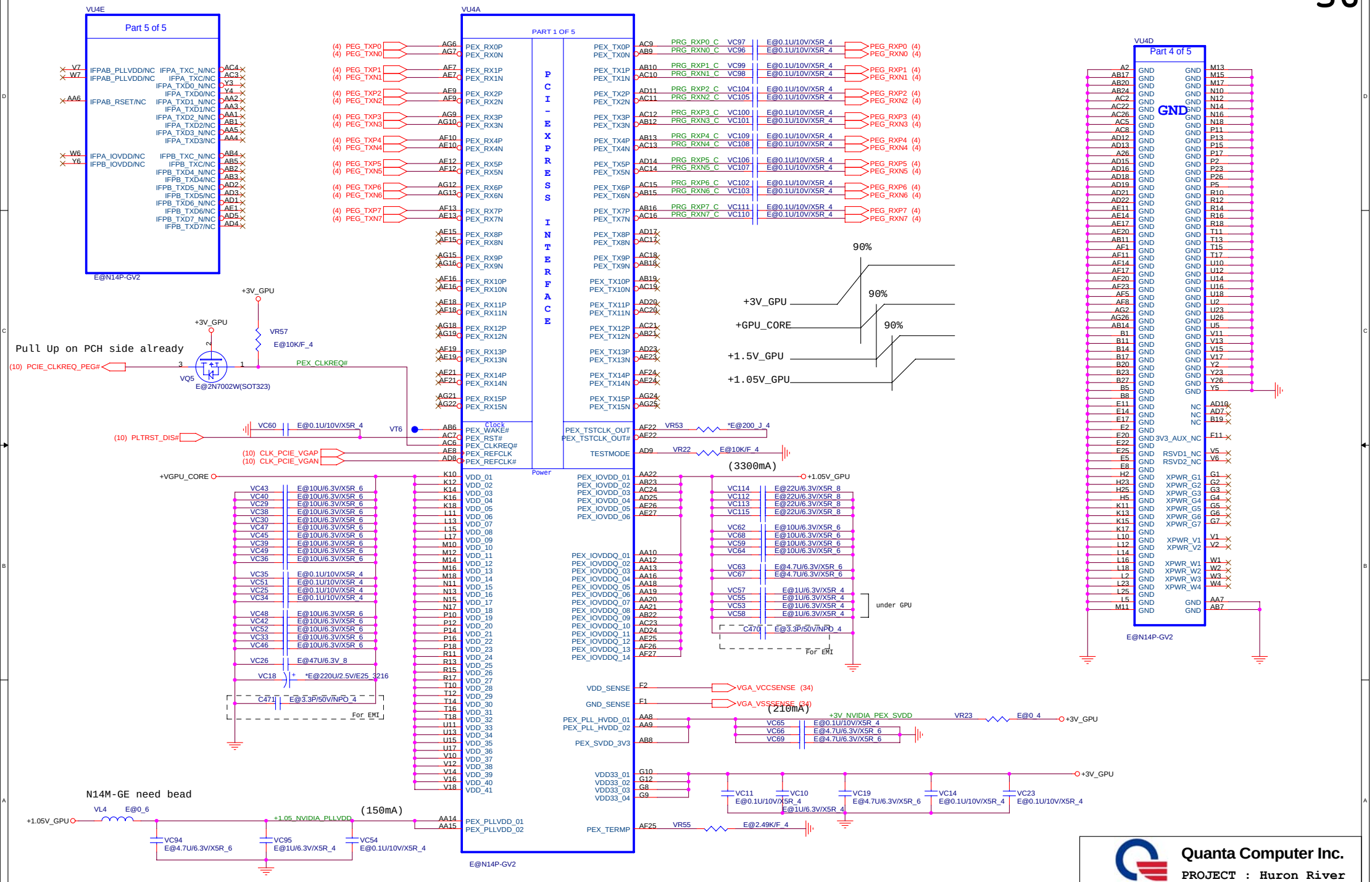

1.Level 1 Environment-related Substances Should Never be Used.
2.Recycled Resin and Coated Wire should be procured from Green Partners.

Quanta Computer Inc.

PROJECT : Huron River

Size	Document Number	Rev
	Nvidia 1/4	1A

Date: Thursday, January 17, 2013 Sheet 36 of 41

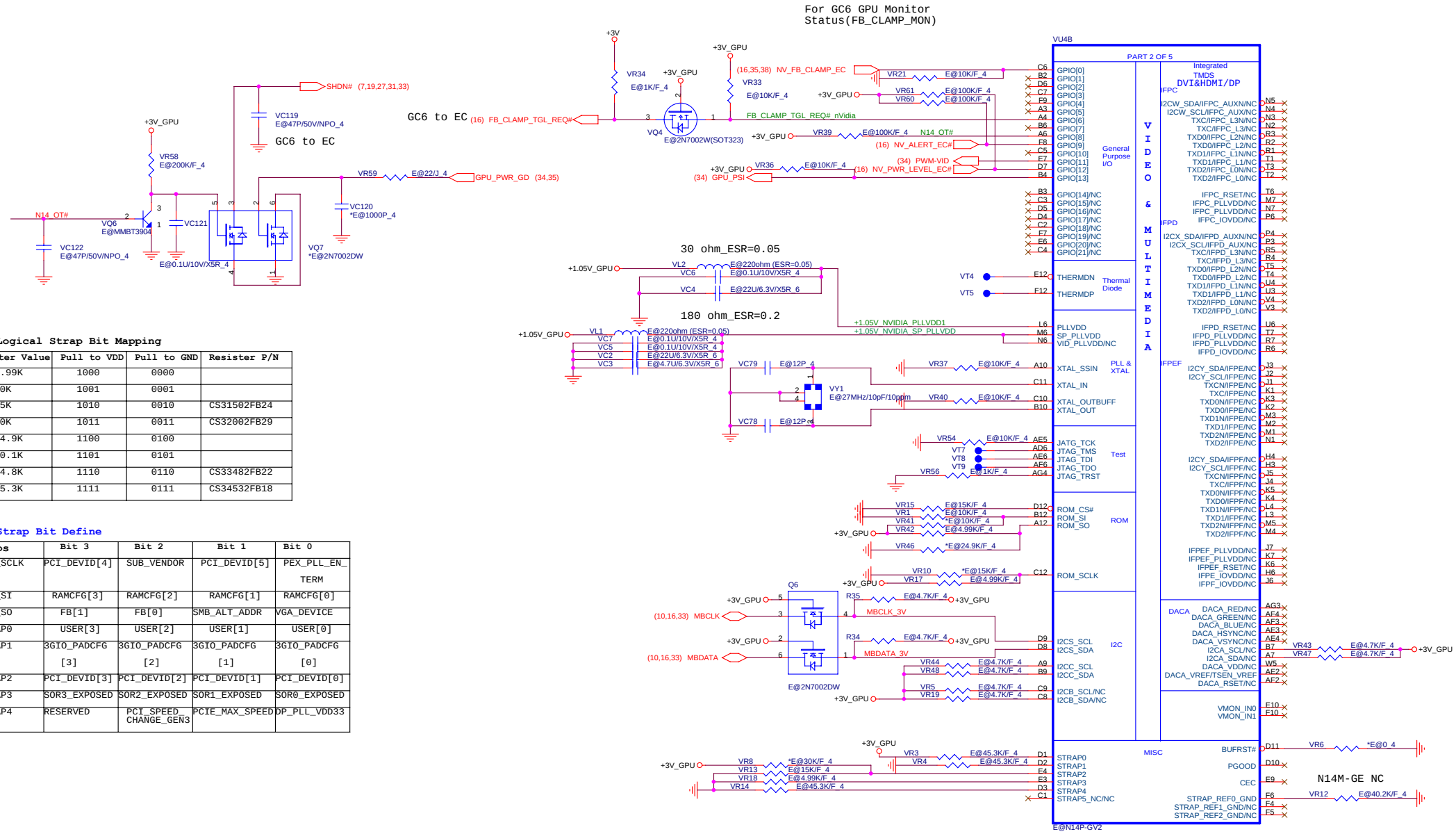

N14 Logical Strap Bit Mapping

Resister Value	Pull to VDD	Pull to GND	Resister P/N
4.99K	1000	0000	
10K	1001	0001	
15K	1010	0010	CS31502FB24
20K	1011	0011	CS32002FB29
24.9K	1100	0100	
30.1K	1101	0101	
34.8K	1110	0110	CS33482FB22
45.3K	1111	0111	CS34532FB18

N14 Strap Bit Define

Straps	Bit 3	Bit 2	Bit 1	Bit 0
ROM_SCLK	PCI_DEVID[4]	SUB_VENDOR	PCI_DEVID[5]	PEX_PLL_EN_ TERM
ROM_SI	RAMCFG[3]	RAMCFG[2]	RAMCFG[1]	RAMCFG[0]
ROM_SO	FB[1]	FB[0]	SMB_ALT_ADDR	VGA_DEVICE
STRAP0	USER[3]	USER[2]	USER[1]	USER[0]
STRAP1	3GIO_PADCFG [3]	3GIO_PADCFG [2]	3GIO_PADCFG [1]	3GIO_PADCFG [0]
STRAP2	PCI_DEVID[3]	PCI_DEVID[2]	PCI_DEVID[1]	PCI_DEVID[0]
STRAP3	SOR3_EXPOSED	SOR2_EXPOSED	SOR1_EXPOSED	SOR0_EXPOSED
STRAP4	RESERVED	PCI_SPEED_ CHANGE_GEN3	PCIE_MAX_SPEED	DP_PLL_VDD33

	VRAM Capacity	VRAM Vender	ID	VR1	Mfr P/N	Quanta P/N
N14M-LP N14P-GV2	128Mx16 DDR3	Samsung	0111	PD45.3K	K4W2G1646E-BC11	AKD5MGGT525
		Hynix	0110	PD34.8K	H5TQ2G63DFR-11C	AKD5MGWTW15
	256Mx16 DDR3	Samsung	0011	PD20K	K4W4G1646B-HC11	AKD5MGWT525
		Hynix	0010(TBD)	PD15K	H5TC4G63AFR-11C	AKD5PGWTW10

1.Level 1 Environment-related Substances Should Never be Used.
2.Recycled Resin and Coated Wire should be procured from Green Partners.

Quanta Computer Inc.

PROJECT : Huron River

Size	Document Number	Rev
	Nvidia 2/4	1A

Date: Thursday, January 17, 2013 Sheet 37 of 41

Down Side VRAM TOP/BOT

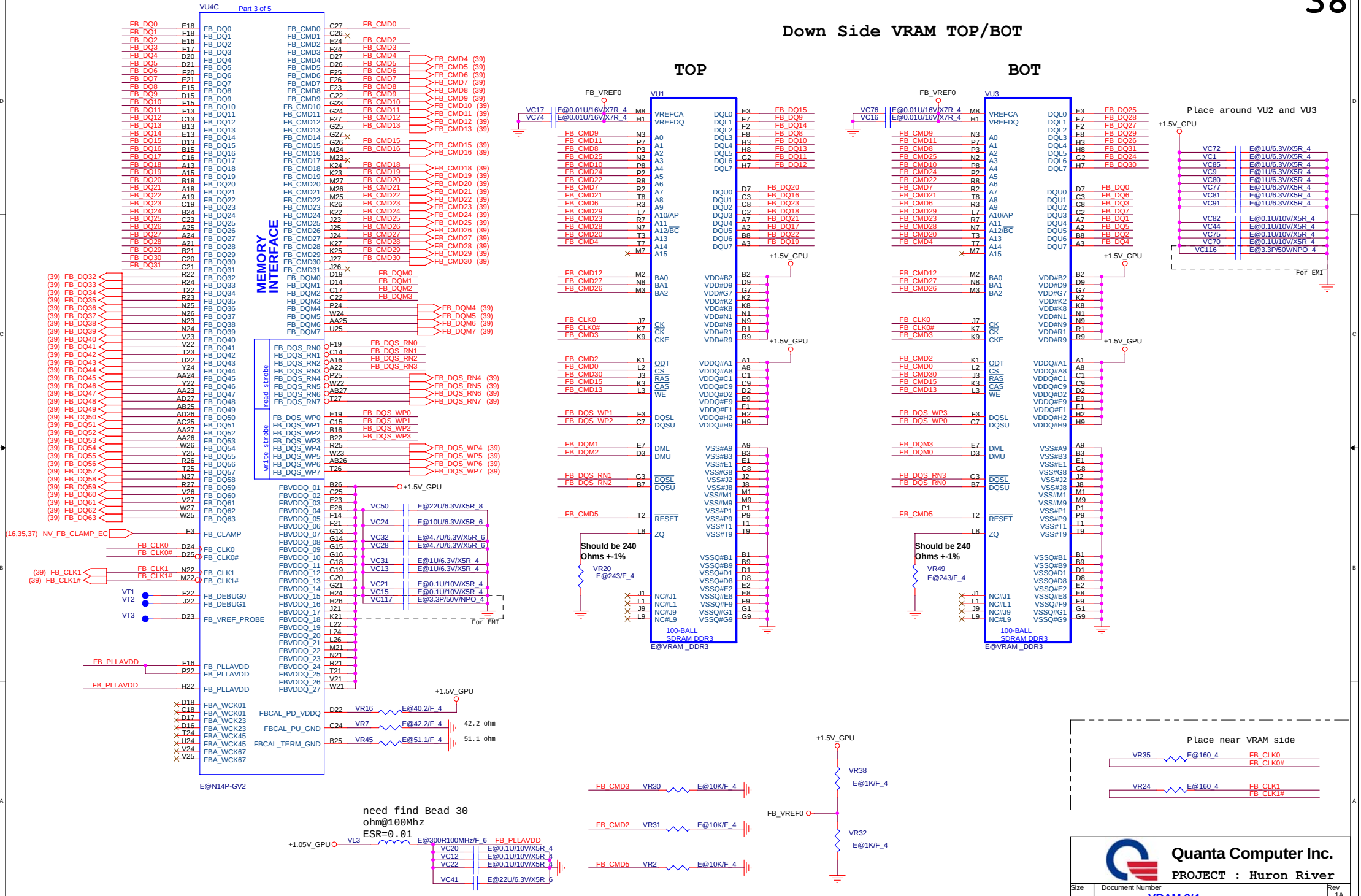

1.Level 1 Environment-related Substances Should Never be Used.
2.Recycled Resin and Coated Wire should be procured from Green Partners.

Quanta Computer Inc.
PROJECT : Huron River

Size	Document Number	Rev
	VRAM 3/4	1A

Date: Thursday, January 17, 2013 Sheet 38 of 41

Up Side VRAM TOP/BOT

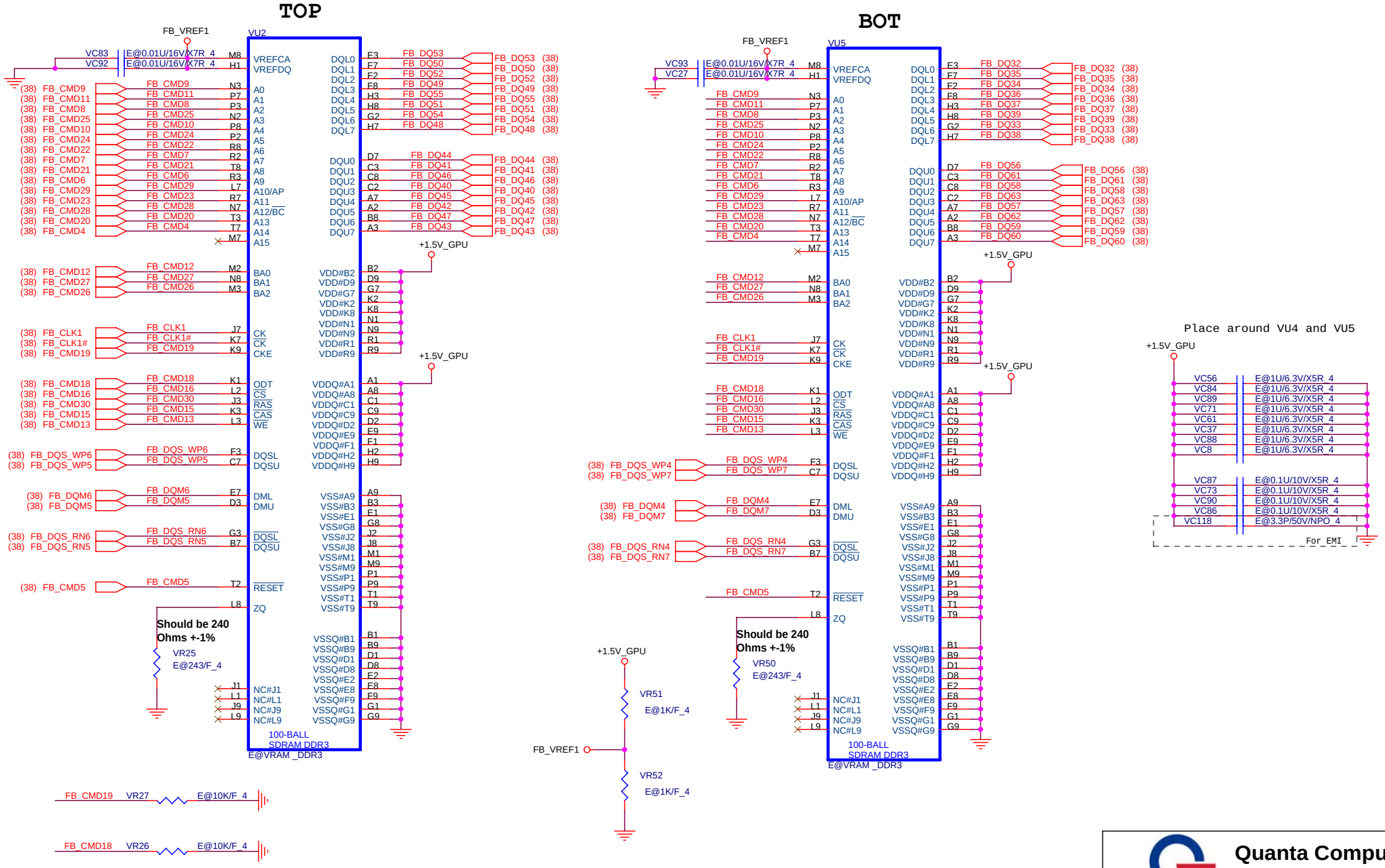

1.Level 1 Environment-related Substances Should Never be Used.
2.Recycled Resin and Coated Wire should be procured from Green Partners.

Quanta Computer Inc.

PROJECT : Huron River

Size	Document Number	Rev
	VRAM 4/4	1A

Date: Thursday, January 17, 2013 Sheet 39 of 41

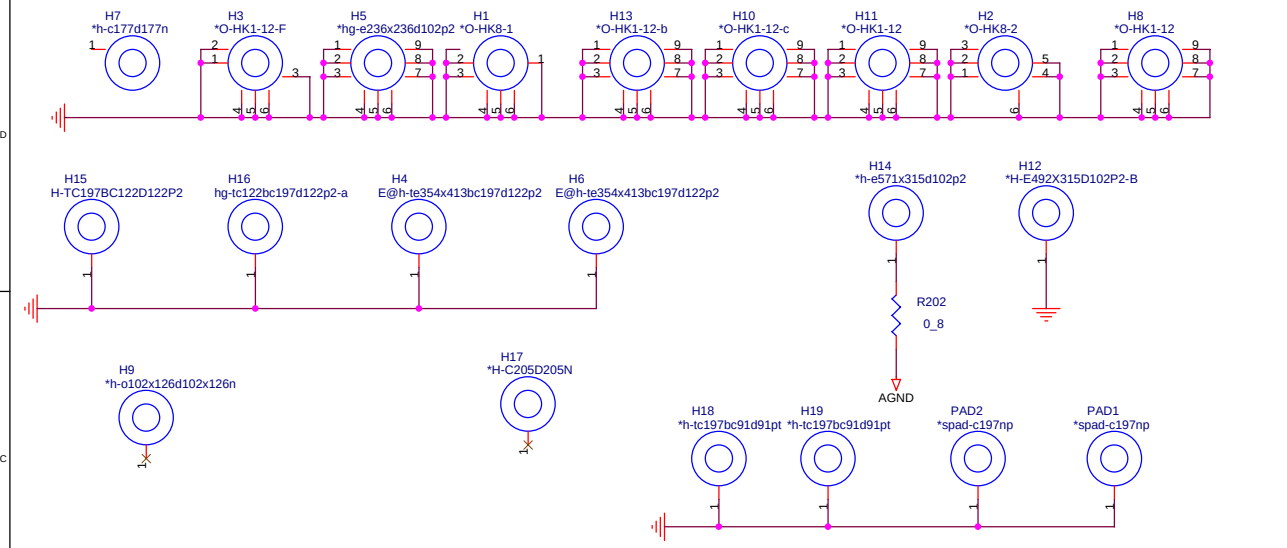

KEY BOARD Connector

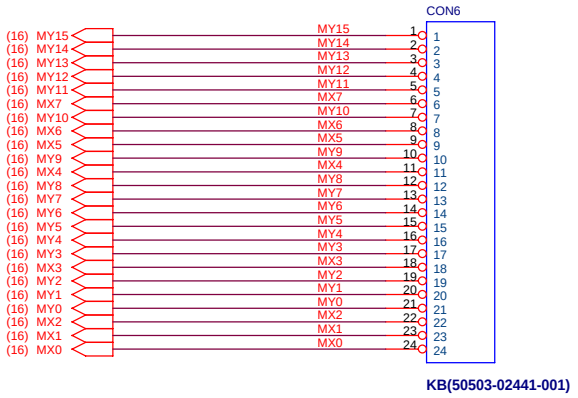

MX0	C386	220P 4
MX1	C385	220P 4
MX2	C384	220P 4
MY0	C383	220P 4
MY1	C380	220P 4
MY2	C377	220P 4
MX3	C379	220P 4
MY3	C376	220P 4
MY4	C374	220P 4
MY5	C57	220P 4
MY6	C49	220P 4
MY7	C58	220P 4
MY8	C52	220P 4
MX4	C373	220P 4
MY9	C372	220P 4
MX5	C50	220P 4
MX6	C46	220P 4
MY10	C43	220P 4
MX7	C45	220P 4
MY11	C44	220P 4
MY12	C41	220P 4
MY13	C55	220P 4
MY14	C53	220P 4
MY15	C39	220P 4

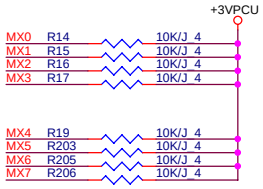

+5V_WAKE	C280	1000P/50V/X7R/10% 4	+3V
	C346	1000P/50V/X7R/10% 4	
	C331	1000P/50V/X7R/10% 4	
	C265	1000P/50V/X7R/10% 4	
+5V_WAKE	C253	1000P/50V/X7R/10% 4	
	C254	1000P/50V/X7R/10% 4	
+5V_WAKE	C354	1000P/50V/X7R/10% 4	+3V_WAKE
	C353	1000P/50V/X7R/10% 4	
	C345	1000P/50V/X7R/10% 4	
	C355	1000P/50V/X7R/10% 4	
	C342	1000P/50V/X7R/10% 4	
	C339	1000P/50V/X7R/10% 4	
	C54	1000P/50V/X7R/10% 4	
	C106	1000P/50V/X7R/10% 4	
+3V_WAKE	C260	1000P/50V/X7R/10% 4	+3V
	C347	1000P/50V/X7R/10% 4	
	C340	1000P/50V/X7R/10% 4	
	C350	1000P/50V/X7R/10% 4	
	C352	1000P/50V/X7R/10% 4	
	C447	1000P/50V/X7R/10% 4	
	C341	1000P/50V/X7R/10% 4	
	C103	1000P/50V/X7R/10% 4	
	C348	1000P/50V/X7R/10% 4	
	C48	1000P/50V/X7R/10% 4	
	C349	1000P/50V/X7R/10% 4	
	C351	1000P/50V/X7R/10% 4	
+3V_WAKE	C1	1000P/50V/X7R/10% 4	
	C3	1000P/50V/X7R/10% 4	
+3V_WAKE	C16	1000P/50V/X7R/10% 4	VIN
	C33	1000P/50V/X7R/10% 4	
+3V	C267	1000P/50V/X7R/10% 4	
	C315	1000P/50V/X7R/10% 4	
	C337	1000P/50V/X7R/10% 4	
	C334	1000P/50V/X7R/10% 4	
	C336	1000P/50V/X7R/10% 4	
	C335	1000P/50V/X7R/10% 4	
+3V	C317	1000P/50V/X7R/10% 4	+3V_S5
	C252	1000P/50V/X7R/10% 4	
	C261	1000P/50V/X7R/10% 4	
	C313	1000P/50V/X7R/10% 4	
	C279	1000P/50V/X7R/10% 4	
	C323	1000P/50V/X7R/10% 4	
+3V	C101	1000P/50V/X7R/10% 4	+1.05V
	C64	1000P/50V/X7R/10% 4	
	C100	1000P/50V/X7R/10% 4	
	C99	1000P/50V/X7R/10% 4	
+3V	C251	1000P/50V/X7R/10% 4	
	C428	1000P/50V/X7R/10% 4	
	C409	1000P/50V/X7R/10% 4	
	C105	1000P/50V/X7R/10% 4	
+3V_S5	C250	1000P/50V/X7R/10% 4	
	C263	1000P/50V/X7R/10% 4	
	C299	1000P/50V/X7R/10% 4	
+1.05V	C170	1000P/50V/X7R/10% 4	
	C59	1000P/50V/X7R/10% 4	
	C104	1000P/50V/X7R/10% 4	
	C412	1000P/50V/X7R/10% 4	
	C381	1000P/50V/X7R/10% 4	
	C102	1000P/50V/X7R/10% 4	
+VCC_GFX	C143	1000P/50V/X7R/10% 4	
	C223	1000P/50V/X7R/10% 4	
	C234	1000P/50V/X7R/10% 4	
	C140	1000P/50V/X7R/10% 4	

+VCC_CORE	C66	1000P/50V/X7R/10% 4	
	C63	1000P/50V/X7R/10% 4	
	C393	1000P/50V/X7R/10% 4	
	C65	1000P/50V/X7R/10% 4	
+1.05V_GPU	C371	1000P/50V/X7R/10% 4	
	C47	1000P/50V/X7R/10% 4	
+1.5V_GPU	C2	1000P/50V/X7R/10% 4	
	C369	1000P/50V/X7R/10% 4	
	C362	1000P/50V/X7R/10% 4	
	C370	1000P/50V/X7R/10% 4	
	C10	1000P/50V/X7R/10% 4	
	C17	1000P/50V/X7R/10% 4	
	C26	1000P/50V/X7R/10% 4	
	C27	1000P/50V/X7R/10% 4	
VIN	C11	1000P/50V/X7R/10% 4	
	C22	1000P/50V/X7R/10% 4	
	C5	1000P/50V/X7R/10% 4	
	C36	1000P/50V/X7R/10% 4	
	C7	1000P/50V/X7R/10% 4	
	C9	1000P/50V/X7R/10% 4	
	C51	1000P/50V/X7R/10% 4	
	C61	1000P/50V/X7R/10% 4	
VIN	C368	1000P/50V/X7R/10% 4	+1.5V_GPU
	C367	1000P/50V/X7R/10% 4	
VIN	C25	1000P/50V/X7R/10% 4	+VGPU_CORE
	C30	1000P/50V/X7R/10% 4	
+VCC_CORE	C138	1000P/50V/X7R/10% 4	+1.05V
	C396	1000P/50V/X7R/10% 4	
+VCC_CORE	C121	1000P/50V/X7R/10% 4	+VCC_GFX
+1.5V_CPU	C244	1000P/50V/X7R/10% 4	
	C248	1000P/50V/X7R/10% 4	
	C247	1000P/50V/X7R/10% 4	
	C246	1000P/50V/X7R/10% 4	+1.5V_SUS

1.Level 1 Environment-related Substances Should Never be Used.
2.Recycled Resin and Coated Wire should be procured from Green Partners.

Quanta Computer Inc.

PROJECT : HK5

Size	Document Number	Rev
	HOLE/EMI/KB	1A

Date: Thursday, January 17, 2013 Sheet 40 of 41

USB PORT Architecture	
PORT 0	USB3.0
PORT 1	USN3.0
PORT 2	USN2.0
PORT 3	USB2.0
PORT 4	NFC
PORT 5	N/A
PORT 6	N/A
PORT 7	N/A
PORT 8	N/A
PORT 9	WiMax/BT
PORT 10	Camera
PORT 11	Card Reader
PORT 12	Touch Screen
PORT 13	N/A

PCIE BUS	
PORT 1	WLAN Port
PORT 2	CARD READER
PORT 3	GLAN(RTL8111G)
PORT 4	N/A
PORT 5	N/A
PORT 6	N/A
PORT 7	N/A
PORT 8	N/A

SATA BUS	
PORT 0	HDD
PORT 1	N/A
PORT 2	N/A
PORT 3	N/A
PORT 4	ODD
PORT 5	N/A

SM BUS	MBCLK/MBDATA	WRITE	READ	Function
ISL88731CHRTZ	0001 001X	0001 0010	0001 0011	Charger
Nvidia	1001 1110	-	1001 1110	Graphice
LIS331DL	0011 101X	0011 1010	0011 1011	G Sensor

SM BUS	MBCLK_BAT/MBDATA_BAT	WRITE	READ	Function
VGP-BPS35A	0001 011X	0001 0110	0001 0111	Battery

SM BUS	SMB_PCH_CLK/SMB_PCH_DAT	WRITE	READ	Function
DIMM Module0	1010 000X	1010 0000	1010 0001	DDRIII
DIMM Module 1	1010 010X	1010 0100	1010 0101	DDRIII
Synaptics	0010 110X	0010 1100	0010 1101	Click PAD

	0	1
Board ID0	CaspiCRA1-CaspiCRB1 HK8-HK9	SuperiorCRA1-SuperiorCRB1 GD5-GD6
Board ID1	HK8/GD5 14"	HK9/GD6 15"

PCBA SKU	Discrete	UMA
R280(Pull High)	Stuff	No Stuff
R279(Pull Low)	No Stuff	Stuff

	S0	S3	DS3	S4	S5 (Charger Enable)	S5 (Charger Disable)	S5 (Soft OFF) (WoL Disable)	S5 (Soft OFF) (WoL Enable)
RUN_ON	H	L	L	L	L	L	L	L
+3V	H	L	L	L	L	L	L	L
+5V	H	L	L	L	L	L	L	L
+0.75V_DDR_VTT	H	L	L	L	L	L	L	L
+1.05V	H	L	L	L	L	L	L	L
+0.85V	H	L	L	L	L	L	L	L
+1.5V	H	L	L	L	L	L	L	L
+1.8V	H	L	L	L	L	L	L	L
+1.8V_GPU	H	L	L	L	L	L	L	L
+1.0V_GPU	H	L	L	L	L	L	L	L
+VGPU_CORE	H	L	L	L	L	L	L	L
+VCC_GFX	H	L	L	L	L	L	L	L
+VCC_CORE	H	L	L	L	L	L	L	L
SUS_ON	H	H	H	L	L	L	L	L
+1.5V_SUS	H	H	H	L	L	L	L	L
S5_ON	H	H	L	H	L	L	L	H
+5V_S5	H	H	L	H	L	L	L	H
+3V_S5	H	H	L	H	L	L	L	H
EC_WAKE_ON	H	H	H	H	H	L	L	H
+3V_WAKE	H	H	H	H	H	L	L	H
+5V_WAKE	H	H	H	H	H	L	L	H
DEEP_EC_EN	H	H	H	H	L	L	L	L
+3V_S5_DSW	H	H	H	H	L	L	L	L
+3V_SUS	H	H	L	L	L	L	L	L