http://hobi-elektronika.net

Page	Title of schematic page	Rev	Date
01	Index	1A	
02	Block Diagram	1A	
03	Change List	1A	
04	CLOCK GENERATOR	1A	
05	PROCESSOR 1/4(DMI&HOST&PCI)	1A	
06	PROCESSOR 2/4(DDR)	1A	
07	PROCESSOR 3/4(POWER)	1A	
08	PROCESSOR 4/4(GND)	1A	
09	PCH 1/5 (DMI&VIDEO)	1A	
10	PCH 2/5 (SATA/LPC/Azalia)	1A	
11	PCH 3/5 (PCI/PCIE/CLK/USB)	1A	
12	PCH 4/5 (GPIO)	1A	
13	PCH 5/5 (POWER)	1A	
14	DDR3 DIMM	1A	
15	CRT/LVDS	1A	
16	WLAN/EXPRESS CARD	1A	
17	WPCE775L & FLASH	1A	
18	Docking/35001/TP/TPM/BT	1A	
19	HDD/ODD/Camera/DMIC	1A	
20	KB/USB/FAN/Reset	1A	
21	HDMI Conn/Level shift	1A	
22	POWER CPU CORE (ISL62882)	1A	
23	POWER 3VPCU&5VPCU(PM6686)	1A	
24	POWER 1.5VSUS/VTT_MEM	1A	
25	POWER VCC1.05(OZ8111LN)-26A	1A	
26	POWER VCC_CFXCORE(MAX17028)	1A	
27	POWER VCC1.8	1A	
28	POWER CHARGER (ISL6252A)	1A	
29	POWER(ADAPTER IN / CONN)	1A	
30	R5U231	1A	
31	Audio ALC275	1A	
32	LED/Modem/Buttom	1A	
33	Atheros 8131M	1A	

*: NO mount
A@: for HDMI Level shift PS8101
B@: for HDMI Level shift PS8171

QUANTA COMPUTER

Title	Page List	
Size: Custom	Document Number: TW6 Main Board	Rev: 1A
Date: Monday, August 31, 2009	Sheet 1 of 33	

http://hobi-elektronika.net

TW6 Block Diagram

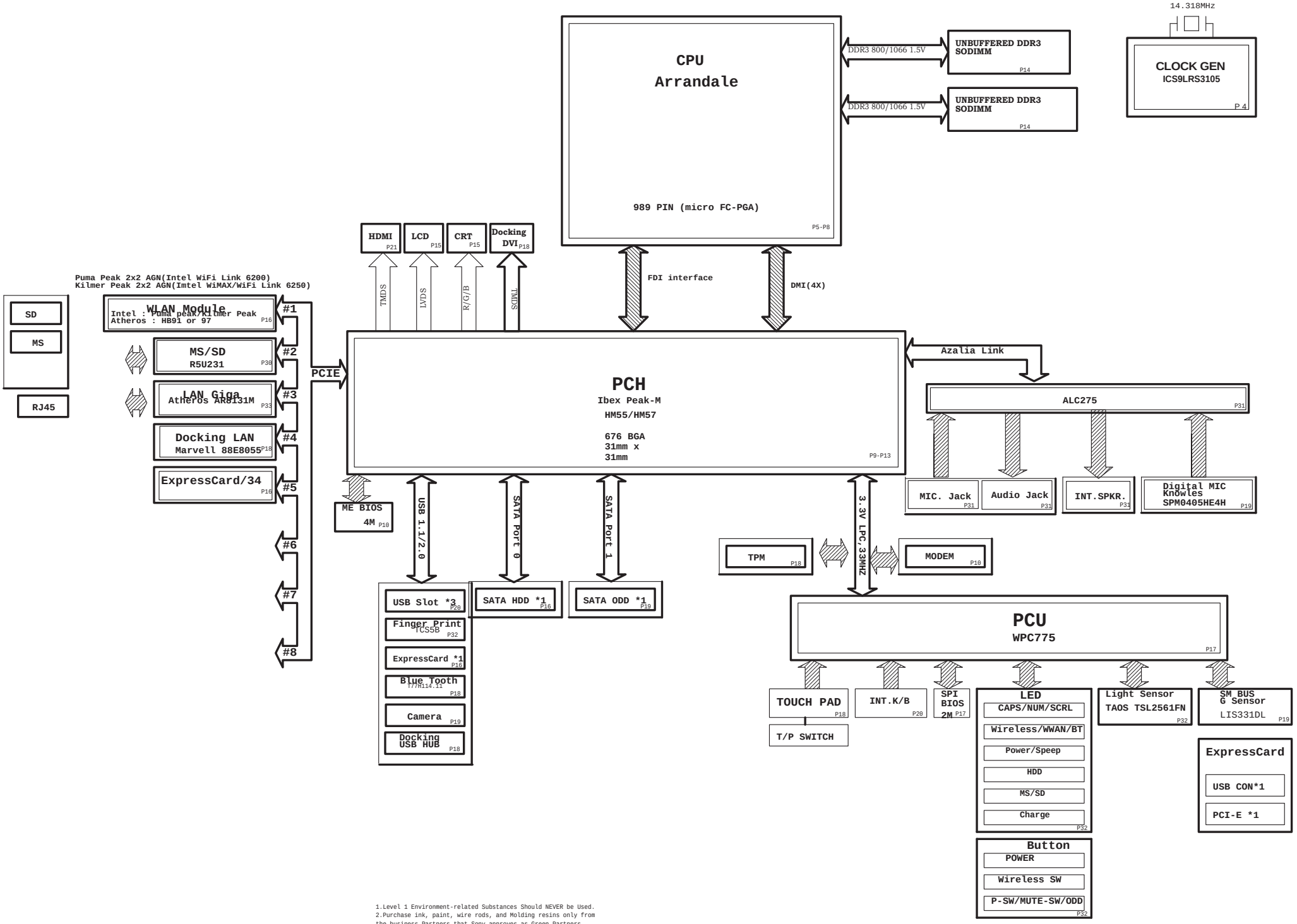

1.Level 1 Environment-related Substances Should NEVER be Used.
2.Purchase ink, paint, wire rods, and Molding resins only from the business Partners that Sony approves as Green Partners.

-P4 Delete R518 0 ohm.
-P4 Delete R1
-P5 Add Q74,R743,R740,R739,R741 for DRAMRST#
-P5 R22 change power from 1.5VSUS to DRAMPWRGD_CPU
-P5 R22 change value from 1.1K/F to 1.5K/F(For S3 power)
-P5 R23 change value from 3K/F to 750/F.(For S3)
-P5 Add U69,C912,R742. (For S3 power)
-P5 U2.F6 change to DRAMRST_CPU#
-P7 C688 mount 330UF(Reduce ripple)
-P7 VDDQ power change to VCC1.5_CPU
-P8 U2.J17 U2.H17 delete net "DDR_VREF_DQ0""DDR_VREF_DQ1"
-P9 Del R76 0ohm
-P10 Y2 change footprint
-P10 C146,C148 change 18P to 15P(CH01506GB01)
-P10 D1 change RB501-40 to use only sw1010CPT. (For 3VPCU leakage)
-P11 Change WLAN PCIE port from port 1 to port 5
-P11 Change ExpressCard PCIE port from port 5 to port 6
-P11 Change C168,C169 from 18P to 8.2P
-P12 U4.F1 change to DRAMRST_CNTRL_PCH.
-P12 R577 change from GND to RVCC3
-P13 L6,L7 change to TDK MKG1608B10NJ(change footprint)
-P13 Add C913 10U on net VCC3_VCCADAC.
-P13 Delete R214,R218,R220 0 ohm.(save cost)
-P13 Delete R215 0_25.(save cost)
-P13 Mount C214,C188 1uF.
-P14 Del R228,R230,R231,R233
-P14 change SMDDR_VREF_DQ0 to SMVREF_GMCH
-P14 Del R734,R735
-P14 Del SMVREF_GMCH1 net
-P14 change SMVREF_GMCH1 to SMVREF_GMCH
-P14 Change SMDDR_VREF_DQ1 to SMVREF_GMCH
-P14 Del R732,R733
-P15 Del L11,L10(save cost)
-P15 Change R237,R238 from 2.2K to 4.7K(Solve CRT DDC VEVS)
-P15 Change C287,C288,C289 from no-mount to mount.(solve CRT R,G,B oversheet issue)
-P15 Add R744 100k pull down for dispon
-P17 Add R746, R747 2.2K for SMBUS
-P17 Add R750 100K .(For EC idle mode save power)
-P17 Change D11 RB501V-40 to SW1010CPT
-P17 Add R748,R749 0ohm
-P17 Del R717,R718,R719
-P17 Change D57 from no-mount to mount
-P17 Add R751 10K pull high to RVCC3
-P23 Change PR72 from no-mount to mount for pull high RVCC3 on PM_SYS_PWRGD
-P17 D9,D10,D12,D13,D14,D15,D16,D17, D18,D19,D58 change from SW1010CPT to RB501V-40.
-P17 R321 no mount
-P17 Add 5V_RESET net
-P18 Change R334 from mount to no-mount
-P19 R588 change from 37.2K/F to 36K/F.(For ODD current limit)
-P19 Del HDD_INTERRUPT1 net
-P30 Del R629(save cost)
-P31 AQ4, AQ5,AR44,AR45 for MIC and HP detect circuit.
-P31 Add A@ for ALC269 mount part, B@ for ALC275 mount
-P31 ADD AR46,AR48,AD9for MIC-VREF
-P31 Add AC45 for PCSPK for ALC269
-P31 Add AR47 and AR49 for HP and MIC detect pin
-P33 C322,C323 change from 27PF to 33PF.
-P33 Del R714
-P33 Change C759 from no-mount to mount
-P33 Change C756 from mount to no-mount
-P33 Add C914 close near C777.

Power portion

090703 Changed PR178 to 6.04K.
090703 Changed PR190 to 9.09K.
090703 Changed PR187 to 18K.
090703 Elijah changed PR55 from 150KR to 3.57KR.
090703 Elijah deleted PR151.
090703 Elijah changed PC137 to 3300pF.
090703 Elijah changed PR157 to 3.57KR.
090703 Elijah changed PR145 to 15KR.
090706 Elijah changed PC19-GND
and PC25-gnd to ISUM- for C6 reboot issue.

090706 Elijah changed PC19-GND and PC25-gnd
to ISUM- for C6 reboot issue.

090819 Changed PR1 from 10R to 2.2R for vender asking.

090819 Changed PU1 to ISL62882HRZ-TR5390 for C states issues.

090819 Changed PR26 to 2.8KR for load line improving.

090819 Changed PQ10, PQ13 to AON7406 for H/W ripple and noise reducing.

090819 Changed PR48 to 90.9K for power-on issue.

090819 Added PC107 and reset circuit for power-on issue.

090819 Changed PR54 to 130KR for OCP.

090819 Added VCC1.5_CPU, VCC1.5_CPU_VCC105_PWRGD and PQ34 for S3 Power saving.

090819 Added PD2 for timing.

090819 Changed PR154 connecting with output capacitors for OCP.

090819 Changed PR187 to 16.5KR for load line improving.

090819 Changed PR326 to 330KR for ACIN signal improving.

090819 Changed PR72 from no-mount to mount

0824
P13-Change C214 from no-mount to mount

0824 P13-Change C190 from 0.1u to 1U

0824 P13- Change C178 from 1U to 0.01U

0824 P5-Add C915 0.047u

0824 P10-Del R583

0824 P31-Change Ar21,AR22 from no-mount to mount

0825 P11-Change RP12 from 2P2R to 0402 x2 for EMI issue.

0825A P18-Add D59 for leakage on DC mode

0826 P10- Change Y2 pin define

0827 P18- Add R754 bypass option

0827A Add C916~C927 for S3 power reduction DG1.0

0828 P12- Change BT_PRS# from GIOP 1 to GPIO12 and pull up to RVCC3
0828 P12- Pull up to VCC3 for GPIO1

0828 isolation power plan for AH34,AH34,AF32

090830 Changed PR54 to 140K for OCP function.

090830 Elijah changed PC221 to 1000P.

090830 Elijah added the VCC1.5_CPU_VCC105_PWRGD circuit 2 sets.

0831B P15-Change L15 to F9 2.6A fuse

0831A P18-Add R760 serial on IRQ_SERIRQ

http://hobi-elektronika.net

QUANTA COMPUTER

Title	Change List	
Size Custom	Document Number TW6 Main Board	Rev 1A
Date: Monday, August 31, 2009	Sheet 3 of 33	

6/21 Change Y1 pin define for GD3 issue.

http://hobi-elektronika.net

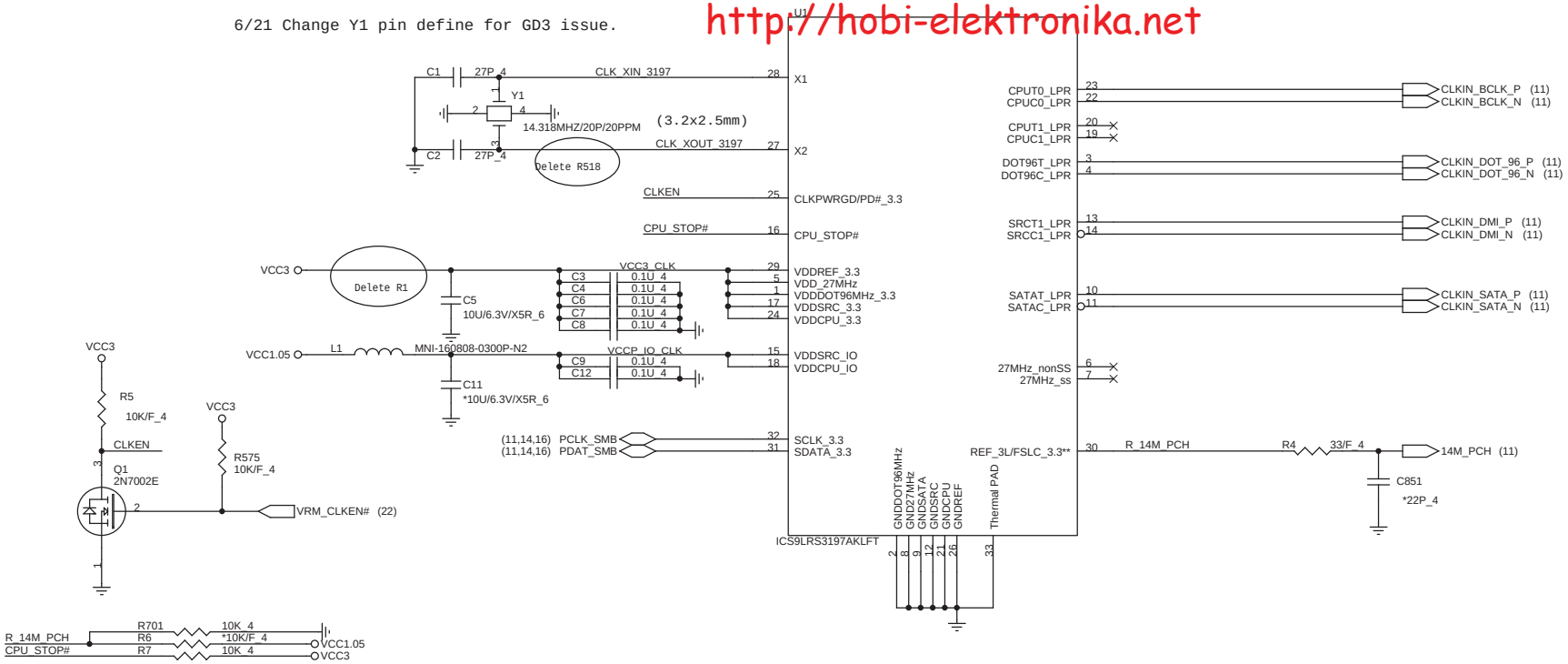

CPU Frequency Select Table					
FSLC	CPU MHz	SRC MHz	REF MHz	USB MHz	DOT MHz
0(default)	133.33	100.00	14.318	48.00	96.00
1	100.00				

Table 2: pin 6, 7 Configuration

B1b4	B1b3	B1b2	B1b1	Pin 6 MHz	Pin 7 MHz	Spread %	Comment
0	0	0	0	N/A	N/A	N/A	N/A
0	0	0	1	N/A	N/A	N/A	N/A
0	0	1	0	27MHz_nonSS	27MHz_SS	-0.5%	
0	0	1	1	27MHz_nonSS	27MHz_SS	-1%	
0	1	0	0	27MHz_nonSS	27MHz_SS	-1.5%	
0	1	0	1	27MHz_nonSS	27MHz_SS	-2%	
0	1	1	0	27MHz_nonSS	27MHz_SS	-0.75%	
0	1	1	1	27MHz_nonSS	27MHz_SS	-1.25%	
1	0	0	0	27MHz_nonSS	27MHz_SS	-1.75%	
1	0	0	1	27MHz_nonSS	27MHz_SS	+-0.5%	
1	0	1	0	27MHz_nonSS	27MHz_SS	+-0.75%	
1	0	1	1	N/A	N/A	N/A	N/A
1	1	0	0	N/A	N/A	N/A	N/A
1	1	0	1	N/A	N/A	N/A	N/A
1	1	1	0	N/A	N/A	N/A	N/A
1	1	1	1	N/A	N/A	N/A	N/A

Table 4: Device ID table

B8b7	B8b6	B8b5	B8b4	Comment
0	0	0	0	56 pin TSSOP
0	0	0	1	64 pin TSSOP
0	0	1	0	Reserved
0	0	1	1	Reserved
0	1	0	0	Reserved
0	1	0	1	72 pin QFN
0	1	1	0	Reserved
0	1	1	1	Reserved
1	0	0	0	32 pin QFN
1	0	0	1	Reserved
1	0	1	0	Reserved
1	0	1	1	Reserved
1	1	0	0	Reserved
1	1	0	1	Reserved
1	1	1	0	Reserved
1	1	1	1	Reserved

Table 3: IO_Vout select table

B9b2	B9b1	B9b0	IO_Vout
0	0	0	0.3V
0	0	1	0.4V
0	1	0	0.5V
0	1	1	0.6V
1	0	0	0.7V
1	0	1	0.8V
1	1	0	0.9V
1	1	1	1.0V

1.Level 1 Environment-related Substances Should NEVER be Used.
2.Purchase ink, paint, wire rods, and Molding resins only from the business Partners that Sony approves as Green Partners.

QUANTA COMPUTER

Title	CLOCK GENERATOR	
Size	Document Number: TW6 Main Board	Rev 2A
Date: Monday, August 31, 2009	Sheet 4 of 33	

ARRANDALE PROCESSOR (DMI,PEG,FDI)

http://hobi-elektronika.net

ARRANDALE PROCESSOR (CLK,MISC,JTAG)

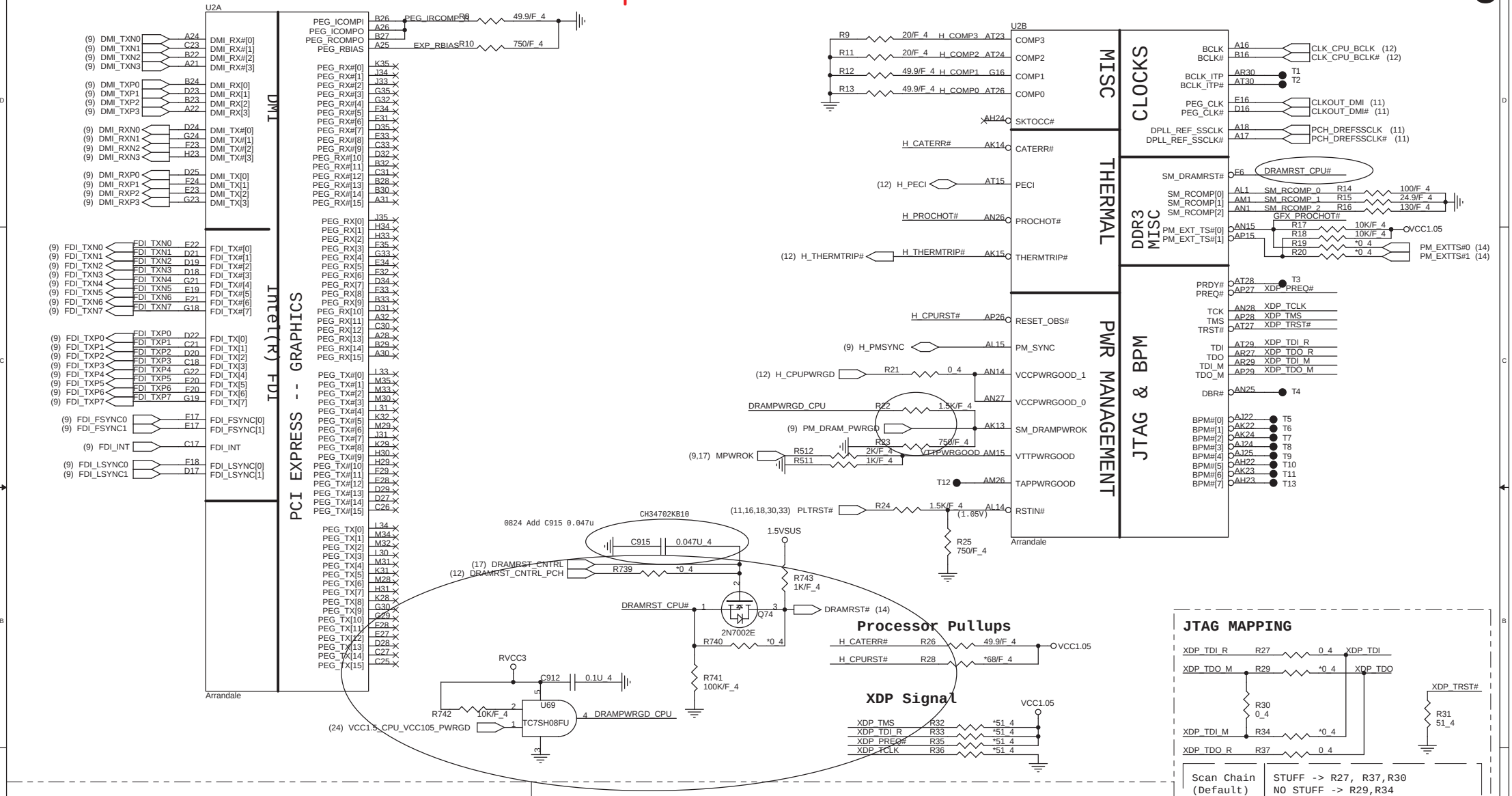

QUANTA COMPUTER

Title: PROCESSOR 1/4(HOST&PCI)

Size: Custom | Document Number: TW6 Main Board | Rev: 2A

Date: Monday, August 31, 2009 | Sheet 5 of 33

1. Level 1 Environment-related Substances Should NEVER be Used.
2. Purchase ink, paint, wire rods, and Molding resins only from the business Partners that Sony approves as Green Partners.

ARRANDALE PROCESSOR (DDR3)

http://hobi-elektronika.net

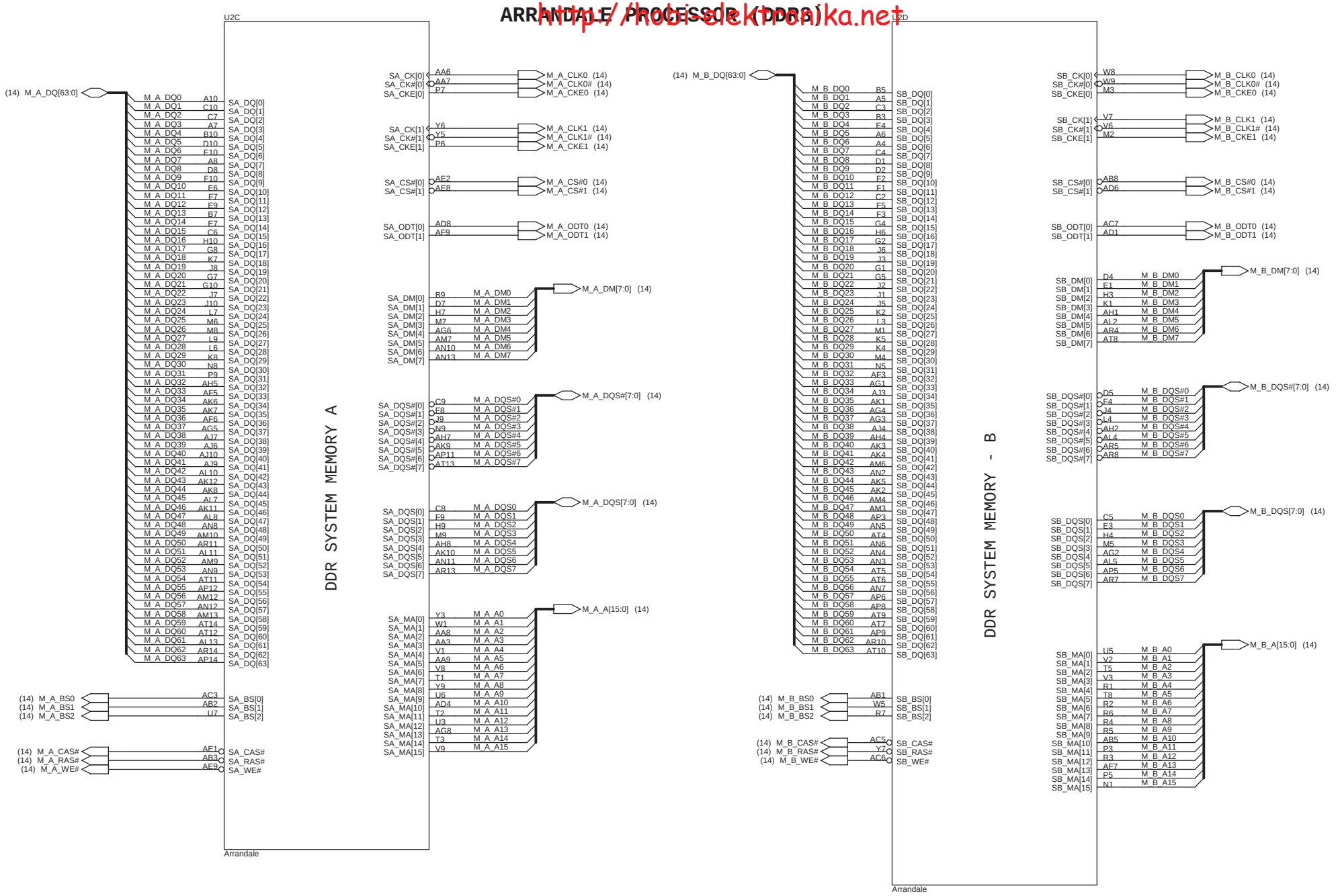

1. Level 1 Environment-related Substances Should NEVER be Used.
2. Purchase ink, paint, wire rods, and Molding resins only from the business Partners that Sony approves as Green Partners.

QUANTA COMPUTER

Title	PROCESSOR 2/4(DDR)	
Size: Custom	Document Number: TW6 Main Board	Rev: 1A
Date: Monday, August 31, 2009	Sheet 6 of 33	

http://hobi-elektronika.net

ARRANDALE PROCESSOR (GRAPHICS POWER)

6/1 Change power consumption of VAXG 15A to 22A
Please note that +VCC_GFX_CORE
should be 1.05V in Auburndale

CPU:
ARRANDALE 1.05V

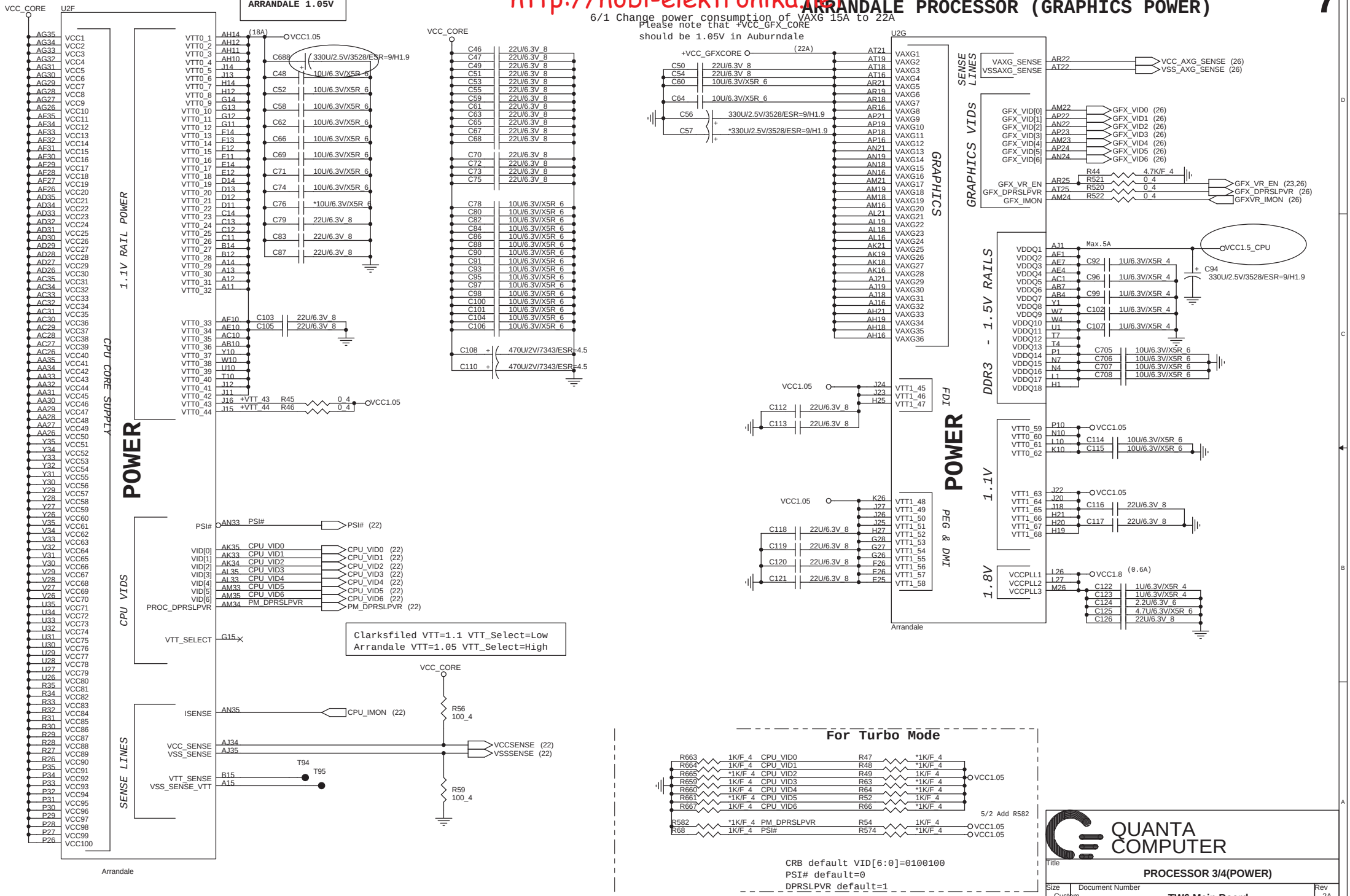

For Turbo Mode

R663	1K/F_4	CPU_VID0	R47	*1K/F_4	
R664	1K/F_4	CPU_VID1	R48	*1K/F_4	
R665	*1K/F_4	CPU_VID2	R49	1K/F_4	VCC1.05
R659	1K/F_4	CPU_VID3	R63	*1K/F_4	
R660	1K/F_4	CPU_VID4	R64	*1K/F_4	
R661	*1K/F_4	CPU_VID5	R52	1K/F_4	
R667	1K/F_4	CPU_VID6	R66	*1K/F_4	
R582	*1K/F_4	PM_DPRSLPVR	R54	1K/F_4	VCC1.05
R68	1K/F_4	PSI#	R574	*1K/F_4	VCC1.05

5/2 Add R582

CRB default VID[6:0]=0100100
PSI# default=0
DPRSLPVR default=1

1. Level 1 Environment-related Substances Should NEVER be Used.
2. Purchase ink, paint, wire rods, and Molding resins only from the business Partners that Sony approves as Green Partners.

QUANTA COMPUTER

Title	PROCESSOR 3/4(POWER)		
Size: Custom	Document Number: TW6 Main Board		Rev: 2A
Date: Monday, August 31, 2009	Sheet 7 of 33		

ARRANDALE PROCESSOR (GND)

http://hobi-elektronika.net

ARRANDALE PROCESSOR(RESERVED, CFG)

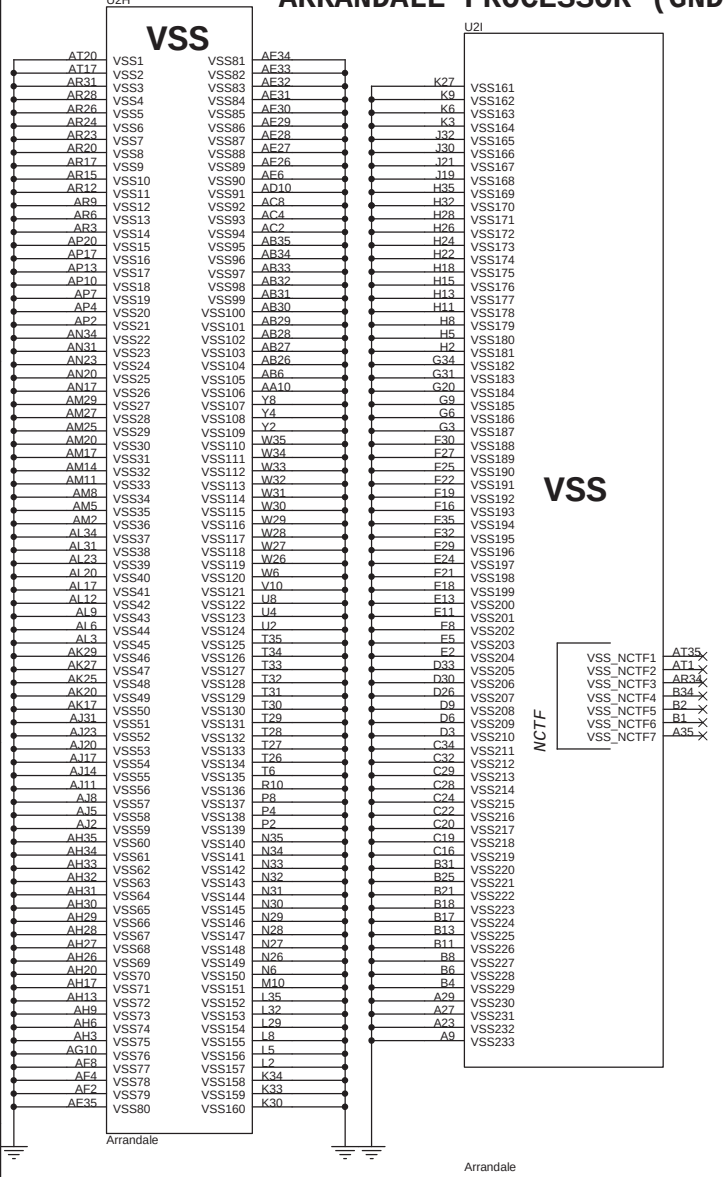

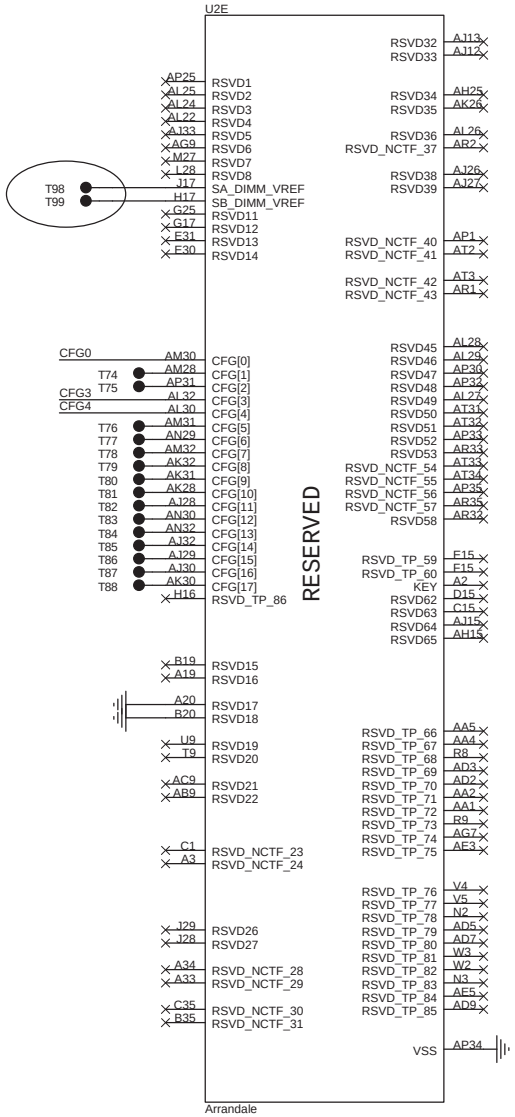

CFG0 R73 *3.01K_4

Not applicable for Clarksfield Processor

PCI-Epress Configuration Select	
CFG0	1 : Single PEG 0 : Bifurcation enabled

CFG3 R74 *3.01K_4

PCI-Epress Static Lane Reversal	
CFG3	1 : Normal Operation 0 : Lane Number Reversed 15 -> 0, 14 -> 1, ...

CFG4 - Display Port Presence	
CFG4	1 : Disabled; No Physical Display Port attached to Embedded Diplay Port 0 : Enabled; An external Display port device is connected to the Embedded Display port

CFG4 R75 *3.01K_4

1. Level 1 Environment-related Substances Should NEVER be Used.
2. Purchase ink, paint, wire rods, and Molding resins only from the business Partners that Sony approves as Green Partners.

QUANTA COMPUTER

Title: PROCESSOR 4/4(GND)

Size: Custom | Document Number: TW6 Main Board | Rev: 2A

Date: Monday, August 31, 2009 | Sheet 8 of 33

IBEX PEAK-M (DMI,FDI,GPIO)

http://hobi-elektronika.net

IBEX PEAK-M (LVDS,DDI)

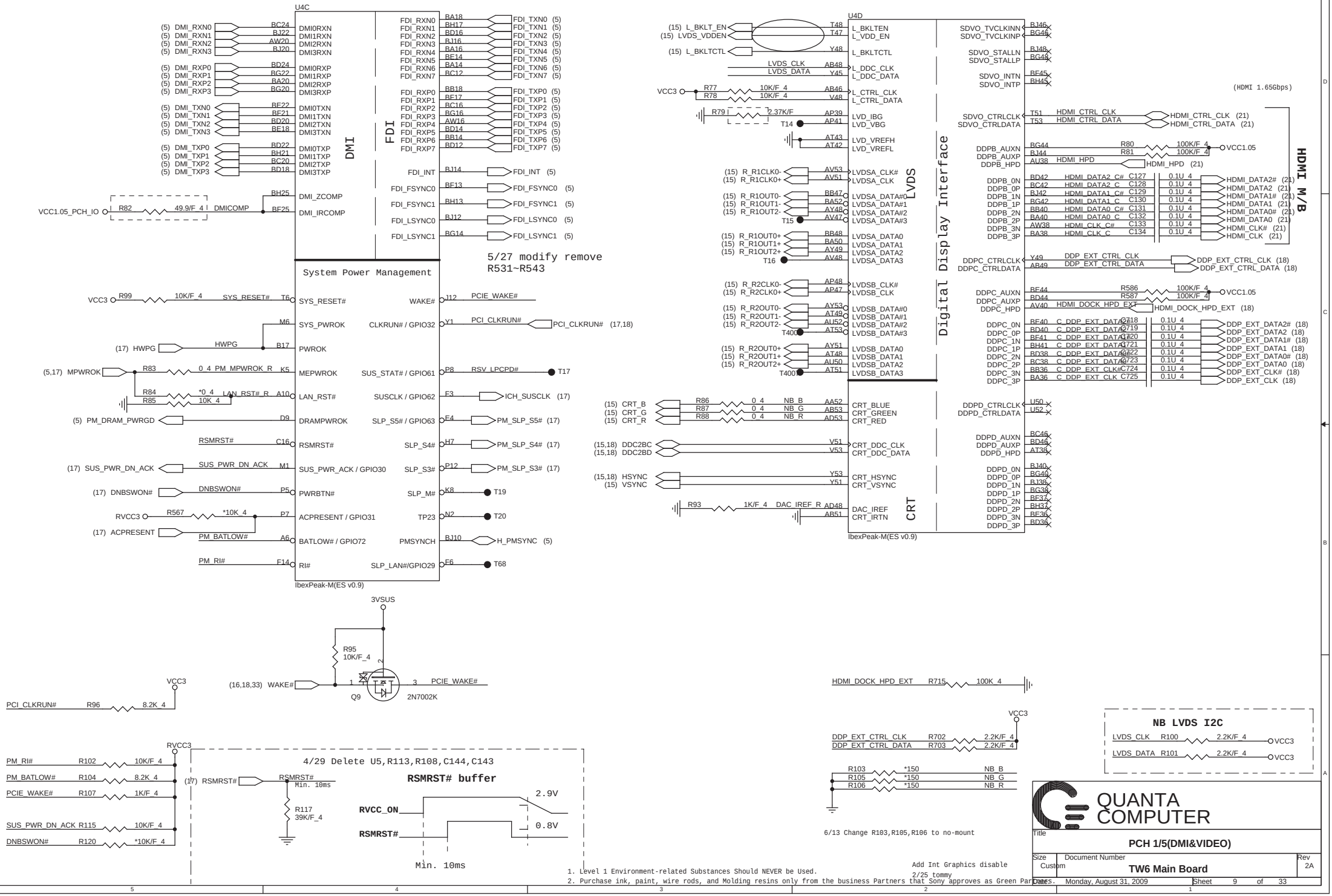

Add Int Graphics disable
2/25 tommy

1. Level 1 Environment-related Substances Should NEVER be Used.
2. Purchase ink, paint, wire rods, and Molding resins only from the business Partners that Sony approves as Green Partners.

QUANTA COMPUTER

Title	PCH 1/5(DMI&VIDEO)
Size	Custom
Document Number	TW6 Main Board
Rev	2A
Date	Monday, August 31, 2009
Sheet	9 of 33

http://hobi-elektronika.net

RTC

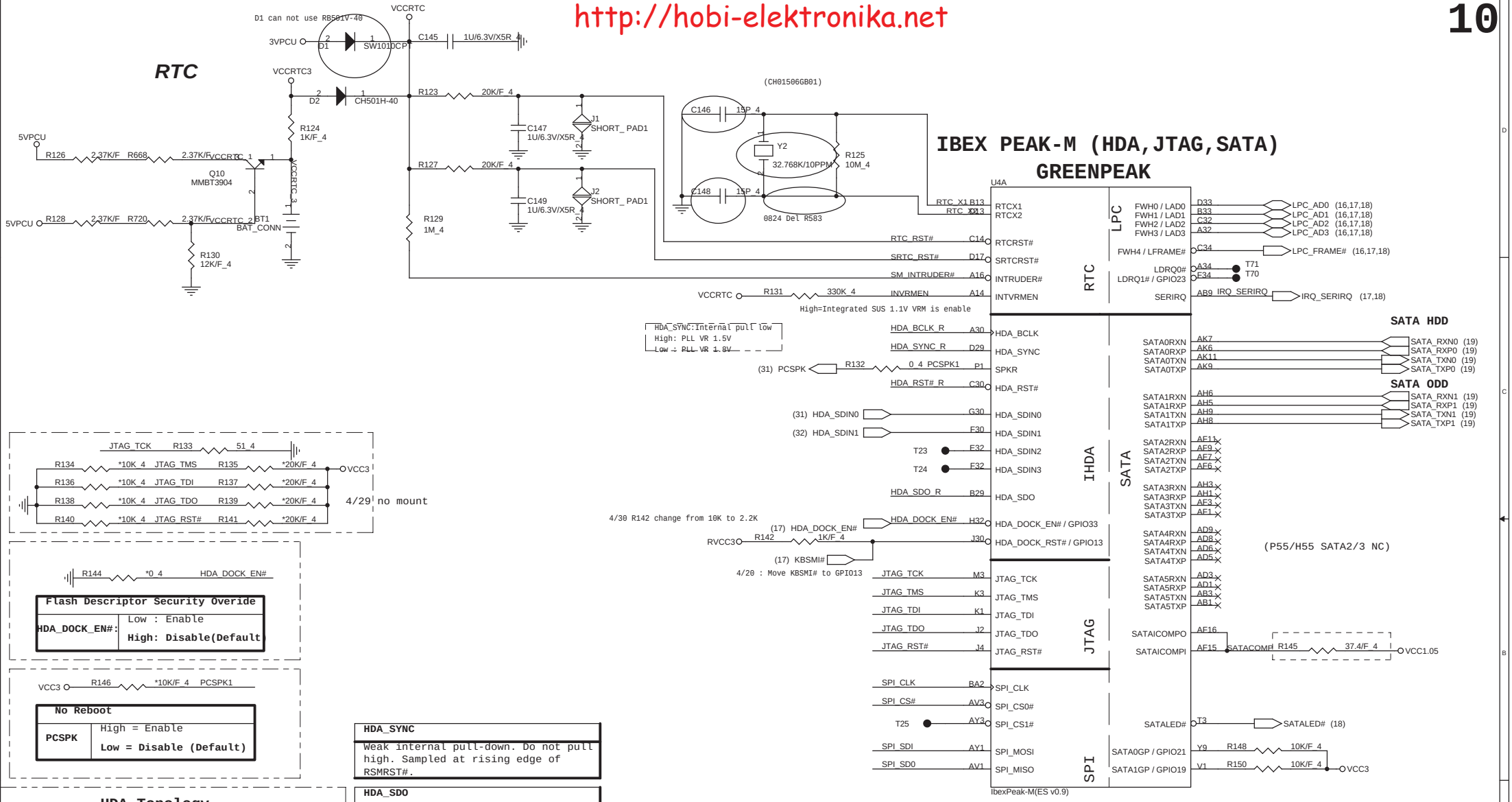

QUANTA COMPUTER

Title	PCH 2/5(SATA)
Size: Custom	Document Number: TW6 Main Board
Rev	2A
Date: Monday, August 31, 2009	Sheet 10 of 33

IBEX PEAK-M (PCI,USB,NVRAM)

http://hobi-elektronika.net

IBEX PEAK-M (PCI-E,SMBUS,CLK)

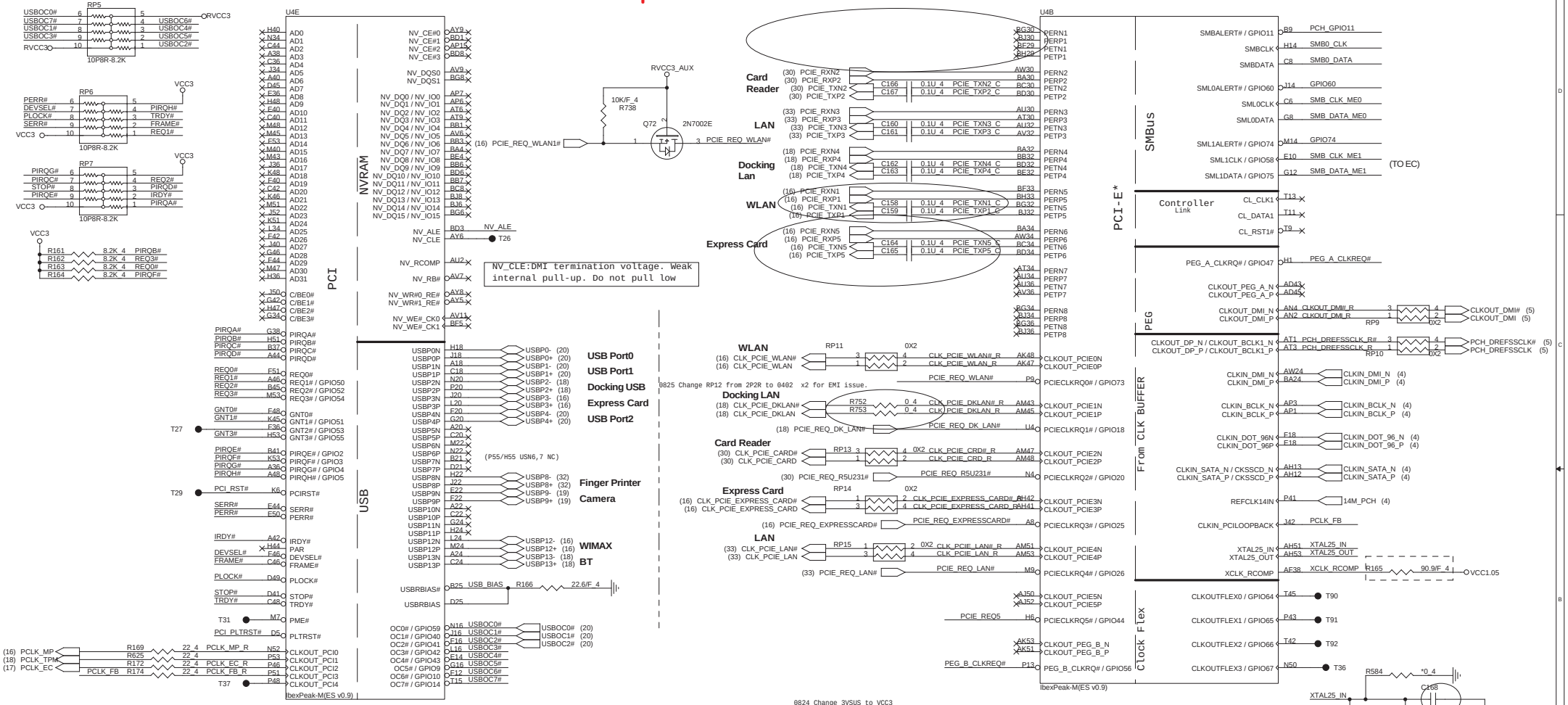

GNT2#/GPIO53 :

High : Internal pull-up

Low : Configures DMI for ESI compatible operation (for servers only. Not for mobile/desktops)

SM BUS for C0 (CLOCK/DRAM)

PCLK_SMB/PDAT_SMB	Address	
SO-DIMM0 SO-DIMM1 ICS9LRS3105 Express Card	1010 000X 1010 010X 1101 0010	A0h A4h D2h

Anti-Theft Technology

NV_ALE	High = Enable **Low = Disable**

A16 swap override Strap/Top-Block Swap Override jumper

GNT3#	Low = A16 Swap override/Top-Block Swap Override enabled **High = Default**

Boot BIOS Strap

GNT0#	GNT#1	Boot BIOS Location
0	0	* **LPC**
0	1	Reserved (NAND)
1	0	PCI
1	1	SPI

GPIO56

If not used, 8.2-k? to 10-k? pull-up to +V3.3A

QUANTA COMPUTER

Title: PCH 3/5(PCI)

Size: Custom | Document Number: TW6 Main Board | Rev: 1A

Date: Monday, August 31, 2009 | Sheet 11 of 33

1. Level 1 Environment-related Substances Should NEVER be Used.
2. Purchase ink, paint, wire rods, and Molding resins only from the business Partners that Sony approves as Green Partners.

IBEX PEAK-M (GPIO,VSS_NCTF,RSVD)

http://hobi-elektronika.net

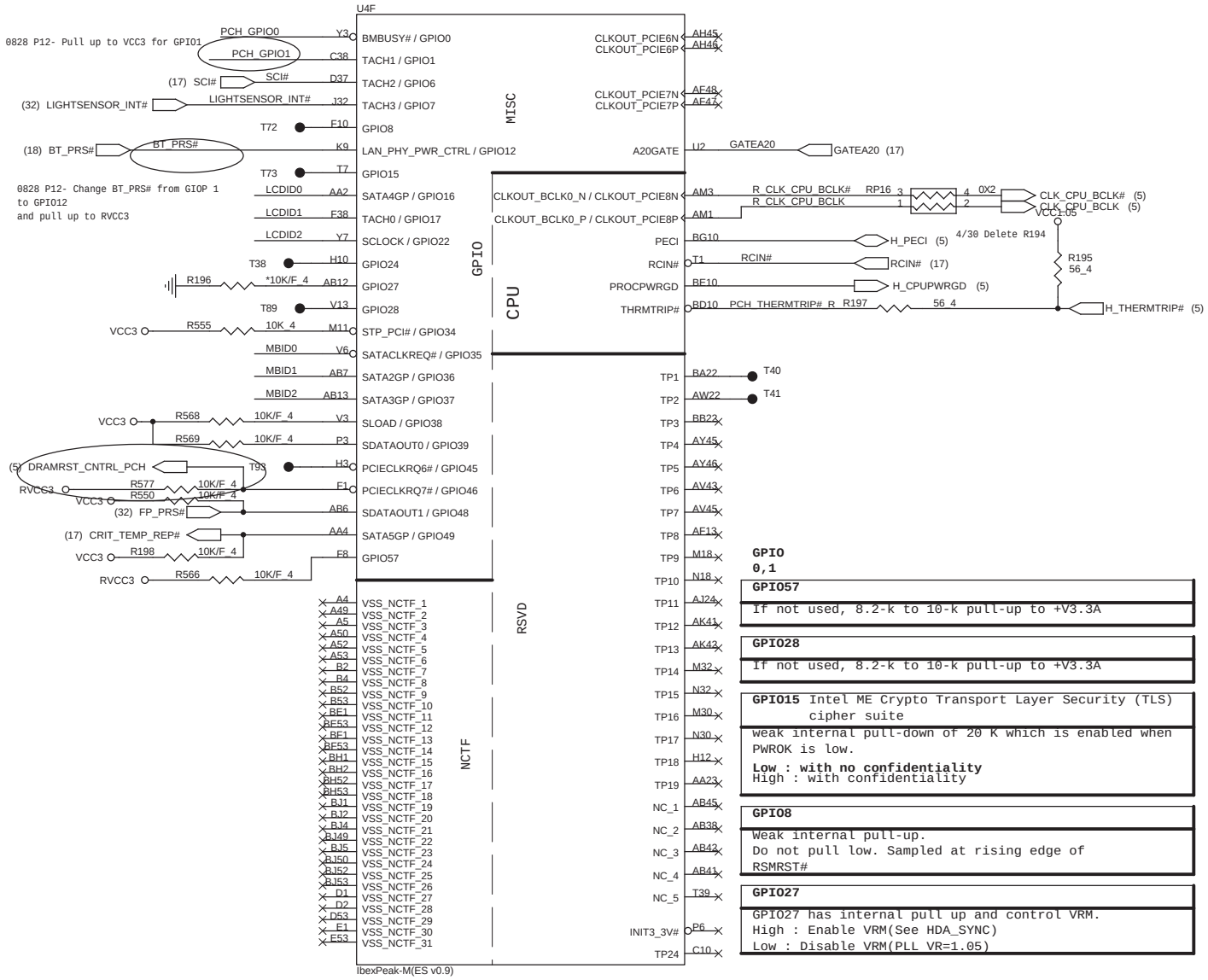

GPIO 0,1

GPIO57

If not used, 8.2-k to 10-k pull-up to +V3.3A

GPIO28

If not used, 8.2-k to 10-k pull-up to +V3.3A

GPIO15 Intel ME Crypto Transport Layer Security (TLS) cipher suite

weak internal pull-down of 20 K which is enabled when PWROK is low.

Low : with no confidentiality
High : with confidentiality

GPIO8

Weak internal pull-up.
Do not pull low. Sampled at rising edge of RSMRST#

GPIO27

GPIO27 has internal pull up and control VRM.
High : Enable VRM(See HDA_SYNC)
Low : Disable VRM(PLL VR=1.05)

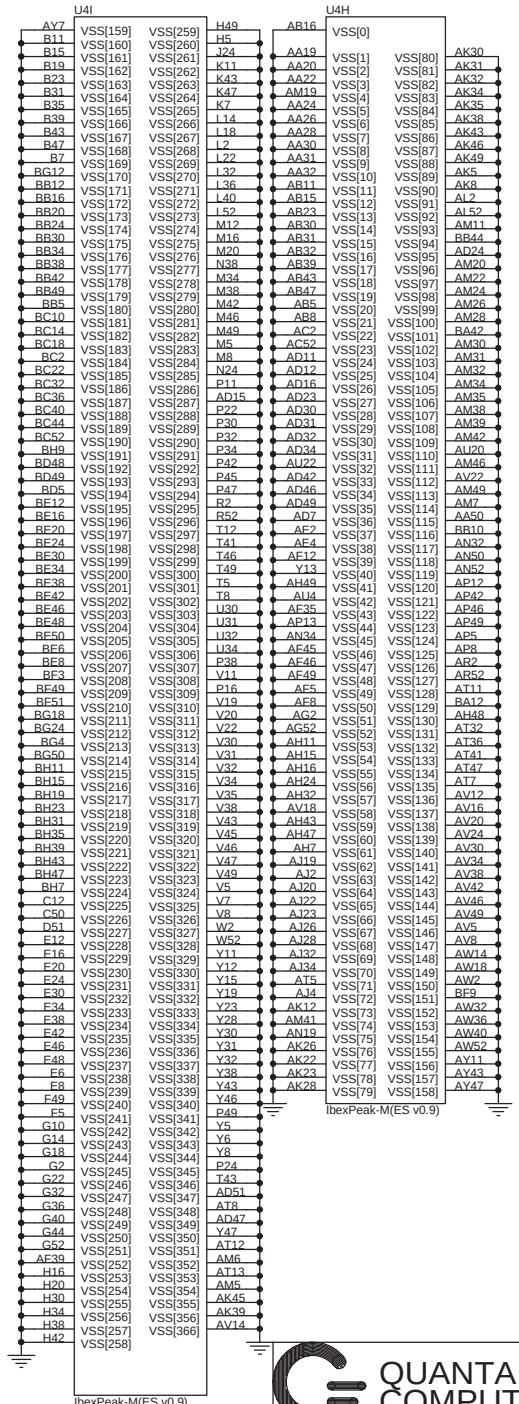

SV_SET_UP	High = Strong (Default)

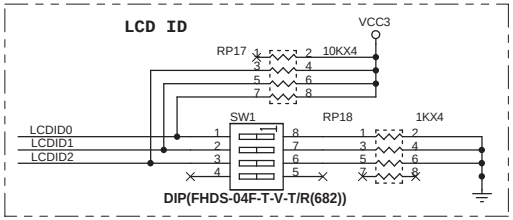

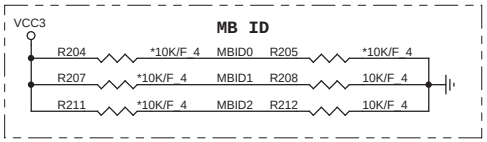

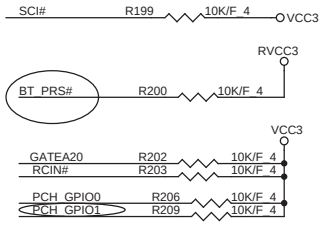

1. Level 1 Environment-related Substances Should NEVER be Used.
2. Purchase ink, paint, wire rods, and Molding resins only from the business Partners that Sony approves as Green Partners.

QUANTA COMPUTER

Title	PCH 4/5(GPIO)	
Size: Custom	Document Number: TW6 Main Board	Rev: 2A
Date: Monday, August 31, 2009	Sheet 12 of 33	

http://hobi-elektronika.net

IBEX PEAK-M (POWER)

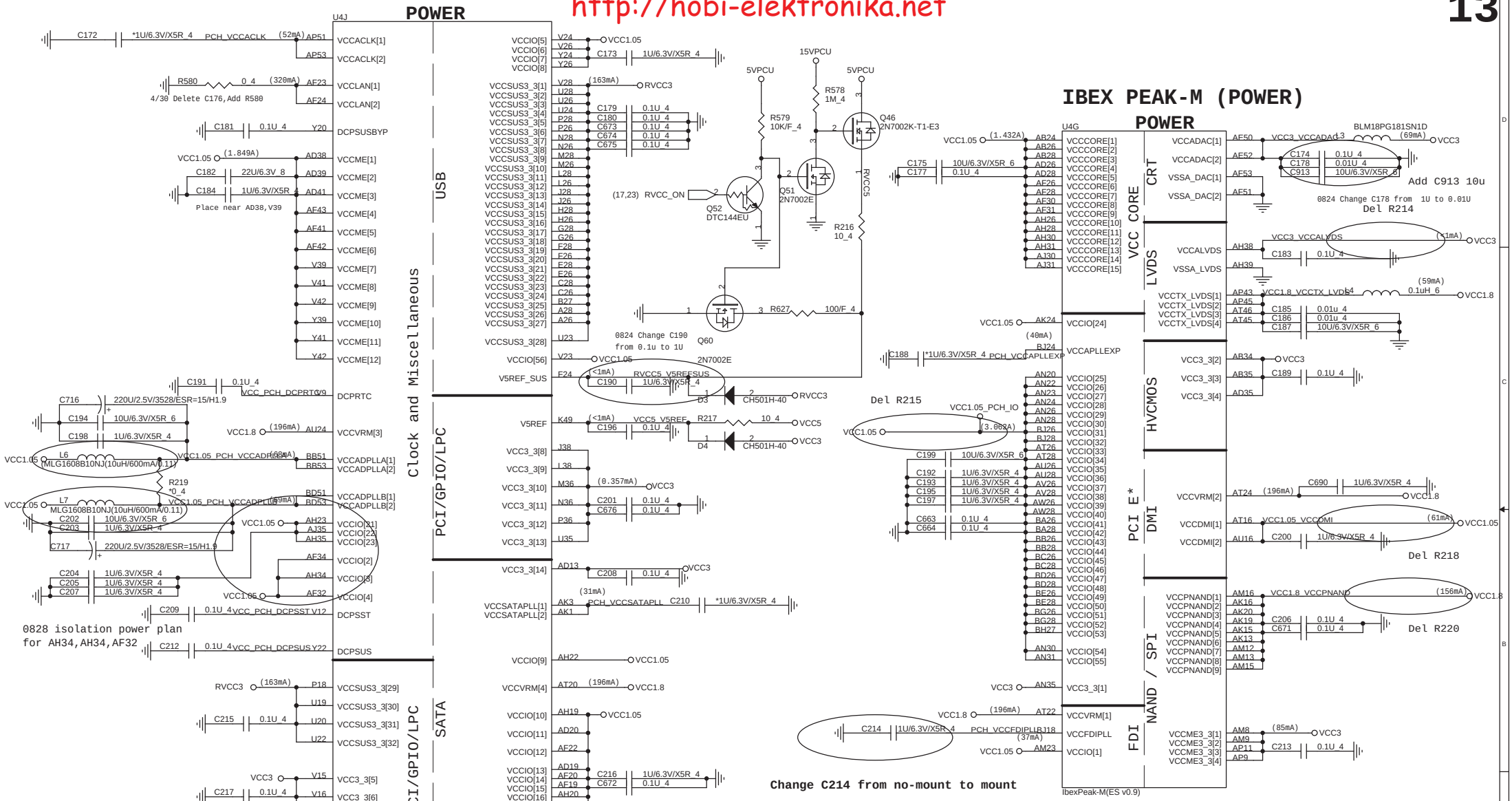

Enable/Disable internal VRM VCCVRM[1..4].

GPIO27: **High : Enable** (Internal pull High) VCCACLK[1..2], VCCSATAPLL[1..2], VCCAPLLEXP, VCCFDIPLL can remove L/C. Low : Disable

Straping VCC1.5 or VCC1.8

HDA_SYNC: High : VCC1.5; **Low : VCC1.8** (Internal pull Low)

QUANTA COMPUTER

Title	PCH 5/5(POWER)
Size	
Document Number	TW6 Main Board
Rev	2A
Date:	Monday, August 31, 2009
Sheet	13 of 33

0827A Add C918-C927 for S3 power reduction DG1.0

http://hobi-elektronika.net

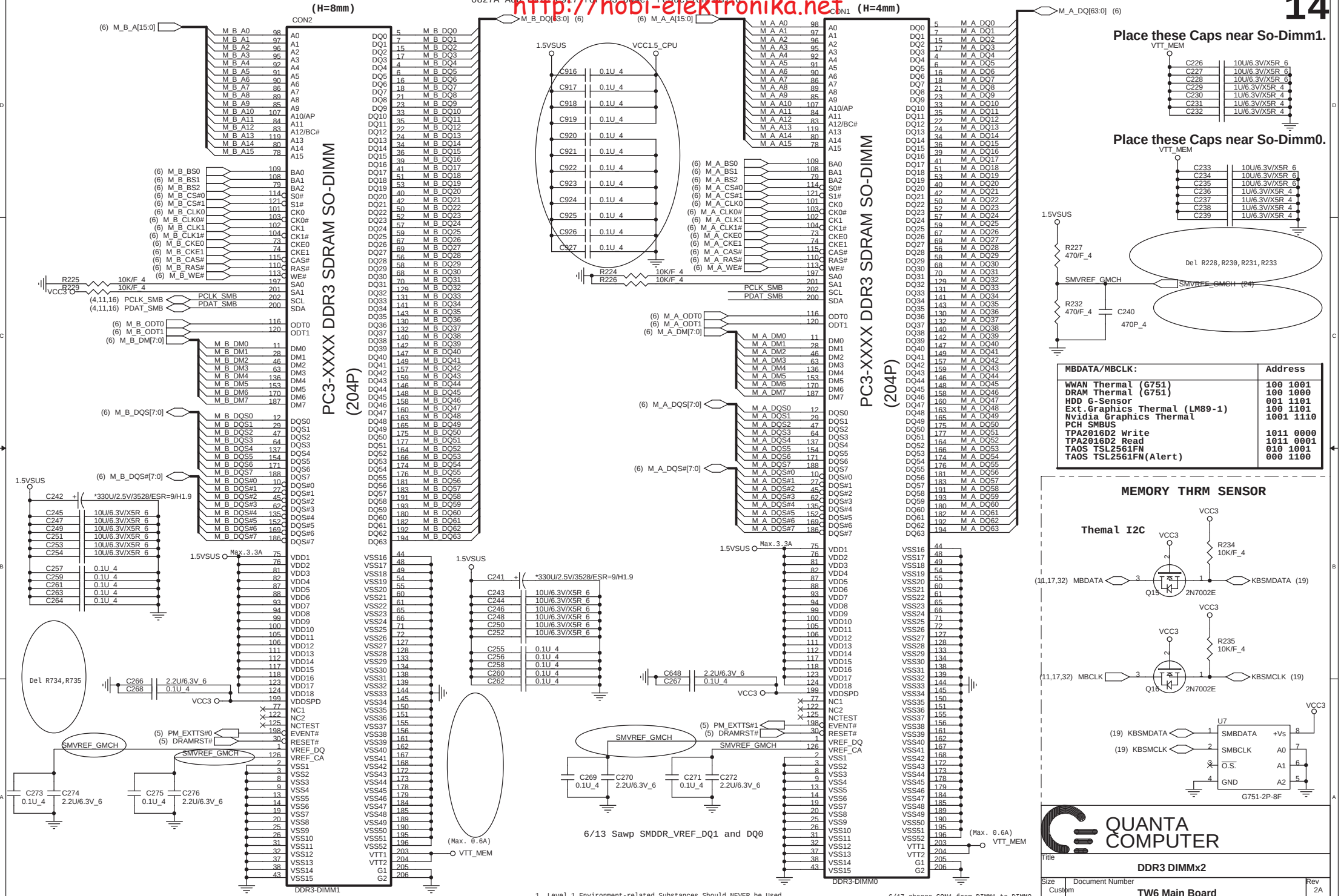

MBDATA/MBCLK:	Address
WWAN Thermal (G751)	100 1001
DRAM Thermal (G751)	100 1000
HDD G-Sensor	001 1101
Ext.Graphics Thermal (LM89-1)	100 1101
Nvidia Graphics Thermal	1001 1110
PCH SMBUS	
TPA2016D2 Write	1011 0000
TPA2016D2 Read	1011 0001
TAOS TSL2561FN	010 1001
TAOS TSL2561FN(Alert)	000 1100

1. Level 1 Environment-related Substances Should NEVER be Used.
2. Purchase ink, paint, wire rods, and Molding resins only from the business Partners that Sony approves as Green Partners.

http://hobi-elektronika.net

CRT

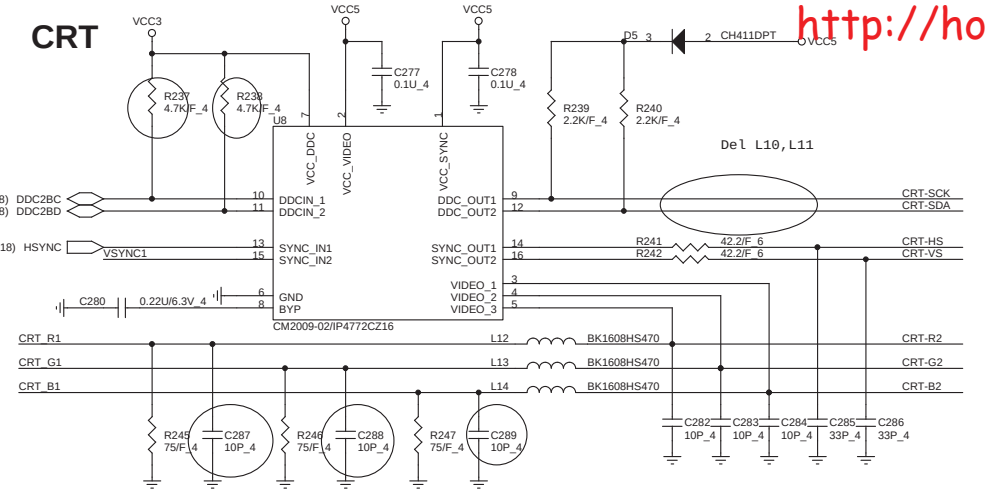

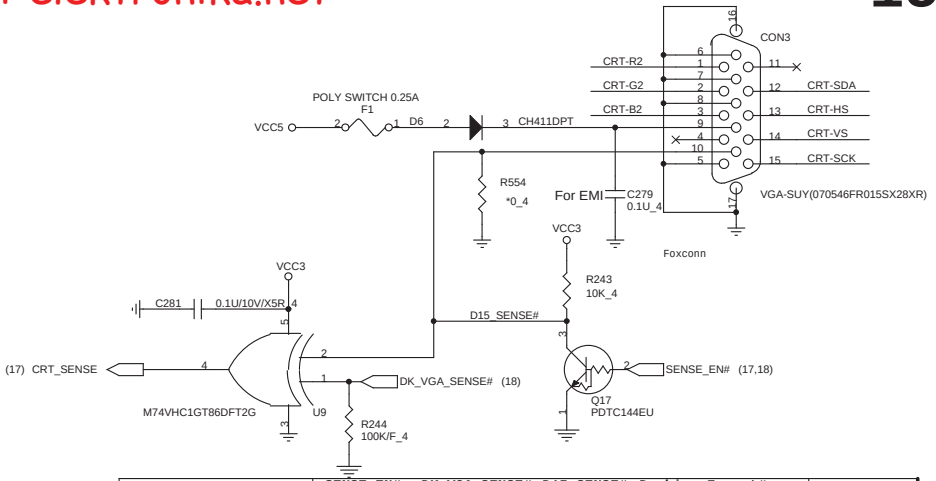

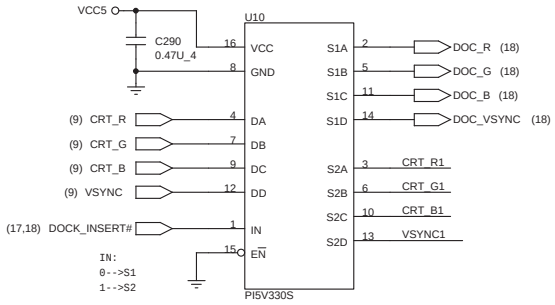

[EC Behavior]
CRT_SENSE: H=>L or L=>H detect which one is inserting
Docking_Insert#: H=>L detect which one is inserting
[CRT SW]
When Docking_Insert# is low switching RGB to Docking CRT
[SENSE_EN#]
Input for CRT pin10, EC assert to high when CRT insert[NEO Request]

	SENSE_EN#	DK_VGA_SENSE#	D15_SENSE#	Docking_Insert#	CRT_SENSE
Without Docking					
MB CRT no Plug	L	L	H	H	L
MB CRT Plug in	L	L	H => L	H	L => H
MB CRT plug out	L	L	L => H	H	H => L
With Docking					
All no Plug	L	L	H	L	L
MB CRT Plug in	L	L	H => L	L	L => H
MB CRT plug out	L	L	L => H	L	H => L
DOCK DVI Plug in	L	H => L	H	L	H => L
DOCK DVI Plug out	L	L => H	H	L	L => H
DOCK CRT Plug	L	H => L	H	L	H => L
DOCK CRT/DVI Plug	L	L => H	H	L	L => H

Display On

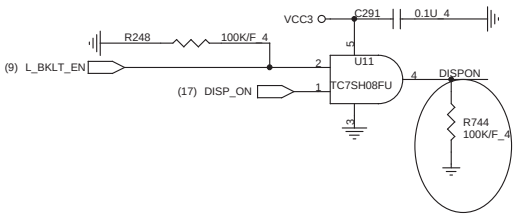

2CH LVDS

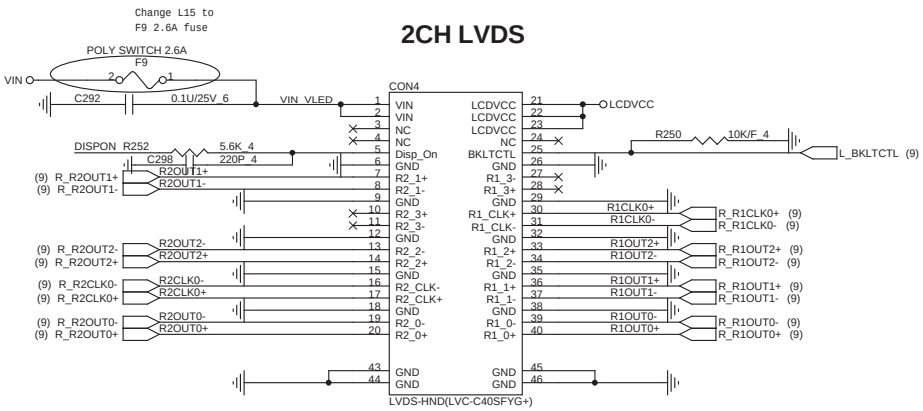

NB LVDS enable

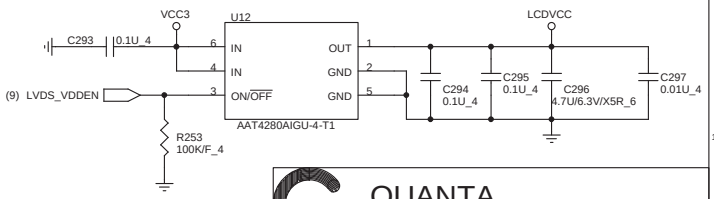

1.Level 1 Environment-related Substances Should NEVER be Used.
2.Purchase ink, paint, wire rods, and Molding resins only from the business Partners that Sony approves as Green Partners.

QUANTA COMPUTER

Title	CRT/LVDS	
Size: Custom	Document Number: TW6 Main Board	Rev: 2A
Date: Monday, August 31, 2009	Sheet 15 of 33	

http://hobi-elektronika.net

Mini PCI-E Card FOR WL

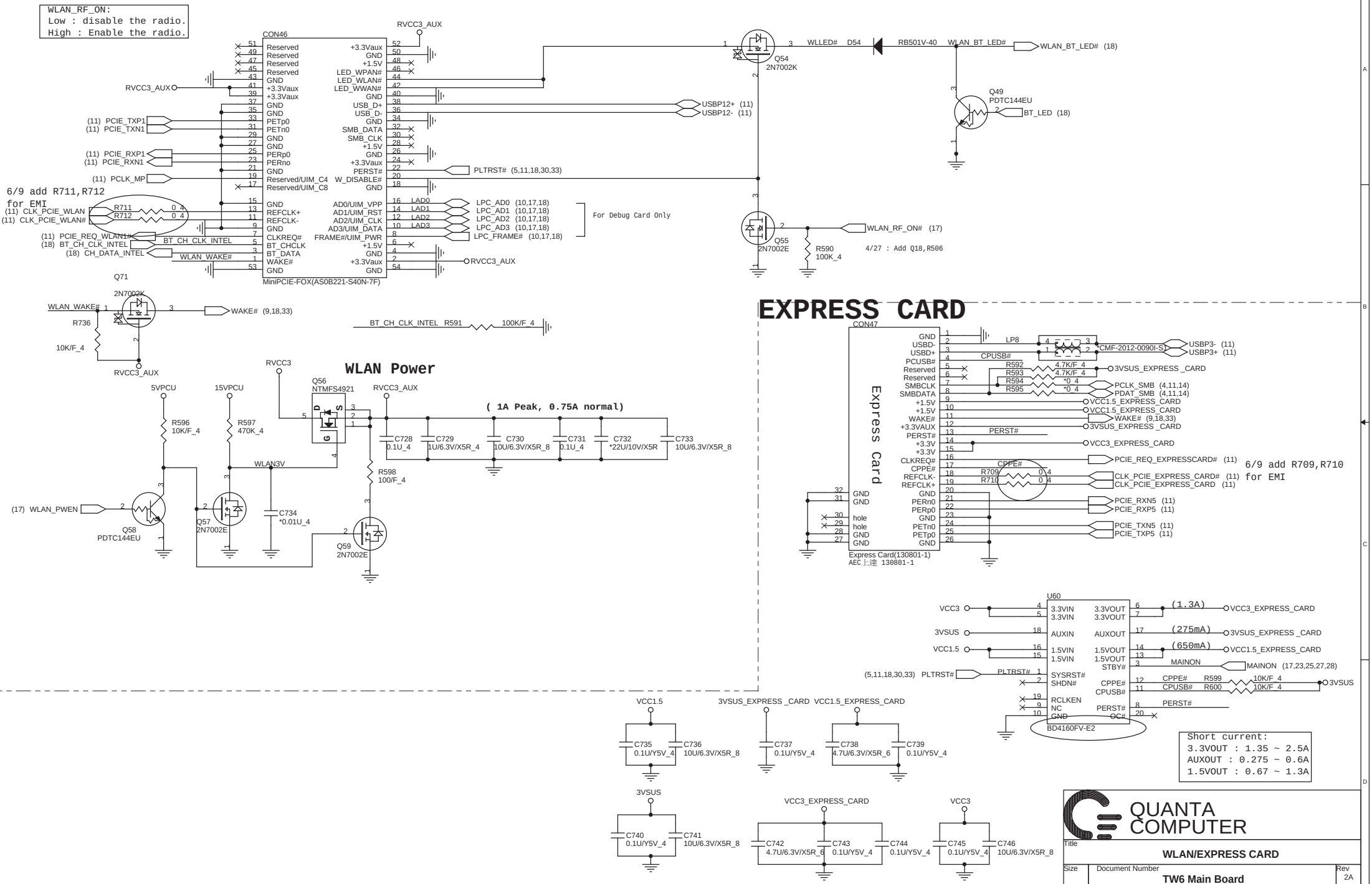

http://hobi-elektronika.net

I/O Address		
BADDR1-0	Index	Data
* 1 0	2E	2F
1 1	4E	4F
0 0	(HCFGBAH, HCFGBAL)	(HCFGBAH, HCFGBAL)+1
0 1	XOR-TREE TEST	

SHMB: SHBM(If = 0 Enable share host BIOS memory)

DOCK_RST# : BADDR0

T?: BADDR1

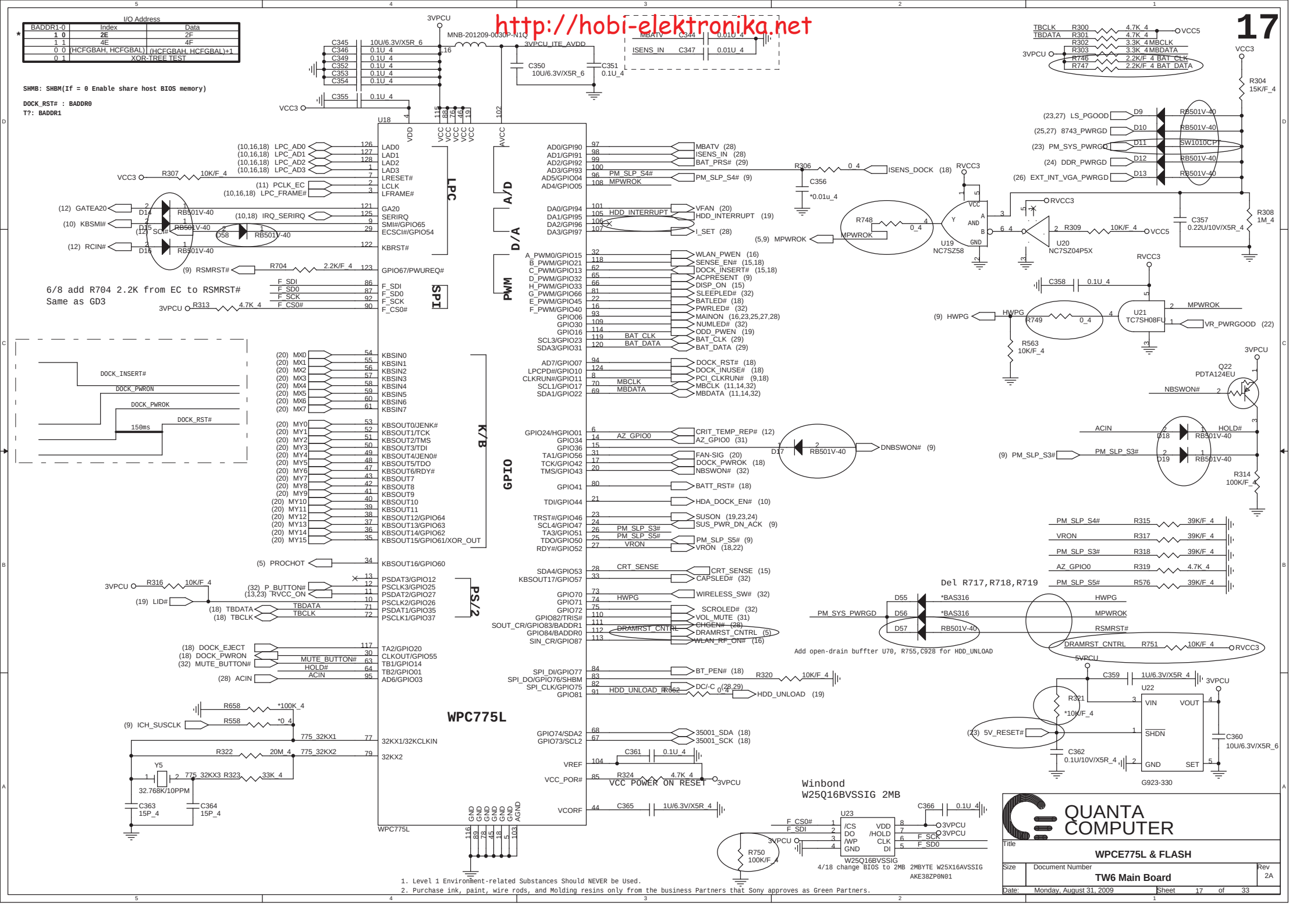

1. Level 1 Environment-related Substances Should NEVER be Used.
2. Purchase ink, paint, wire rods, and Molding resins only from the business Partners that Sony approves as Green Partners.

http://hobi-elektronika.net

Docking

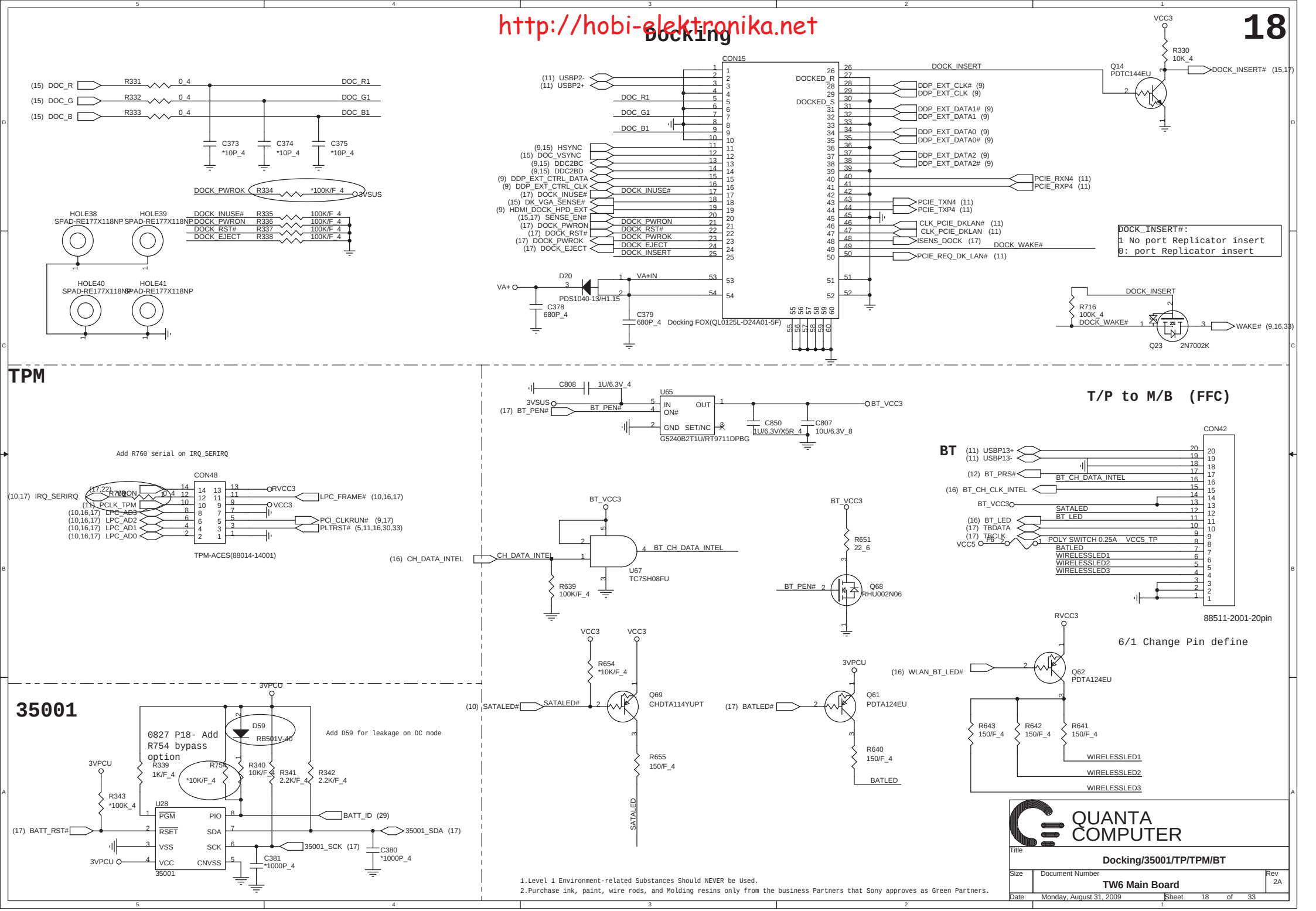

TPM

1.Level 1 Environment-related Substances Should NEVER be Used.
2.Purchase ink, paint, wire rods, and Molding resins only from the business Partners that Sony approves as Green Partners.

QUANTA COMPUTER

Title	Docking/35001/TP/TPM/BT	
Size	Document Number: TW6 Main Board	Rev 2A
Date: Monday, August 31, 2009	Sheet 18 of 33	

ODD CONNECTOR

http://hobi-elektronika.net

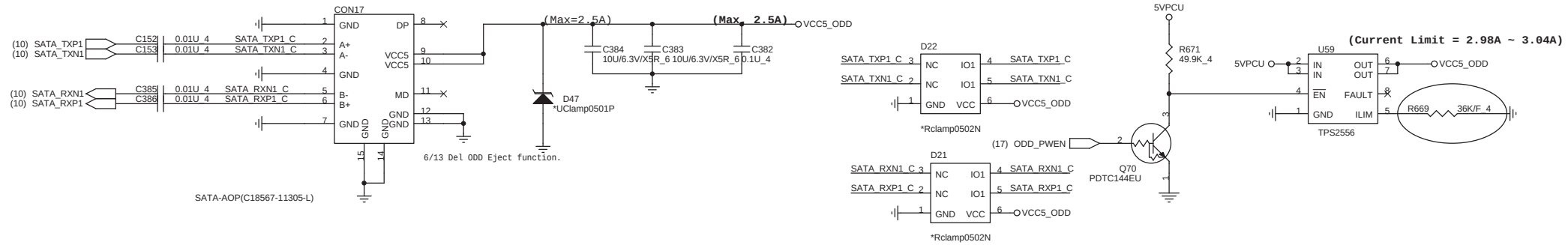

HDD Repeater and CONNECTOR

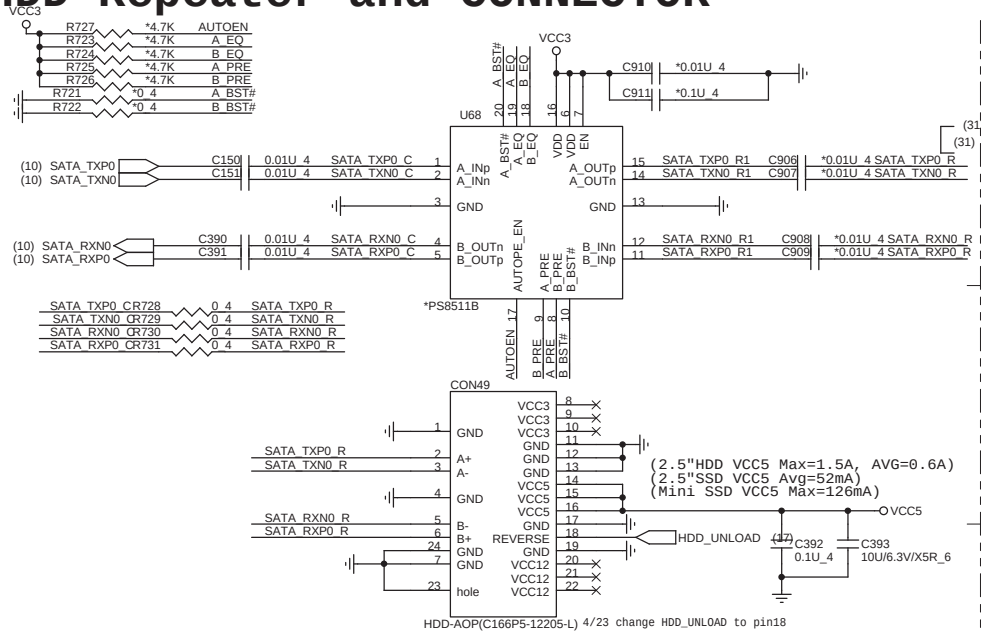

Camera

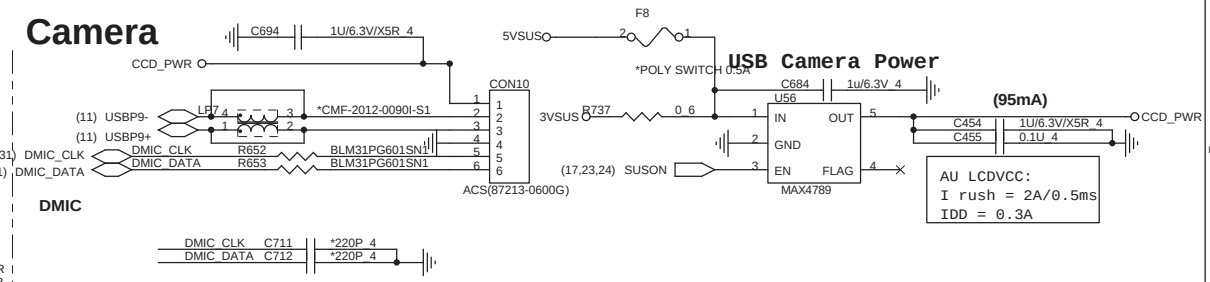

Magnetic Lid Switch

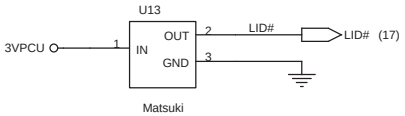

Power Plan Capacitor

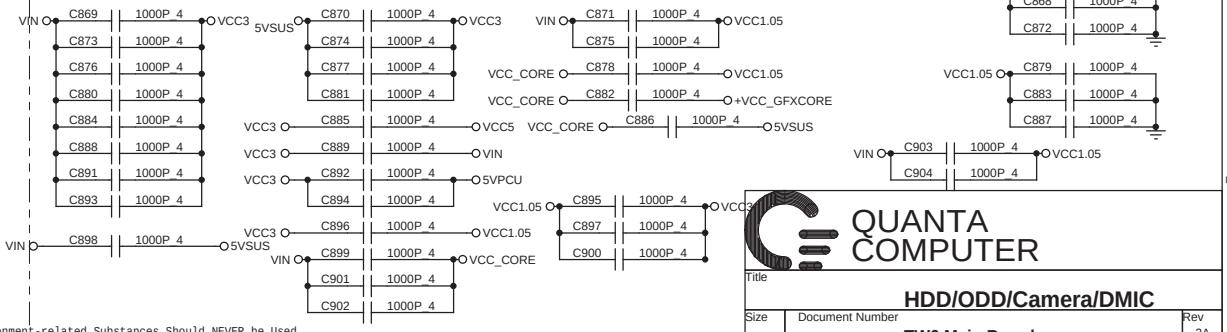

6/9 Add Power Plan Capacitor

HDD PROTECT

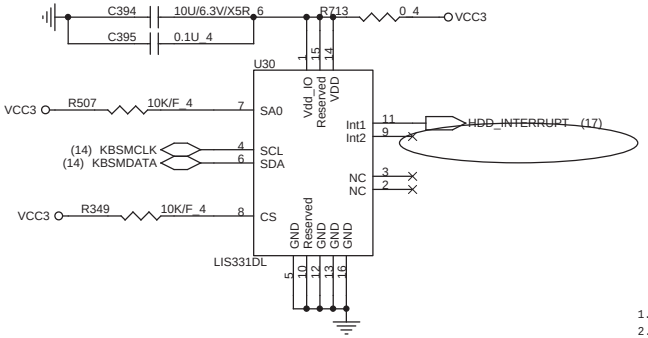

1.Level 1 Environment-related Substances Should NEVER be Used.
2.Purchase ink, paint, wire rods, and Molding resins only from the business Partners that Sony approves as Green Partners.

QUANTA COMPUTER

Title	HDD/ODD/Camera/DMIC	
Size	Document Number: TW6 Main Board	Rev 2A
Date: Tuesday, September 01, 2009	Sheet 19 of 33	

http://hobi-elektronika.net

TID number: no certified

KEYBOARD

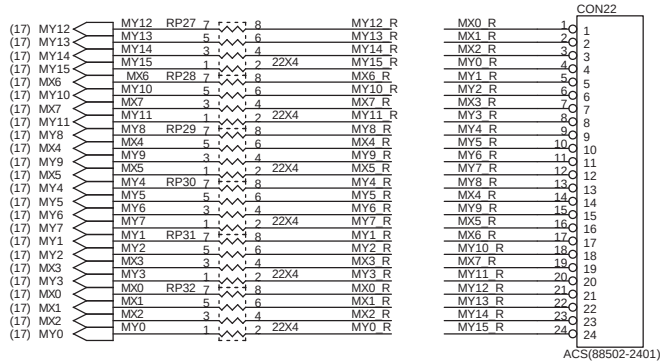

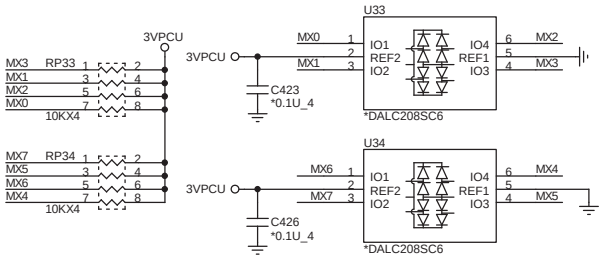

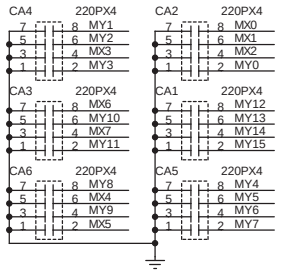

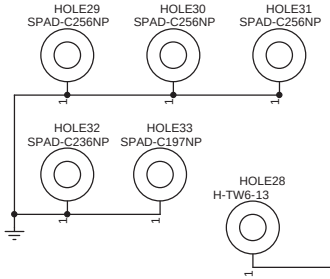

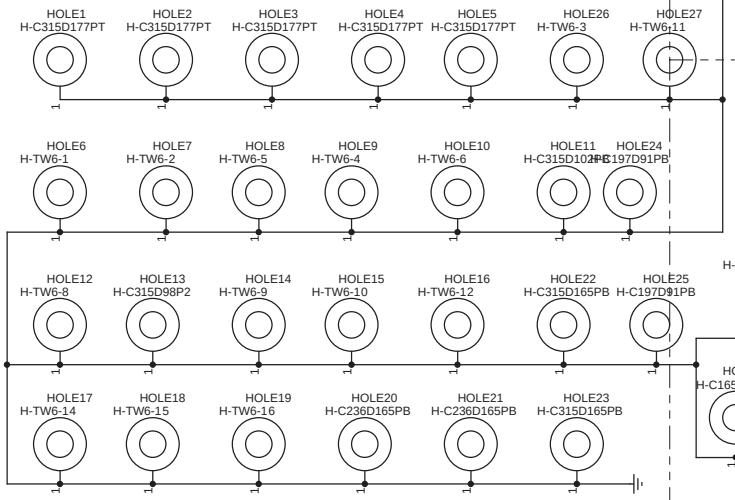

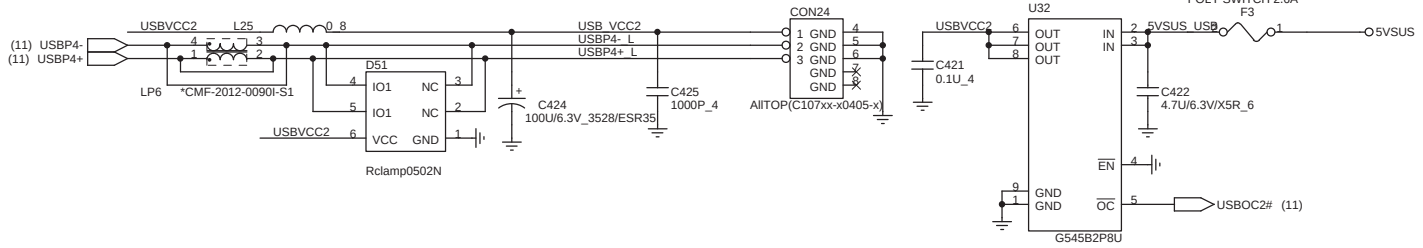

MB to USB BOARD

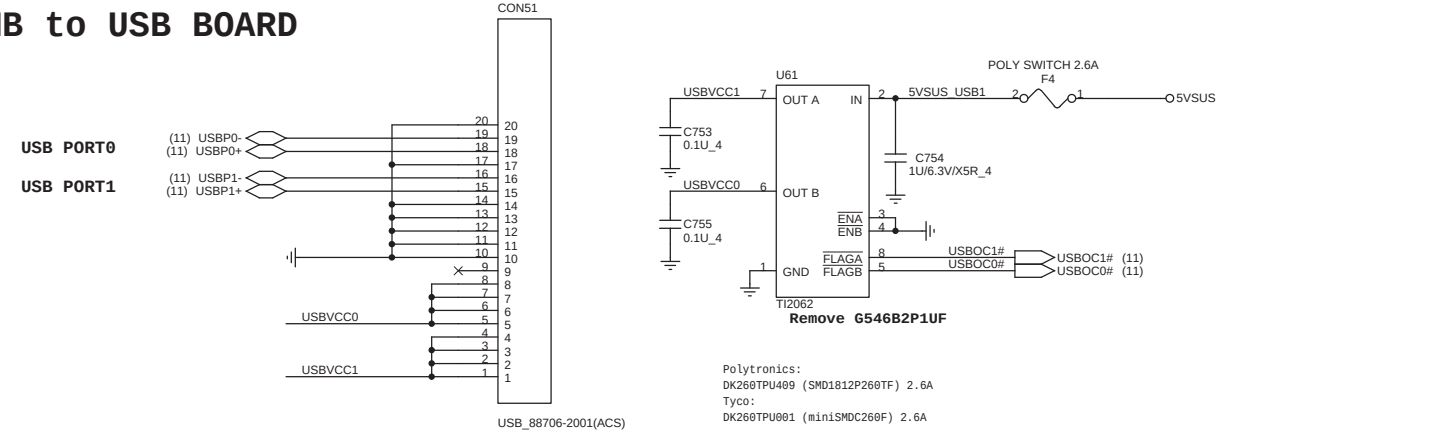

Polytronics:
DK260TPU409 (SMD1812P260TF) 2.6A
Tyco:
DK260TPU001 (miniSMDC260F) 2.6A

FAN

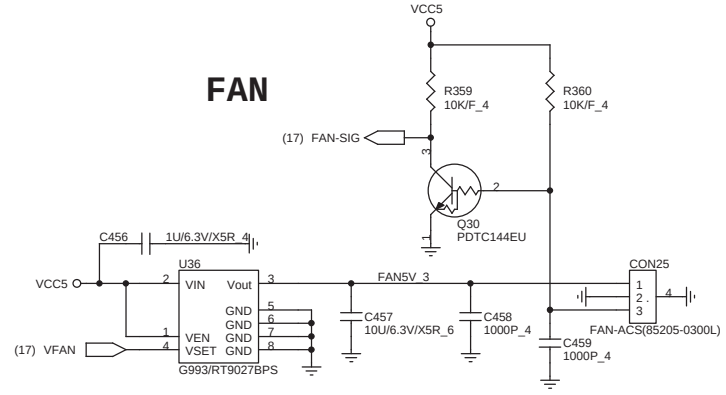

1.Level 1 Environment-related Substances Should NEVER be Used.
2.Purchase ink, paint, wire rods, and Molding resins only from the business Partners that Sony approves as Green Partners.

QUANTA COMPUTER

Title	KB/USB/FAN/Reset	
Size	Document Number: TW6 Main Board	Rev 1A
Date: Tuesday, September 01, 2009	Sheet 20 of 33	

http://hobi-elektronika.net

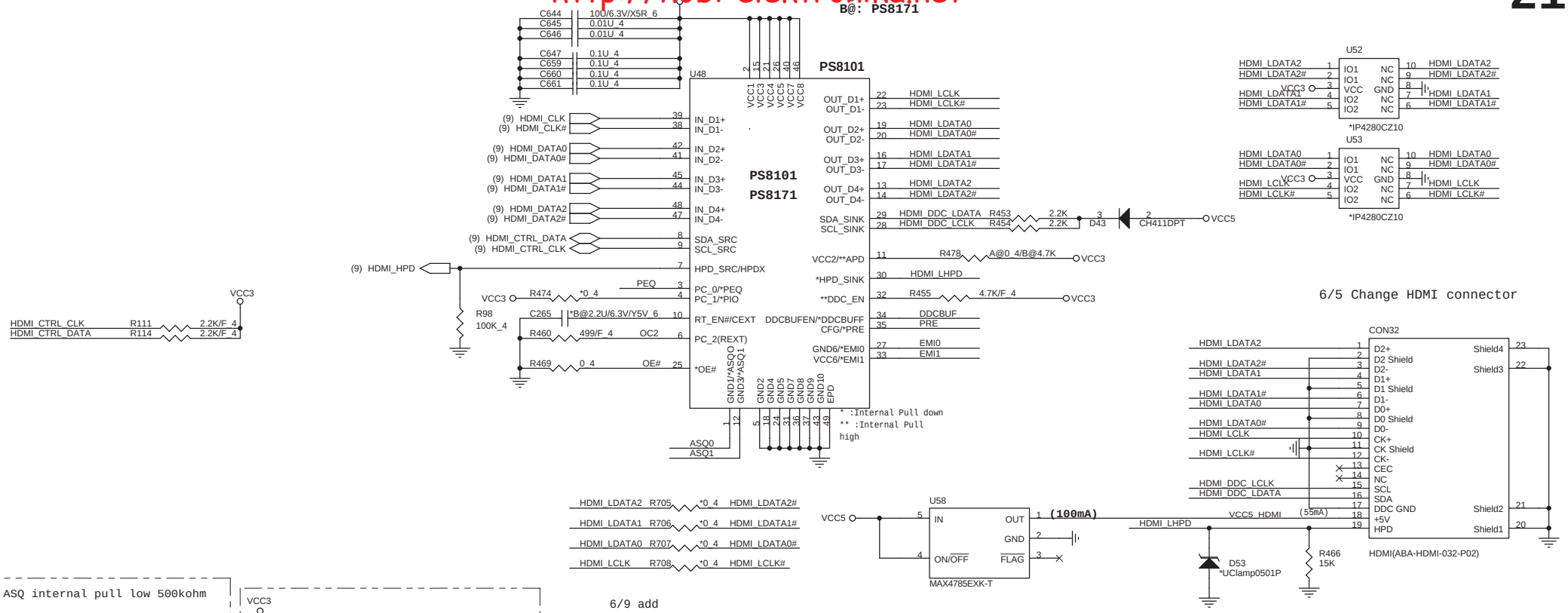

PS8171 EMI		
EMI0	EMI1	EMI reduction and filter setting
L	L	
L	H	※ no EMI reduction
H	L	
MID	MID	

PS8171 DDCBUF (DDCBUF internal pull low 500kohm)		
PIN34	LEVEL	Description
DDCBUF	HIGH	Active DDC buffer enable;Setting 1
	MID	Active DDC buffer enable;Setting 2
	LOW	※ No DDC active buffer,passive DDC level shifting

PC1	PC0	EQUALIZATION
0	0	8dB
0	1	※ 4dB
1	0	12dB
1	1	0dB

PS8171 EQ		
PIN3	LEVEL	EQ
PEQ	HIGH	7dB
	MID	※ 2dB
	LOW	4dB

PS8171 SWING		
PIN35	LEVEL	dB
PRE	HIGH	1.2dB
	MID	2dB
	LOW	※ 0dB

PRE internal pull low 500kohm

PS8171 HPDX		
PIN4	LEVEL	HPDX Output
PIO	L	※ HPD_Sink = HPD
	H	HPD=HPD_SINK#

PS8171 APD (ASQ internal pull low 500kohm)		
PIN11	LEVEL	Description
APD	HIGH	Automatic power down enable
	MID	
	LOW	Automatic power down disable

PS8171 ASQ (ASQ internal pull low 500kohm)		
PIN1 PIN12	LEVEL	Automatic Squelch
ASQ[1,0]	HL	※ No automatic squelch
	LL	Level=100mVpp,default timer
	LH	Level=150mVpp,default timer
	HH	Level=200mVpp,default timer
	ML	Level=120mVpp,extended timer
	MH	Level=100mVpp,extended timer
	LM	Level=80mVpp,extended timer
	HM	Reserved
	MM	Reserved

1.Level 1 Environment-related Substances Should NEVER be Used.
2.Purchase ink, paint, wire rods, and Molding resins only from the business Partners that Sony approves as Green Partners.

QUANTA COMPUTER

Title: HDMI Conn/Level shift

Size | Document Number: TW6 Main Board | Rev 1A

Date: Monday, August 31, 2009 | Sheet 21 of 33

http://hobi-elektronika.net

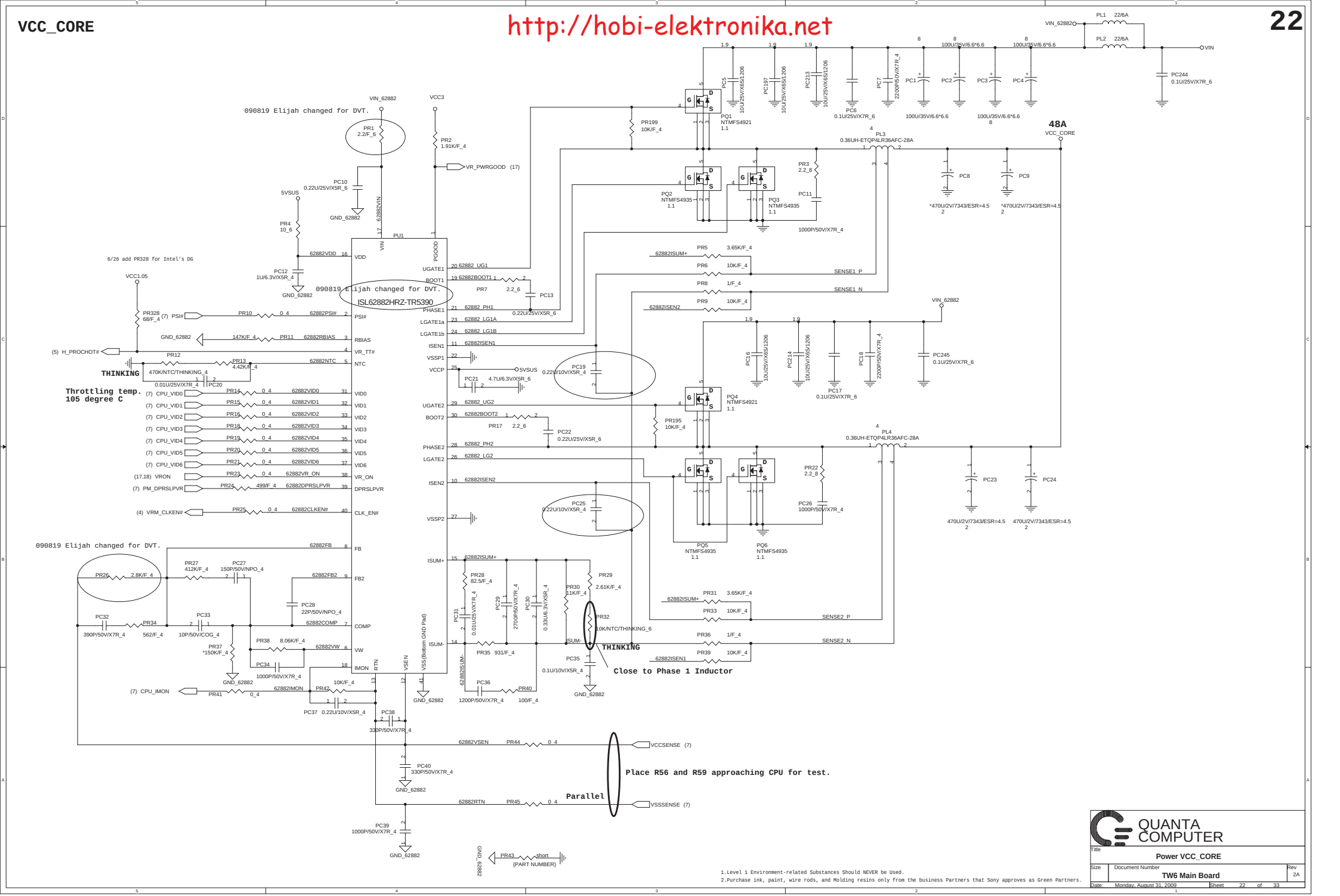

1.Level 1 Environment-related Substances Should NEVER be Used.
2.Purchase ink, paint, wire rods, and Molding resins only from the business Partners that Sony approves as Green Partners.

QUANTA COMPUTER

Title	Power VCC_CORE	
Size	Document Number: TW6 Main Board	Rev 2A
Date: Monday, August 31, 2009	Sheet 22 of 33	

http://hobi-elektronika.net

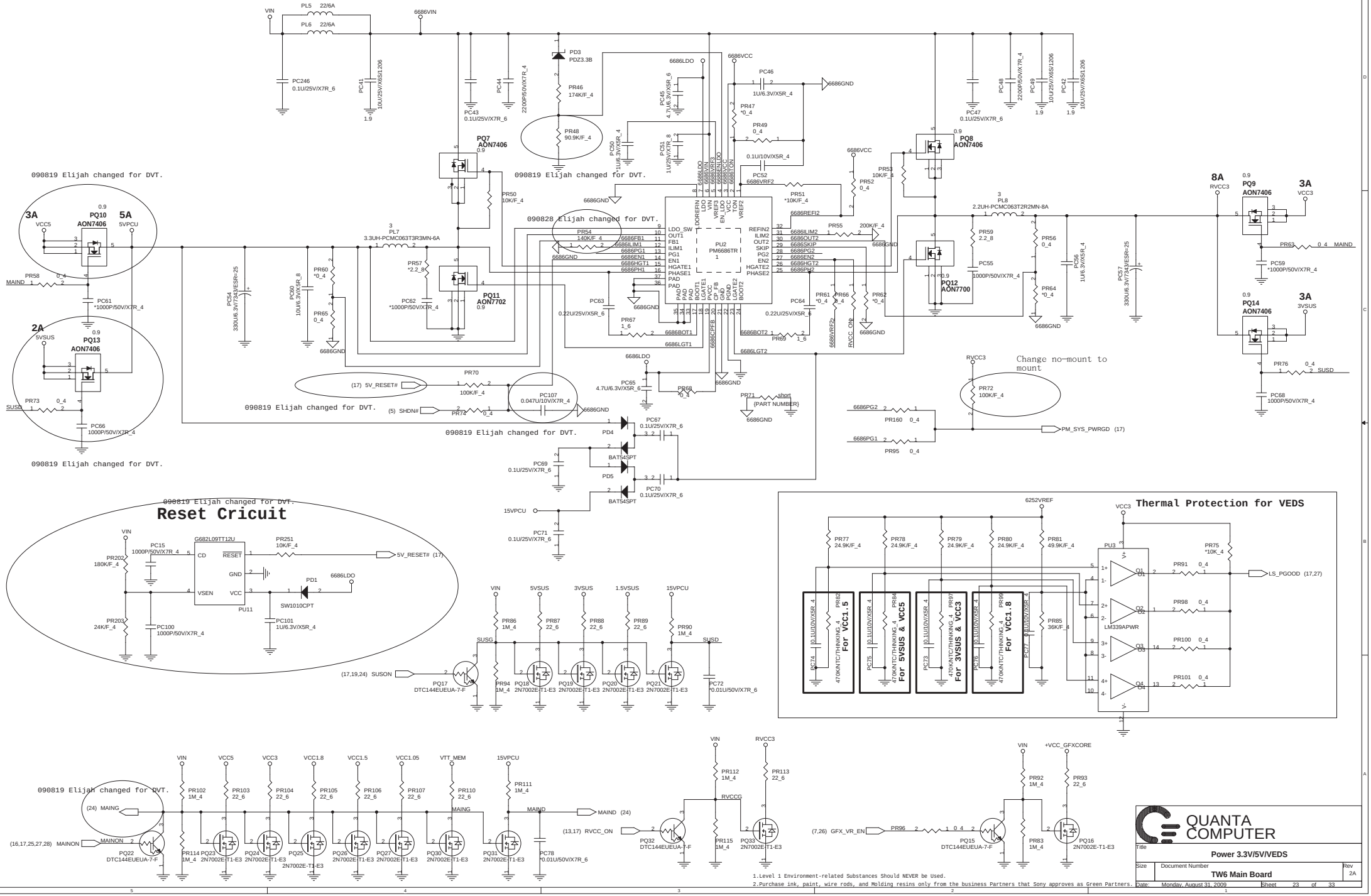

1.Level 1 Environment-related Substances Should NEVER be Used.
2.Purchase ink, paint, wire rods, and Molding resins only from the business Partners that Sony approves as Green Partners.

QUANTA COMPUTER

Title	Power 3.3V/5V/VEDS
Size	
Document Number	TW6 Main Board
Rev	2A
Date:	Monday, August 31, 2009
Sheet	23 of 33

1.5VSUS/VTT_MEM/VCC1.5

http://hobi-elektronika.net

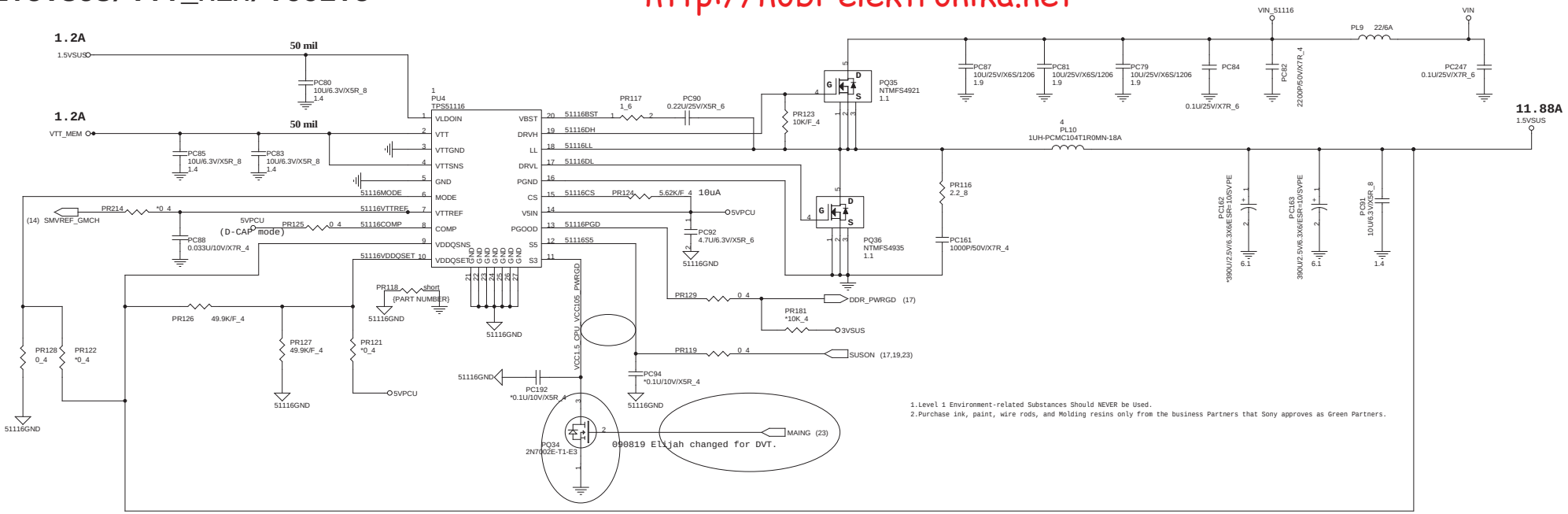

1.Level 1 Environment-related Substances Should NEVER be Used.
2.Purchase ink, paint, wire rods, and Molding resins only from the business Partners that Sony approves as Green Partners.

VCC1.5_CPU_VCC105_PWRGD

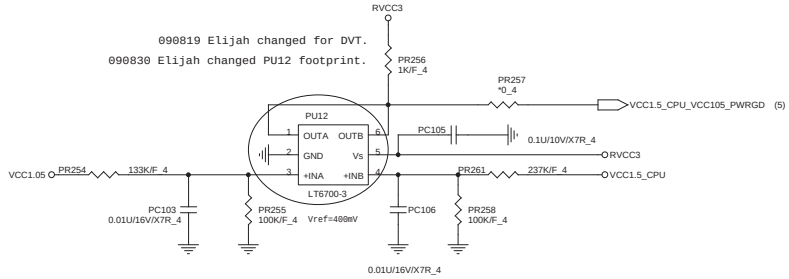

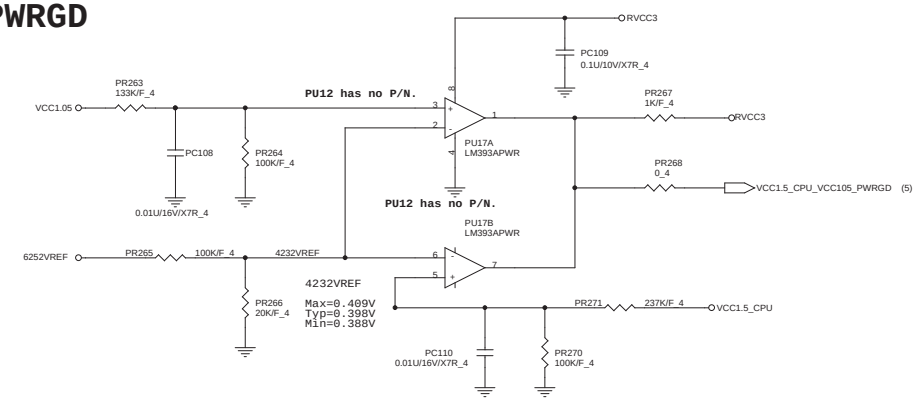

VCC1.5

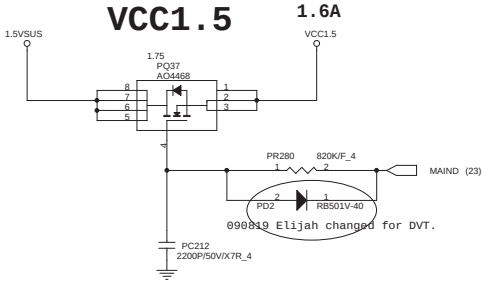

VCC1.5_CPU

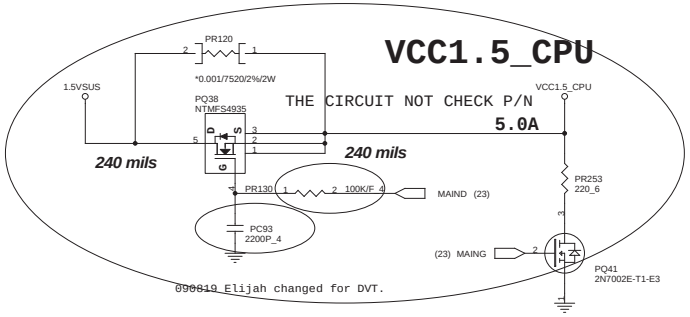

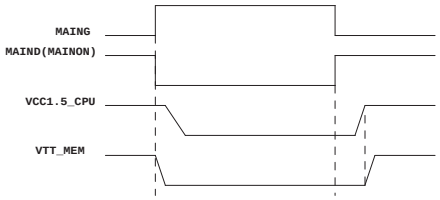

QUANTA COMPUTER

Title	Power 1.5VSUS/VTT_MEM/VCC1.5	
Size	Document Number: TW6 Main Board	Rev 2A
Date: Monday, August 31, 2009	Sheet 24 of 33	

http://hobi-elektronika.net

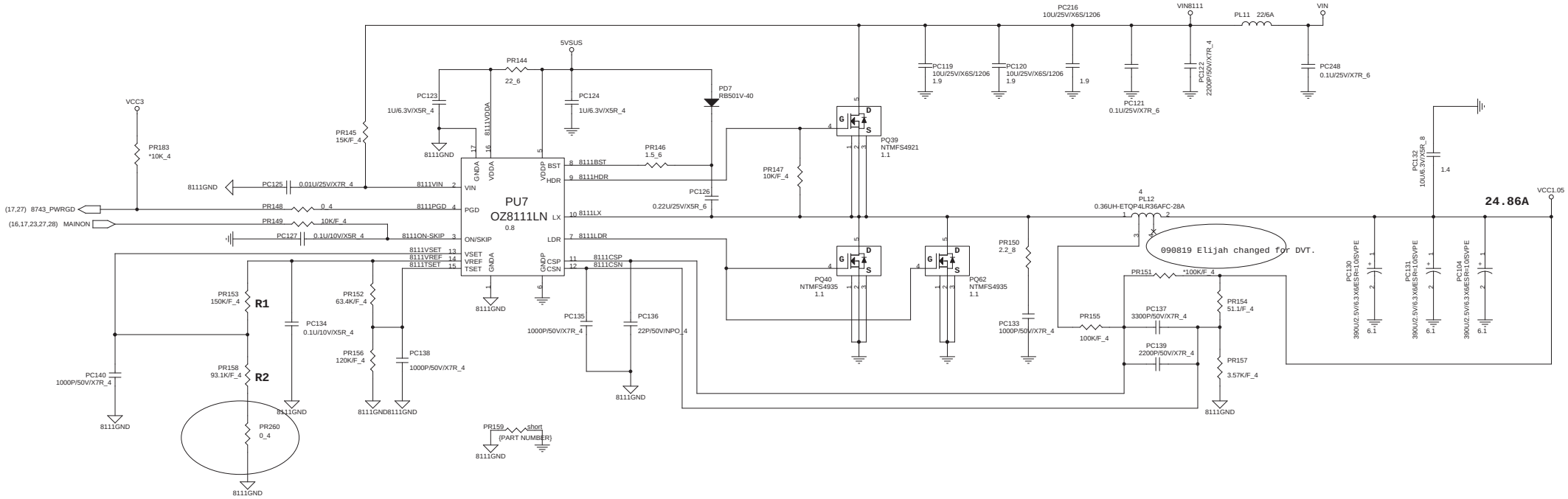

090828 Elijah added PR260 for DVT function.

Vout=2.75*(R2/(R1+R2))

1.Level 1 Environment-related Substances Should NEVER be Used.
2.Purchase ink, paint, wire rods, and Molding resins only from the business Partners that Sony approves as Green Partners.

QUANTA COMPUTER

Title	Power VCC1.05	
Size	Document Number: TW6 Main Board	Rev 2A
Date: Monday, August 31, 2009	Sheet 25 of 33	

http://hobi-elektronika.net

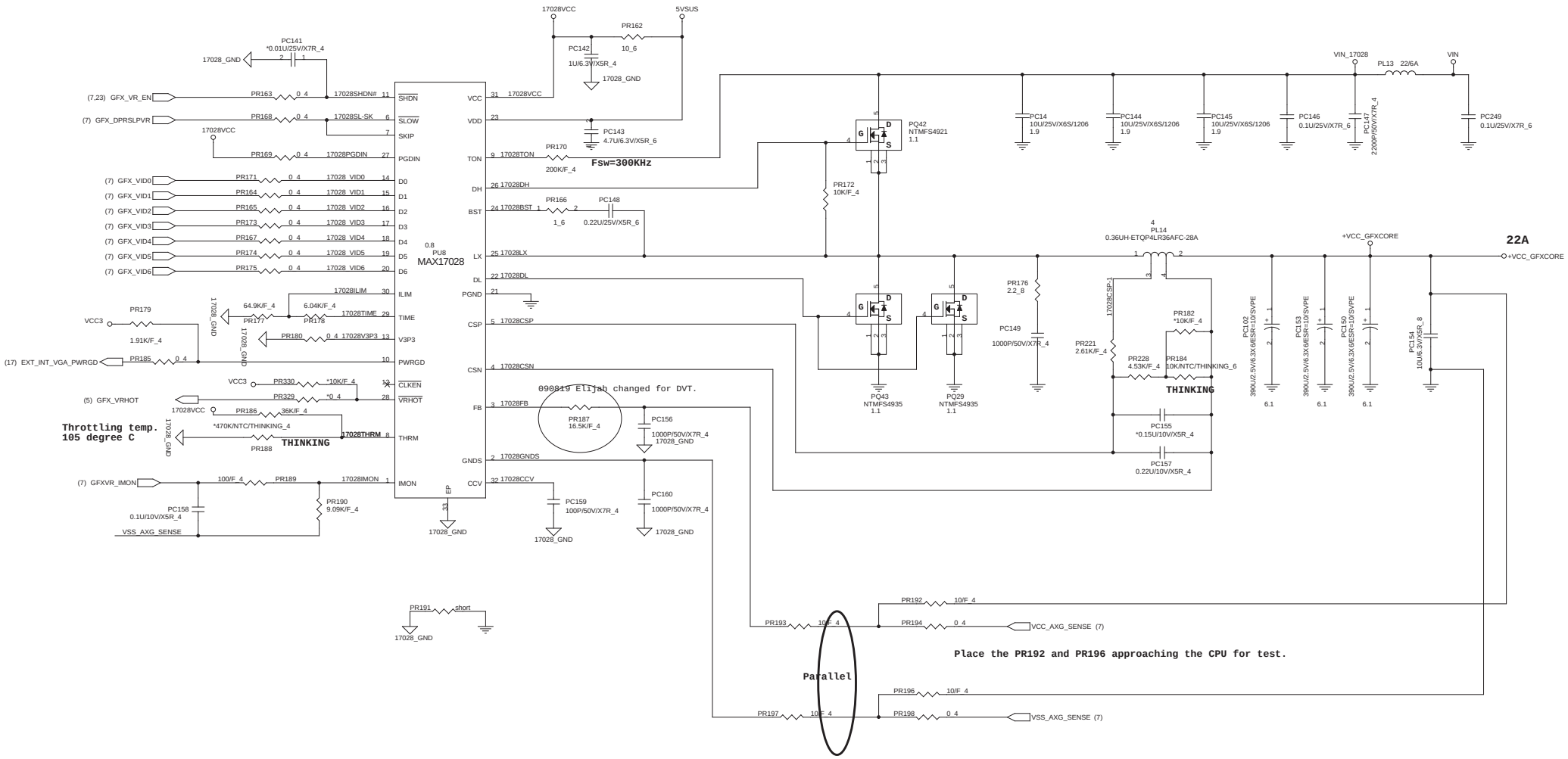

QUANTA COMPUTER

Title	Power VCC_GFXCORE	
Size	Document Number: TW6 Main Board	Rev 2A
Date: Monday, August 31, 2009	Sheet 26 of 33	

1.Level 1 Environment-related Substances Should NEVER be Used.
2.Purchase ink, paint, wire rods, and Molding resins only from the business Partners that Sony approves as Green Partners.

http://hobi-elektronika.net

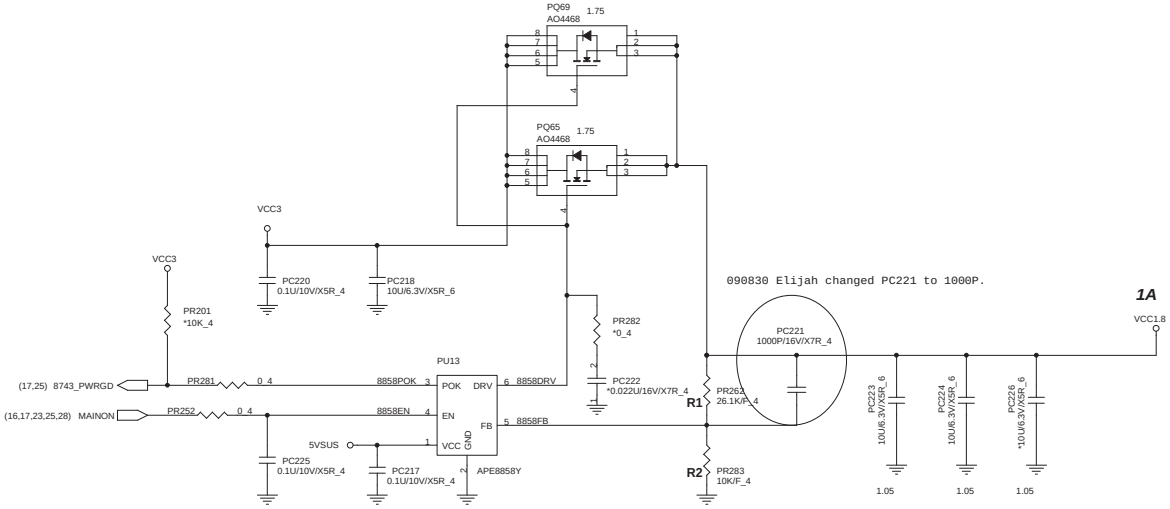

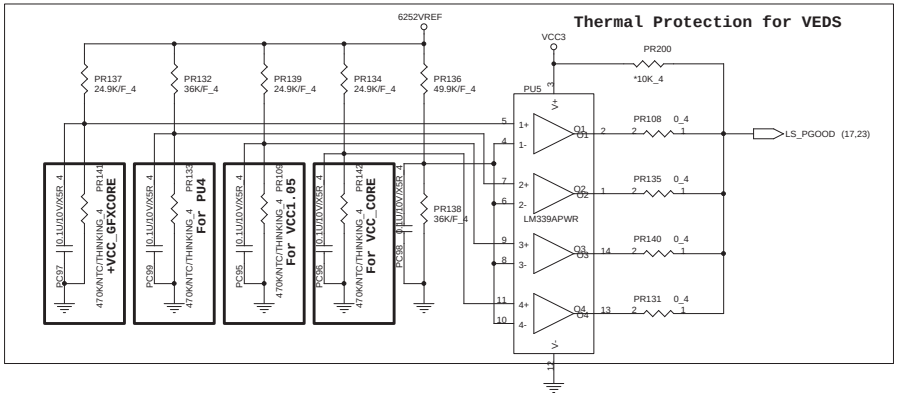

1.Level 1 Environment-related Substances Should NEVER be Used.
2.Purchase ink, paint, wire rods, and Molding resins only from the business Partners that Sony approves as Green Partners.

QUANTA COMPUTER

Title	Power VCC1.8/VEDS	
Size	Document Number: TW6 Main Board	Rev 2A
Date: Monday, August 31, 2009	Sheet 27 of 33	

http://hobi-elektronika.net

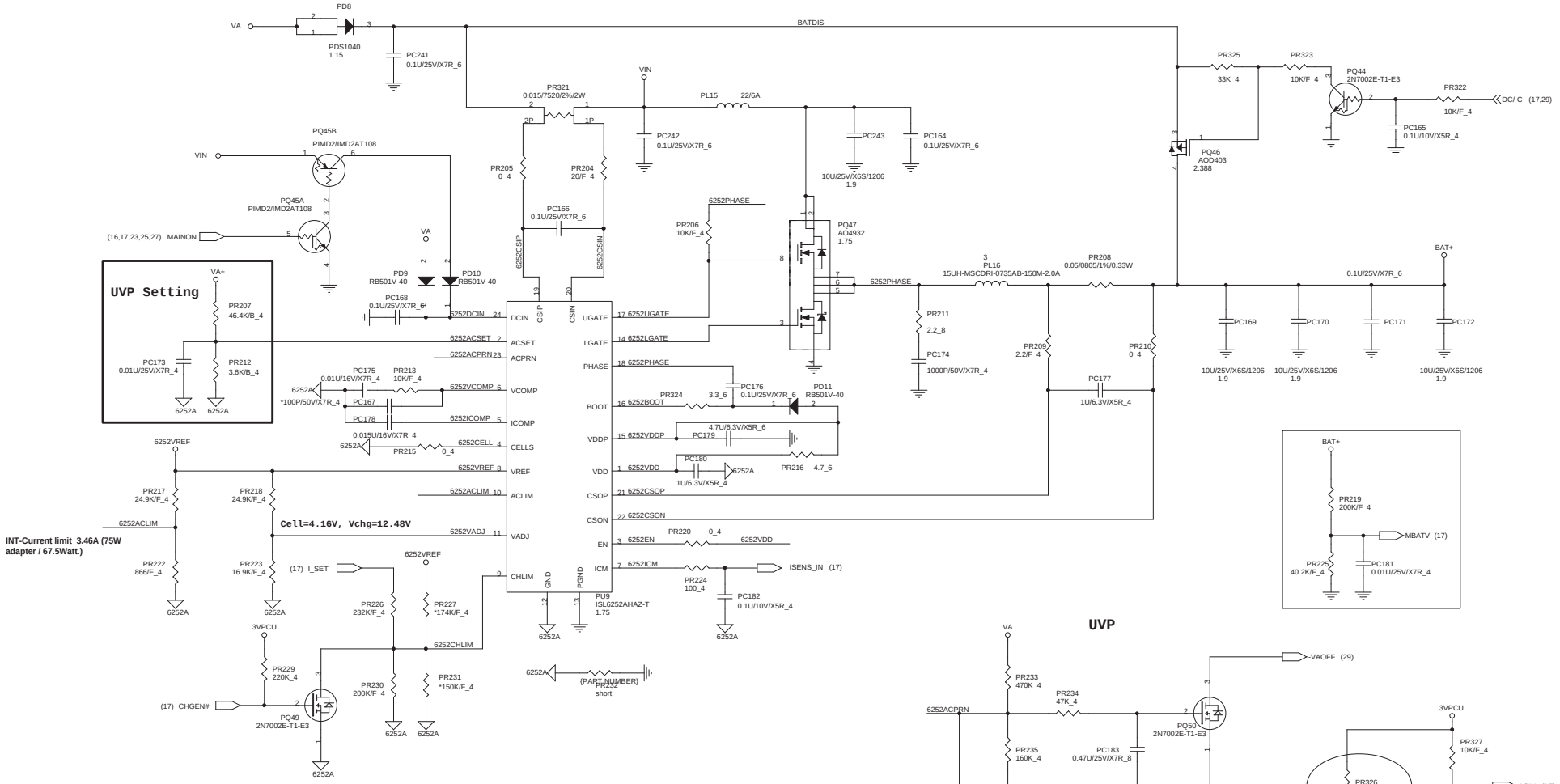

Charging Current Setting

1. I_SET=3.30V, VCHLIM=1.51V, Charge Current=1.5A
2. I_SET=1.76V, VCHLIM=0.81V, Charge Current=0.8A
3. I_SET=0.66V, VCHLIM=0.30V, Charge Current=0.3A
4. I_SET=0V, VCHLIM=0V, Charge Current=0A

1.Level 1 Environment-related Substances Should NEVER be Used.
2.Purchase ink, paint, wire rods, and Molding resins only from the business Partners that Sony approves as Green Partners.

QUANTA COMPUTER

Title	Power Charger	
Size	Document Number: TW6 Main Board	Rev 2A
Date: Monday, August 31, 2009	Sheet 28 of 33	

Ada in/BAT in/UL

http://hobi-elektronika.net

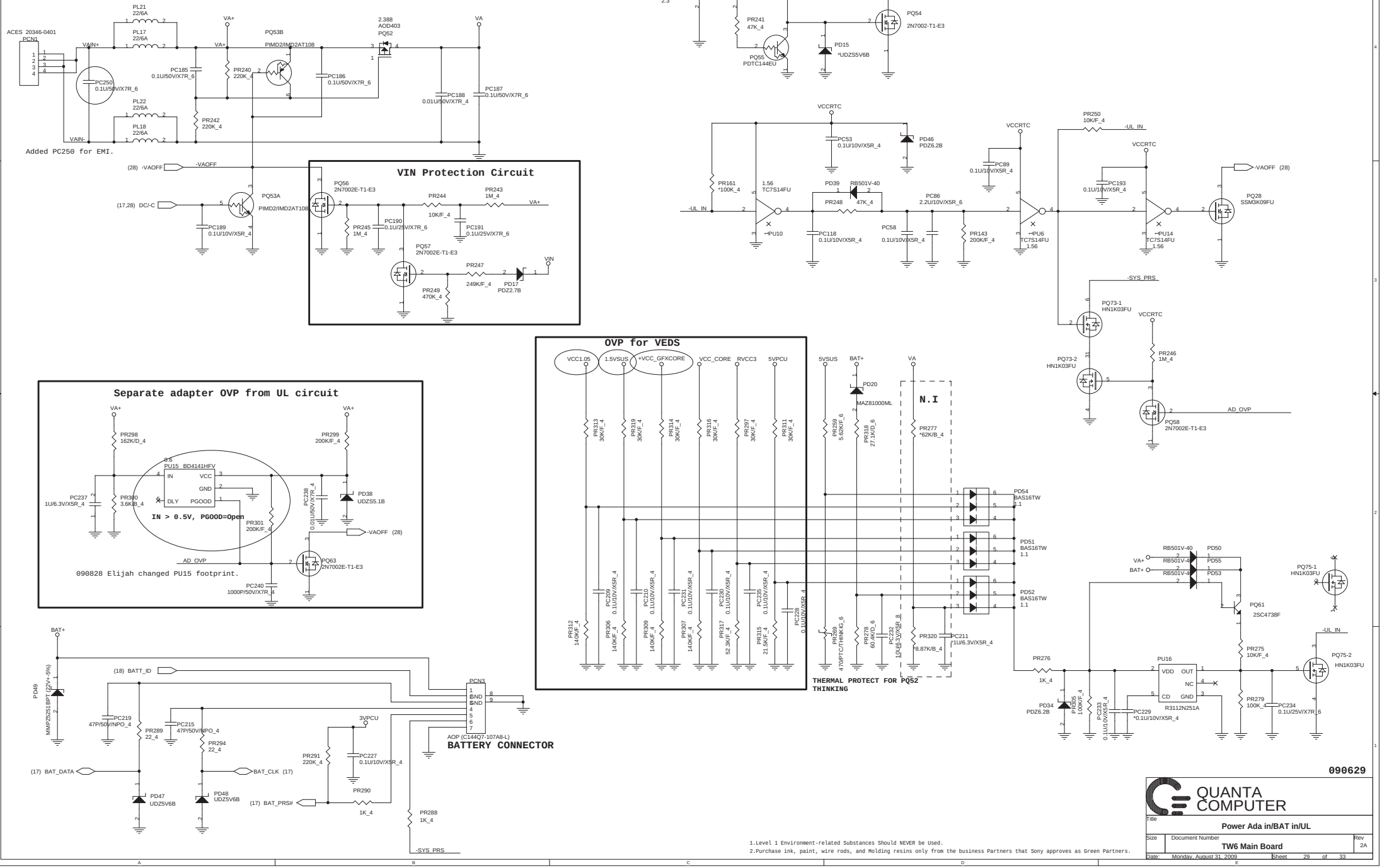

1.Level 1 Environment-related Substances Should NEVER be Used.
2.Purchase ink, paint, wire rods, and Molding resins only from the business Partners that Sony approves as Green Partners.

090629

QUANTA COMPUTER

Title	Power Ada in/BAT in/UL	
Size	Document Number: TW6 Main Board	Rev 2A
Date: Monday, August 31, 2009	Sheet 29 of 33	

http://hobi-elektronika.net

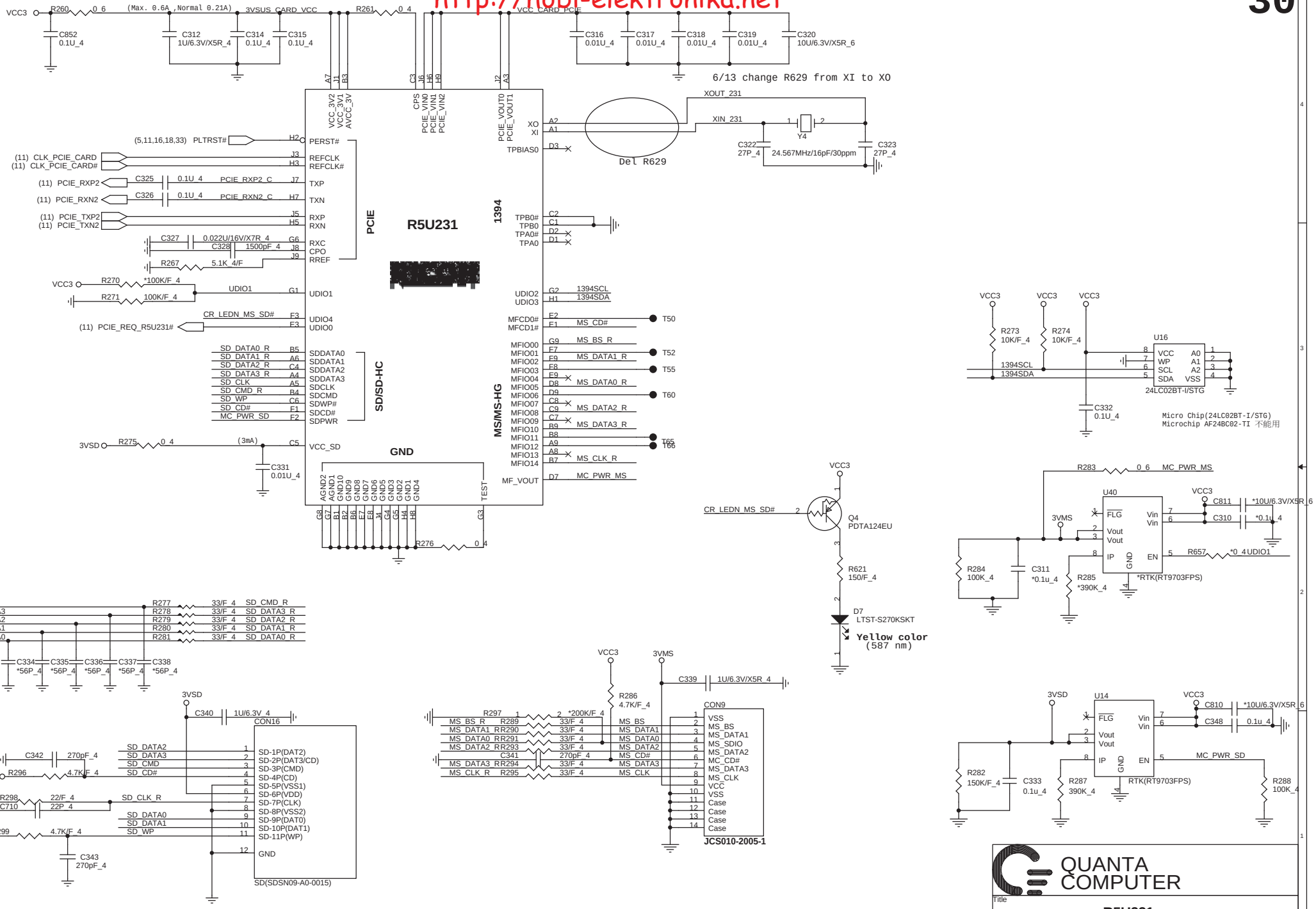

1.Level 1 Environment-related Substances Should NEVER be Used.
2.Purchase ink, paint, wire rods, and Molding resins only from the business Partners that Sony approves as Green Partners.

QUANTA COMPUTER

Title	R5U231	
Size	Document Number: TW6 Main Board	Rev 2A
Date: Tuesday, September 01, 2009	Sheet 30 of 33	

http://hobi-elektronika.net

A@:ALC269
B@:ALC275

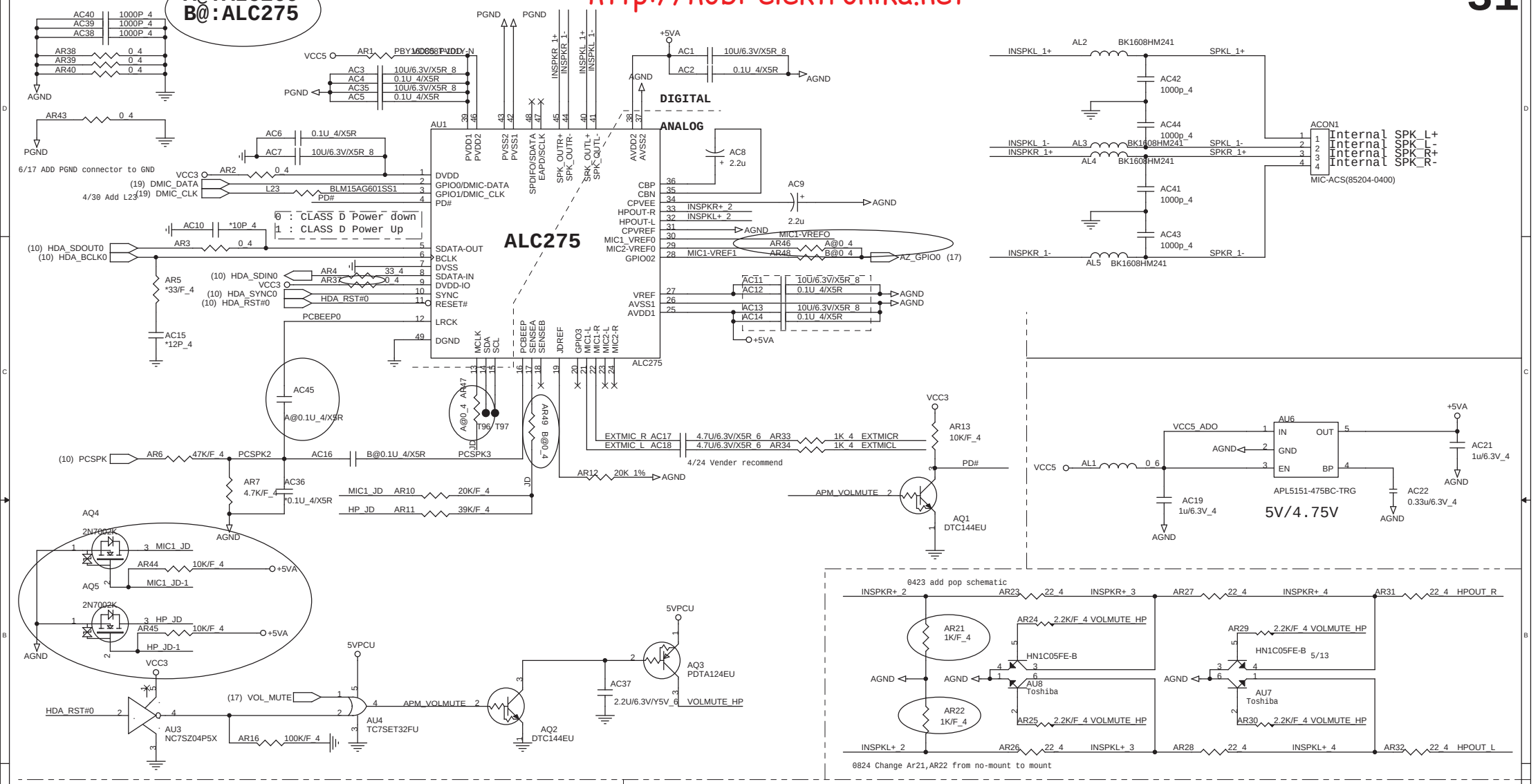

MB to LED Board

http://hobi-elektronika.net

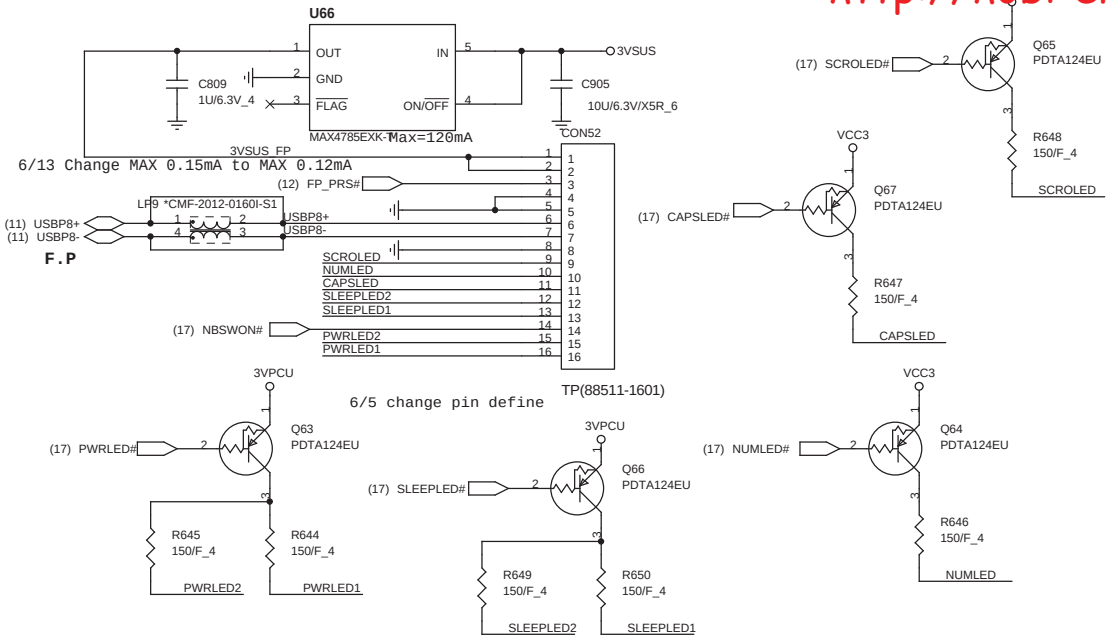

MDC V1.5

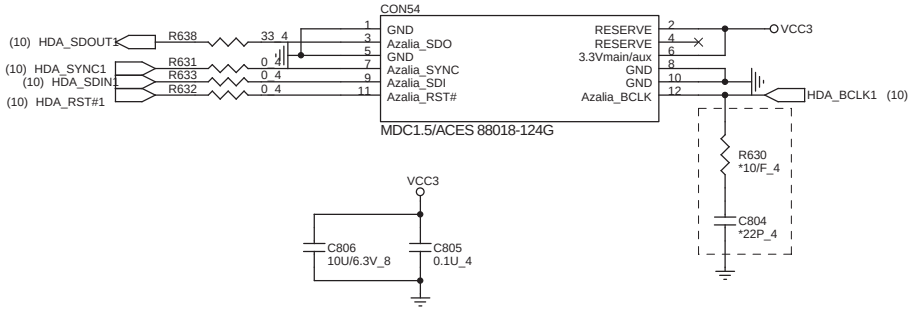

M/B to Button Board(FFC)

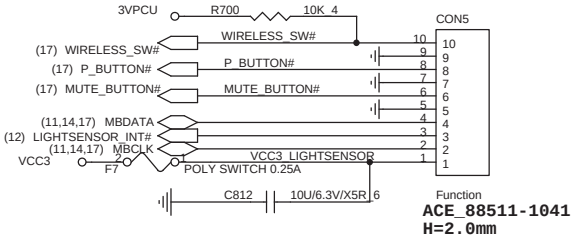

QUANTA COMPUTER

Title	LED/Button_B FFC/FeliCa	
Size	Document Number: TW6 Main Board	Rev 1A
Date: Monday, August 31, 2009	Sheet 32 of 33	

http://hobi-elektronika.net

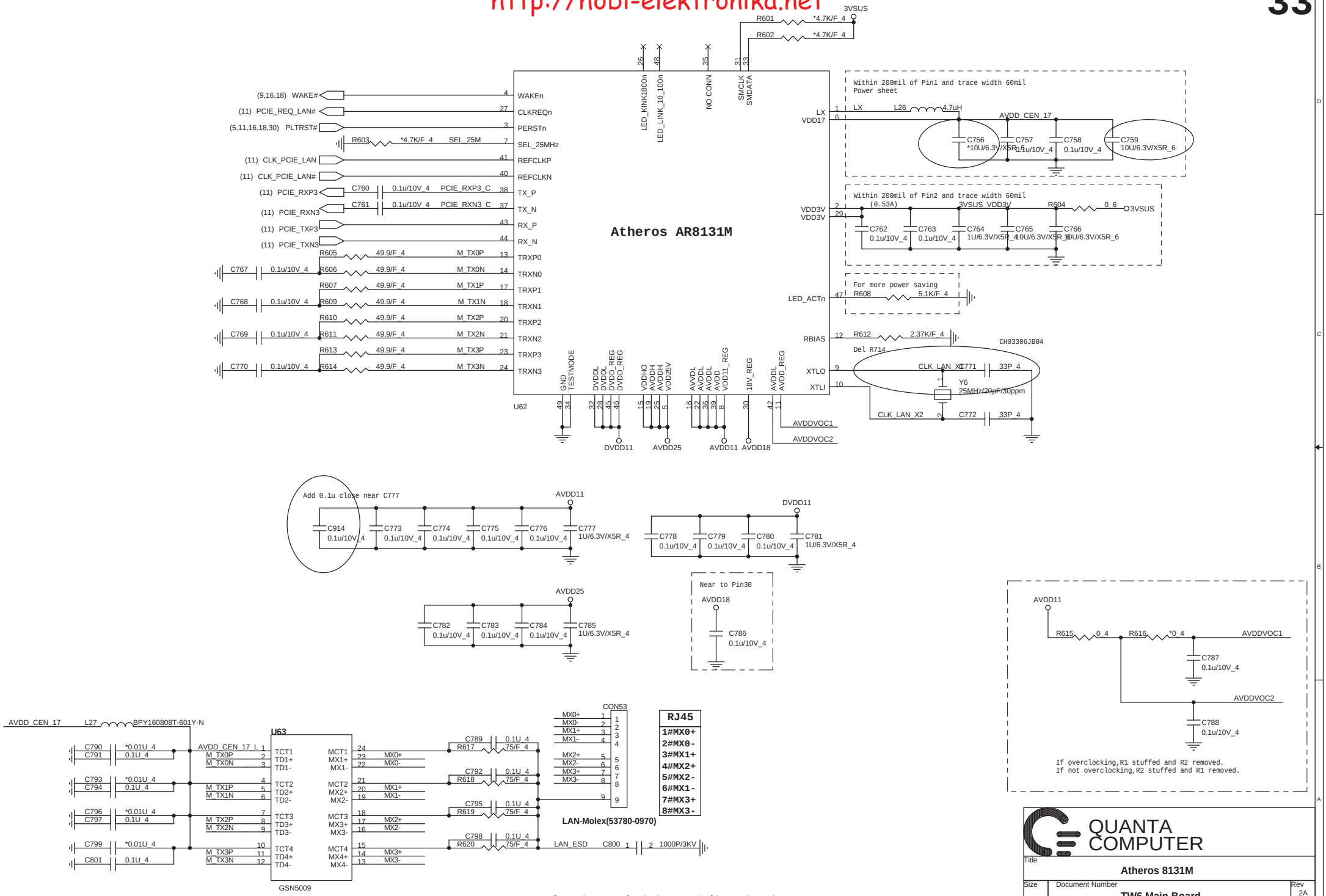

1.Level 1 Environment-related Substances Should NEVER be Used.
2.Purchase ink, paint, wire rods, and Molding resins only from the business Partners that Sony approves as Green Partners.

QUANTA COMPUTER

Title	Atheros 8131M	
Size	Document Number: TW6 Main Board	Rev 2A
Date: Monday, August 31, 2009	Sheet 33 of 33	