NR2 MLB Block Diagram

01

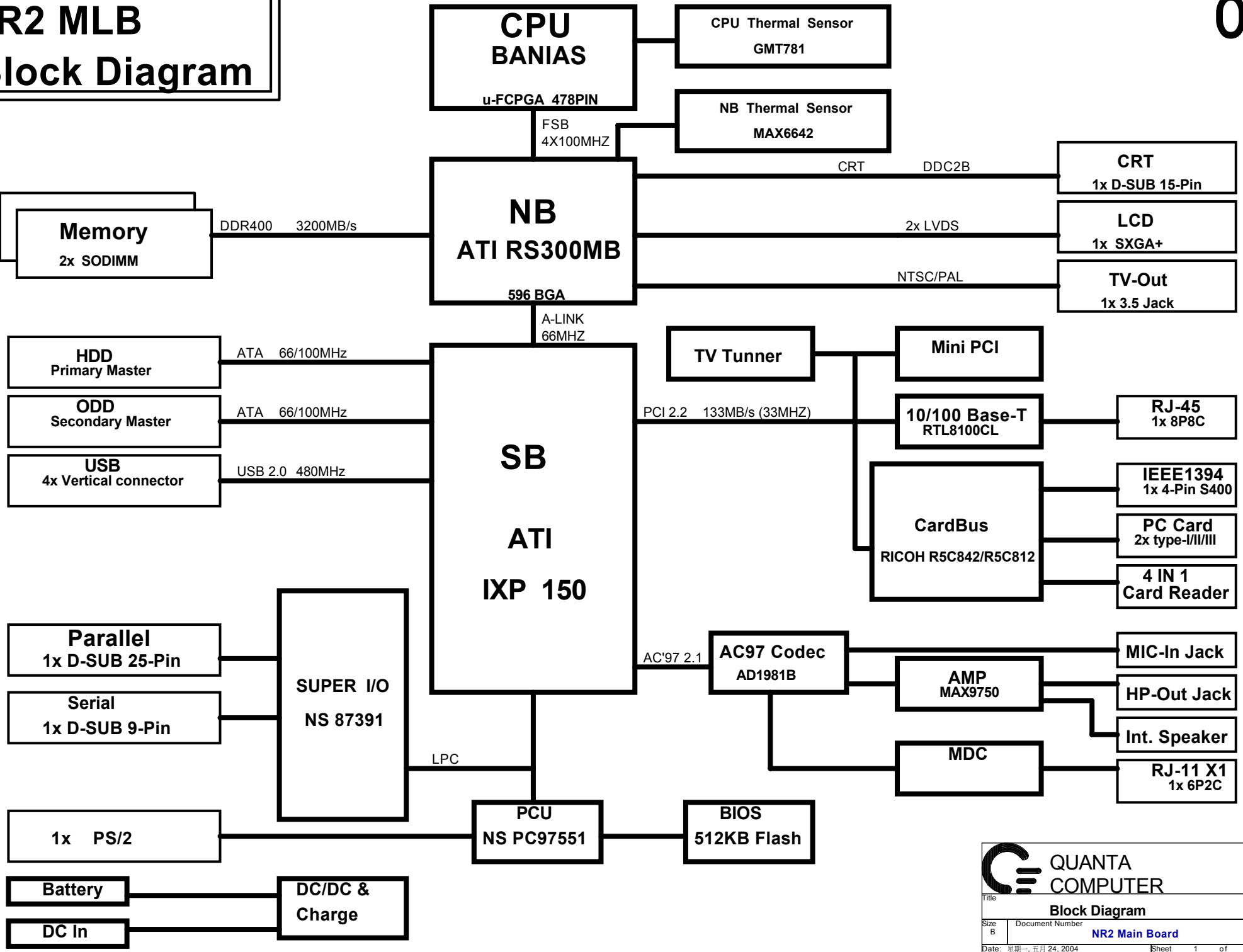

QUANTA COMPUTER

Title: Block Diagram		
Size: B	Document Number: NR2 Main Board	Rev: 1A
Date: 星期一, 五月 24, 2004	Sheet 1 of 40	

Page List

01 Block Diagram
02 Page List
03 BANIAS CPU (HOST BUS)-1
04 BANIAS CPU (POWER/NC)-2
05 RS300MB-AGTL+&AGP&A_LINK-1

06 RS300MB-DDR I/F-2
07 RS300MB-VIDEO I/F&CLKGEN-3
08 RS300MB-POWER-4
09 RS300MB-STRAPS-5
10 DDR SDRAM(on board)

11 DDR SODIMM
12 DDR Terminator A CHANNEL
13 DDR Terminator B CHANNEL
14 CRT&SVIDEO PORT
15 MEM CLK BUFFER/EXT CLK GEN

16 SB150M-ALINK/PCI/CPU/LP-1
17 SB150M-IDE/USB-2
18 SB150M-PWR & DECOUPLING-3
19 SB150M-STRAPS-4
20 R5C842_ PCI/1394

21 R5C842_CARDBUS/MEDIA
22 SD_MS_XD SLOT
23 LAN_RTL8100CL
24 AUDIO CODEC_AD1981B
25 AMP_MAX9750&INT.SPEAKER

26 MINI PCI&MDC
27 IDE HDD&ODD CONNECT
28 TV TUNNER MODULE
29 SUPER I/O_NS87391
30 PARALLEL/SERIAL PORT

31 PCU_NS97551 & BIOS
32 INT. KEYBOARD &TP CONN.
33 USB CONNECT&LKB PWR DRIVE
34 DC/DC 3V&5V
35 2.5V/VCC_NB

36 BATTERY CHARGER
37 BATTERY CONNECTOR
38 CPU CORE (MAX1907)
39 1.05/1.2/1.8 & VGA POWER
40 HISTORY

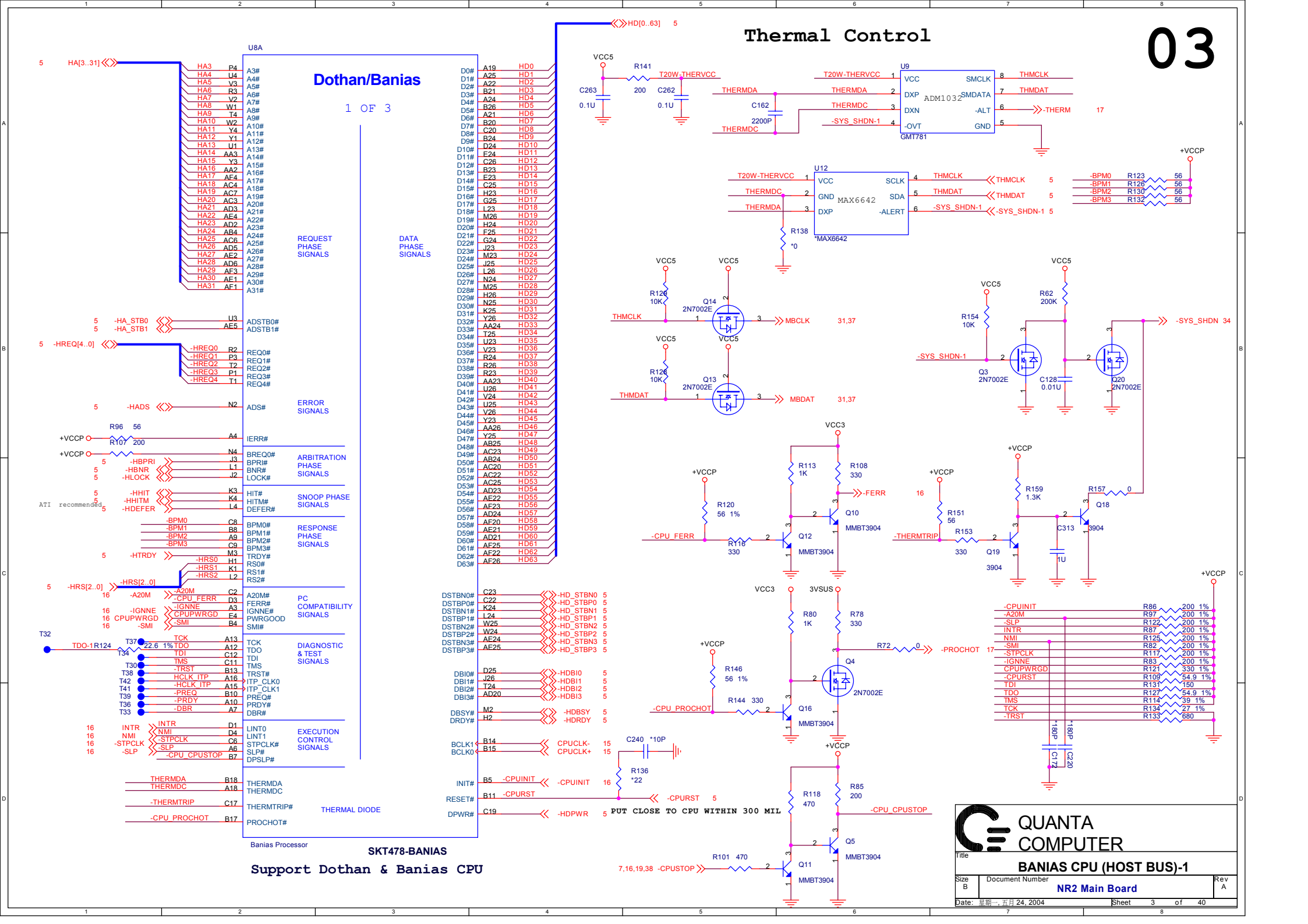
Thermal Control
03
Dothan/Banias
1 OF 3
U8A
REQUEST PHASE SIGNALS
DATA PHASE SIGNALS
ERROR SIGNALS
ARBITRATION PHASE SIGNALS
SNOOP PHASE SIGNALS
RESPONSE PHASE SIGNALS
PC COMPATIBILITY SIGNALS
DIAGNOSTIC & TEST SIGNALS
EXECUTION CONTROL SIGNALS
THERMAL DIODE
Banias Processor
SKT478-BANIAS
Support Dothan & Banias CPU
U9
ADM1032
GMT781
U12
MAX6642
*MAX6642
Q14 2N7002E
Q13 2N7002E
Q3 2N7002E
Q20 2N7002E
Q10 MMBT3904
Q12 MMBT3904
Q19 3904
Q18 3904
Q4 2N7002E
Q16 MMBT3904
Q5 MMBT3904
Q11 MMBT3904
PUT CLOSE TO CPU WITHIN 300 MIL
QUANTA COMPUTER
Title
BANIAS CPU (HOST BUS)-1
Size B
Document Number
NR2 Main Board
Rev A
Date: 星期一, 五月 24, 2004
Sheet 3 of 40

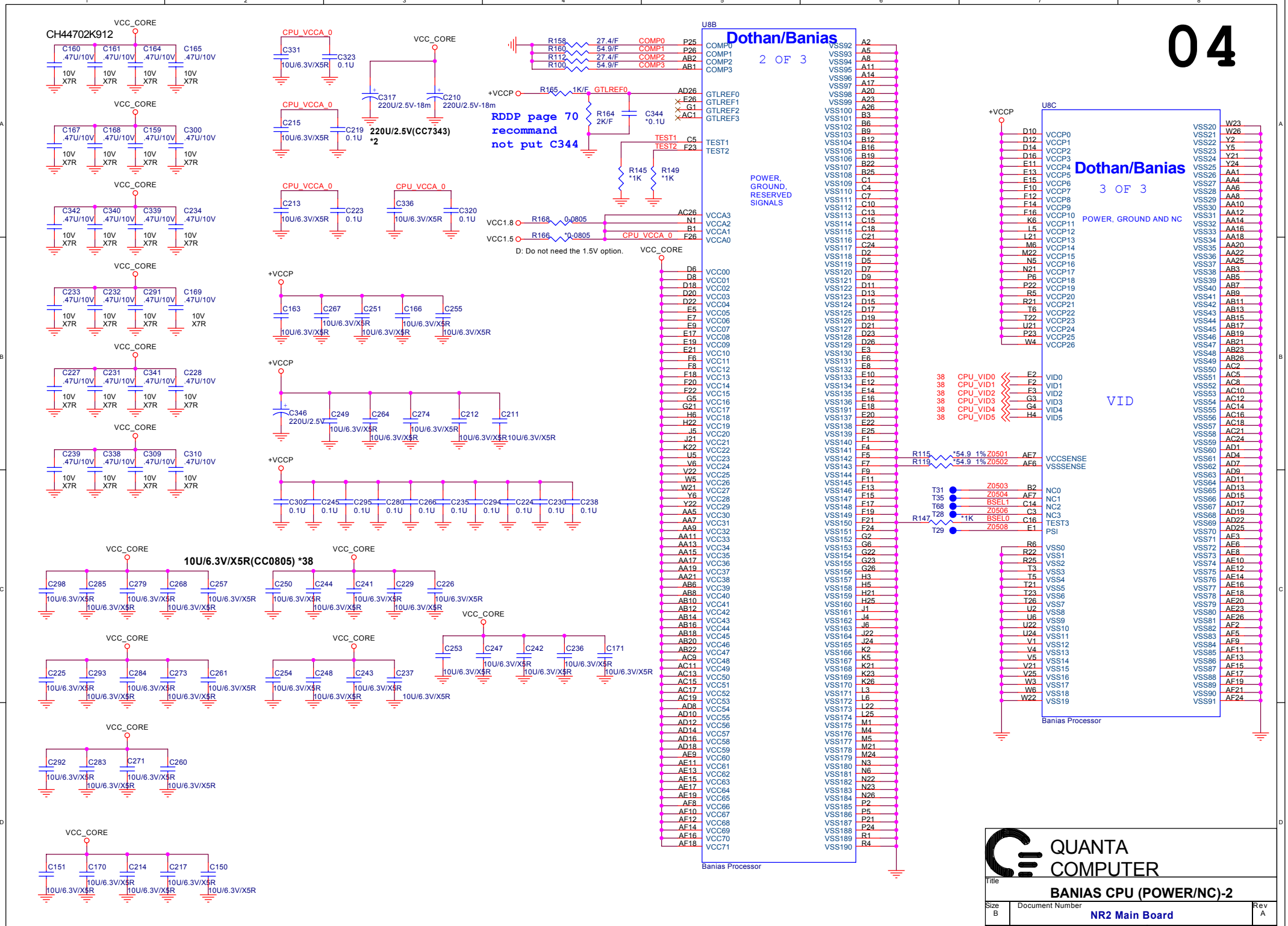
04
CH44702K912
VCC_CORE
C160 .47U/10V
C161 .47U/10V
C164 .47U/10V
C165 .47U/10V
C167 .47U/10V
C168 .47U/10V
C159 .47U/10V
C300 .47U/10V
C342 .47U/10V
C340 .47U/10V
C339 .47U/10V
C234 .47U/10V
C233 .47U/10V
C232 .47U/10V
C291 .47U/10V
C169 .47U/10V
C227 .47U/10V
C231 .47U/10V
C341 .47U/10V
C228 .47U/10V
C239 .47U/10V
C338 .47U/10V
C309 .47U/10V
C310 .47U/10V
10V X7R
CPU_VCCA_0
C331 10U/6.3V/X5R
C323 0.1U
C215 10U/6.3V/X5R
C219 0.1U
C213 10U/6.3V/X5R
C223 0.1U
C336 10U/6.3V/X5R
C320 0.1U
C317 220U/2.5V-18m
C210 220U/2.5V-18m
220U/2.5V(CC7343) *2
RDDP page 70 recommand not put C344
R158 27.4/F COMP0
R160 54.9/F COMP1
R112 27.4/F COMP2
R100 54.9/F COMP3
+VCCP
R165 1K/F GTLREF0
R164 2K/F
C344 *0.1U
TEST1
TEST2
R145 *1K
R149 *1K
VCC1.8
R168 0-0805
VCC1.5
R166 *0-0805
D: Do not need the 1.5V option.
U8B
Dothan/Banias
2 OF 3
POWER, GROUND, RESERVED SIGNALS
Banias Processor
C163 10U/6.3V/X5R
C267 10U/6.3V/X5R
C251 10U/6.3V/X5R
C166 10U/6.3V/X5R
C255 10U/6.3V/X5R
C346 220U/2.5V
C249 10U/6.3V/X5R
C264 10U/6.3V/X5R
C274 10U/6.3V/X5R
C212 10U/6.3V/X5R
C211 10U/6.3V/X5R
C302 0.1U
C245 0.1U
C295 0.1U
C280 0.1U
C266 0.1U
C235 0.1U
C294 0.1U
C224 0.1U
C230 0.1U
C238 0.1U
10U/6.3V/X5R(CC0805) *38
C298 10U/6.3V/X5R
C285 10U/6.3V/X5R
C279 10U/6.3V/X5R
C268 10U/6.3V/X5R
C257 10U/6.3V/X5R
C250 10U/6.3V/X5R
C244 10U/6.3V/X5R
C241 10U/6.3V/X5R
C229 10U/6.3V/X5R
C226 10U/6.3V/X5R
C225 10U/6.3V/X5R
C293 10U/6.3V/X5R
C284 10U/6.3V/X5R
C273 10U/6.3V/X5R
C261 10U/6.3V/X5R
C254 10U/6.3V/X5R
C248 10U/6.3V/X5R
C243 10U/6.3V/X5R
C237 10U/6.3V/X5R
C253 10U/6.3V/X5R
C247 10U/6.3V/X5R
C242 10U/6.3V/X5R
C236 10U/6.3V/X5R
C171 10U/6.3V/X5R
C292 10U/6.3V/X5R
C283 10U/6.3V/X5R
C271 10U/6.3V/X5R
C260 10U/6.3V/X5R
C151 10U/6.3V/X5R
C170 10U/6.3V/X5R
C214 10U/6.3V/X5R
C217 10U/6.3V/X5R
C150 10U/6.3V/X5R
U8C
Dothan/Banias
3 OF 3
POWER, GROUND AND NC
VID
38 CPU_VID0
38 CPU_VID1
38 CPU_VID2
38 CPU_VID3
38 CPU_VID4
38 CPU_VID5
R115 *54.9 1% Z0501
R119 *54.9 1% Z0502
T31 Z0503
T35 Z0504
T68 BSEL1
T28 Z0506
R147 *1K
BSEL0
T29 Z0508
Banias Processor
QUANTA COMPUTER
Title
BANIAS CPU (POWER/NC)-2
Size B
Document Number
NR2 Main Board
Rev A
Date: 星期一, 五月 24, 2004
Sheet 4 of 40

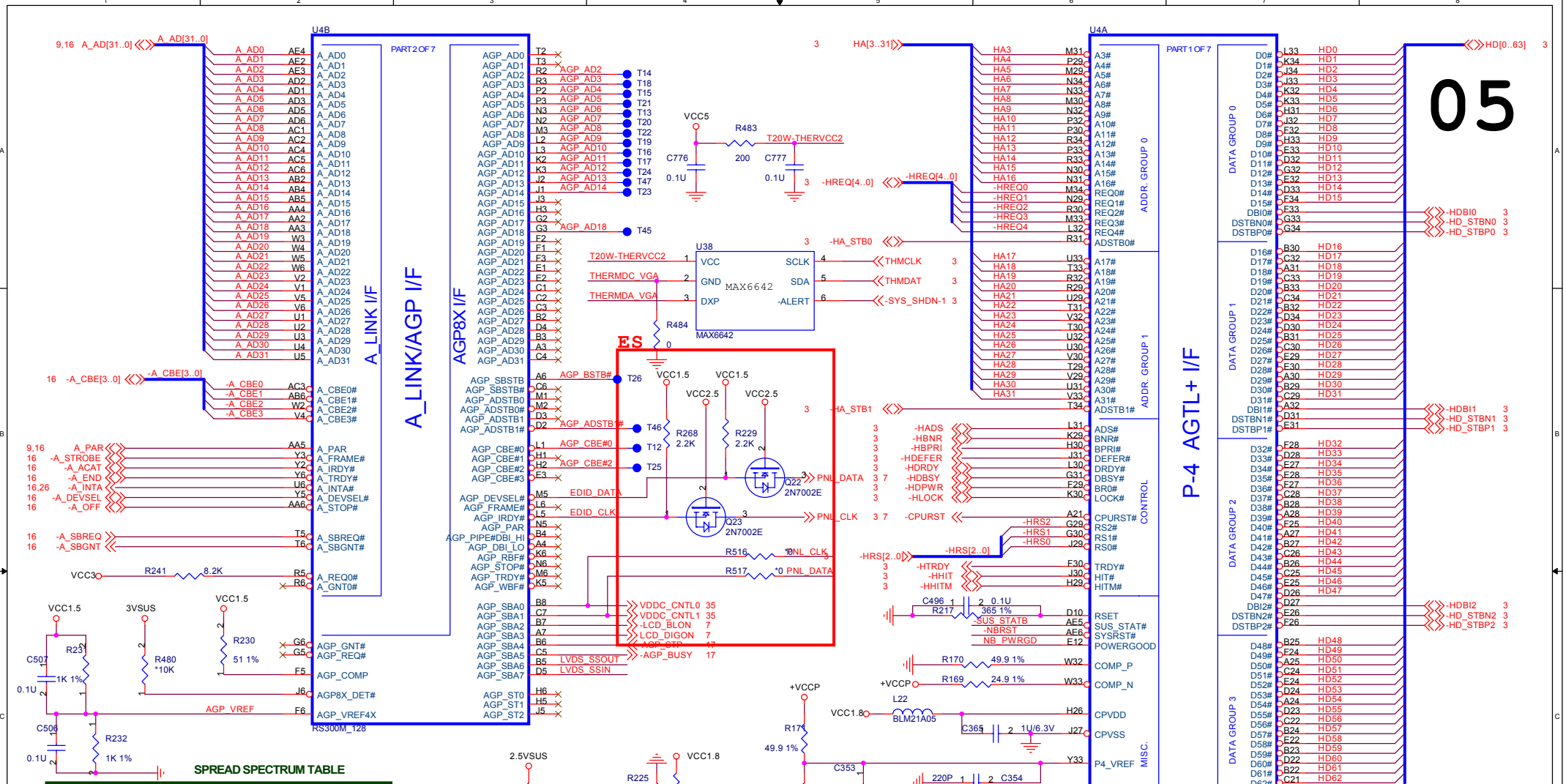

SPREAD SPECTRUM TABLE

SD	S1	S0	DIRECTION		% SPREAD
GND	GND	GND	DOWN		+0.6
GND	GND	DNI	DOWN		+0.8
GND	GND	+3.3V	DOWN		+1.25
GND	DNI	GND	DOWN	CENTER	+.5 -1.5
GND	DNI	DNI	DOWN		+2
GND	DNI	+3.3V	DOWN	CENTER	+.5 -2.5
GND	+3.3V	GND	DOWN	CENTER	+.5 -3
GND	+3.3V	DNI	DOWN		+5
+3.3V	GND	GND	CENTER		+/-0.35
+3.3V	GND	DNI	CENTER		+/- 0.5
+3.3V	GND	+3.3V	CENTER		+/- 0.7
+3.3V	DNI	GND	CENTER		+/- 0.8
+3.3V	DNI	DNI	CENTER		+/- 1.1
+3.3V	DNI	+3.3V	CENTER		+/- 1.4
+3.3V	+3.3V	DNI	CENTER		+/- 2.5

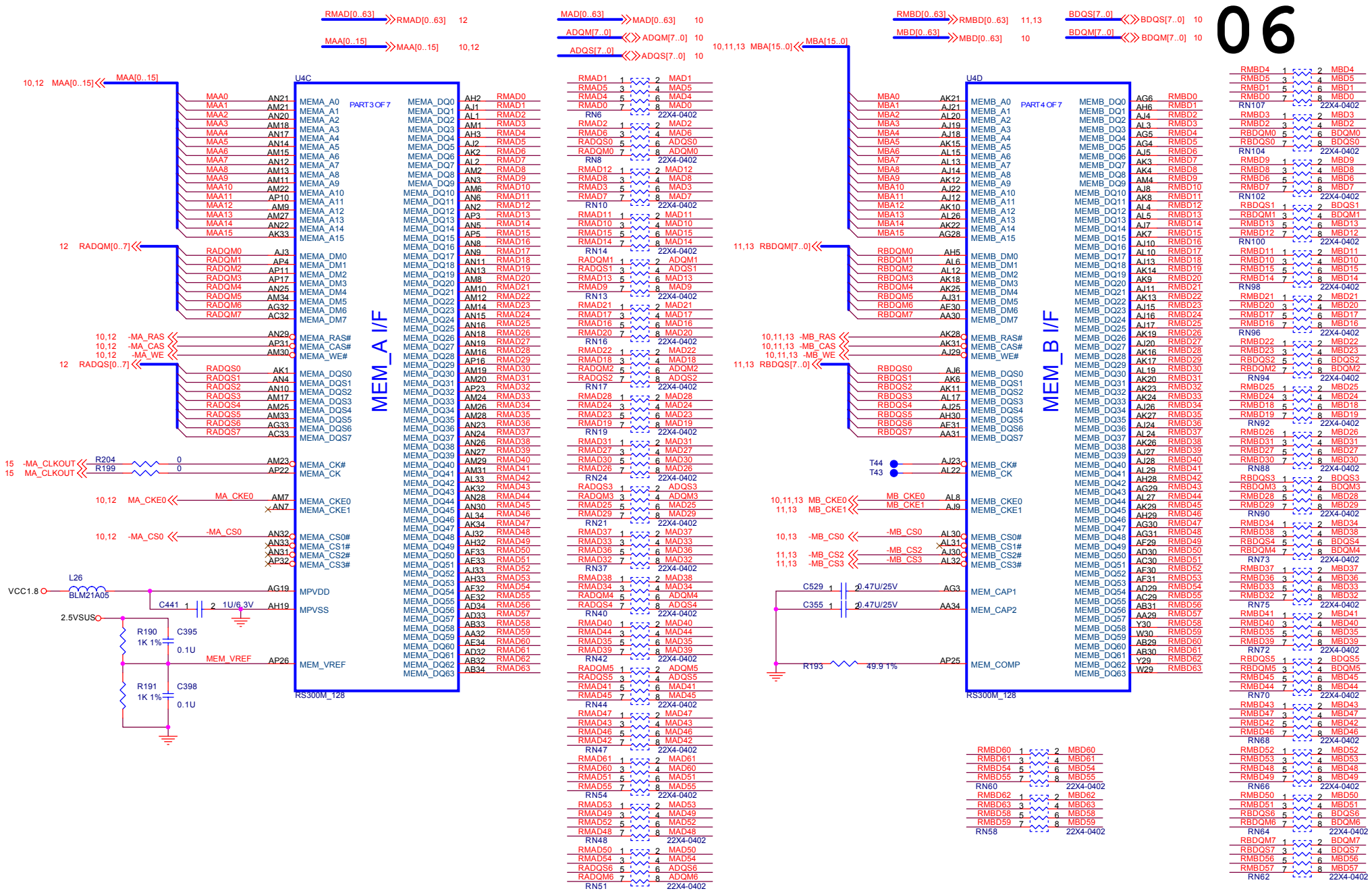
06
U4C
MEM_A I/F
PART 3 OF 7
RS300M_128
U4D
MEM_B I/F
PART 4 OF 7
RS300M_128
RMAD[0..63] 12
MAA[0..15] 10,12
MAD[0..63] 10
ADQM[7..0] 10
ADQS[7..0] 10
RMBD[0..63] 11,13
MBD[0..63] 10
BDQS[7..0] 10
BDQM[7..0] 10
10,11,13 MBA[15..0]
11,13 RBDQM[7..0]
10,12 MAA[0..15]
12 RADQM[0..7]
10,12 -MA_RAS
10,12 -MA_CAS
10,12 -MA_WE
12 RADQS[0..7]
15 -MA_CLKOUT
15 MA_CLKOUT
R204 0
R199 0
10,12 MA_CKE0
10,12 -MA_CS0
VCC1.8
L26
BLM21A05
C441 1 2 1U/6.3V
2.5VSUS
R190 1K 1%
C395 0.1U
R191 1K 1%
C398 0.1U
MEM_VREF
MPVDD
MPVSS
T44
T43
10,11,13 MB_CKE0
11,13 MB_CKE1
10,13 -MB_CS0
11,13 -MB_CS2
11,13 -MB_CS3
C529 1 2 0.47U/25V
C355 1 2 0.47U/25V
R193 49.9 1%
10,11,13 -MB_RAS
10,11,13 -MB_CAS
10,11,13 -MB_WE
11,13 RBDQS[7..0]
RN6 22X4-0402
RN8 22X4-0402
RN10 22X4-0402
RN14 22X4-0402
RN13 22X4-0402
RN16 22X4-0402
RN17 22X4-0402
RN19 22X4-0402
RN21 22X4-0402
RN37 22X4-0402
RN40 22X4-0402
RN42 22X4-0402
RN44 22X4-0402
RN47 22X4-0402
RN48 22X4-0402
RN51 22X4-0402
RN54 22X4-0402
RN55 22X4-0402
RN56 22X4-0402
RN107 22X4-0402
RN104 22X4-0402
RN102 22X4-0402
RN100 22X4-0402
RN98 22X4-0402
RN96 22X4-0402
RN94 22X4-0402
RN92 22X4-0402
RN90 22X4-0402
RN88 22X4-0402
RN73 22X4-0402
RN75 22X4-0402
RN72 22X4-0402
RN70 22X4-0402
RN68 22X4-0402
RN66 22X4-0402
RN64 22X4-0402
RN62 22X4-0402
RN60 22X4-0402
RN58 22X4-0402
QUANTA COMPUTER
Title
RS300MB-DDR I/F 2/6
Size Custom
Document Number NR2 Main Board
Rev 1A
Date: 星期一, 五月 24, 2004
Sheet 6 of 40

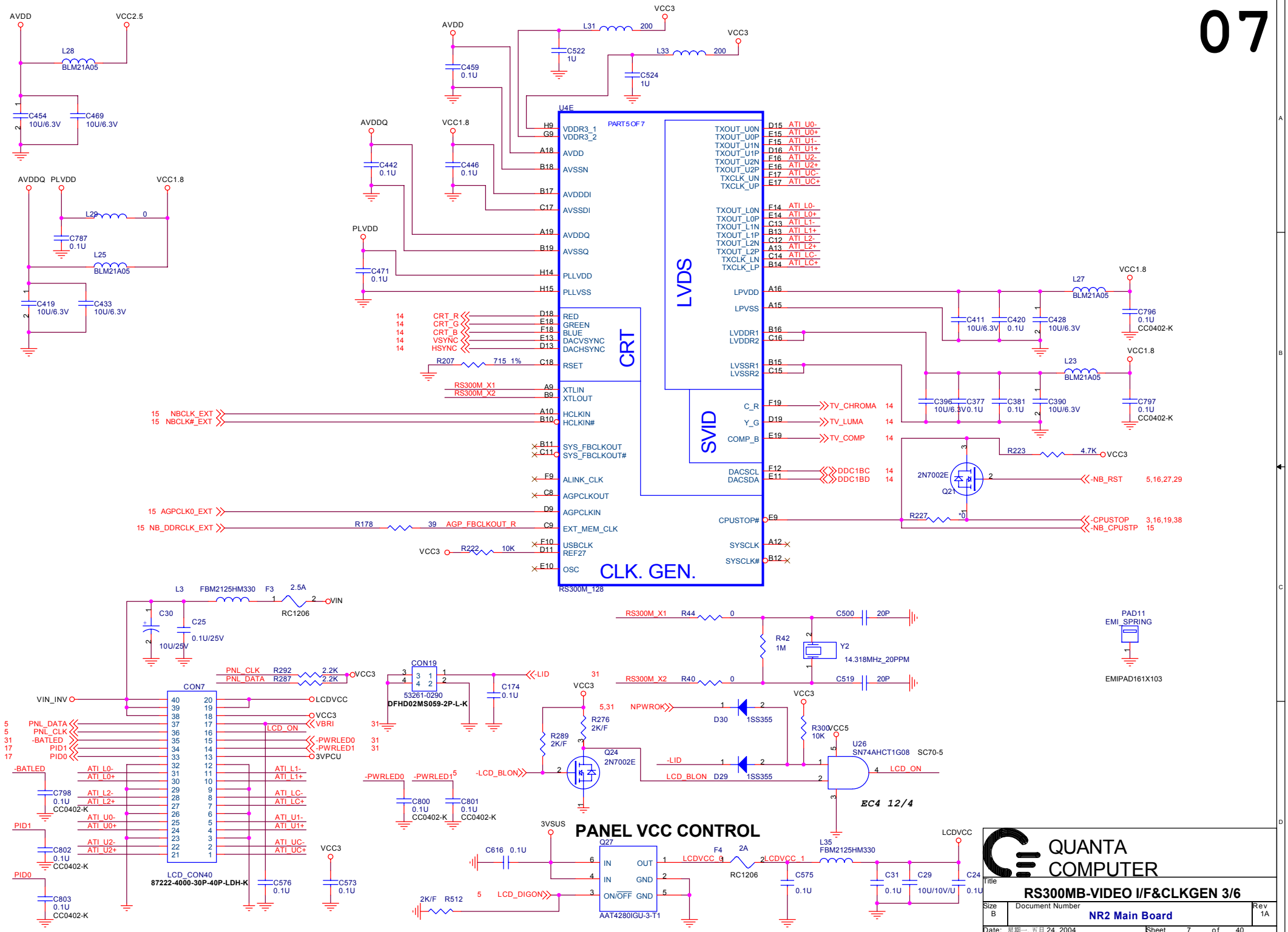
U4E
PART 5 OF 7
CLK. GEN.
RS300M_128
LVDS
CRT
SVID
VDDR3_1
VDDR3_2
AVDD
AVSSN
AVDDDI
AVSSDI
AVDDQ
AVSSQ
PLLVDD
PLLVSS
RED
GREEN
BLUE
DACVSYNC
DACHSYNC
RSET
XTLIN
XTLOUT
HCLKIN
HCLKIN#
SYS_FBCLKOUT
SYS_FBCLKOUT#
ALINK_CLK
AGPCLKOUT
AGPCLKIN
EXT_MEM_CLK
USBCLK
REF27
OSC
TXOUT_U0N
TXOUT_U0P
TXOUT_U1N
TXOUT_U1P
TXOUT_U2N
TXOUT_U2P
TXCLK_UN
TXCLK_UP
TXOUT_L0N
TXOUT_L0P
TXOUT_L1N
TXOUT_L1P
TXOUT_L2N
TXOUT_L2P
TXCLK_LN
TXCLK_LP
LPVDD
LPVSS
LVDDR1
LVDDR2
LVSSR1
LVSSR2
C_R
Y_G
COMP_B
DACSCL
DACSDA
CPUSTOP#
SYSCLK
SYSCLK#
ATI_U0-
ATI_U0+
ATI_U1-
ATI_U1+
ATI_U2-
ATI_U2+
ATI_UC-
ATI_UC+
ATI_L0-
ATI_L0+
ATI_L1-
ATI_L1+
ATI_L2-
ATI_L2+
ATI_LC-
ATI_LC+
CRT_R
CRT_G
CRT_B
VSYNC
HSYNC
R207 715 1%
RS300M_X1
RS300M_X2
NBCLK_EXT
NBCLK#_EXT
AGPCLK0_EXT
NB_DDRCLK_EXT
R178 39 AGP_FBCLKOUT_R
R222 10K
TV_CHROMA
TV_LUMA
TV_COMP
DDC1BC
DDC1BD
-NB_RST
-CPUSTOP
-NB_CPUSTP
R223 4.7K
R227 0
2N7002E
Q21
VCC3
VCC1.8
VCC2.5
VCC1.8
L28 BLM21A05
L29 0
L25 BLM21A05
L27 BLM21A05
L23 BLM21A05
L31 200
L33 200
C454 10U/6.3V
C469 10U/6.3V
C419 10U/6.3V
C433 10U/6.3V
C787 0.1U
C459 0.1U
C522 1U
C524 1U
C442 0.1U
C446 0.1U
C471 0.1U
C411 10U/6.3V
C420 0.1U
C428 10U/6.3V
C796 0.1U CC0402-K
C396 10U/6.3V
C377 0.1U
C381 0.1U
C390 10U/6.3V
C797 0.1U CC0402-K
L3 FBM2125HM330
F3 2.5A
RC1206
VIN
C30 10U/25V
C25 0.1U/25V
R44 0
R40 0
R42 1M
Y2 14.318MHz_20PPM
C500 20P
C519 20P
PAD11
EMI_SPRING
EMIPAD161X103
PNL_CLK R292 2.2K
PNL_DATA R287 2.2K
CON19
53261-0290
DFHD02MS059-2P-L-K
C174 0.1U
-LID
CON7
LCD_CON40
87222-4000-30P-40P-LDH-K
VIN_INV
LCDVCC
VBRI
LCD_ON
-PWRLED0
-PWRLED1
3VPCU
-BATLED
PID1
PID0
C798 0.1U CC0402-K
C802 0.1U CC0402-K
C803 0.1U CC0402-K
C576 0.1U
C573 0.1U
NPWROK
D30 1SS355
D29 1SS355
R276 2K/F
R289 2K/F
Q24 2N7002E
-LCD_BLON
C800 0.1U CC0402-K
C801 0.1U CC0402-K
R300/CC5 10K
U26 SN74AHCT1G08 SC70-5
EC4 12/4
PANEL VCC CONTROL
3VSUS
C616 0.1U
Q27
IN
OUT
GND
ON/OFF
AAT4280IGU-3-T1
LCD_DIGON
R512 2K/F
LCDVCC_0
F4 2A
RC1206
LCDVCC_1
L35 FBM2125HM330
C575 0.1U
C31 0.1U
C29 10U/10V/U
C24 0.1U
LCDVCC
QUANTA COMPUTER
Title
RS300MB-VIDEO I/F&CLKGEN 3/6
Size B
Document Number
NR2 Main Board
Rev 1A
Date: 星期一, 五月 24, 2004
Sheet 7 of 40

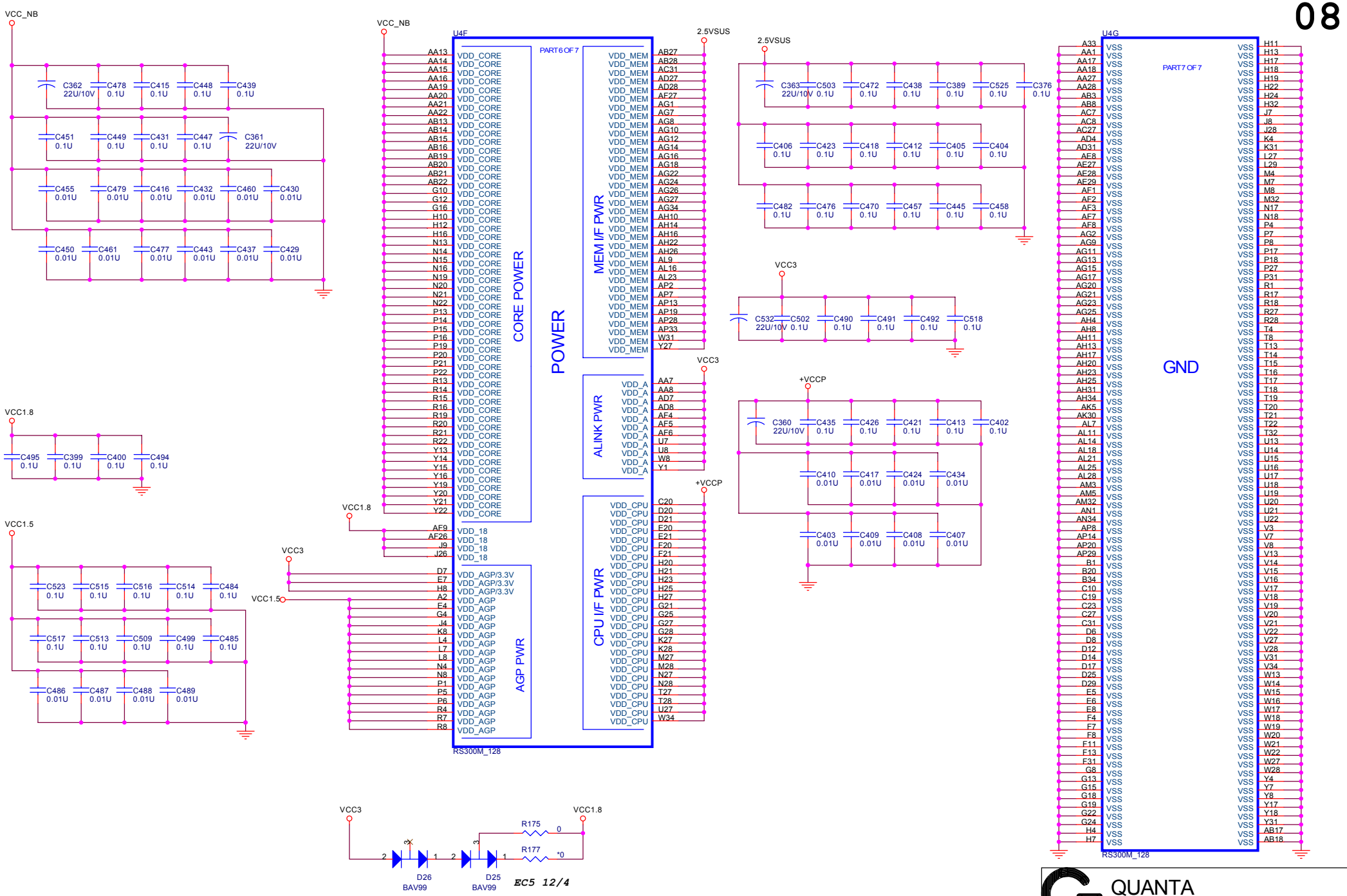

1.8V (NB) should ramp up with 3V, < 2.1V

QUANTA COMPUTER

Title: RS300MB-POWER 4/6

Size: Custom | Document Number: NR2 Main Board | Rev: 1A

Date: 星期一, 五月 24, 2004 | Sheet 8 of 40

A_AD[31..0] A_AD[31..0] 5,16

A_AD31 R255 4.7K

AD[31..30] : FSB CLK SPEED

DEFAULT: 00
00: 100 MHZ
01: 133 MHZ
10: 200 MHZ
11: 166MHZ

A_AD30 R254 4.7K

AD29: STRAP CONFIGURATION

DEFAULT:1
0: REDUCED SET
1: FULL SET

A_AD29 R257 *4.7K

AD28: SPREAD SPECTRUM ENABLE

DEFAULT:0
0: DISABLE SS
1: ENABLE SS

A_AD28 R256 4.7K

AD27: FrcShortReset#

DEFAULT: 1
0: TEST MODE
1: NORMAL MODE

A_AD27 R259 *4.7K

AD26: ENABLE IOQ

DEFAULT : 1
0: IOQ=1
1: IOQ=12

A_AD26 R261 *4.7K

AD25, AD17: CPU VOLTAGE [1], CPU VOLTAGE [0]

DEFAULT : 00
00: 1.05V (MOBILE CPU)
01: 1.35V (MOBILE CPU)
10: 1.45V (DESKTOP)
11: 1.75V (DESKTOP)

A_AD25 R260 4.7K

A_AD17 R238 4.7K

A_AD24 R258 4.7K

AD24 : MOBILE CPU SELECT

DEFAULT : 0
0: BANIAS CPU
1: NOT BANIAS CPU

A_AD23 R235 *4.7K

AD23 : CLOCK BYPASS DISABLE

DEFAULT : 1
0: TEST MODE
1: NORMAL OPERATION

A_AD22 R237 *4.7K

AD22 : OSC PAD OUTPUT PCICLK

DEFAULT : 1
0: OSC PIN DRIVES PCICLK
1: OSC PIN DRIVES OSC CLK

A_AD21 R236 *4.7K

AD21 : AUTO_CAL ENABLE

DEFAULT : 1
0: DISABLE AUTO-CAL
1: ENABLE AUTO-CAL

A_AD20 R234 4.7K

AD20 : INTERNAL CLK GEN ENABLE

DEFAULT : 1
0: EXTERNAL CLOCK GENERATOR
1: INTERNAL CLOCK GENERATOR

A_AD19 R233 *4.7K

AD19 : MEMORY IO VOLTAGE SELECTION

DEFAULT : 1
0: 1.8V
1: 2.5V

A_AD18 R239 4.7K

AD18 : ENABLE PHASE CALIBRATION

DEFAULT : 0
0: DISABLE
1: ENABLE

5,16 A_PAR R253 *4.7K

PAR : EXTENDED DEBUG MODE

DEFAULT : 1
0: DEBUG MODE
1: NORMAL OPERATION

QUANTA COMPUTER

Title	RS300MB-STRAPS 5/6	
Size B	Document Number NR2 Main Board	Rev A
Date: 星期一, 五月 24, 2004	Sheet 9 of 40	

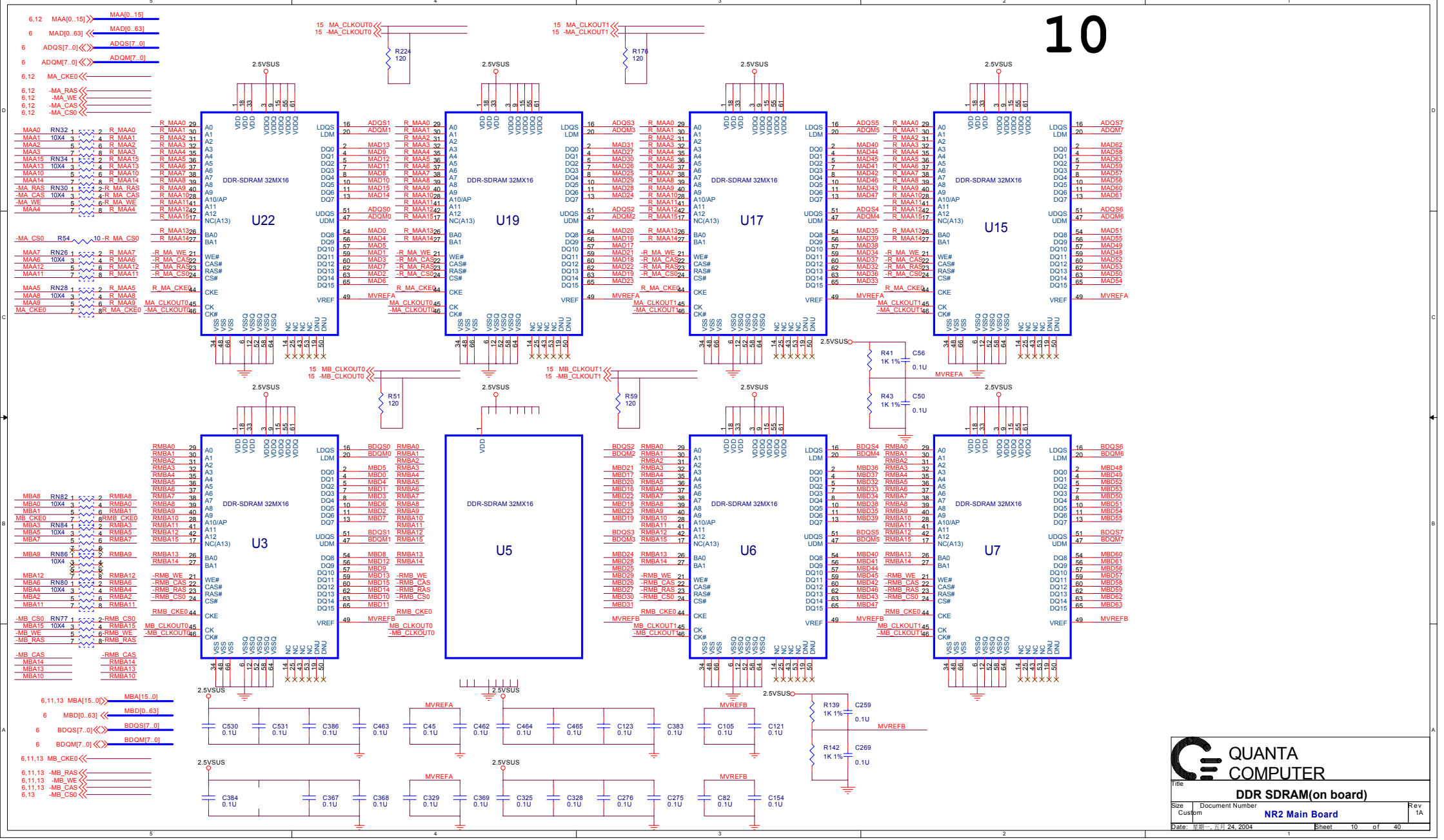

QUANTA COMPUTER

Title: **DDR SDRAM(on board)**

Size: Custom | Document Number: **NR2 Main Board** | Rev: 1A

Date: 星期一, 五月 24, 2004 | Sheet 10 of 40

DDR TERMINATOR CHANNEL A

MAA Terminator

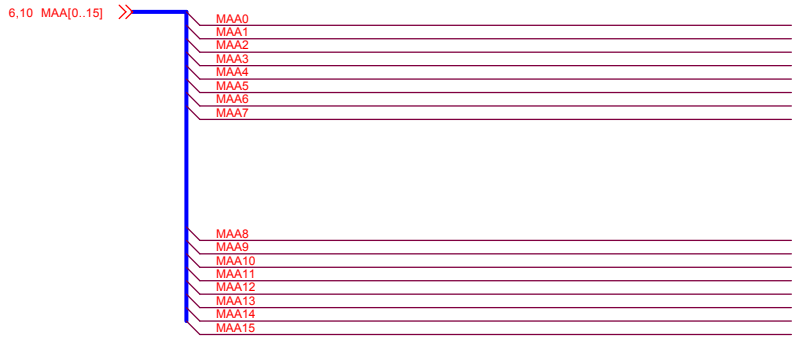

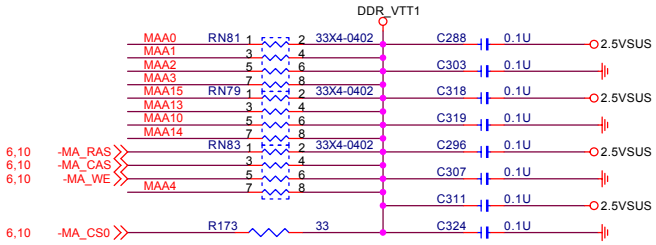

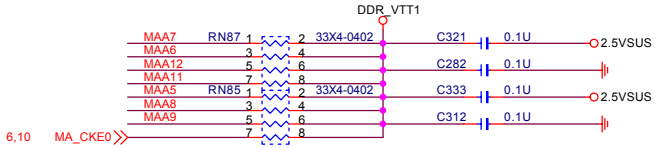

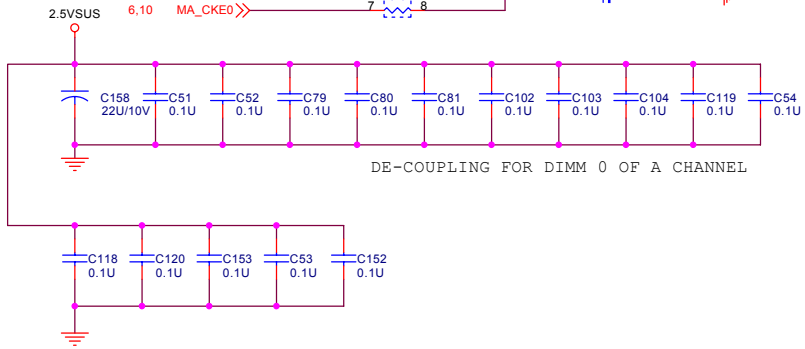

11/03 CHANGE FOOTPRINT FORM 0603 TO 0402

QUANTA COMPUTER

Title		
DDR Terminator-A CHANNEL		
Size B	Document Number NR2 Main Board	Rev 1A
Date: 星期一, 五月 24, 2004	Sheet 12 of 40	

DDR TERMINATOR CHANNEL B

MBA Terminator

13

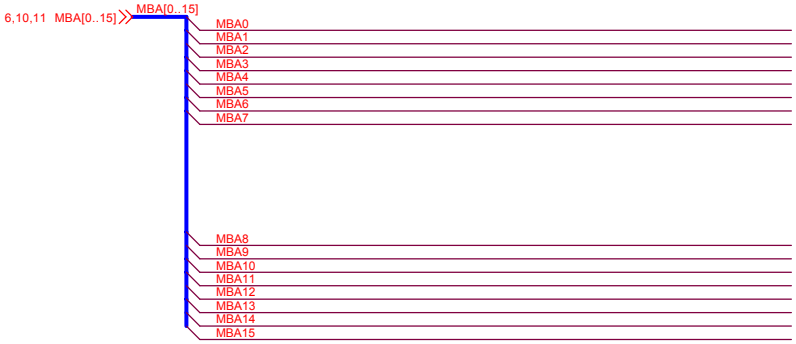

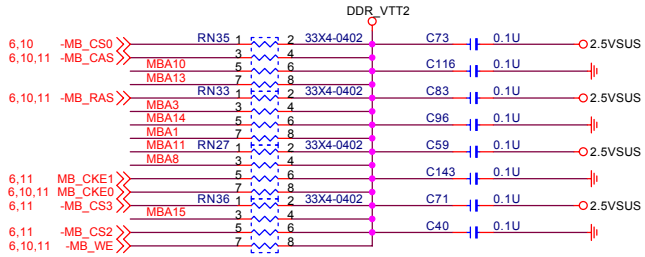

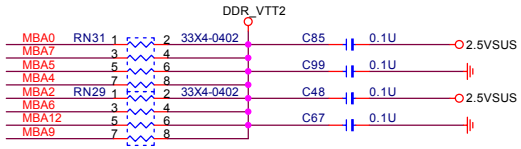

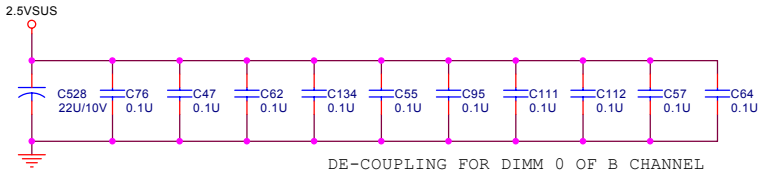

DE-COUPLING FOR DIMM 0 OF B CHANNEL

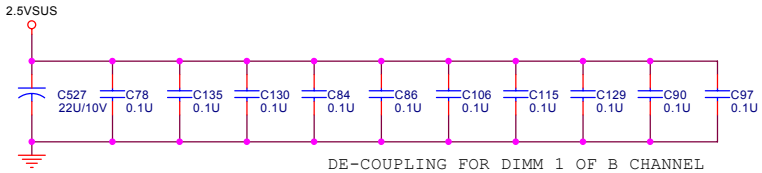

DE-COUPLING FOR DIMM 1 OF B CHANNEL

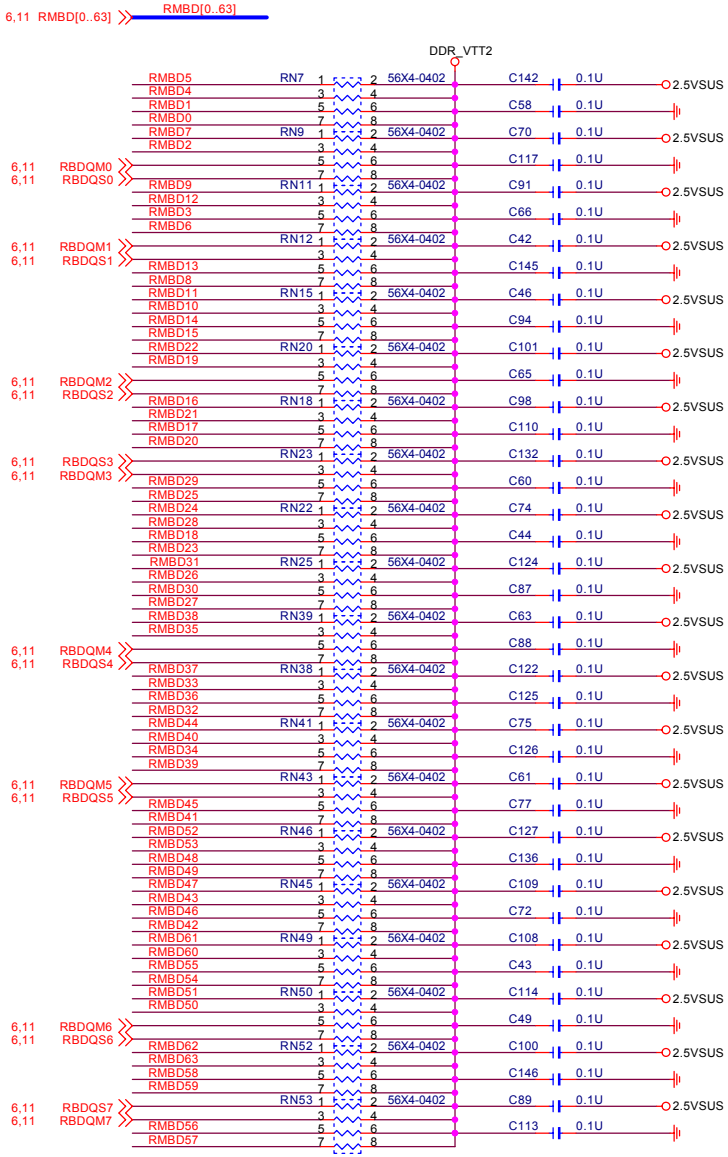

QUANTA COMPUTER

Title		
DDR Terminator B CHANNEL		
Size: Custom	Document Number: NR2 Main Board	Rev: 1A
Date: 星期一, 五月 24, 2004	Sheet 13 of 40	

S-VIDEO CONNECTOR

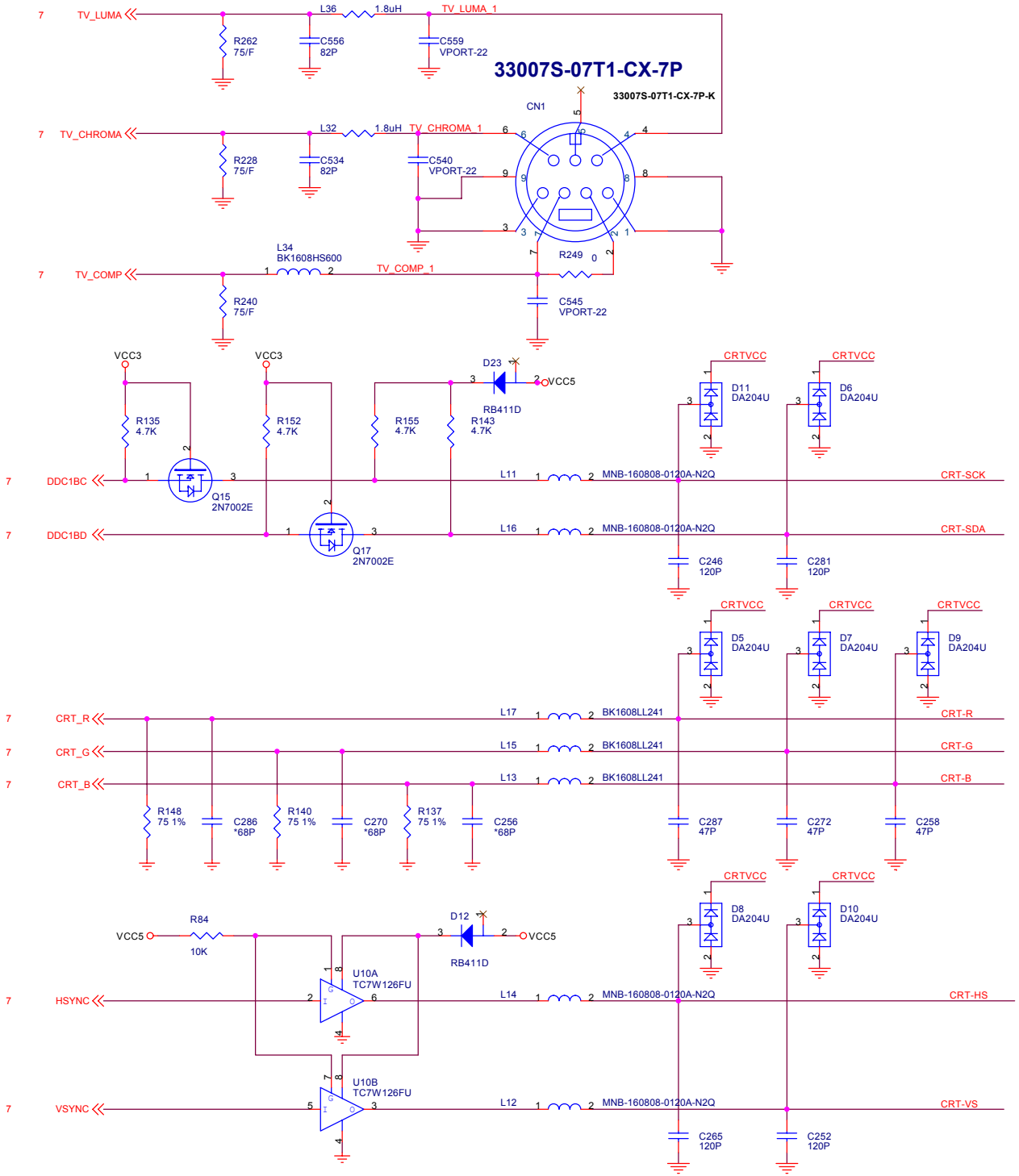

CRT CONNECTOR

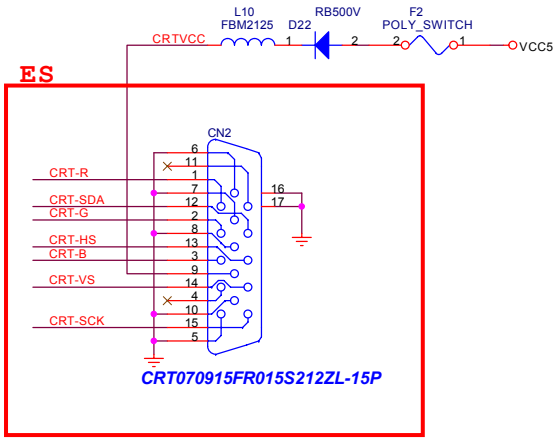

QUANTA COMPUTER

Title	CRT/S-VIDEO PORT	
Size B	Document Number NR2 Main Board	Rev 1A
Date: 星期一, 五月 24, 2004	Sheet 14 of 40	

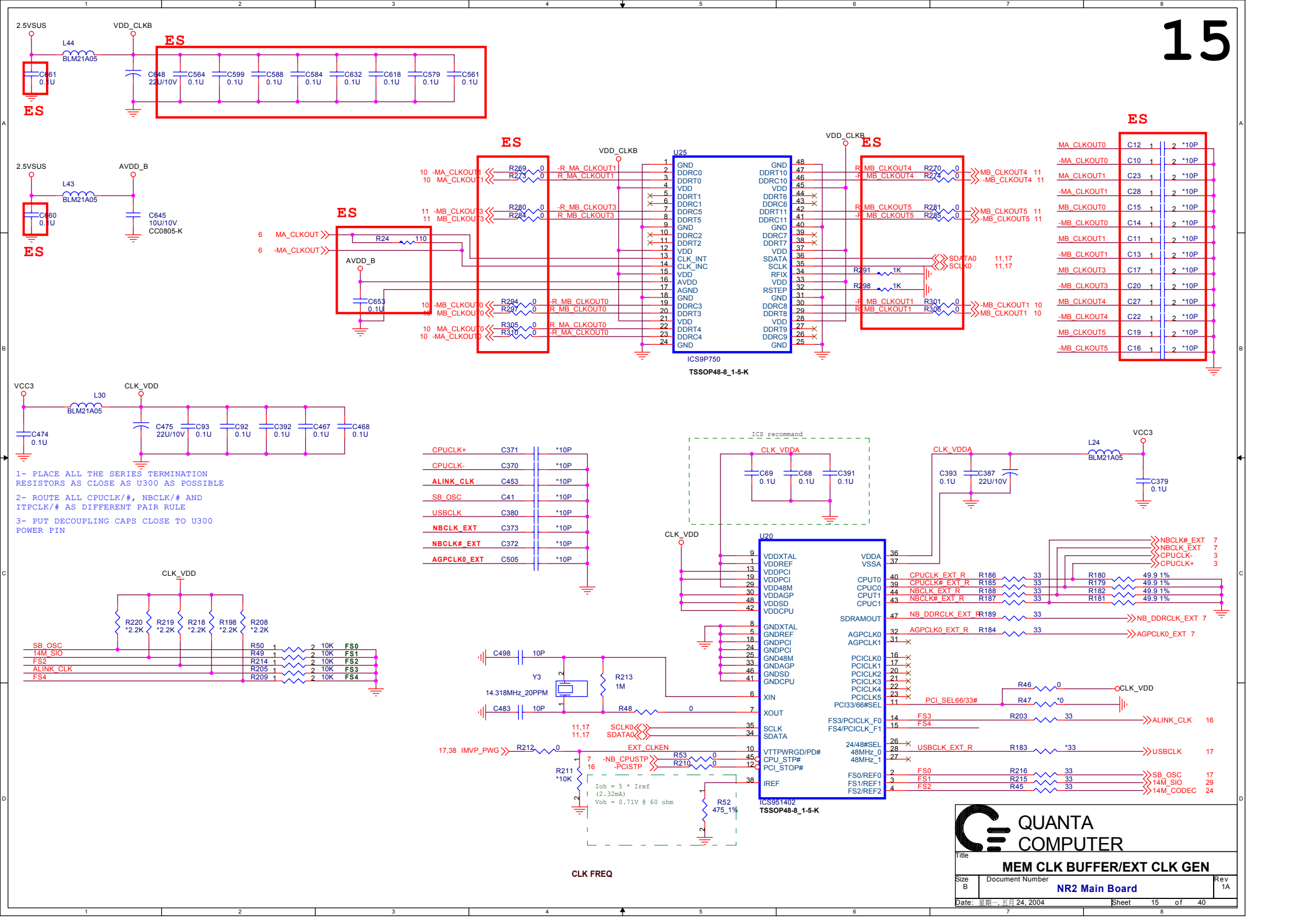
2.5VSUS
VDD_CLKB
L44
BLM21A05
C661 0.1U
C648 22U/10V
C564 0.1U
C599 0.1U
C588 0.1U
C584 0.1U
C632 0.1U
C618 0.1U
C579 0.1U
C561 0.1U
ES
2.5VSUS
AVDD_B
L43
BLM21A05
C660 0.1U
C645 10U/10V CC0805-K
MA_CLKOUT
-MA_CLKOUT
R24 110
AVDD_B
C653 0.1U
R269 0 -R_MA_CLKOUT1
R273 0 R_MA_CLKOUT1
R280 0 -R_MB_CLKOUT3
R284 0 R_MB_CLKOUT3
R294 0 -R_MB_CLKOUT0
R297 0 R_MB_CLKOUT0
R305 0 R_MA_CLKOUT0
R310 0 -R_MA_CLKOUT0
VDD_CLKB
U25
ICS9P750
TSSOP48-8_1-5-K
R270 0 MB_CLKOUT4
R274 0 -MB_CLKOUT4
R281 0 MB_CLKOUT5
R285 0 -MB_CLKOUT5
SDATA0
SCLK0
R291 1K
R298 1K
R301 0 -MB_CLKOUT1
R308 0 MB_CLKOUT1
MA_CLKOUT0 C12 *10P
-MA_CLKOUT0 C10 *10P
MA_CLKOUT1 C23 *10P
-MA_CLKOUT1 C28 *10P
MB_CLKOUT0 C15 *10P
-MB_CLKOUT0 C14 *10P
MB_CLKOUT1 C11 *10P
-MB_CLKOUT1 C13 *10P
MB_CLKOUT3 C17 *10P
-MB_CLKOUT3 C20 *10P
MB_CLKOUT4 C27 *10P
-MB_CLKOUT4 C22 *10P
MB_CLKOUT5 C19 *10P
-MB_CLKOUT5 C16 *10P
VCC3
CLK_VDD
L30
BLM21A05
C474 0.1U
C475 22U/10V
C93 0.1U
C92 0.1U
C392 0.1U
C467 0.1U
C468 0.1U
1- PLACE ALL THE SERIES TERMINATION RESISTORS AS CLOSE AS U300 AS POSSIBLE
2- ROUTE ALL CPUCLK/#, NBCLK/# AND ITPCLK/# AS DIFFERENT PAIR RULE
3- PUT DECOUPLING CAPS CLOSE TO U300 POWER PIN
CPUCLK+ C371 *10P
CPUCLK- C370 *10P
ALINK_CLK C453 *10P
SB_OSC C41 *10P
USBCLK C380 *10P
NBCLK_EXT C373 *10P
NBCLK#_EXT C372 *10P
AGPCLK0_EXT C505 *10P
ICS recommand
CLK_VDDA
C69 0.1U
C68 0.1U
C391 0.1U
C393 0.1U
C387 22U/10V
L24
BLM21A05
C379 0.1U
CLK_VDD
U20
ICS951402
TSSOP48-8_1-5-K
CPUCLK_EXT_R R186 33 R180 49.9 1%
CPUCLK#_EXT_R R185 33 R179 49.9 1%
NBCLK_EXT_R R188 33 R182 49.9 1%
NBCLK#_EXT_R R187 33 R181 49.9 1%
NB_DDRCLK_EXT_R R189 33
AGPCLK0_EXT_R R184 33
PCI_SEL66/33#
R46 0
R47 *0
FS3 R203 33
FS4
USBCLK_EXT_R R183 *33
FS0 R216 33
FS1 R215 33
FS2 R45 33
R220 *2.2K
R219 *2.2K
R218 *2.2K
R198 *2.2K
R208 *2.2K
SB_OSC R50 10K FS0
14M_SIO R49 10K FS1
FS2 R214 10K FS2
ALINK_CLK R205 10K FS3
FS4 R209 10K FS4
C498 10P
C483 10P
Y3
14.318MHz_20PPM
R213 1M
R48 0
SCLK0
SDATA0
IMVP_PWG
R212 0
EXT_CLKEN
-NB_CPUSTP
-PCISTP
R53 0
R210 0
R211 *10K
Ioh = 5 * Iref
(2.32mA)
Voh = 0.71V @ 60 ohm
R52 475_1%
CLK FREQ
QUANTA COMPUTER
Title
MEM CLK BUFFER/EXT CLK GEN
Size B
Document Number
NR2 Main Board
Rev 1A
Date: 星期一, 五月 24, 2004
Sheet 15 of 40

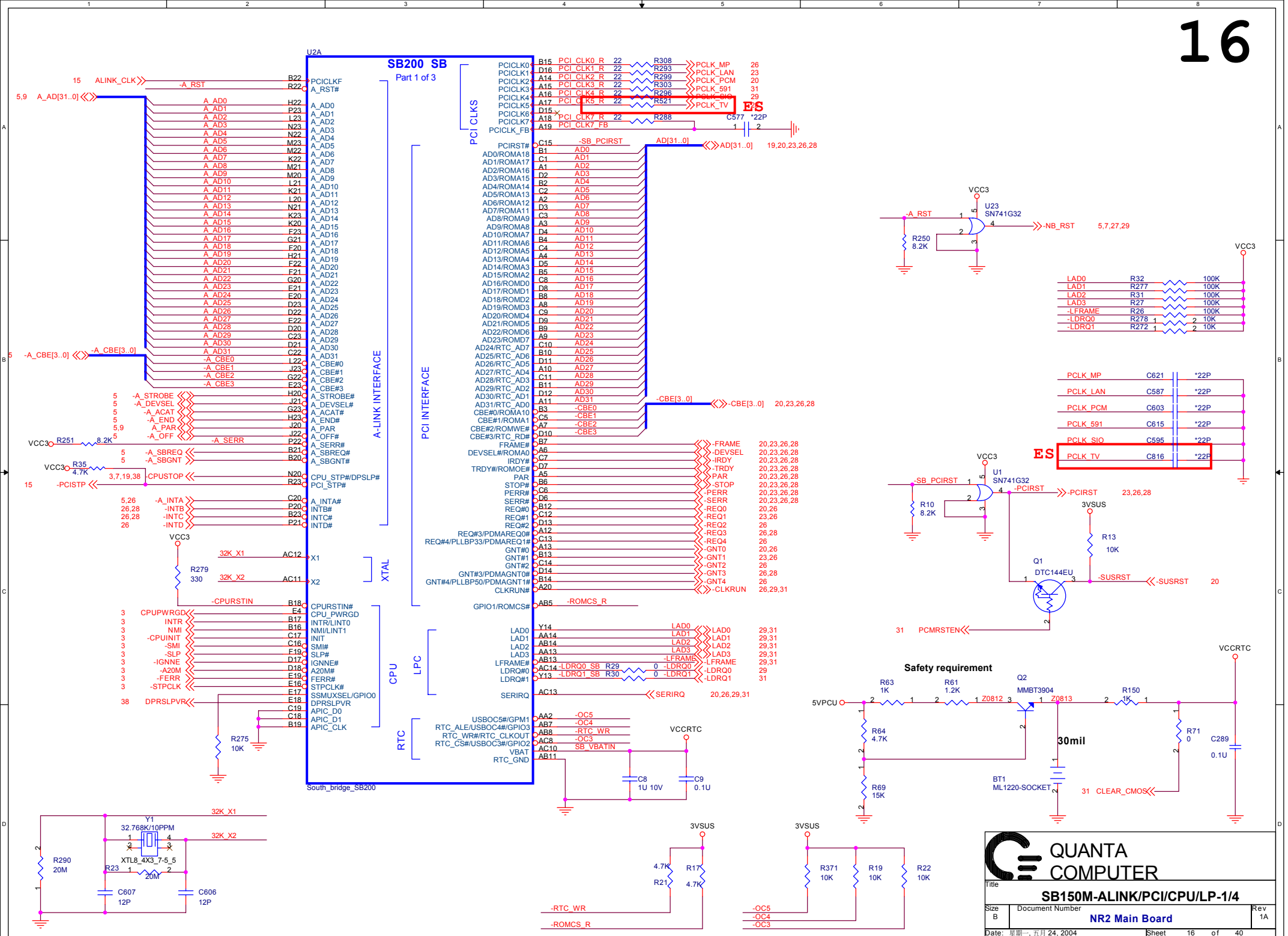
U2A
SB200 SB
Part 1 of 3
A-LINK INTERFACE
PCI INTERFACE
PCI CLKS
XTAL
CPU
LPC
RTC
South_bridge_SB200
ALINK_CLK
A_AD[31..0]
A_CBE[3..0]
PCI_CLK0_R
PCI_CLK1_R
PCI_CLK2_R
PCI_CLK3_R
PCI_CLK4_R
PCI_CLK5_R
PCI_CLK7_R
PCI_CLK7_FB
PCLK_MP
PCLK_LAN
PCLK_PCM
PCLK_591
PCLK_SIO
PCLK_TV
ES
AD[31..0]
19,20,23,26,28
-CBE[3..0]
20,23,26,28
-FRAME
-DEVSEL
-IRDY
-TRDY
-STOP
-PERR
-SERR
-REQ0
-REQ1
-REQ2
-REQ3
-REQ4
-GNT0
-GNT1
-GNT2
-GNT3
-GNT4
-CLKRUN
-ROMCS_R
LAD0
LAD1
LAD2
LAD3
-LFRAME
-LDRQ0
-LDRQ1
SERIRQ
20,26,29,31
-OC5
-OC4
-RTC_WR
-OC3
SB_VBATIN
VCCRTC
C8
1U 10V
C9
0.1U
C577
*22P
VCC3
U23
SN741G32
-A_RST
-NB_RST
5,7,27,29
R250
8.2K
R32
R277
R31
R27
R26
R278
R272
100K
10K
PCLK_MP
PCLK_LAN
PCLK_PCM
PCLK_591
PCLK_SIO
PCLK_TV
C621
C587
C603
C615
C595
C816
U1
-SB_PCIRST
-PCIRST
23,26,28
R10
8.2K
3VSUS
R13
10K
Q1
DTC144EU
-SUSRST
20
PCMRSTEN
Safety requirement
5VPCU
R63
1K
R61
1.2K
Q2
MMBT3904
Z0812
Z0813
R150
1K
R64
4.7K
R69
15K
30mil
BT1
ML1220-SOCKET
CLEAR_CMOS
R71
0
C289
0.1U
VCCRTC
Y1
32.768K/10PPM
XTL8_4X3_7-5_5
32K_X1
32K_X2
R290
20M
R23
20M
C607
12P
C606
12P
R275
10K
R279
330
R17
4.7K
R21
4.7K
R371
10K
R19
10K
R22
10K
-RTC_WR
-ROMCS_R
-OC5
-OC4
-OC3
QUANTA
COMPUTER
Title
SB150M-ALINK/PCI/CPU/LP-1/4
Size
B
Document Number
NR2 Main Board
Rev
1A
Date: 星期一, 五月 24, 2004
Sheet 16 of 40

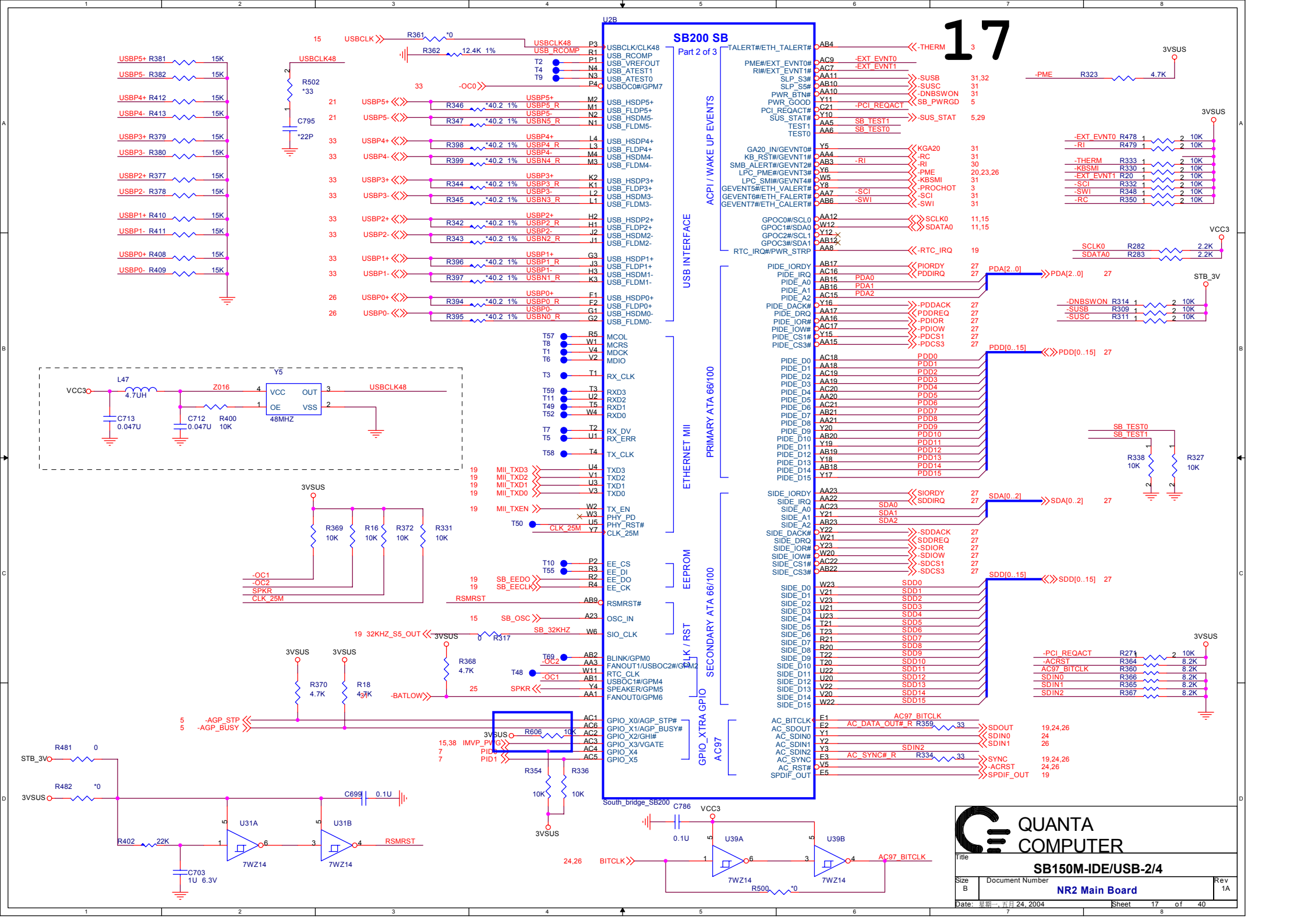
17
SB200 SB
Part 2 of 3
U2B
USB INTERFACE
ACPI / WAKE UP EVENTS
ETHERNET MII
PRIMARY ATA 66/100
SECONDARY ATA 66/100
EEPROM
CLK / RST
GPIO_XTRA GPIO
AC97
South_bridge_SB200
QUANTA COMPUTER
Title
SB150M-IDE/USB-2/4
Size B
Document Number
NR2 Main Board
Rev 1A
Date: 星期一, 五月 24, 2004
Sheet 17 of 40

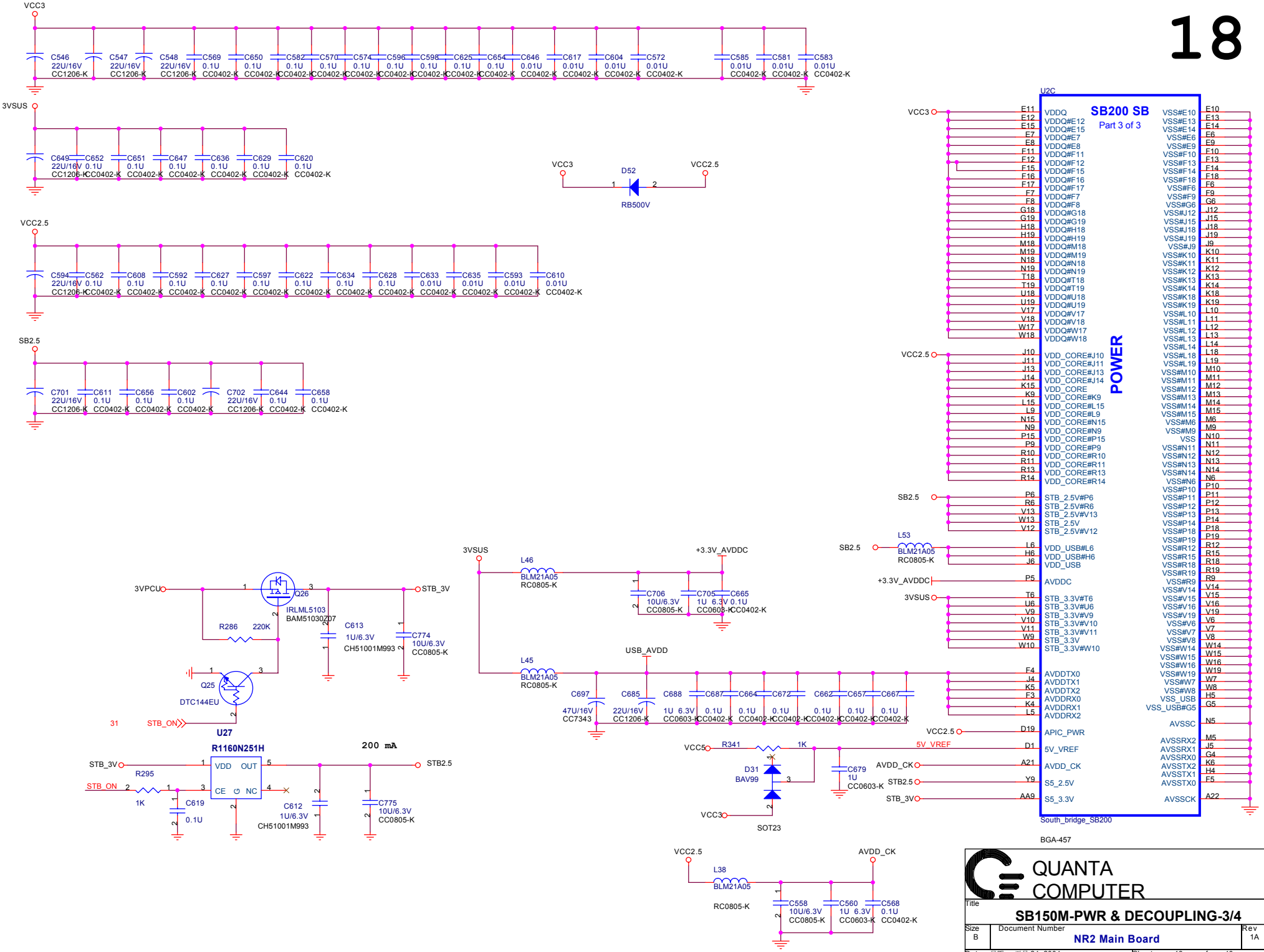

QUANTA COMPUTER

Title: **SB150M-PWR & DECOUPLING-3/4**

Size: B | Document Number: **NR2 Main Board** | Rev: 1A

Date: 星期一, 五月 24, 2004 | Sheet 18 of 40

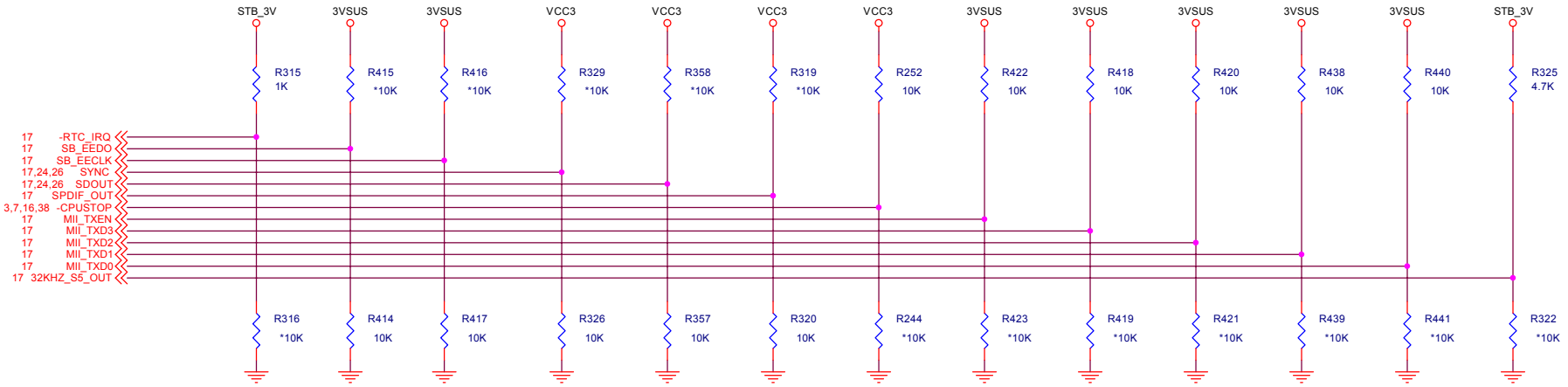

	ACPWRON	EEDO	EECK	SYNC	SDOUT	SPDIF_OUT	-CPUSTOP	TX_EN	ETHERNET TXD[3:0]	32KHZ_S5
STRAP HIGH	MANUAL PWR ON DEFAULT	USE DEBUG STRAPS DEFAULT	ROM ON PCI BUS	INIT ACTIVE HIGH	33MHz NB BUS	SIO 24MHz	ENABLE SPEED STEP DEFAULT	DISABLE CPU FREQ SETTING DEFAULT	PROCESSOR FREQ MULTIPLIER	32KHZ OUTPUT FROM SB200 (INT RTC) DEFAULT
STRAP LOW	AUTO PWR ON	IGNORE DEBUG STRAPS	ROM ON LPC BUS DEFAULT	INIT ACTIVE LOW (PIII) DEFAULT	HI SPEED A-LINK DEFAULT	SIO 48MHz DEFAULT	DISABLE SPEED STEP	ENABLE CPU FREQSETTING		32KHZ INPUT TO SB200 (EXT RTC)

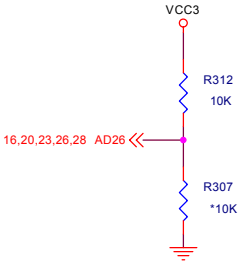

AD26
BIOS use LPC cycle DEFAULT
BIOS uSE FWH Cycle

QUANTA COMPUTER

Title: SB150M-STRAPS-4/4

Size: B | Document Number: NR2 Main Board | Rev: 1A

Date: 星期一, 五月 24, 2004 | Sheet 19 of 40

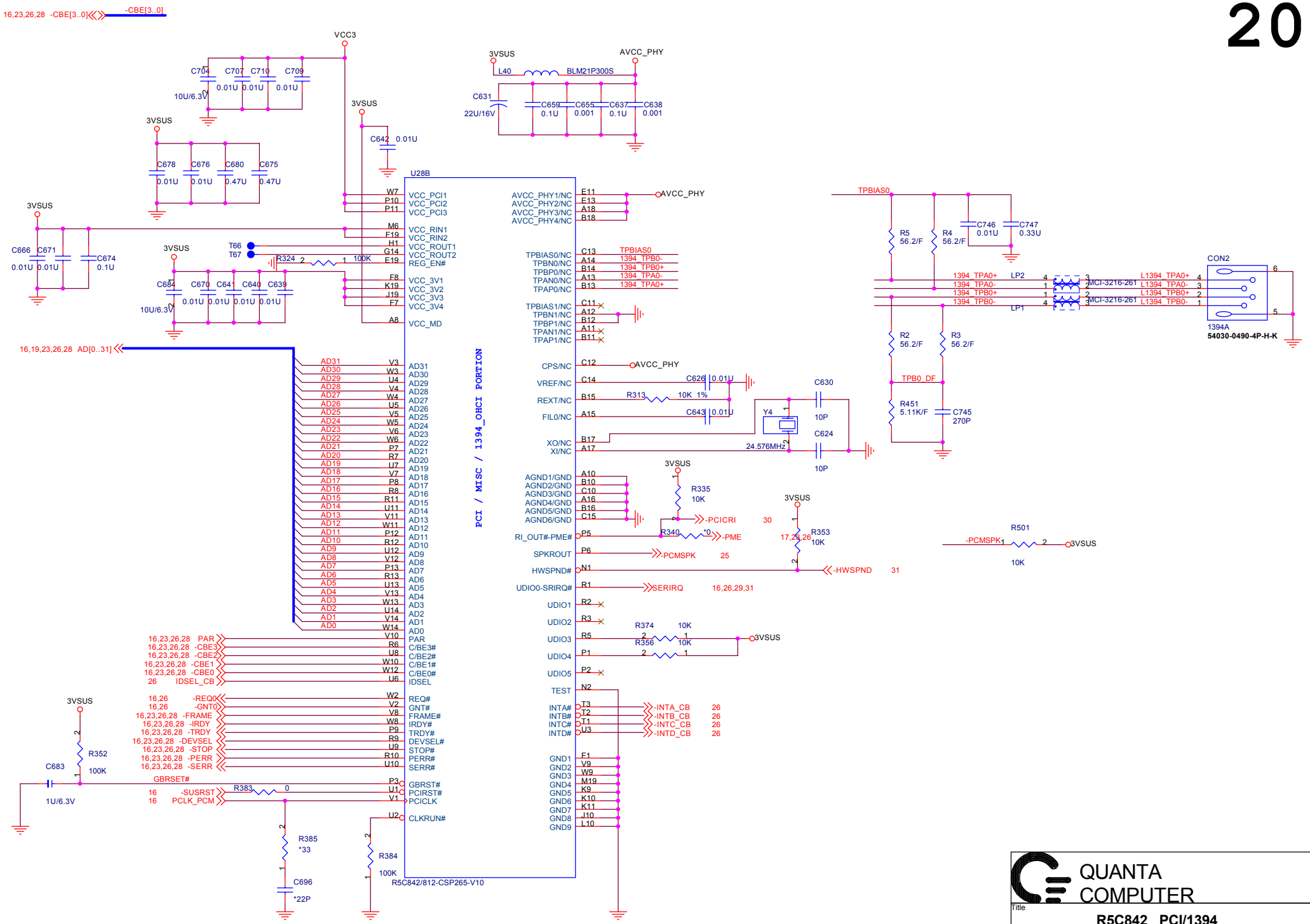

QUANTA COMPUTER

Title: R5C842_ PCI/1394

Size: B | Document Number: NR2 Main Board | Rev: 1A

Date: 星期一, 五月 24, 2004 | Sheet 20 of 40

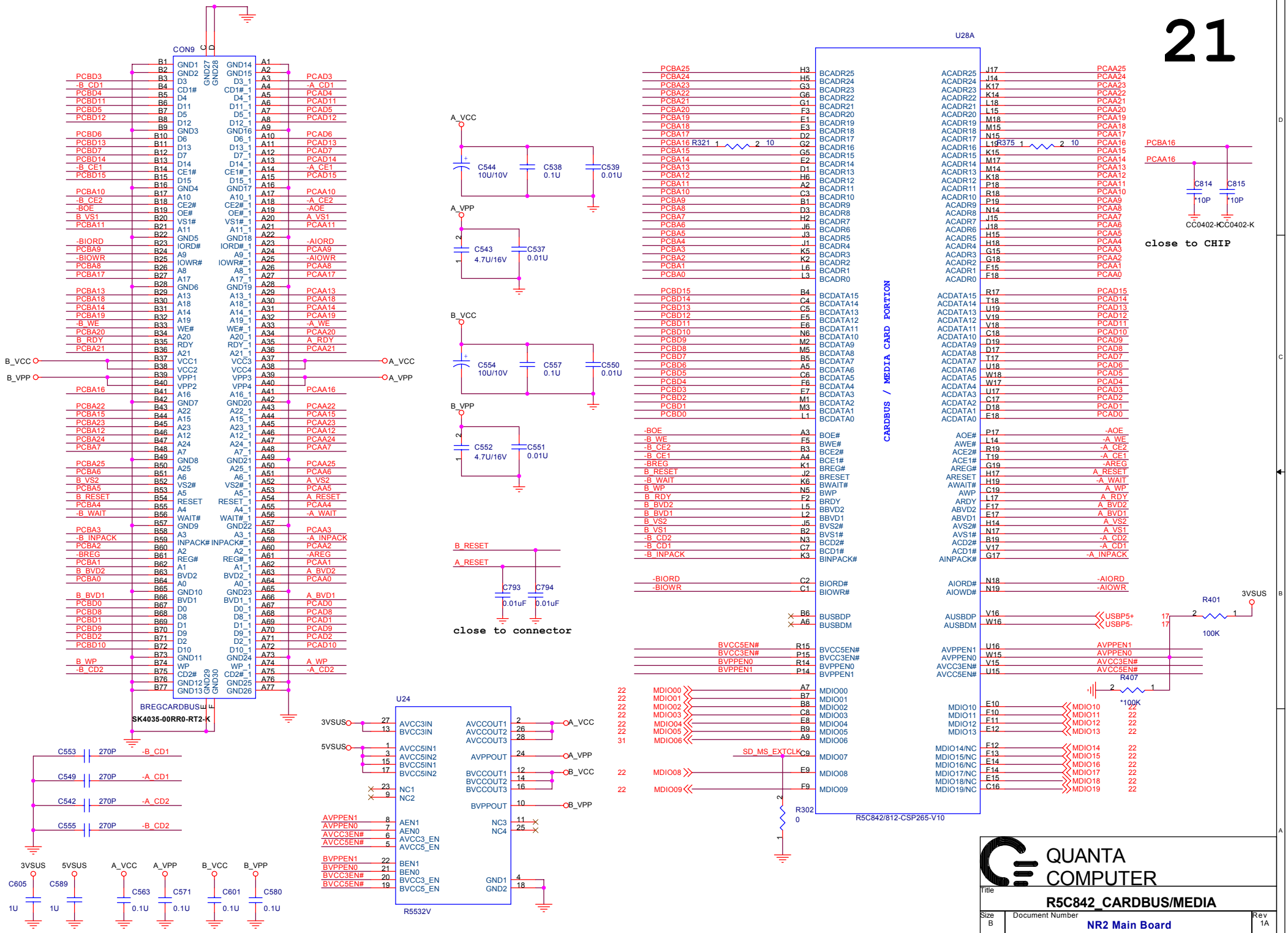
CON9
SK4035-00RR0-RT2-K
BREGCARDBUS
U28A
CARDBUS / MEDIA CARD PORTION
R5C842/812-CSP265-V10
U24
R5532V
close to CHIP
close to connector
QUANTA COMPUTER
R5C842_CARDBUS/MEDIA
NR2 Main Board
Rev 1A
Sheet 21 of 40
Date: 星期一, 五月 24, 2004

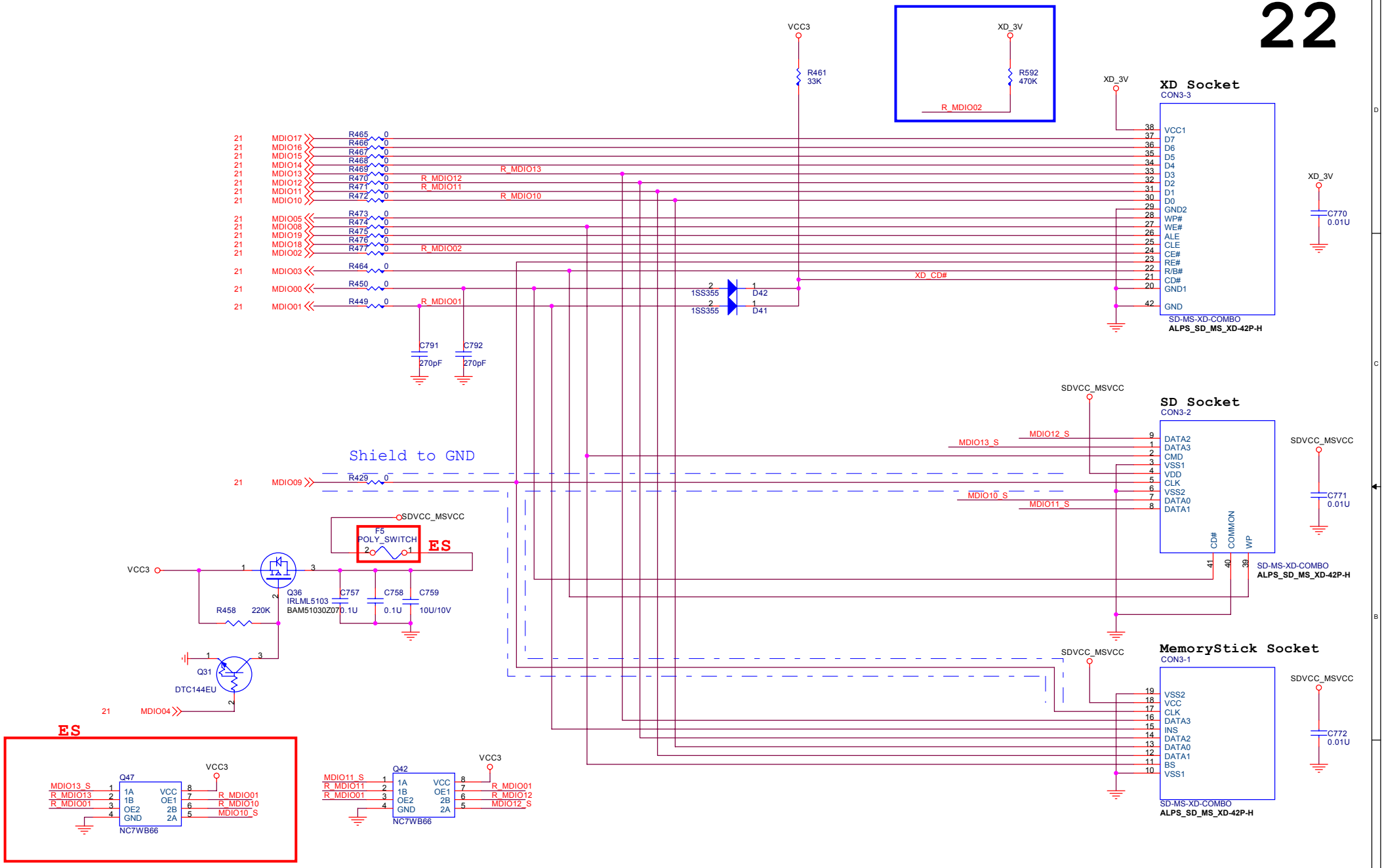

QUANTA COMPUTER

RICOH COMPANY,LTD.

Title: SD_MS_XD SLOT

Size: B | Document Number: NR2 Main Board | Rev: A

Date: 星期一, 五月 24, 2004 | Sheet 22 of 40

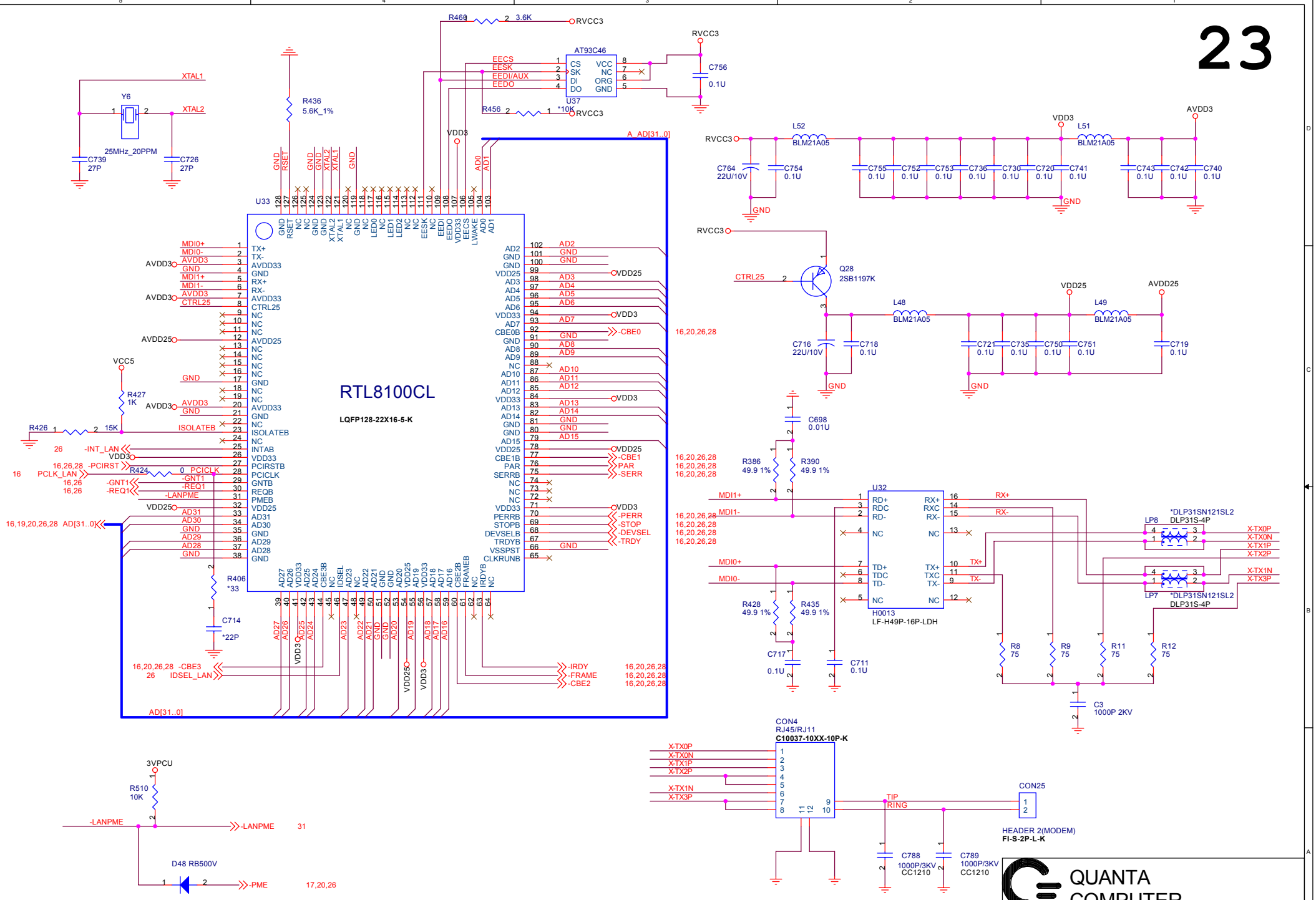

QUANTA COMPUTER

Title: LAN-2(RTL8100C)

Size: Custom | Document Number: NR2 Main Board | Rev: 1A

Date: 星期一, 五月 24, 2004 | Sheet 23 of 40

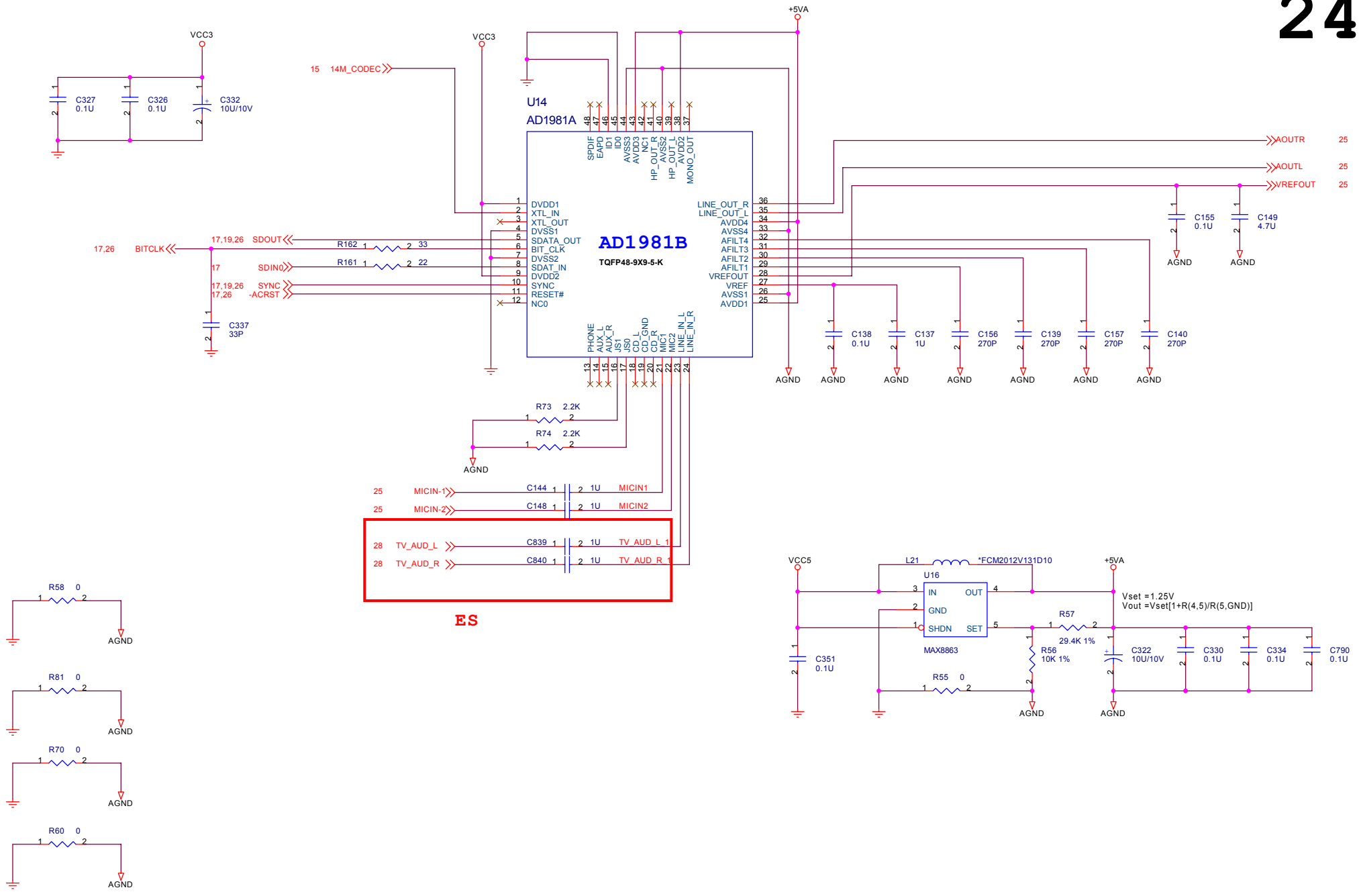

QUANTA COMPUTER

Title: AUDIO CODEC_AD1981B

Size: B | Document Number: NR2 Main Board | Rev: 1A

Date: 星期一, 五月 24, 2004 | Sheet 24 of 40

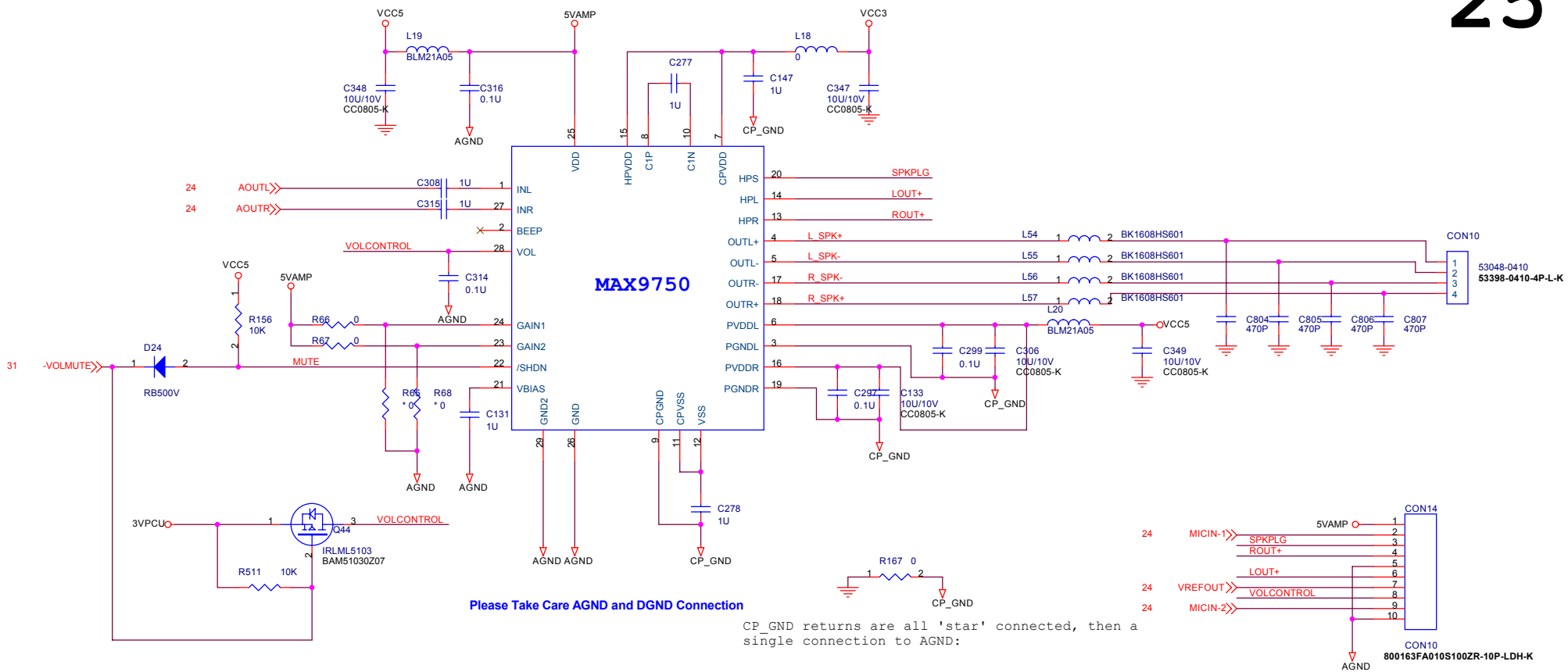

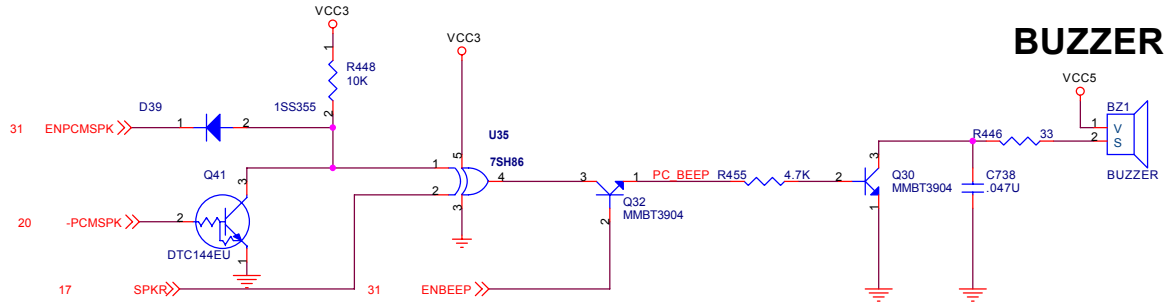

QUANTA COMPUTER

Title	AMP_MAX9750& INT.SPEAKER	
Size B	Document Number NR2 Main Board	Rev 1A
Date: 星期一, 五月 24, 2004	Sheet 25 of 40	

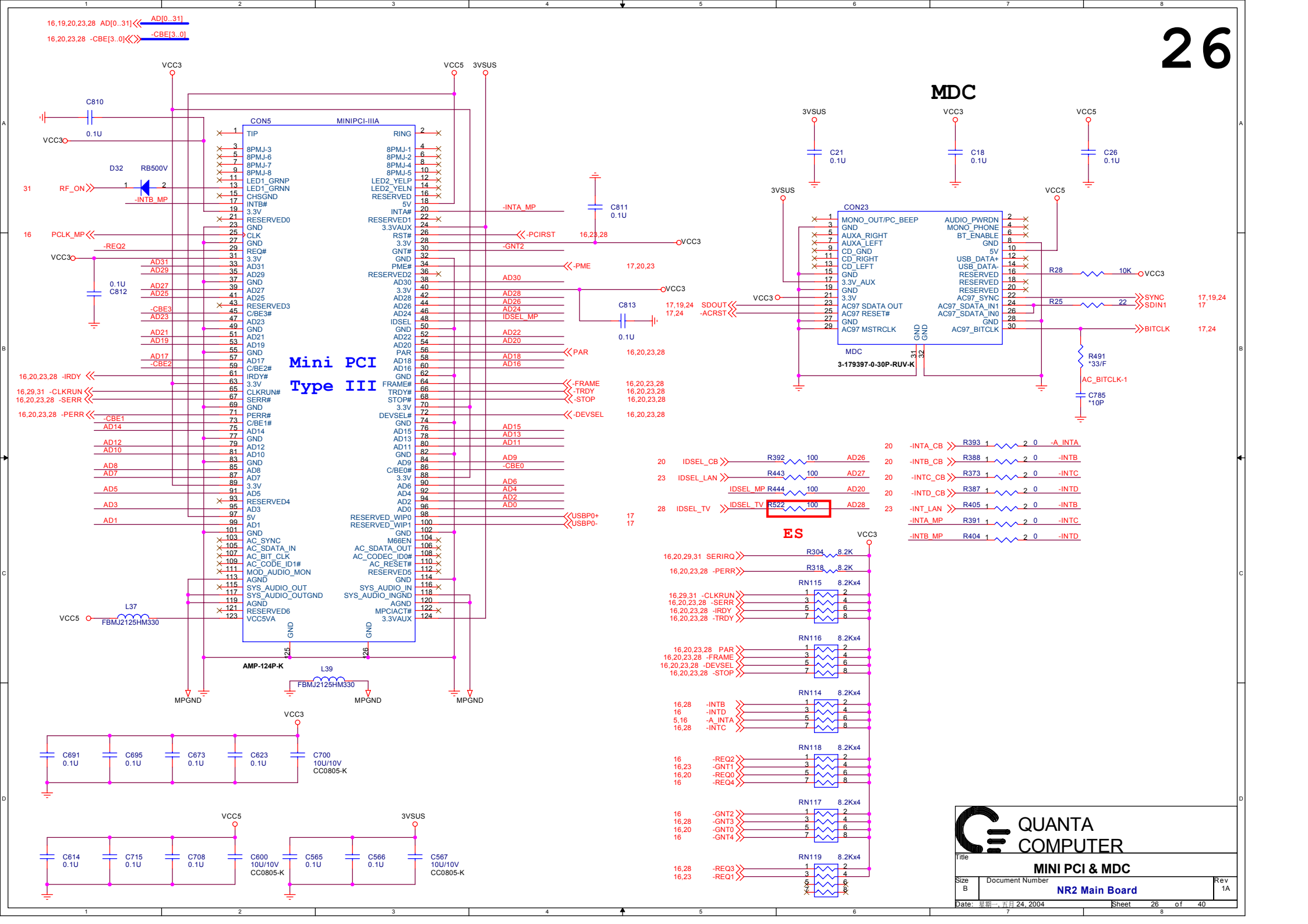
Mini PCI
Type III
CON5
MINIPCI-IIIA
AMP-124P-K
MDC
CON23
3-179397-0-30P-RUV-K
ES
QUANTA COMPUTER
Title
MINI PCI & MDC
Size B
Document Number
NR2 Main Board
Rev 1A
Date: 星期一, 五月 24, 2004
Sheet 26 of 40

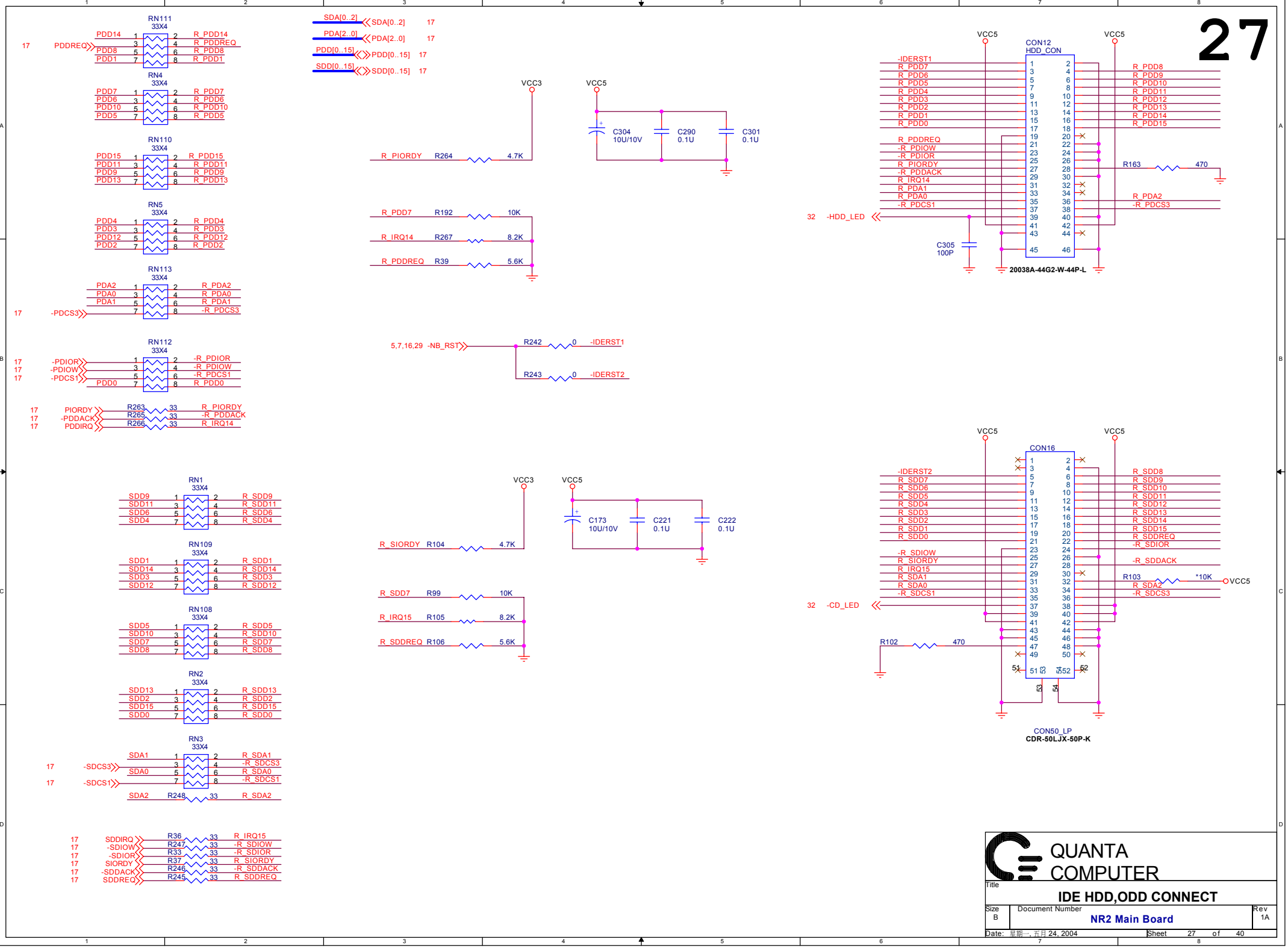

QUANTA COMPUTER

Title: **IDE HDD,ODD CONNECT**

Size: B | Document Number: **NR2 Main Board** | Rev: 1A

Date: 星期一, 五月 24, 2004 | Sheet 27 of 40

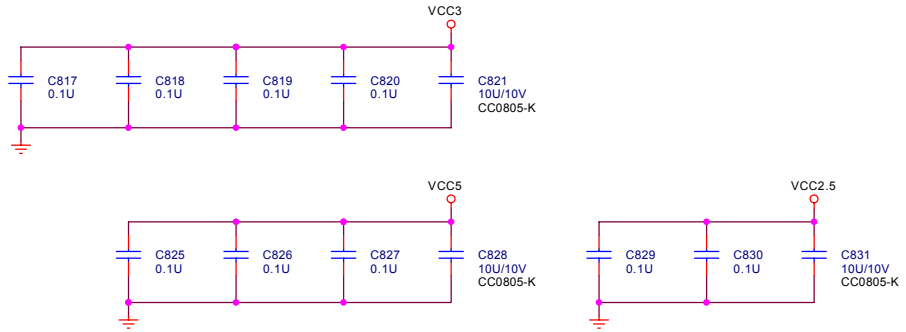

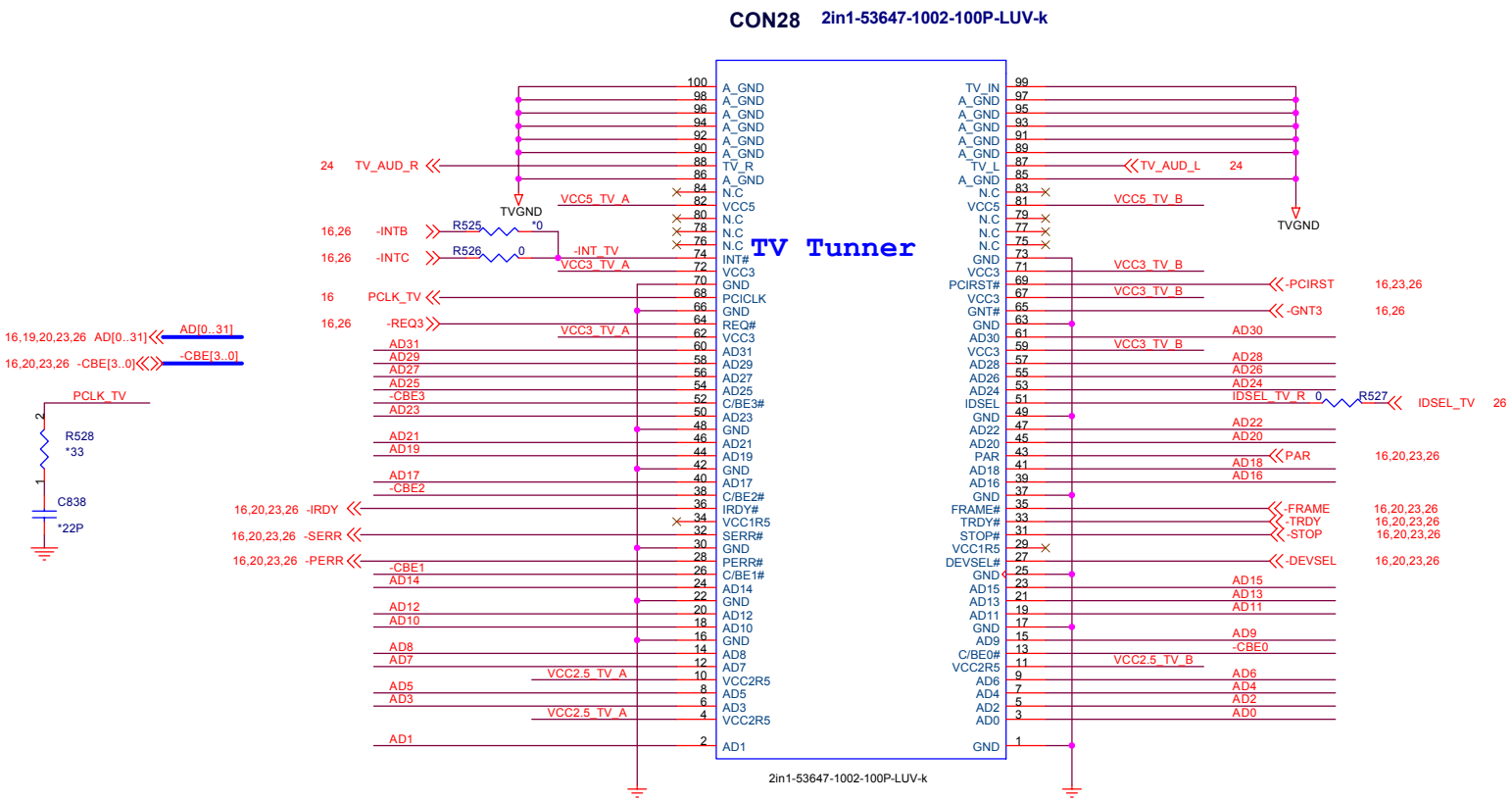

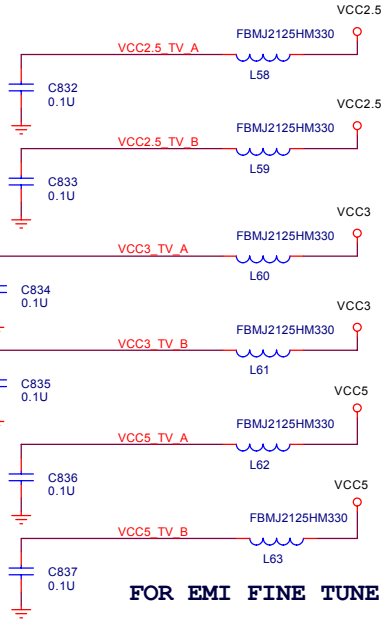

VCC5:240mA
VCC3:520mA
VCC2.5:560mA
VCC1.5:0mA(Not used)

Power Consumption description :
5V = ? W ;
3V = ? W ;
2.5V = ? W ;
1.5V = 0 W .

QUANTA COMPUTER

Title	TV TUNNER MODULE	
Size B	Document Number NR2 Main Board	Rev A
Date: 星期一, 五月 24, 2004	Sheet 28 of 40	

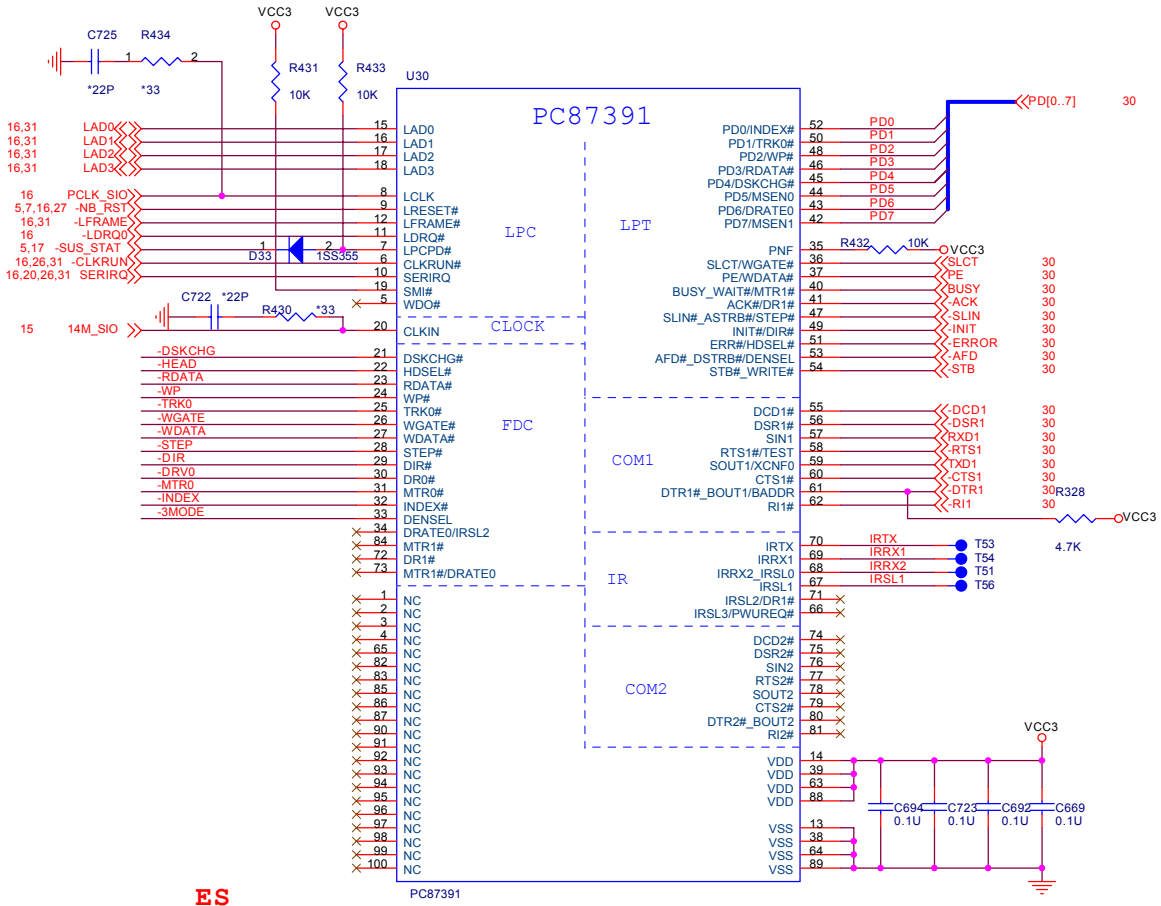

ES

FDD

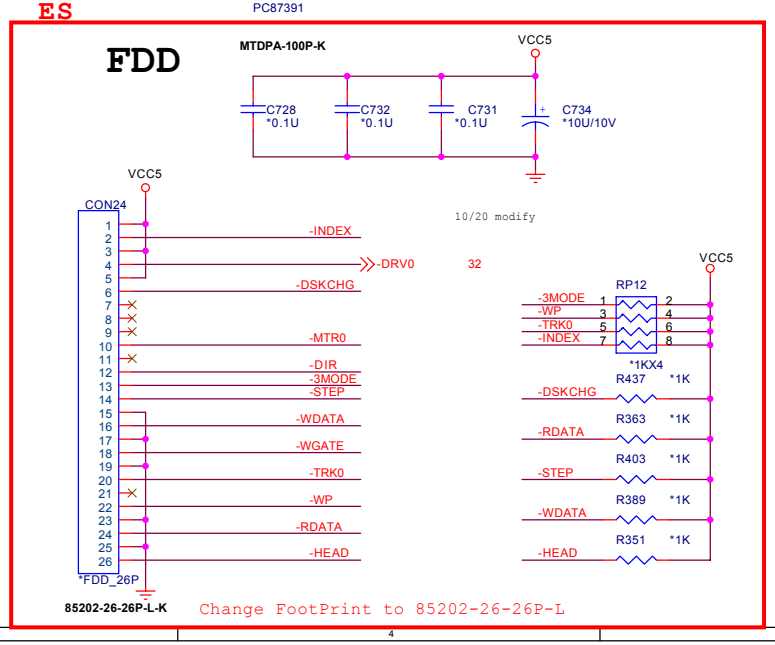

PS/2 PORT

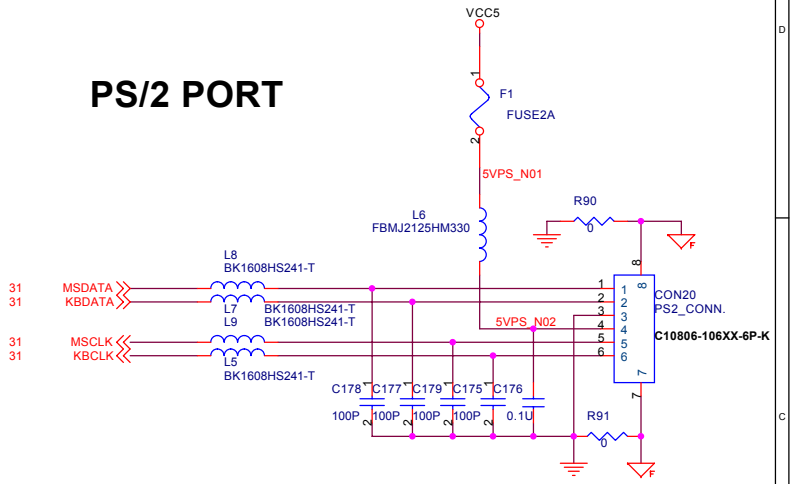

QUANTA COMPUTER

Title	SUPER I/O_NS87391	
Size B	Document Number NR2 Main Board	Rev 1A
Date: 星期一, 五月 24, 2004	Sheet 29 of 40	

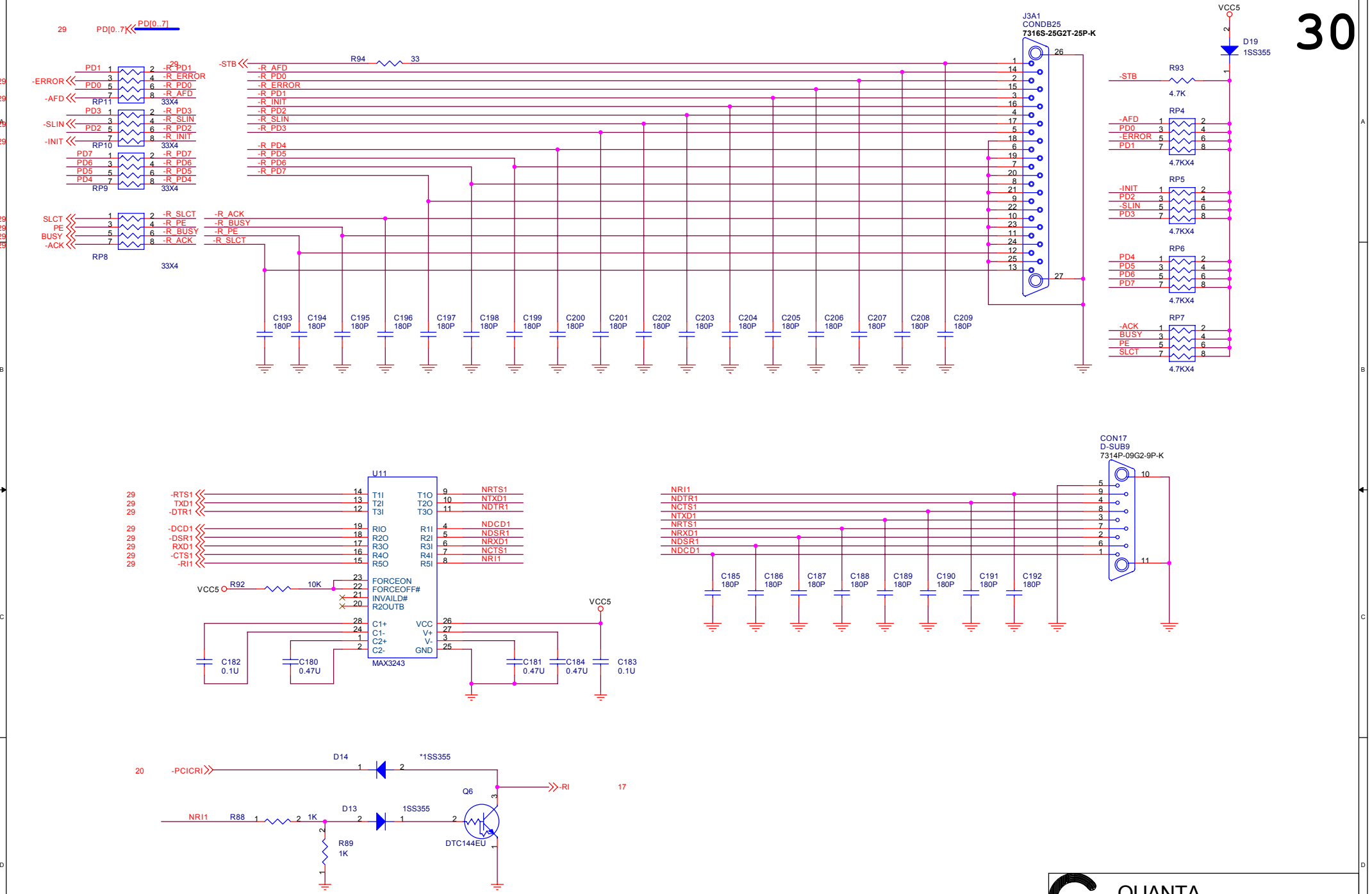

QUANTA COMPUTER

Title: **PARALLEL/SERIAL PORT**

Size	Document Number	Rev
B	**NR2 Main Board**	1A

Date: 星期一, 五月 24, 2004 Sheet 30 of 40

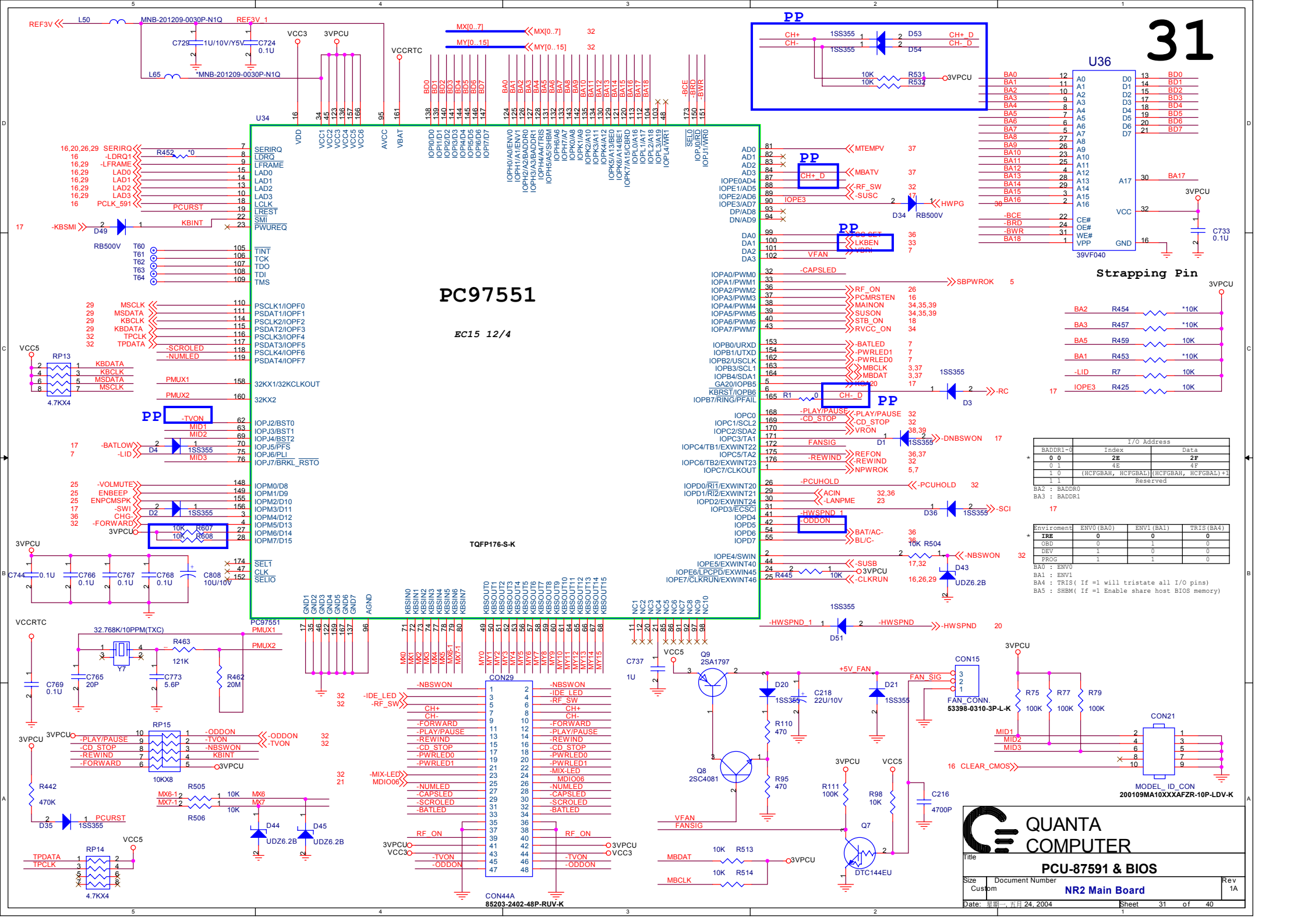
PC97551
EC15 12/4
TQFP176-S-K
U34
U36
39VF040
Strapping Pin
CON29
CON44A
85203-2402-48P-RUV-K
CON15
FAN_CONN.
53398-0310-3P-L-K
CON21
MODEL_ID_CON
200109MA10XXXAFZR-10P-LDV-K
PP
QUANTA COMPUTER
PCU-87591 & BIOS
NR2 Main Board
Size Custom
Document Number
Rev 1A
Date: 星期一, 五月 24, 2004
Sheet 31 of 40

Int. keyboard

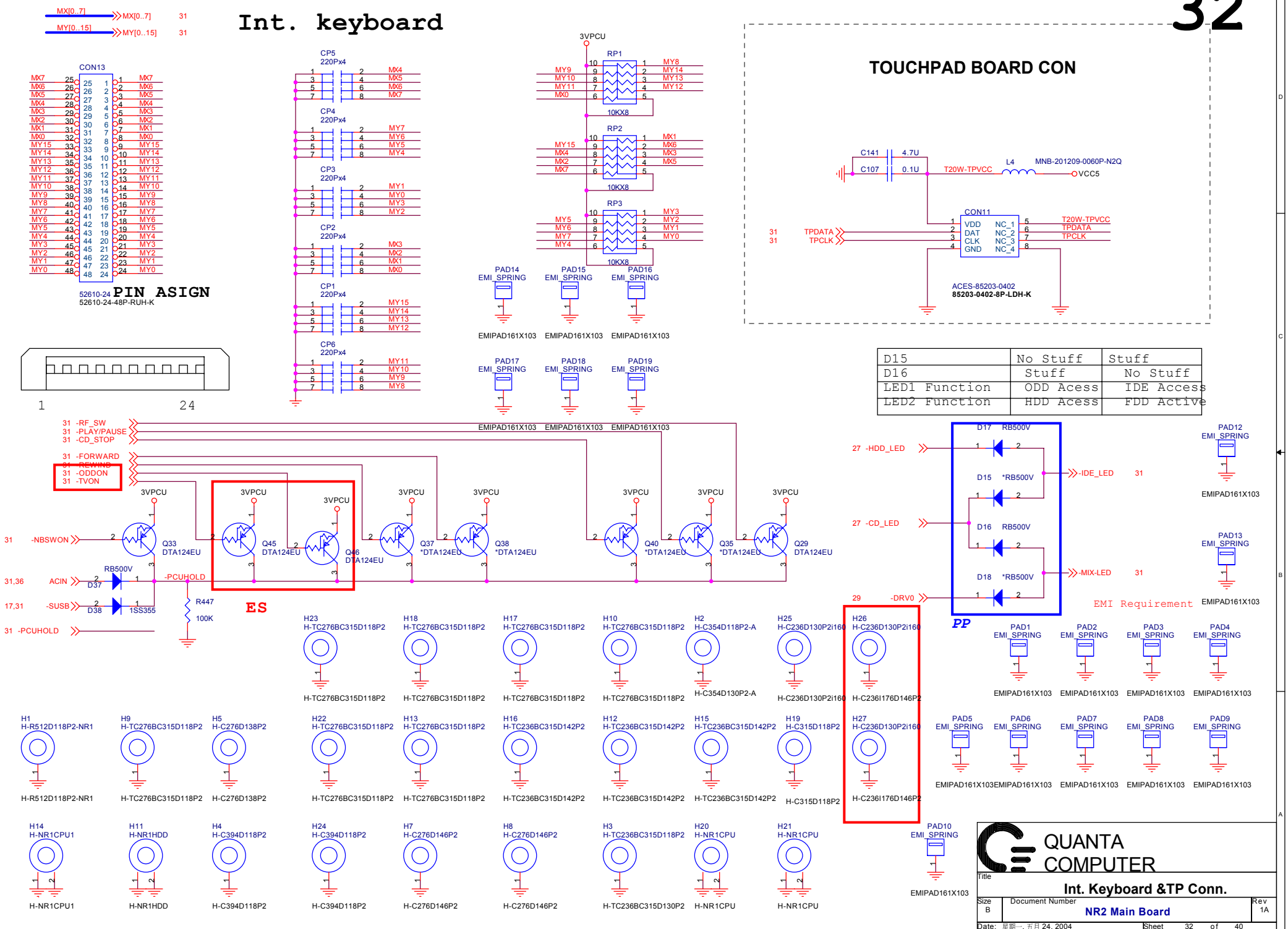

D15	No Stuff	Stuff
D16	Stuff	No Stuff
LED1 Function	ODD Acess	IDE Access
LED2 Function	HDD Acess	FDD Active

USB Power and Over current

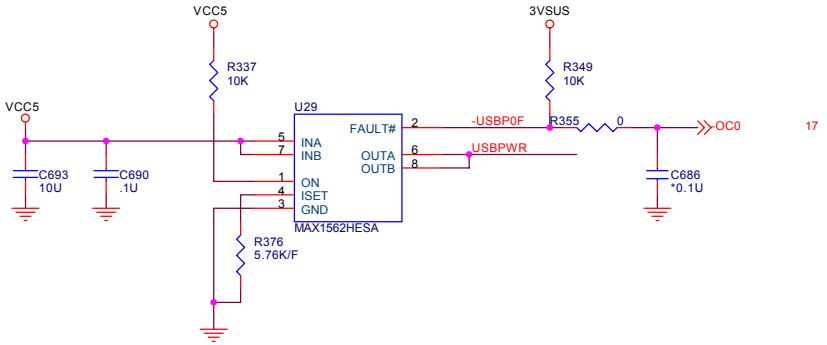

USB Connector

Place Near the USB Connector

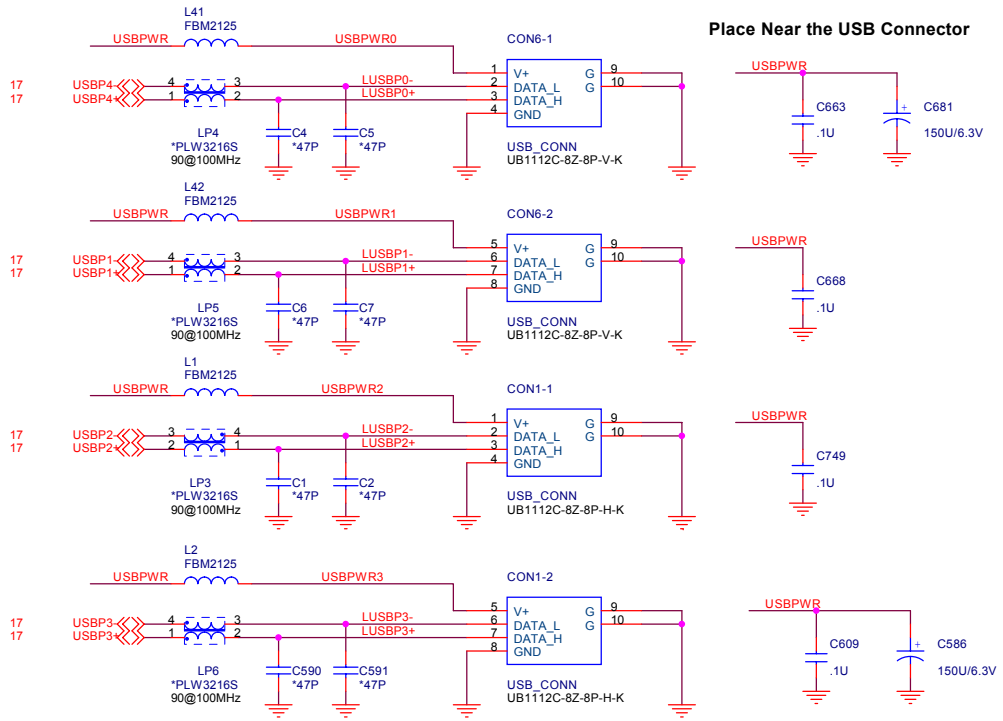

PP

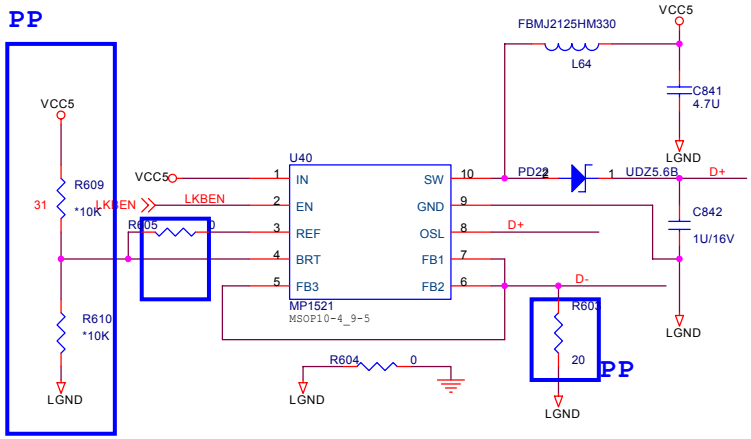

PP

Luminous K/B Power drive

4 LED:150mA<
6 LED:200mA<

PP

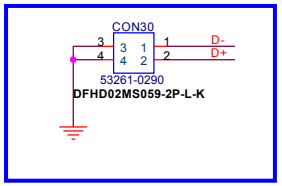

QUANTA COMPUTER

Title	USB_CONNECT&LKB_PWR_DRIVE	
Size B	Document Number NR2 Main Board	Rev 1A
Date: 星期一, 五月 24, 2004	Sheet 33 of 40	

DC/DC 3.3V&5V POWER

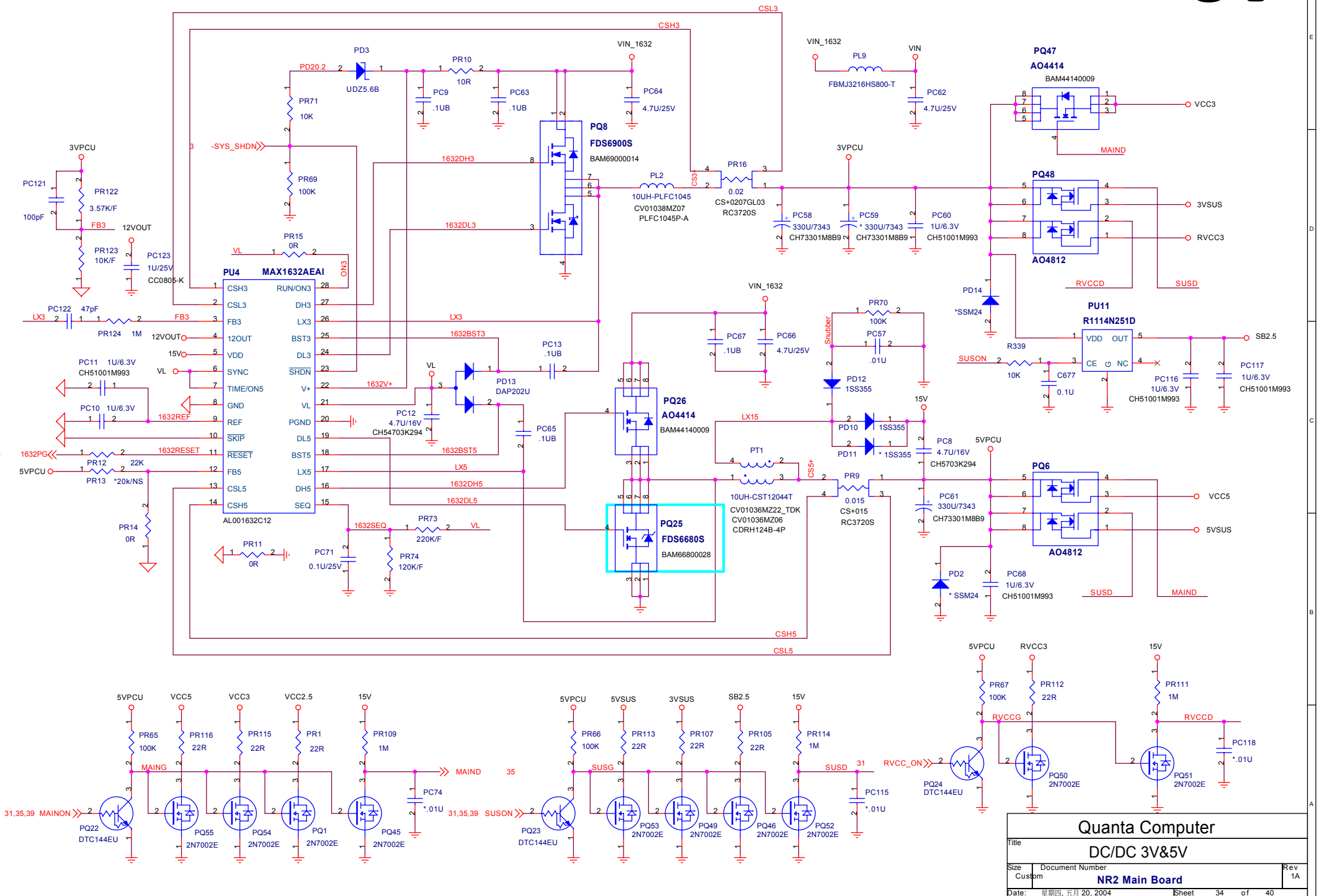

Quanta Computer

Title: DC/DC 3V&5V

Size: Custom | Document Number: NR2 Main Board | Rev: 1A

Date: 星期四, 五月 20, 2004 | Sheet 34 of 40

2.5V/1.5V & DDRVTT

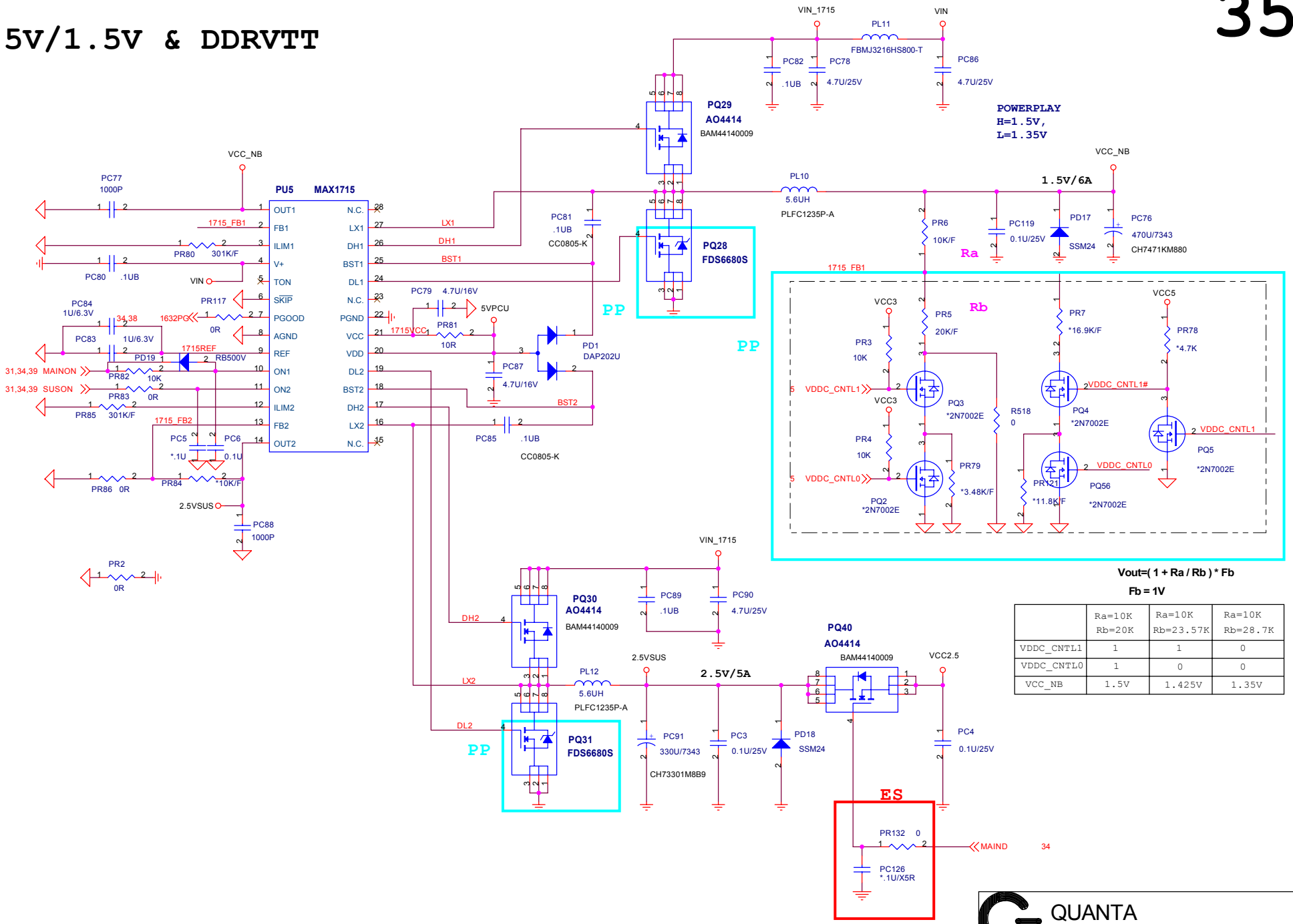

Vout=(1 + Ra / Rb) * Fb

Fb = 1V

	Ra=10K Rb=20K	Ra=10K Rb=23.57K	Ra=10K Rb=28.7K
VDDC_CNTL1	1	1	0
VDDC_CNTL0	1	0	0
VCC_NB	1.5V	1.425V	1.35V

QUANTA COMPUTER

Title: DC/DC 2.5/1.8/1.5VSUS

Size: B | Document Number: NR2 Main Board | Rev: 1A

Date: 星期一, 五月 24, 2004 | Sheet 35 of 40

Battery Charger

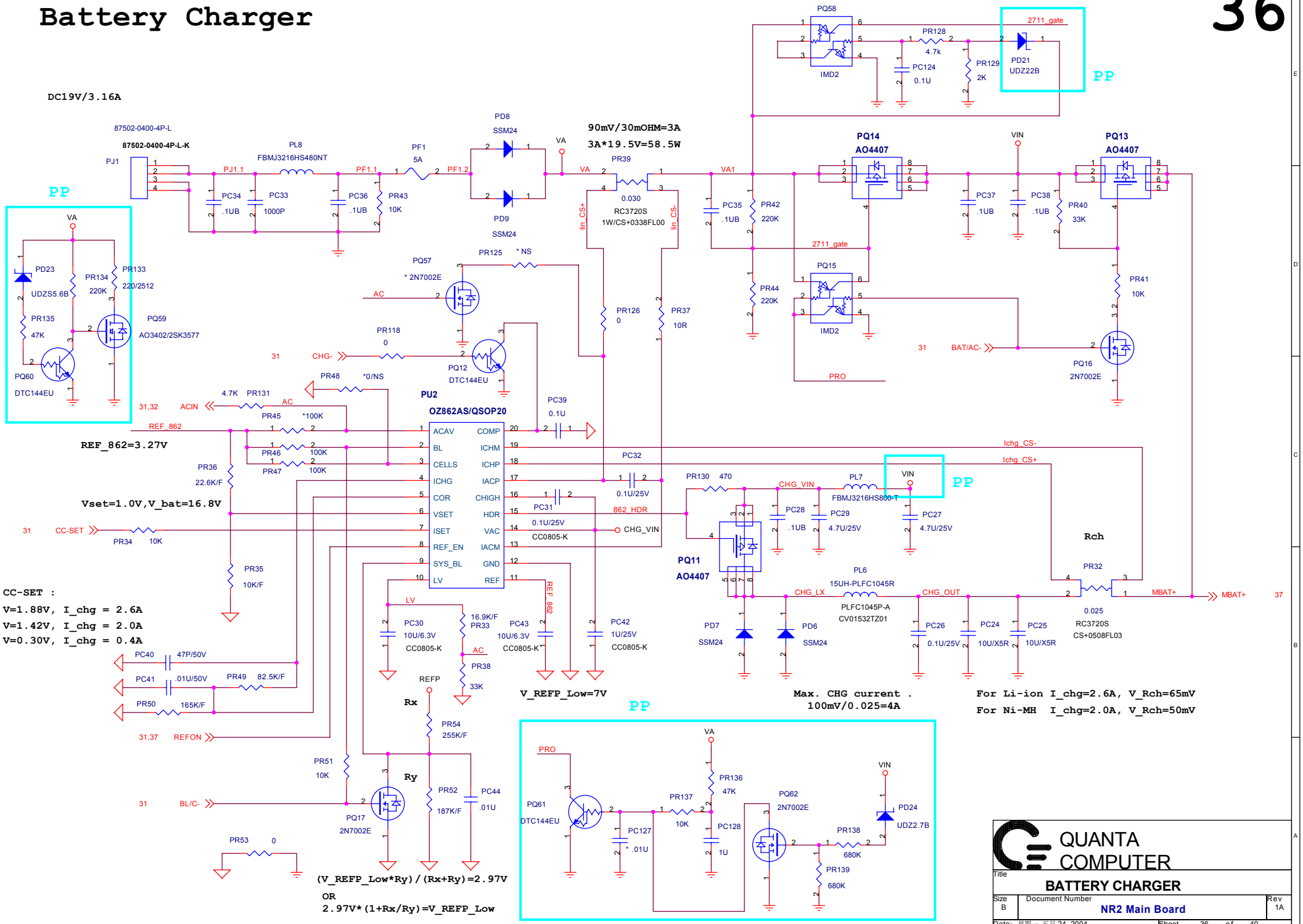

QUANTA COMPUTER

Title: BATTERY CHARGER

Size: B | Document Number: NR2 Main Board | Rev: 1A

Date: 星期一, 五月 24, 2004 | Sheet 36 of 40

Battery Connector

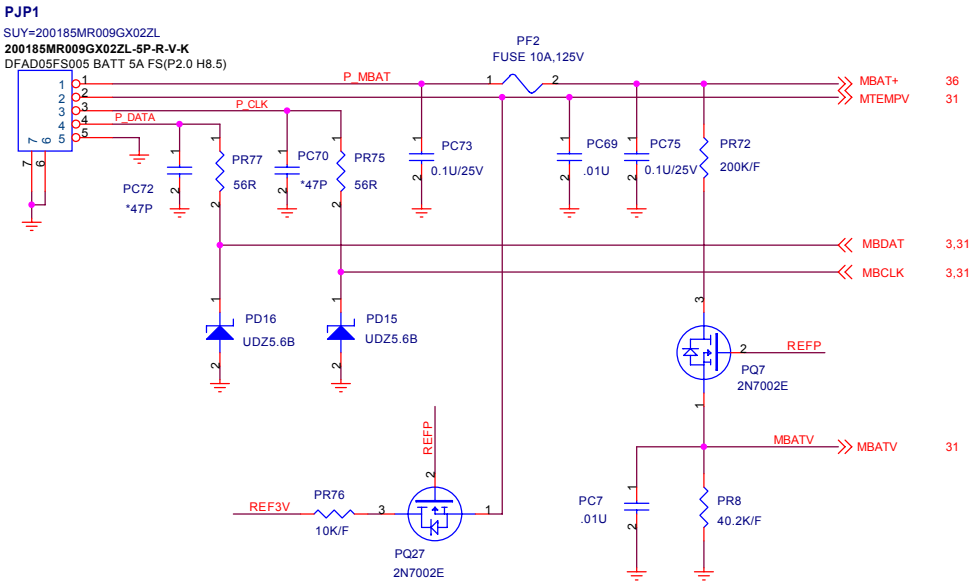

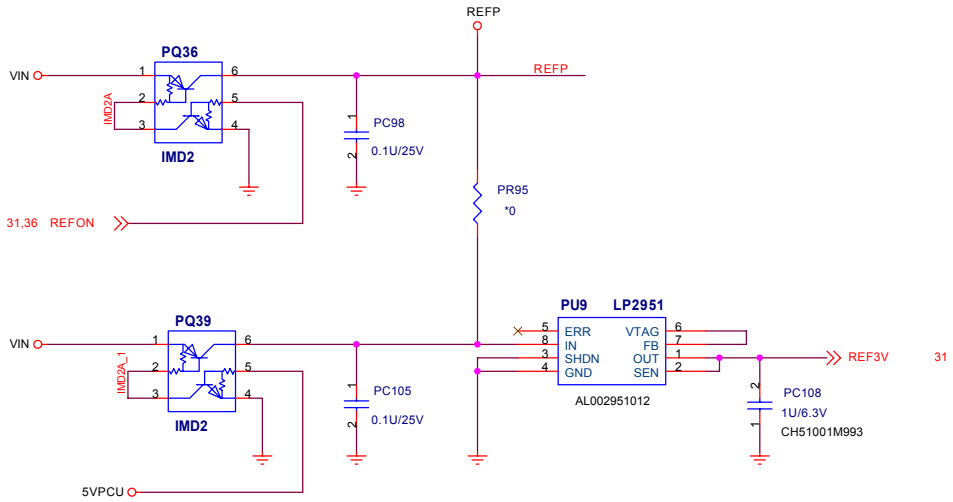

QUANTA COMPUTER

Title
BATTERY SELECTOR

Size	Document Number	Rev
B	NR2 Main Board	1A

Date: 星期一, 五月 24, 2004 Sheet 37 of 40

CPU CORE

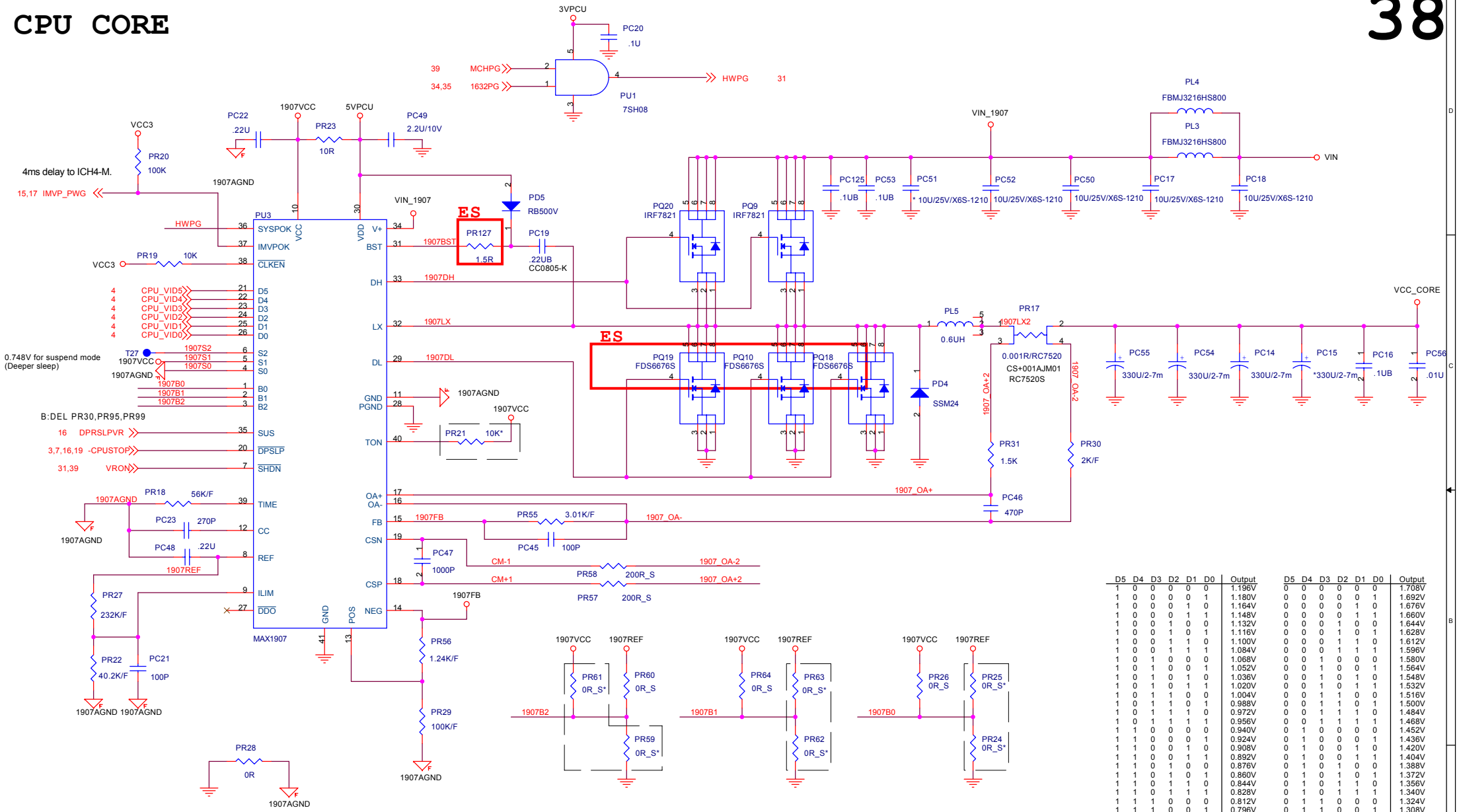

SUSPEND MODE (SUS=HIGH)

S2	S1	S0	Output
OPEN	VCC	GND	0.748V

VCC_BOOT

B2	B1	B0	Output
GND	GND	GND	1.708V
REF	REF	REF	1.372V
OPEN	OPEN	OPEN	1.036V
VCC	VCC	VCC	0.700V
REF	VCC	VCC	1.212V

D5	D4	D3	D2	D1	D0	Output	D5	D4	D3	D2	D1	D0	Output
1	0	0	0	0	0	1.196V	0	0	0	0	0	0	1.708V
1	0	0	0	0	1	1.180V	0	0	0	0	0	1	1.692V
1	0	0	0	1	0	1.164V	0	0	0	0	1	0	1.676V
1	0	0	0	1	1	1.148V	0	0	0	0	1	1	1.660V
1	0	0	1	0	0	1.132V	0	0	0	1	0	0	1.644V
1	0	0	1	0	1	1.116V	0	0	0	1	0	1	1.628V
1	0	0	1	1	0	1.100V	0	0	0	1	1	0	1.612V
1	0	0	1	1	1	1.084V	0	0	0	1	1	1	1.596V
1	0	1	0	0	0	1.068V	0	0	1	0	0	0	1.580V
1	0	1	0	0	1	1.052V	0	0	1	0	0	1	1.564V
1	0	1	0	1	0	1.036V	0	0	1	0	1	0	1.548V
1	0	1	0	1	1	1.020V	0	0	1	0	1	1	1.532V
1	0	1	1	0	0	1.004V	0	0	1	1	0	0	1.516V
1	0	1	1	0	1	0.988V	0	0	1	1	0	1	1.500V
1	0	1	1	1	0	0.972V	0	0	1	1	1	0	1.484V
1	0	1	1	1	1	0.956V	0	0	1	1	1	1	1.468V
1	1	0	0	0	0	0.940V	0	1	0	0	0	0	1.452V
1	1	0	0	0	1	0.924V	0	1	0	0	0	1	1.436V
1	1	0	0	1	0	0.908V	0	1	0	0	1	0	1.420V
1	1	0	0	1	1	0.892V	0	1	0	0	1	1	1.404V
1	1	0	1	0	0	0.876V	0	1	0	1	0	0	1.388V
1	1	0	1	0	1	0.860V	0	1	0	1	0	1	1.372V
1	1	0	1	1	0	0.844V	0	1	0	1	1	0	1.356V
1	1	0	1	1	1	0.828V	0	1	0	1	1	1	1.340V
1	1	1	0	0	0	0.812V	0	1	1	0	0	0	1.324V
1	1	1	0	0	1	0.796V	0	1	1	0	0	1	1.308V
1	1	1	0	1	0	0.780V	0	1	1	0	1	0	1.292V
1	1	1	0	1	1	0.764V	0	1	1	0	1	1	1.276V
1	1	1	1	0	0	0.748V	0	1	1	1	0	0	1.260V
1	1	1	1	0	1	0.732V	0	1	1	1	0	1	1.244V
1	1	1	1	1	0	0.716V	0	1	1	1	1	0	1.228V
1	1	1	1	1	1	0.700V	0	1	1	1	1	1	1.212V

QUANTA COMPUTER

Title: CPU CORE

Size: A3 | Document Number: NR2 Main Board | Rev: 1A

Date: 星期一, 五月 24, 2004 | Sheet 38 of 40

VCCP 1.05V/1.8V/1.5V/DDR_VTT

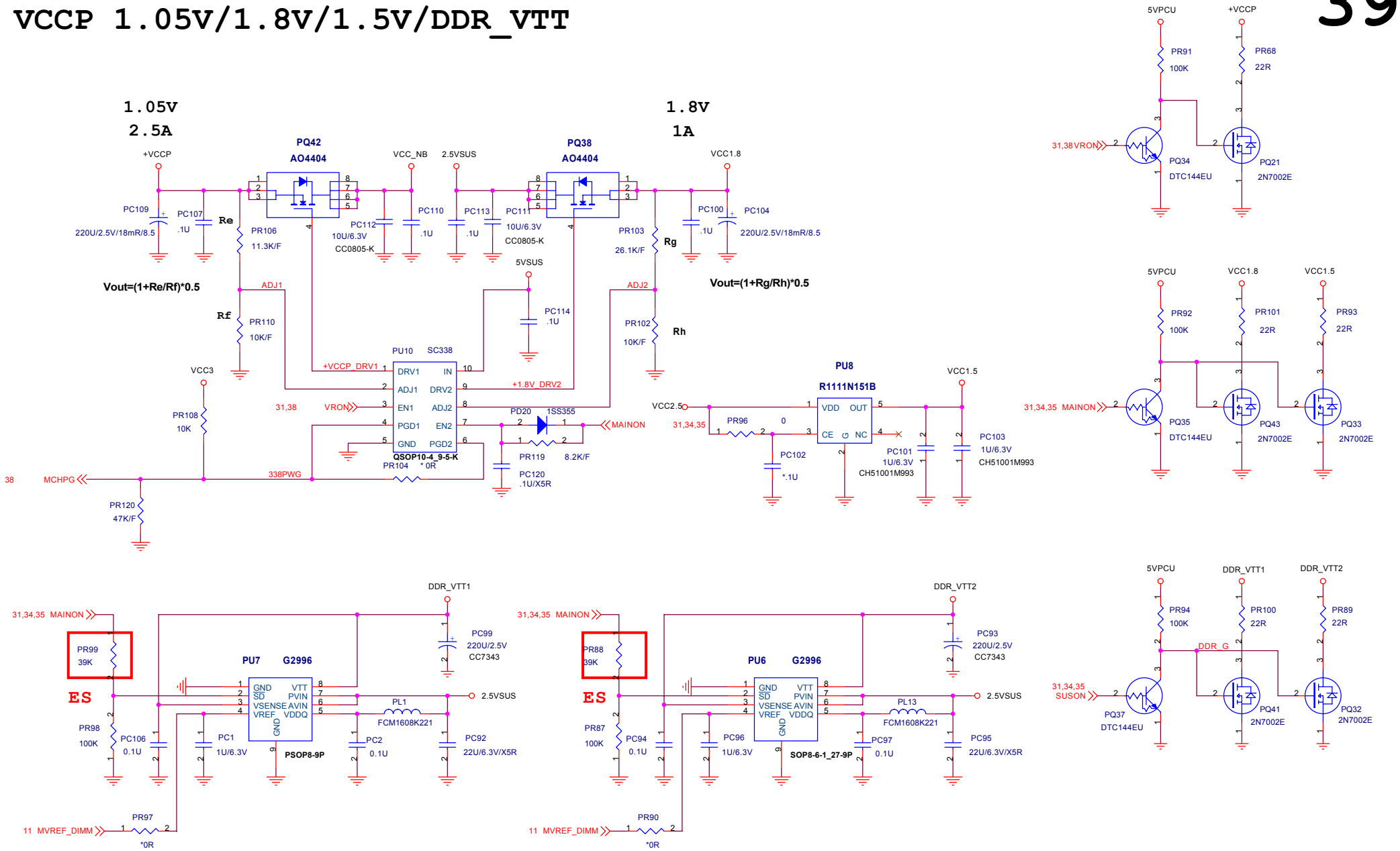

QUANTA COMPUTER

Title: VCCP/ 1.8V & VGA Power 1.5V&1.35V

Size: B | Document Number: NR2 Main Board | Rev: 1A

Date: 星期一, 五月 24, 2004 | Sheet 39 of 40

ES stage
PAGE_03:Add parts:R566,C873
PAGE_04:Add:Nomount location:R593,R595 for CPU auto detect function
PAGE_05:Modify EDID source del:Q22,Q23 Add:R516,R517
PAGE_09:(1)Add:R598,D56 for CPU auto detect function
(2)Add:Nomount SW1 force CPU detect function
PAGE_14:Del TV TUNNER CON Del:CON26,CON27,Modify CRT connect from SMD type change to DIP type
PAGE_15:(1)Layout modify Memory buffer's parts package
(2)Add:R601,R602,D58 for CPU auto detect function
PAGE_16:Add TV TUNNER CLK Add:R521,C816(Non-mount)
PAGE_17:Add D53,D54,R533,R534,Add:CH-,CH+ GPIO Function
PAGE_22:Add F5,Q47, MS Duo Application
PAGE_24:Add TV Audio source(TV_AUD_R,TV_AUD_L)to Code,Add:C839,C840
PAGE_26:(1)Del TV Card power original protect part in MINI PCI card :L58,L59,L60,L61
(2)Add IDSEL_TV:R522
PAGE_28:Add TV TUNNER page from AF1 schematic
PAGE_29:Del FDD interface Del:CON24,C728,C732,C731,C734,RP12,R437,R363,R403,R389,R351
PAGE_31:(1)Modify U/B CON:CON29,Del:R503,Add Parts:R531,R532,Add: -TVON,-ODDON GPIO Function,Del:-INTERNET,-E-MAIL GPIO Function
(2)Add: LKBEN GPIO Function
(3)Add: Nomount location L65
PAGE_32:(1)Add wake up function in location:Q45(-TVON),Q46(-ODDON),Del Non-mount location:Q34,Q38(-E-MAIL,-INTERNET)
(2)Add screw holder:H26,H27
PAGE_33:Add U40,L64,PD22,C842,C841,R603,R604 for Luminous K/B power drive schematic
PAGE_35:Add PR132,PC126 for RC delay circuit on VCC3 and VCC2.5 power
PAGE_38:Modify PWR value:PR127,PQ10,PQ18,PQ19
PAGE_39:Modify PWR value:PR88,PR99
PP stage
PAGE_03:Del parts:R566,C873
PAGE_04:Del Non-mount location:R593,R595 for CPU detect function
PAGE_09:Del PARTS:SW1,D56,R598 for CPU detect function
PAGE_15:Del PARTS:R601,R602,D58 for CPU detect function
PAGE_17:Add location:R606 for change CH+,CH- location pin
PAGE_33:Add LKB PWR Conn:CON30,R605
PAGE_31:(1)Del location:R533,R534 for change CH+,CH- location pin
(2)Add location:R607,R608 for -INTERNET,-E-MAIL function pull high

QUANTA COMPUTER

Title
HISTORY

Size	Document Number	Rev
A	NR2 Main Board	1A

Date: 星期一, 五月 24, 2004 Sheet 40 of 40