ATN: JULIA FM: JO/JNC. 19/JAN.01'

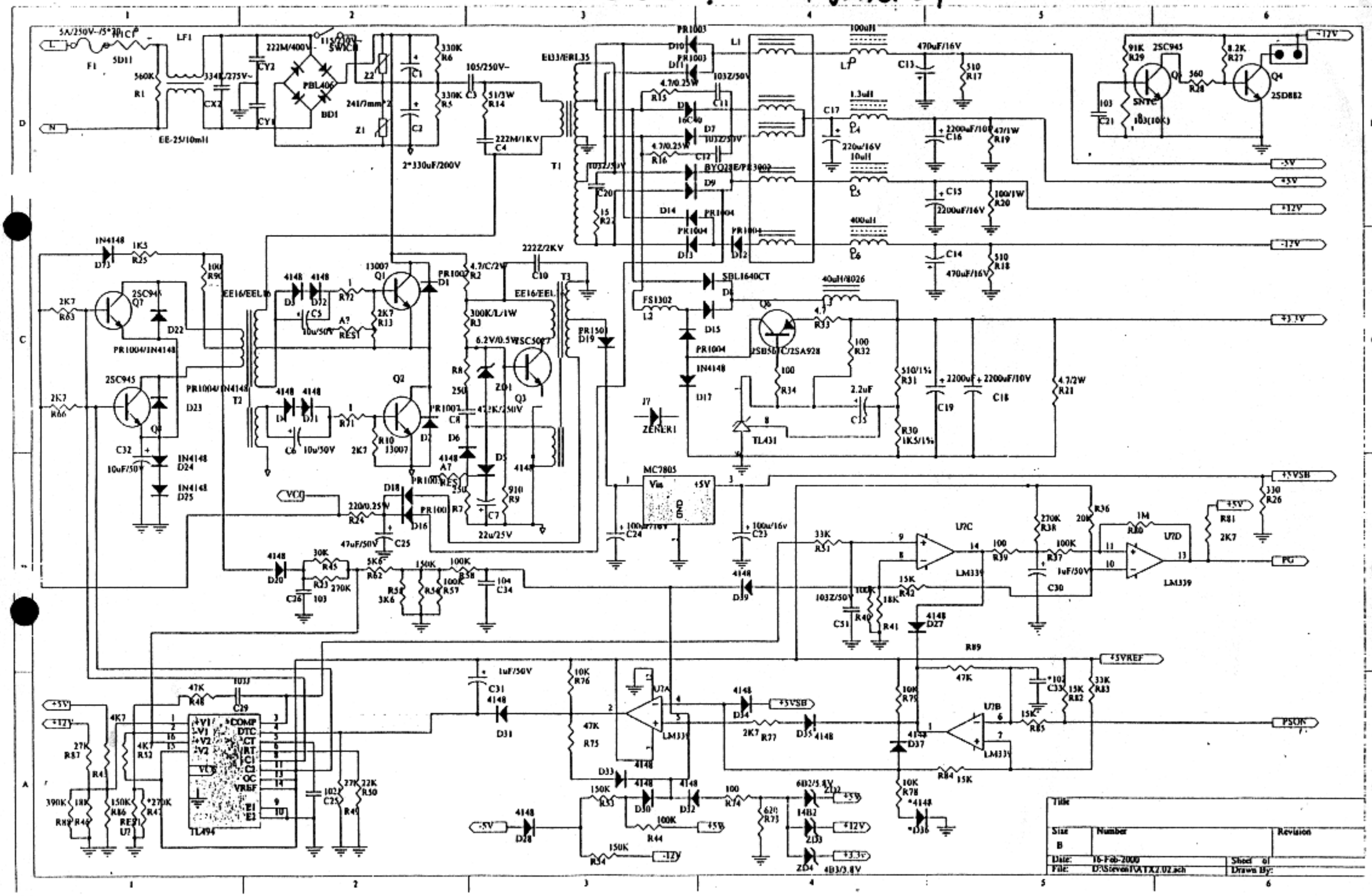

This message disappears after registration. http://www.contenta-images2pdf.com