LX6/7 (Liverpool) BLOCK DIAGRAM

01

PCB STACK UP

6L Dis.

LAYER 1 : TOP
LAYER 2 : SGND
LAYER 3 : IN1(High)
LAYER 4 : IN2(Low)
LAYER 5 : SVCC
LAYER 6 : BOT

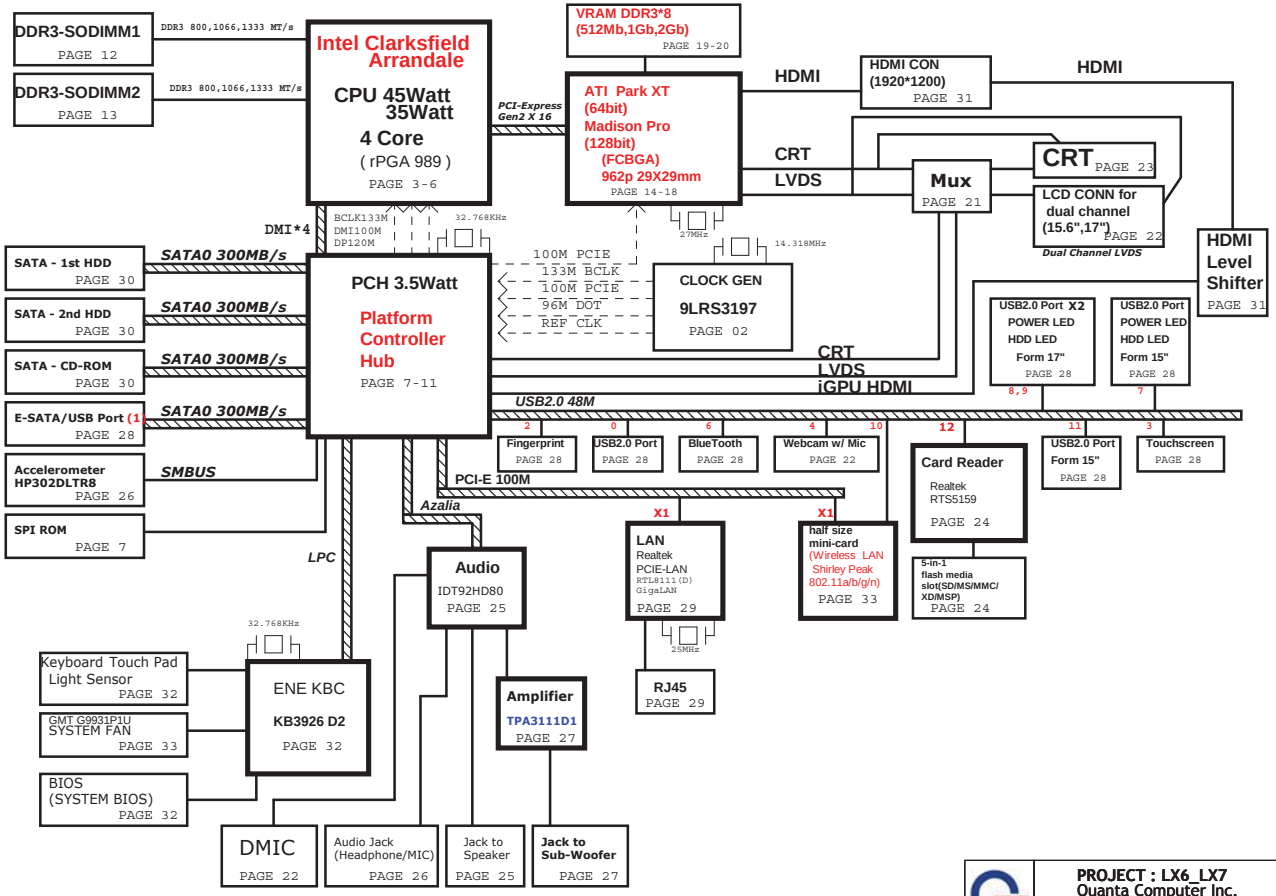

http://hobi-elektronika.net

NB5

PROJECT : LX6_LX7
Quanta Computer Inc.

Size	Document Number	Rev
Custom	BLOCK DIAGRAM	1A

Date: Tuesday, February 02, 2010 | Sheet 1 of 44

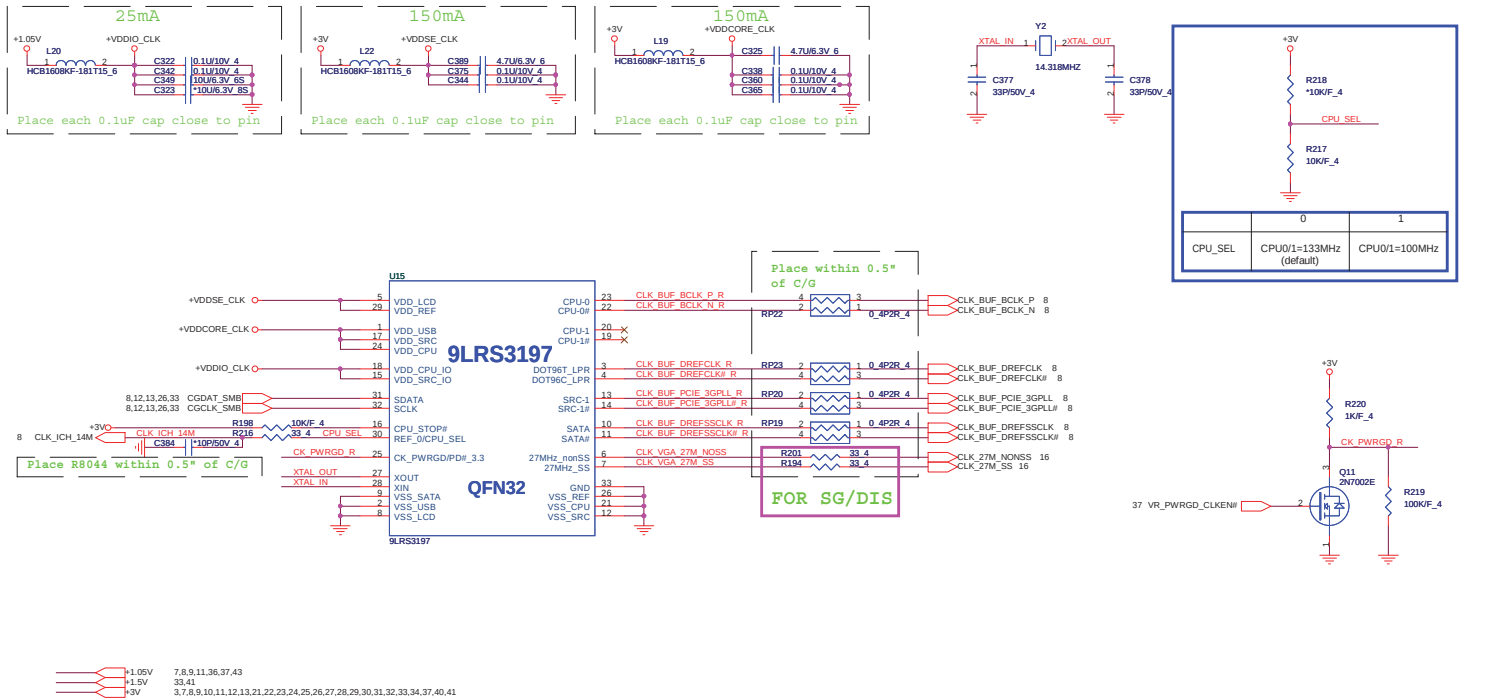

HOLE

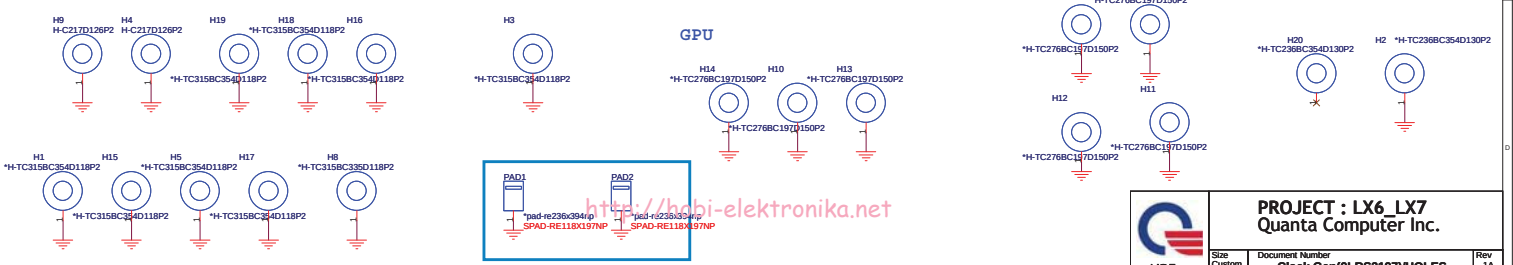

http://hobi-elektronika.net

NB5

PROJECT : LX6_LX7
Quanta Computer Inc.

Size	Document Number	Rev
Custom	Clock Gen(9LRS3197)/HOLES	1A

Date: Tuesday, February 02, 2010 | Sheet 2 of 44

	DIS	SG/UMA
Ra	NA	0 ohm
Rb	0 ohm	NA
Rc	0 ohm	NA

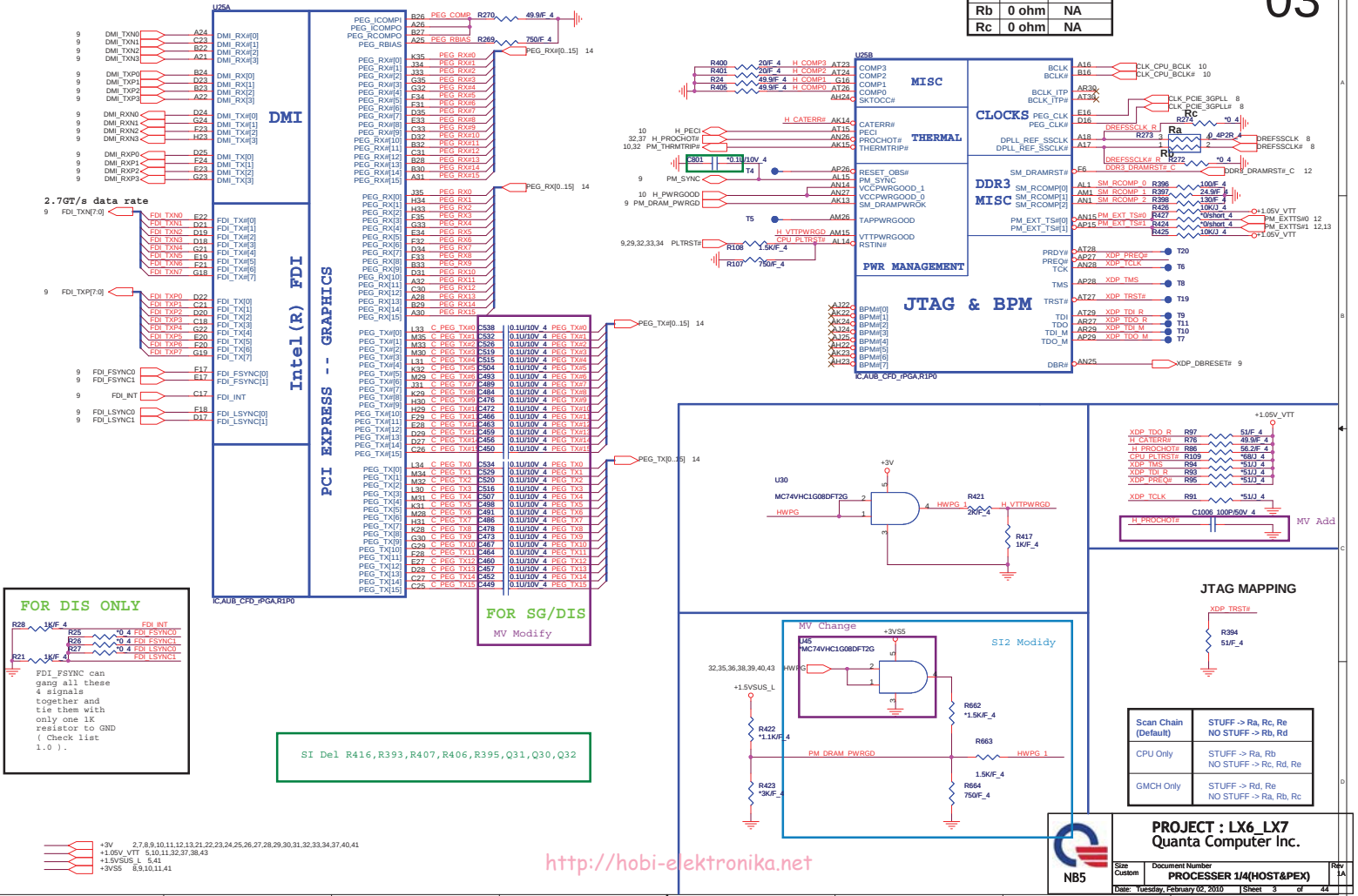

SI Del R416,R393,R407,R406,R395,Q31,Q30,Q32

Scan Chain (Default)	STUFF -> Ra, Rc, Re NO STUFF -> Rb, Rd
CPU Only	STUFF -> Ra, Rb NO STUFF -> Rc, Rd, Re
GMCH Only	STUFF -> Rd, Re NO STUFF -> Ra, Rb, Rc

http://hobi-elektronika.net

NB5

PROJECT : LX6_LX7
Quanta Computer Inc.

Size	Document Number	Rev
Custom	PROCESSER 1/4(HOST&PEX)	1A

Date: Tuesday, February 02, 2010 | Sheet 3 of 44

AUBURNDALE/CLARKSFIELD PROCESSOR (DDR3)

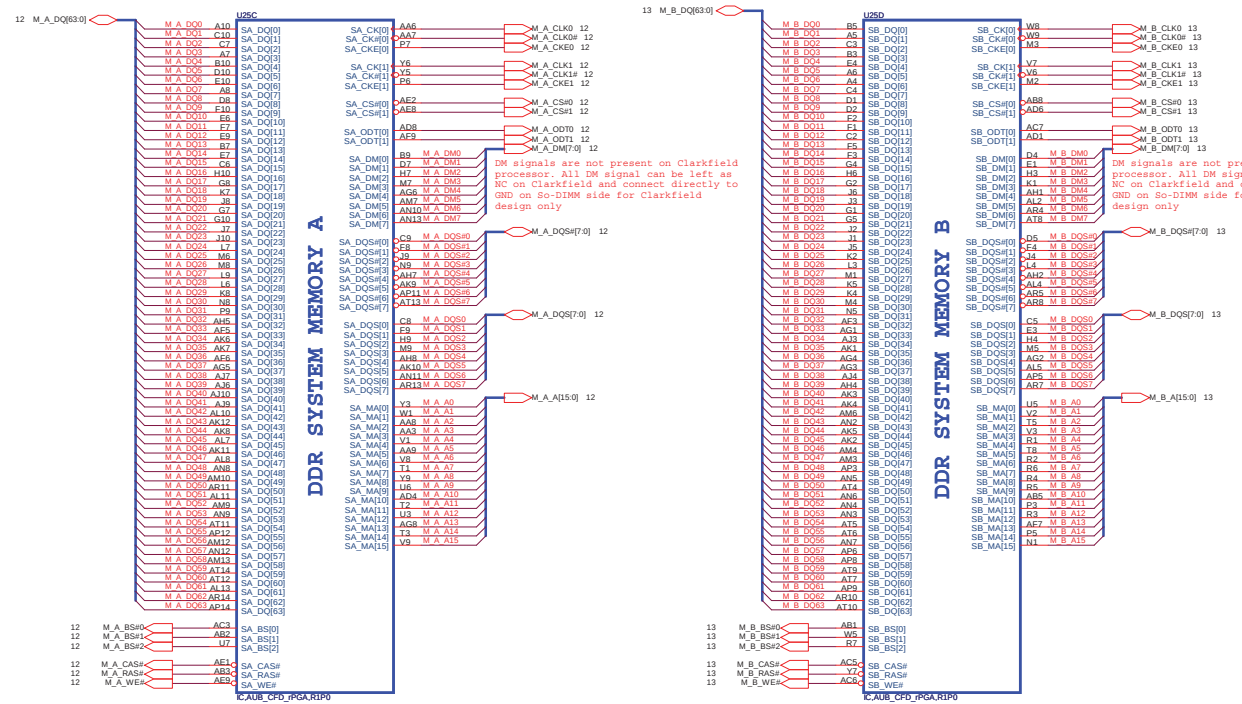

http://hobi-elektronika.net

NB5

PROJECT : LX6_LX7
Quanta Computer Inc.

Size	Document Number	Rev
Custom	PROCESSER 2/4(DDR)	1A

Date: Tuesday, February 02, 2010 | Sheet 4 of 44

	DIS	SG/UMA
Rc	NA	470
Rd	NA	0 ohm
Re	NA	0 ohm
Rf	NA	NA

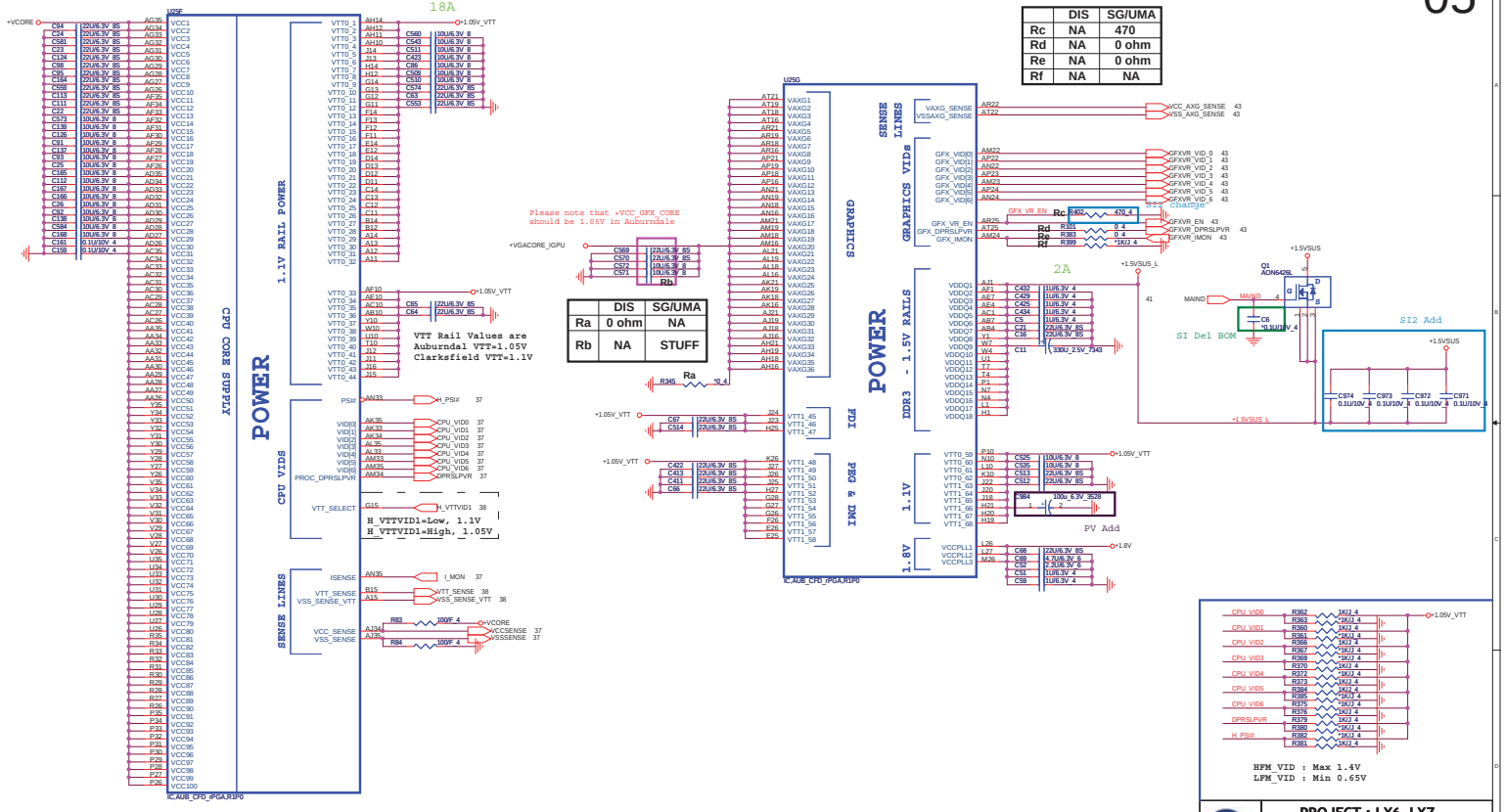

PROJECT : LX6_LX7
Quanta Computer Inc.

NB5

Size	Document Number	Rev
Custom	PROCESSER 3/4(POWER)	1A

Date: Tuesday, February 02, 2010 Sheet 5 of 44

AUBURNDALE/CLARKSFIELD PROCESSOR (GND)

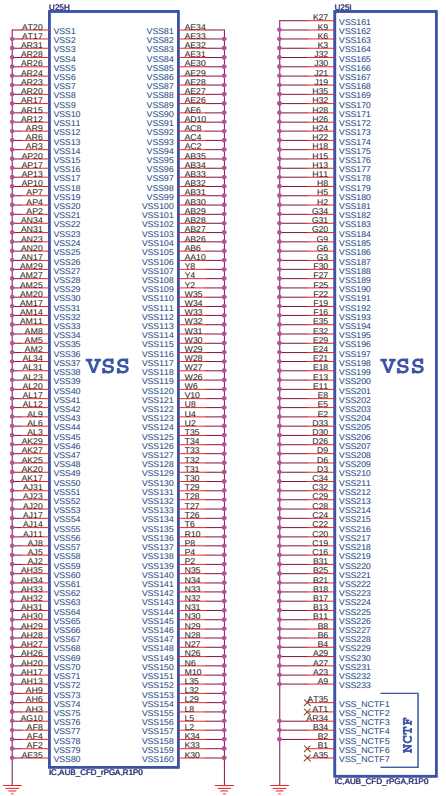

AUBURNDALE/CLARKSFIELD PROCESSOR(RESERVED, CFG)

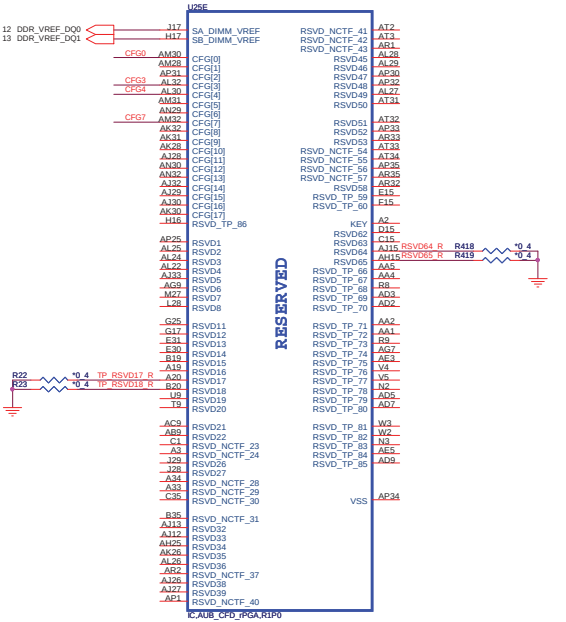

	UMA	SG/DIS
R90	NA	NA
R77	NA	3.01K
R79	NA	NA
R87	NA	NA

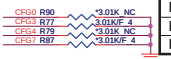

CFG[1:0] - PCI_Epress Configuration Select
* 11= 1 x 16 PEG
* 10= 2 x 8 PEG

	1	0
CFG4 (Display Port Presence)	Disabled; No Physical Display Port attached to Embedded Diplay Port	Enabled; An external Display port device is connected to the Embedded Display port
CFG0 (PCI-Epress Configuration Select)	Single PEG	Bifurcation enabled
CFG3 (PCI-Epress Static Lane Reversal)	No Lane Reversal	Lane Numbers Reversed 15 -> 0 , 14 -> 1

The Clarkfield processor's PCI Express interface may not meet PCI Express 2.0 jitter specifications. Intel recommends placing a 3.01K +/- 5% pull down resistor to VSS on CFG[7] pin for both rPGA and BGA components. This pull down resistor should be removed when this issue is fixed.

http://laptopbi-elektronik.net

NB5

PROJECT : LX6_LX7
Quanta Computer Inc.

Size	Document Number	Rev
Custom	PROCESSER 4/4 (GND)	1A

Date: Tuesday, February 02, 2010 Sheet 6 of 44

INTVRMEN - Integrated SUS 1.1V VRM Enable
High - Enable Internal VRs

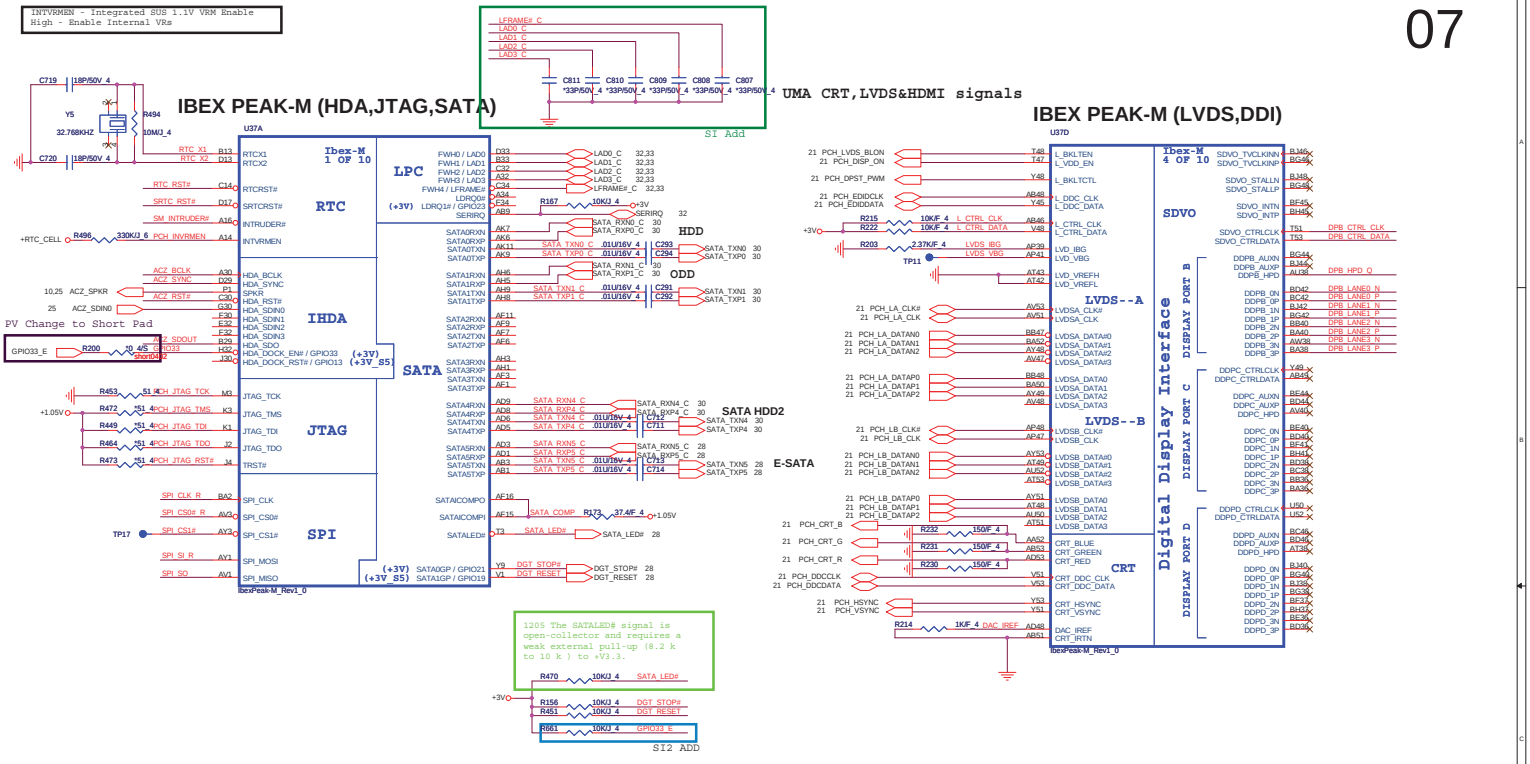

UMA HDMI signals

For AUDIO

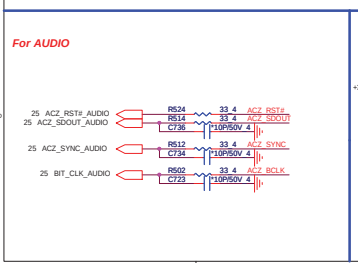

RTC

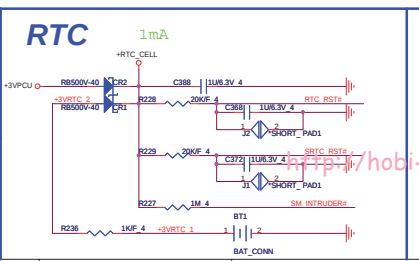

4M byte SPI ROM

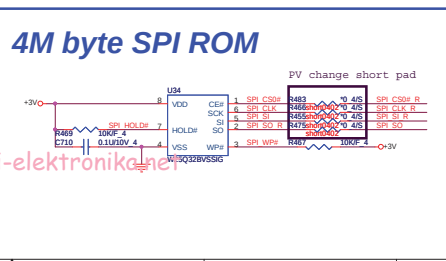

Socket: DG008000031
MXIC AKE39FP0Z00
WINBOND AKE391P0N00

http://hobi-elektronika.net

NB5	PROJECT : LX6_LX7 Quanta Computer Inc.		
Size Custom	Document Number PCH 1/5 (SATA,HDA,LPC)		Rev 1A
Date: Tuesday, February 02, 2010	Sheet 7 of 44		

IBEX PEAK-M (GND)

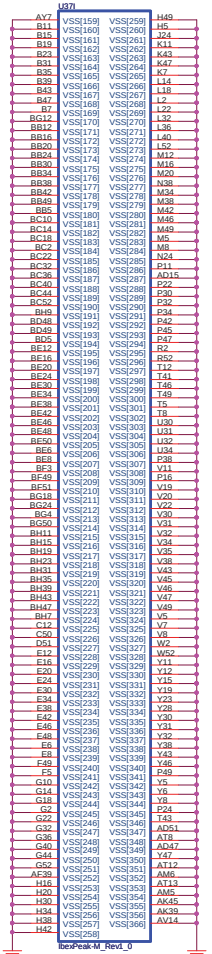

IBEX PEAK-M (PCI-E,SMBUS,CLK)

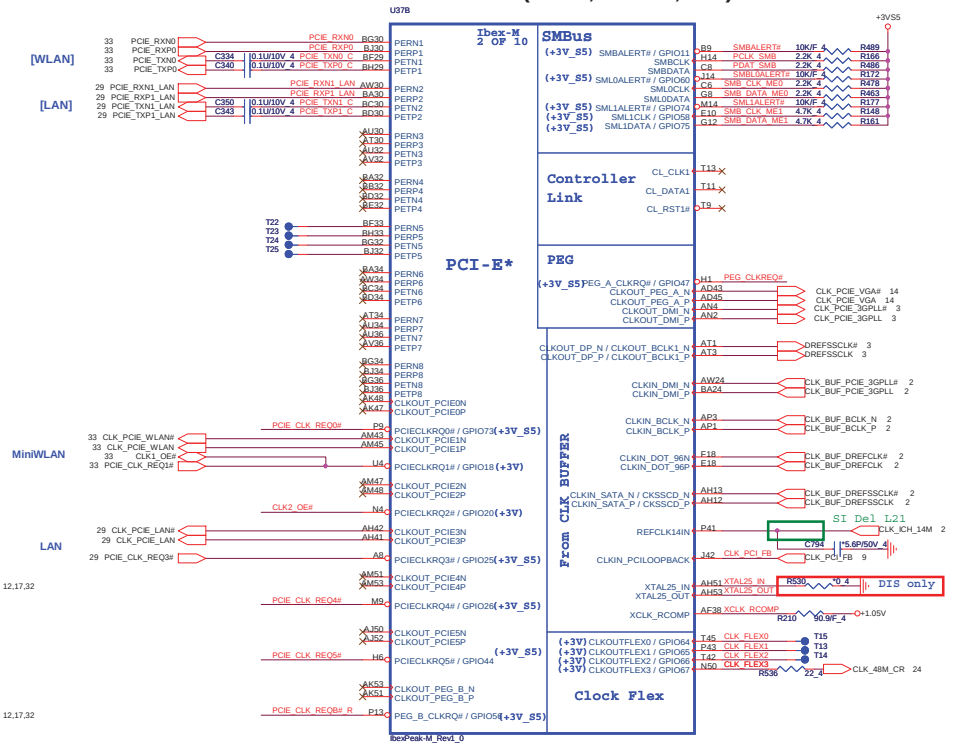

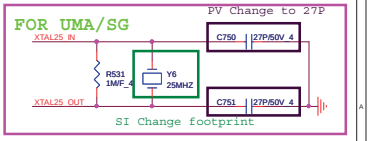

NB5

PROJECT : LX6_LX7
Quanta Computer Inc.

Size	Document Number	Rev
Custom	PCH 2/5 (PCIE, SMBUS, CK)	1A

Date: Tuesday, February 02, 2010 Sheet 8 of 44

http://hobi-elektronika.net

IBEX PEAK-M (PCI,USB,NVRAM)

IBEX PEAK-M (DMI,FDI,GPIO)

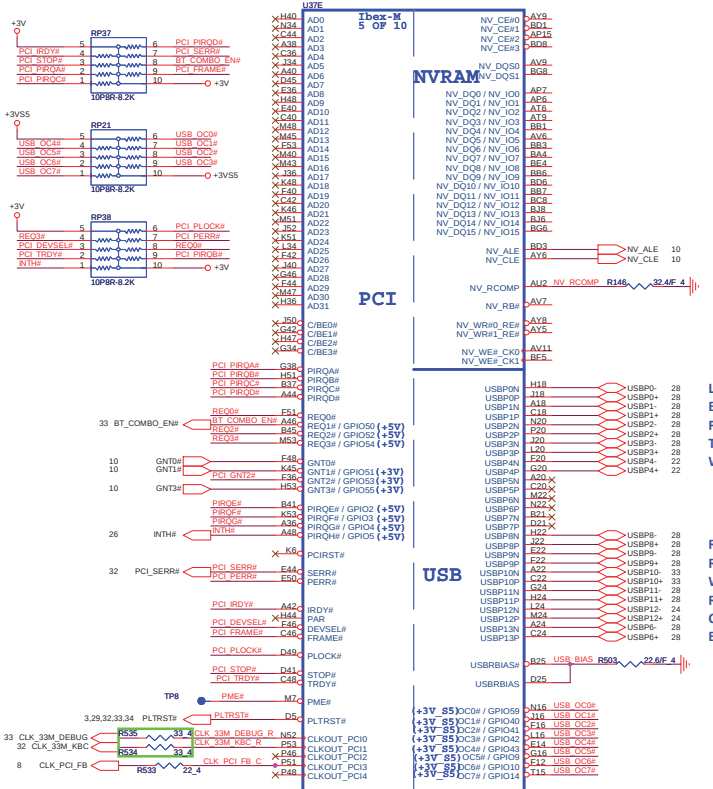

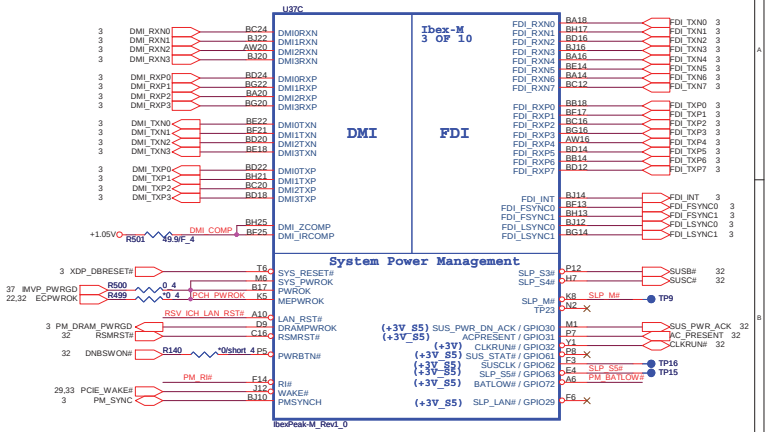

Left_USB
E-Sata
Fingerprint
Touchscreen
Webcam

Right_USB 17"/SATA LED
Right_USB 15"/SATA LED
WLAN
Right_USB 15"
Card Reaer
Blue tooth

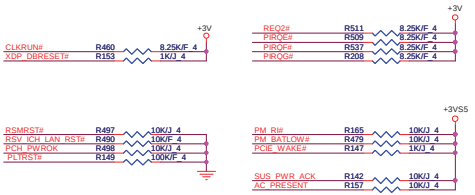

FOR SG ONLY

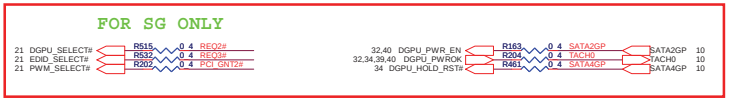

http://hobi-elektronika.net

NB5	PROJECT : LX6_LX7 Quanta Computer Inc.	
Size Custom	Document Number PCH 3/5 (PCI,ONFI,USB,DMI)	Rev 1A
Date: Tuesday, February 02, 2010	Sheet 9 of 44	

IBEX PEAK-M (GPIO,VSS_NCTF,RSVD)

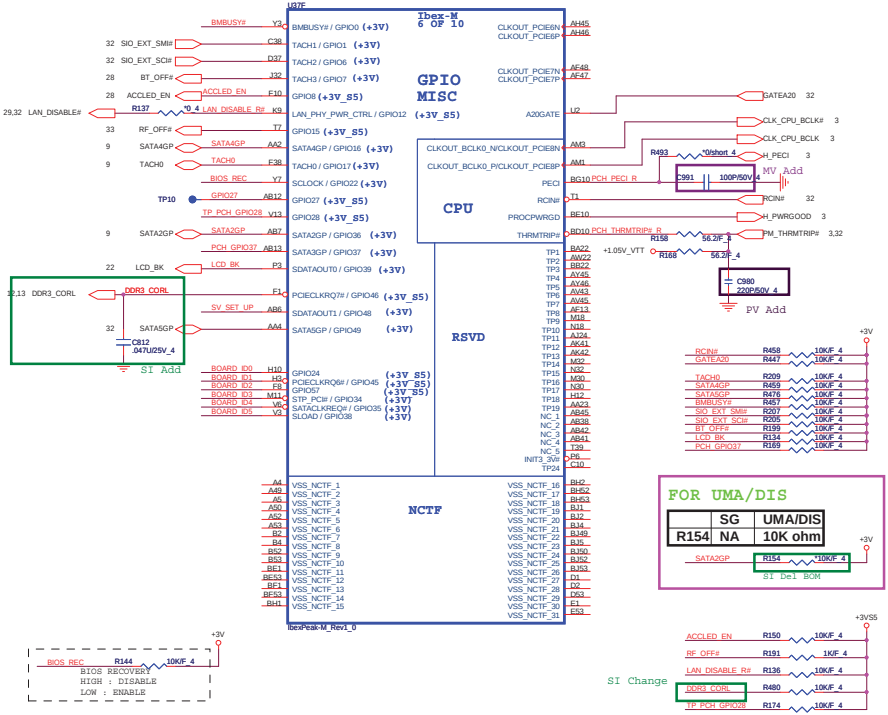

IBEX PEAK-M (GND)

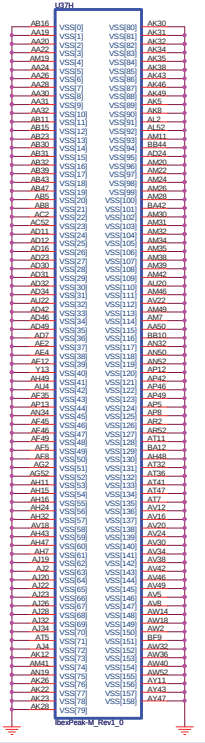

Pin	Net
RCIN#	R458 10K/F 4
GATEA20	R447 10K/F 4
TACH0	R209 10K/F 4
SATA4GP	R459 10K/F 4
SATA5GP	R476 10K/F 4
BMBUSY#	R457 10K/F 4
SIO_EXT_SMI#	R207 10K/F 4
SIO_EXT_SCI#	R205 10K/F 4
BT_OFF#	R199 10K/F 4
LCD_BK	R134 10K/F 4
PCH_GPIO37	R169 10K/F 4

FOR UMA/DIS

	SG	UMA/DIS
R154	NA	10K ohm

SATA2GP R154 *10K/F 4 (+3V)

SI Del BOM

Pin	Net
ACCLED_EN	R150 10K/F 4
RF_OFF#	R191 1K/F 4
LAN_DISABLE R#	R136 10K/F 4
DDR3_CORL	R480 10K/F 4
TP_PCH_GPIO28	R174 10K/F 4

SI Change

BIOS_REC R144 10K/F_4 (+3V)

BIOS RECOVERY
HIGH : DISABLE
LOW : ENABLE

9 GNT3# R539 *10K/F 4

A16 swap override Strap/Top-Block Swap Override jumper	
GNT3#	Low = A16 swap override/Top-Block Swap Override enabled High = Default

SV_SET_UP R155 10K/F 4 (+3V)

SV_SET_UP	1-X High = Strong (Default)

9 GNT0# R213 *1K/F 4
9 GNT1# R538 *1K/F 4

Boot BIOS Strap		
PCI_GNT0#	GNT#1	Boot BIOS Location
0	0	LPC
0	1	Reserved (NAND)
1	0	PCI
1	1	SPI

9 NV_ALE R488 *1K/F 4 (+1.8V)
9 NV_CLE R491 *1K/F 4

Danbury Technology Enabled	
NV_ALE	High = Enable Low = Disable

DMI Termination Voltage	
NV_CLE	Set to Vcc when LOW Set to Vcc/2 when HIGH

No Reboot Strap

7,25 ACZ_SPKR R135 *1K/F 4 (+3V)

BOARD ID SETTING

Board ID	ID5	ID4	ID3	ID2	ID1	ID0
TBD	RD5 (0)	RD4 (0)	RD3 (0)	RD2 (0)	RD1 (0)	RU0 (1)
TBD	RD5 (0)	RD4 (0)	RD3 (0)	RD2 (0)	RU1 (1)	RD0 (0)
TBD	RD5 (0)	RD4 (0)	RD3 (0)	RD2 (0)	RU1 (1)	RU0 (1)
TBD	RD5 (0)	RD4 (0)	RD3 (0)	RU2 (1)	RD1 (0)	RD0 (0)
TBD	RD5 (0)	RD4 (0)	RD3 (0)	RU2 (1)	RD1 (0)	RU0 (1)
TBD	RD5 (0)	RD4 (0)	RD3 (0)	RU2 (1)	RU1 (1)	RD0 (0)
TBD	RD5 (0)	RD4 (0)	RD3 (0)	RU2 (1)	RU1 (1)	RU0 (1)

Board ID	ID0	ID1	ID2	ID3	ID4	ID5
LX6	0	1				
LX7	1	0				
Discrete			0	0		
UMA			0	1		
SG			1	0		
LX7_No Subwoofer			1	1		

MV Add option

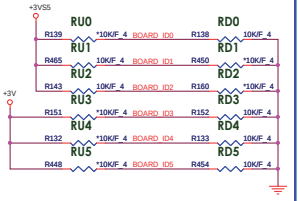

+3V 2,3,7,8,9,11,12,13,21,22,23,24,25,26,27,28,29,30,31,32,33,34,37,40,41
+1.8V 5,11,21,36,41
+3VS5 3,8,9,11,41
+1.05V_VTT 3,5,11,32,37,38,43

NB5

PROJECT : LX6_LX7
Quanta Computer Inc.

Size	Document Number	Rev
Custom	PCH 4/5 (GPIO & Strap)	1A

Date: Tuesday, February 02, 2010 Sheet 10 of 44

http://hobi-elektronika.net

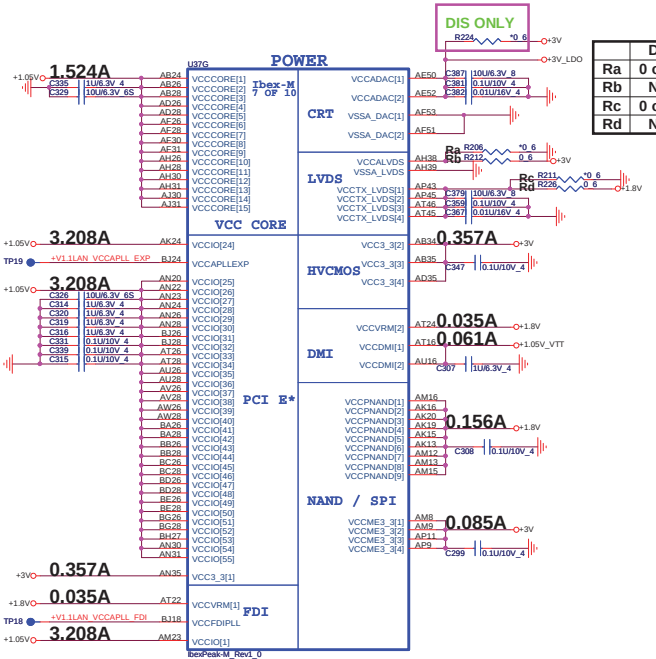

	DIS	SG/UMA
Ra	0 ohm	NA
Rb	NA	0 ohm
Rc	0 ohm	NA
Rd	NA	0 ohm

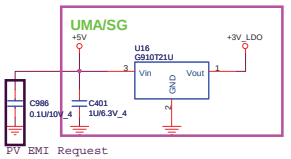

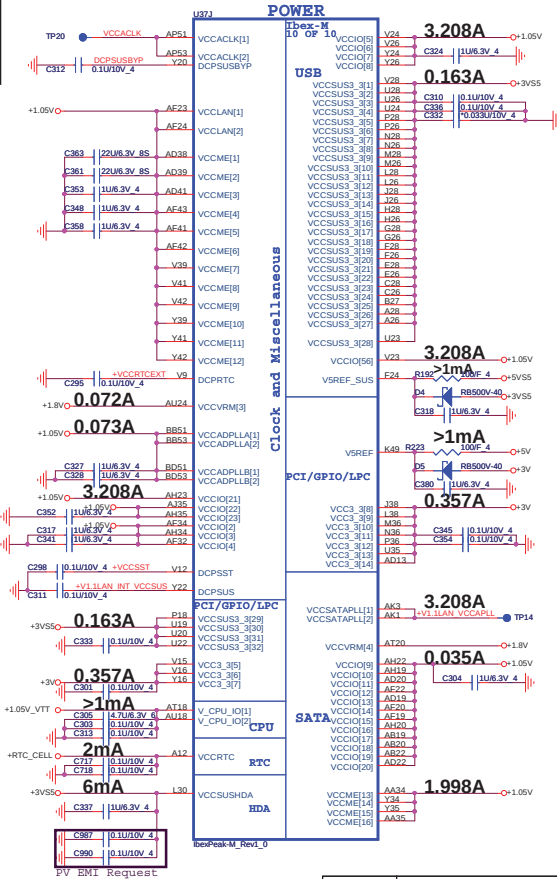

http://hobi-elektronika.net

NB5

PROJECT : LX6_LX7
Quanta Computer Inc.

Size	Document Number	Rev
Custom	PCH 5/5 (POWER)	1A

Date: Tuesday, February 02, 2010 Sheet 11 of 44

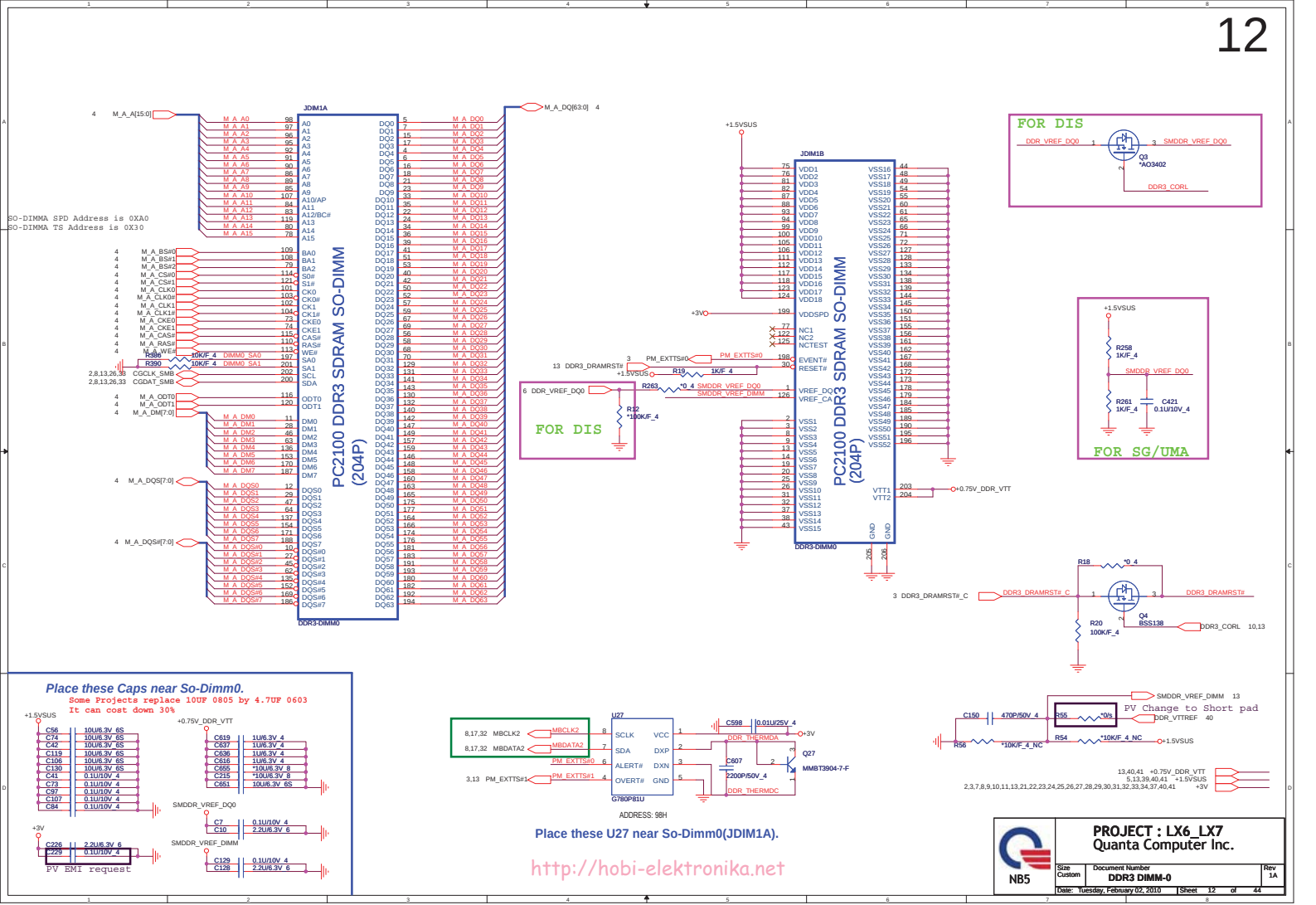

http://hobi-elektronika.net

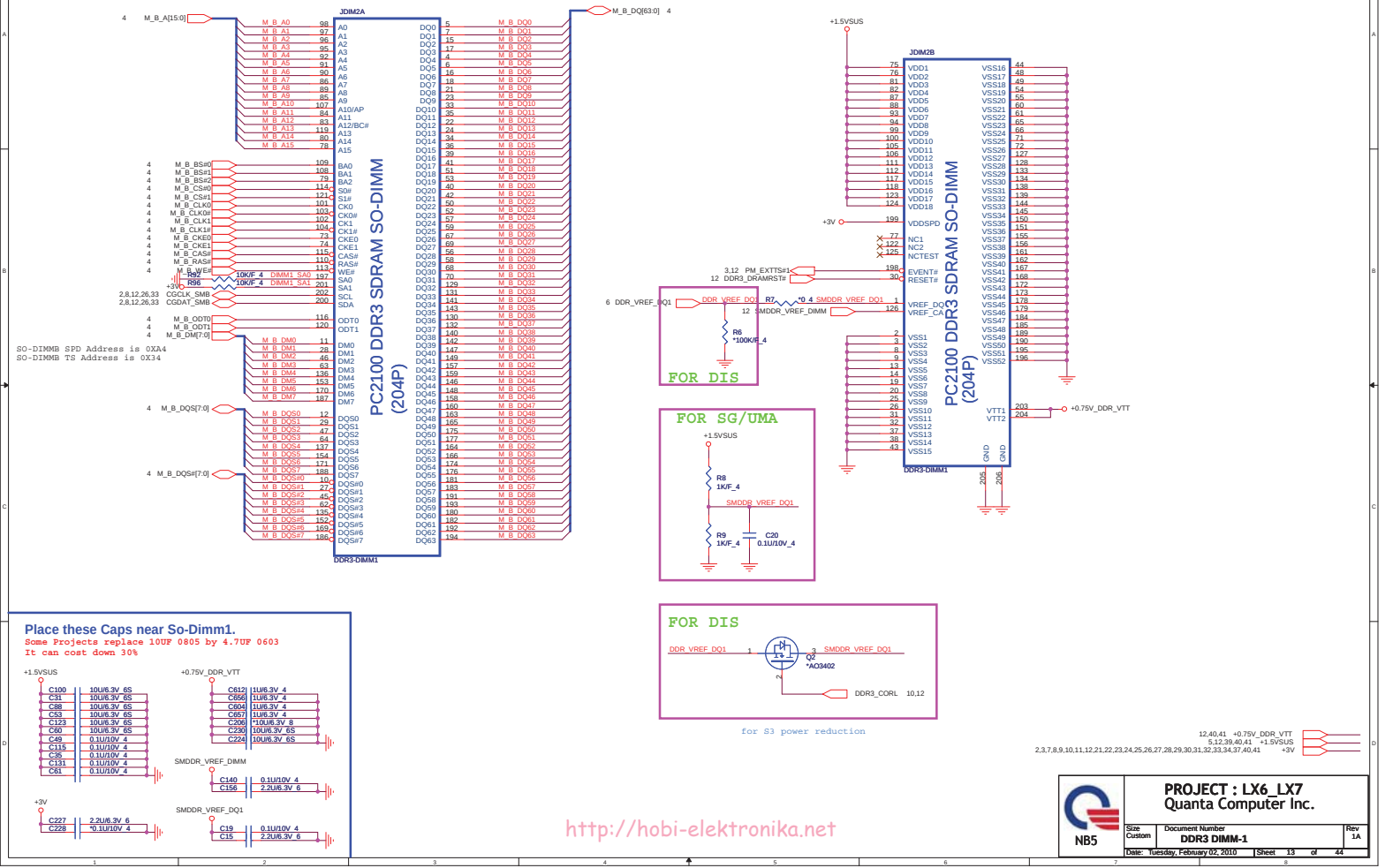

http://hobi-elektronika.net

NB5

PROJECT : LX6_LX7
Quanta Computer Inc.

Size	Document Number	Rev
Custom	DDR3 DIMM-1	1A

Date: Tuesday, February 02, 2010 | Sheet 13 of 44

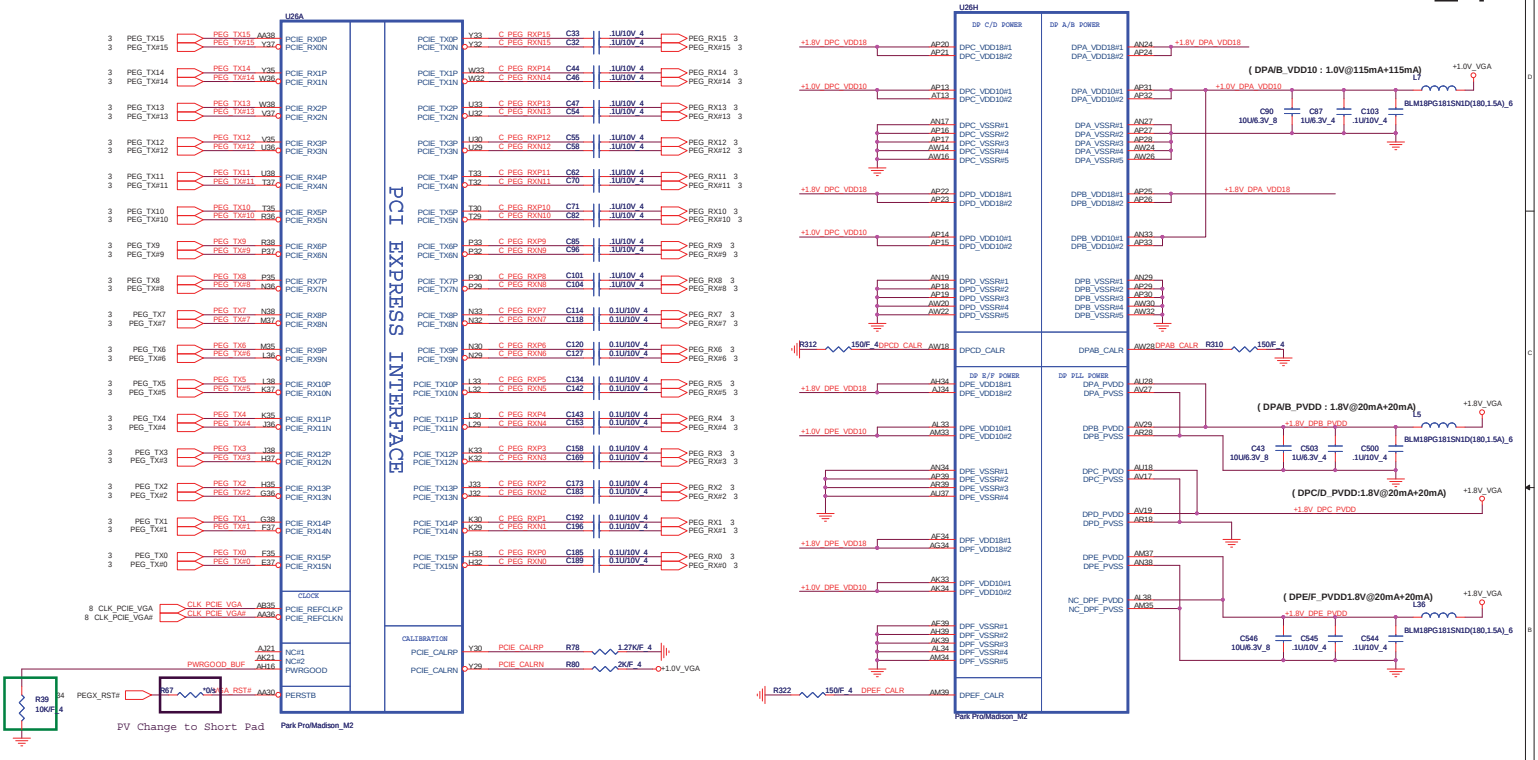

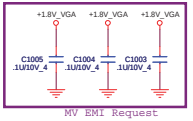

MV EMI Request

SI Del R43,R38,C57

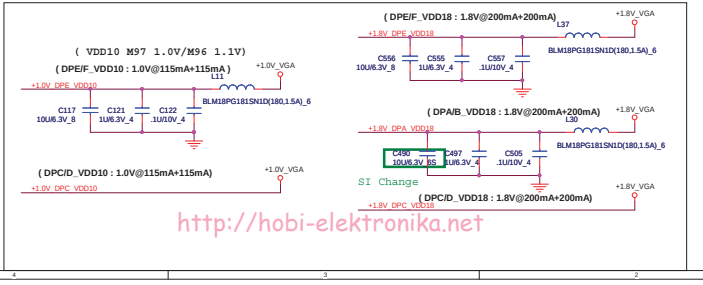

http://hobi-elektronika.net

NB5	PROJECT : LX6_LX7 Quanta Computer Inc.		
	Size Custom	Document Number ATI M97-M2 (PCIE I/F) 1/5	Rev 1A
	Date: Tuesday, February 02, 2010	Sheet 14 of 44	

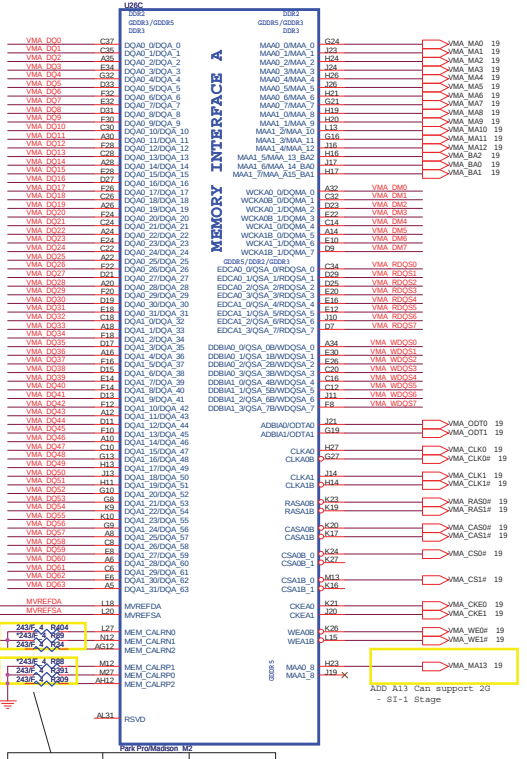

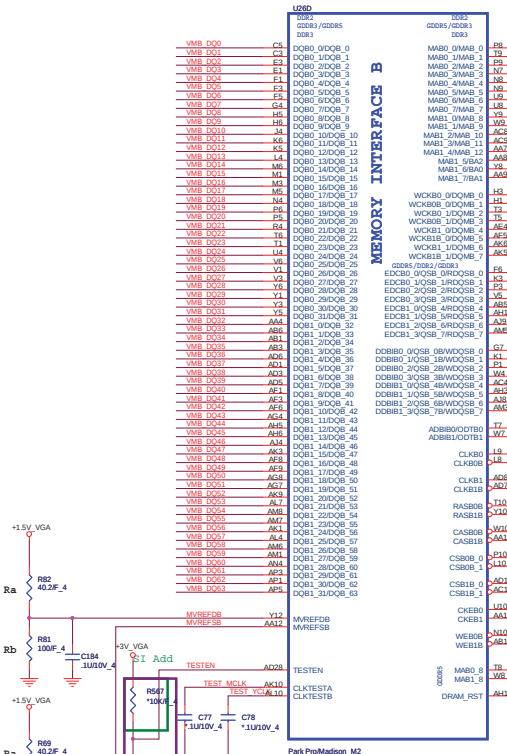

	For PARK	For Madison
MEM_CALRNP0		stuff
MEM_CALRNP1	stuff	
MEM_CALRNP2		stuff

DDR3/GDDR3 Memory Stuff Option

	GDDR5	GDDR3	DDR3
+1.5V_VGA	1.5V	1.8V/1.5V	1.5V
Ra	40.2R	40.2R	40.2R
Rb	100R	100R	100R

http://hobi-elektronika.net

Designator		For Mannhatton
Ra		10K
Rb		51R
Rc		DNI
Ca		68pF

NB5

PROJECT : LX6_LX7
Quanta Computer Inc.

Size	Document Number	Rev
Custom	ATI M97-M2 (MEM I/F) 2/5	1A

Date: Tuesday, February 02, 2010 Sheet 15 of 44

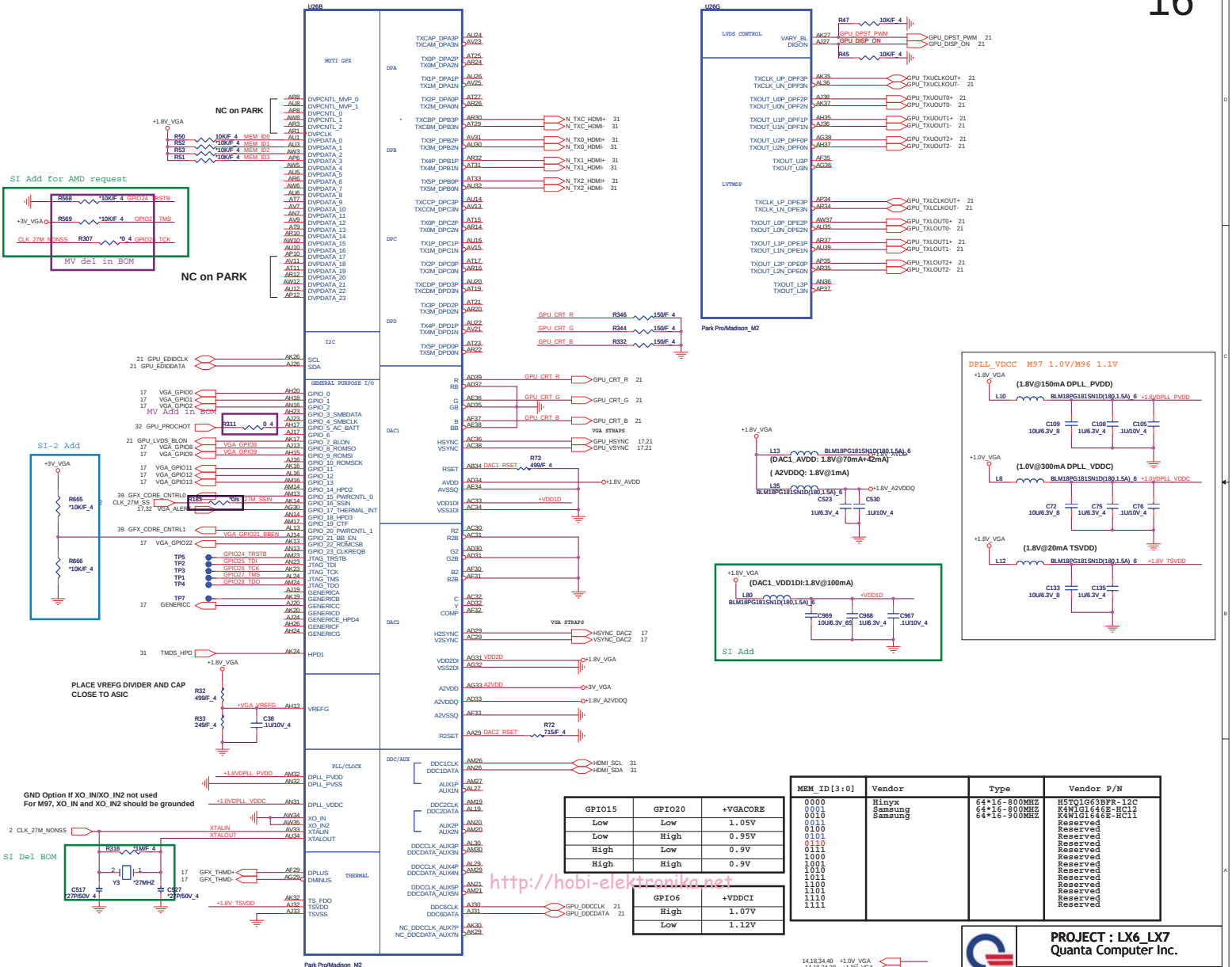

GPIO15	GPIO20	+VGACORE
Low	Low	1.05V
Low	High	0.95V
High	Low	0.9V
High	High	0.9V

GPIO6	+VDDCI
High	1.07V
Low	1.12V

MEM_ID[3:0]	Vendor	Type	Vendor P/N
0000	Hinyx	64*16-800MHZ	H5TQ1G63BFR-12C
0001	Samsung	64*16-800MHZ	K4W1G1646E-HC12
0010	Samsung	64*16-900MHZ	K4W1G1646E-HC11
0011			Reserved
0100			Reserved
0101			Reserved
0110			Reserved
0111			Reserved
1000			Reserved
1001			Reserved
1010			Reserved
1011			Reserved
1100			Reserved
1101			Reserved
1110			Reserved
1111			Reserved

14,18,34,40 +1.0V_VGA
14,18,34,39 +1.8V_VGA
15,17,18,31,34,39 +3V_VGA

NB5

PROJECT : LX6_LX7
Quanta Computer Inc.

Size	Document Number	Rev
Custom	ATI M97-M2 (DISPLAY) 3/5	1A

Date: Tuesday, February 02, 2010 | Sheet 16 of 44

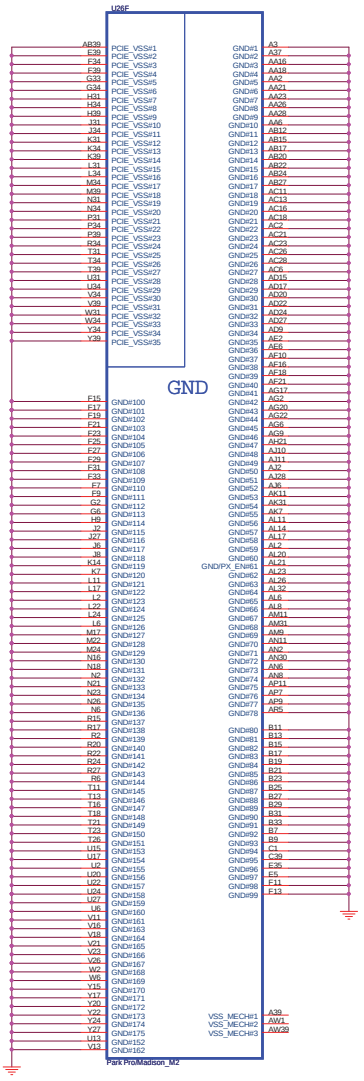

STRAPS

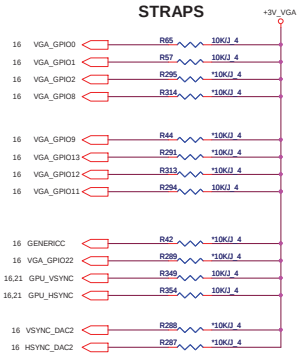

Memory Aperture size fix 256M

GPIO9 BIOSROM		GPIO13 ROMIDCFG2	GPIO12 ROMIDCFG1	GPIO11 ROMIDCFG0
0	128M	0	0	0
0	256M	0	0	1
0	64M	0	1	0
0	32M	0	1	1
0	512M	1	0	0
0	1G	1	0	1
0	2G	1	1	0
0	4G	1	1	1

It is a shared pin strap with CONFIG[2:0] if BIOS_ROM_EN is set to 0.

CONFIGURATION STRAPS

ALLOW FOR PULLUP PADS FOR THESE STRAPS AND IF THESE GPIOS ARE USED, THEY MUST NOT CONFLICT DURING RESET

RECOMMENDED SETTINGS
0= DO NOT INSTALL RESISTOR
1 = INSTALL 10K RESISTOR
X = DESIGN DEPENDANT
NA = NOT APPLICABLE

STRAPS	PIN	DESCRIPTION OF DEFAULT SETTINGS	
TX_PWRS_ENB	GPIO0	**Transmitter Power Savings Enable** 0: 50% Tx output swing for mobile mode 1: full Tx output swing (Default setting for Desktop)	1
TX_DEEMPH_EN	GPIO1	**PCI Express Transmitter De-emphasis Enable** 0: Tx de-emphasis disabled for mobile mode 1: Tx de-emphasis enabled (Default setting for Desktop)	1
BIF_GEN2_EN_A	GPIO2	0 = Advertises the PCI-E device as 2.5 GT/s capable at power-on. 1 = Advertises the PCI-E device as 5.0 GT/s capable at power-on. 5.0 GT/s capability will be controlled by software.	0
RSVD BIF_VGA_DIS RSVD	GPIO8 GPIO9 GPIO21	VGA ENABLED	0 0 0
BIOS_ROM_EN	GPIO_22_ROMCSB	ENABLE EXTERNAL BIOS ROM	0
ROMIDCFG(2:0)	GPIO[13:11]	SERIAL ROM TYPE OR MEMORY APERTURE SIZE SELECT	0 0 1
VIP_DEVICE_STRAP_ENA	V2SYNC	IGNORE VIP DEVICE STRAPS	0
RSVD AUD[1] AUD[0]	GENERICC HSYNC VSYNC	AUD[1] AUD[0] 0 0 No audio function 0 1 Audio for DisplayPort and HDMI if dongle is detected 1 0 Audio for DisplayPort only 1 1 Audio for both DisplayPort and HDMI	0 0 11

AMD RESERVED CONFIGURATION STRAPS

ALLOW FOR PULLUP PADS FOR THESE STRAPS AND IF THESE GPIOS ARE USED, THEY MUST NOT CONFLICT DURING RESET

H2SYNC	GENERICC

PULLUP PADS ARE NOT REQUIRED FOR THESE STRAPS BUT IF THESE GPIOS ARE USED, THEY MUST NOT CONFLICT DURING RESET

GPIO21_BB_EN

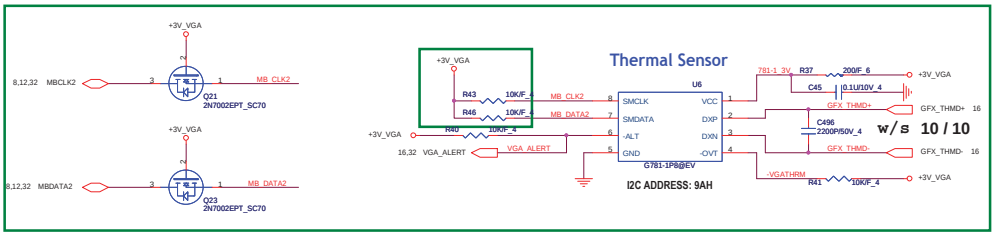

15,16,18,31,34,39 +3V_VGA

NB5	PROJECT : LX6_LX7 Quanta Computer Inc.	
Size Custom	Document Number ATI M97(GND&Str&Ther)4/5	Rev 1A
Date: Tuesday, February 02, 2010	Sheet 17 of 44	

http://hobi-elektronika.net

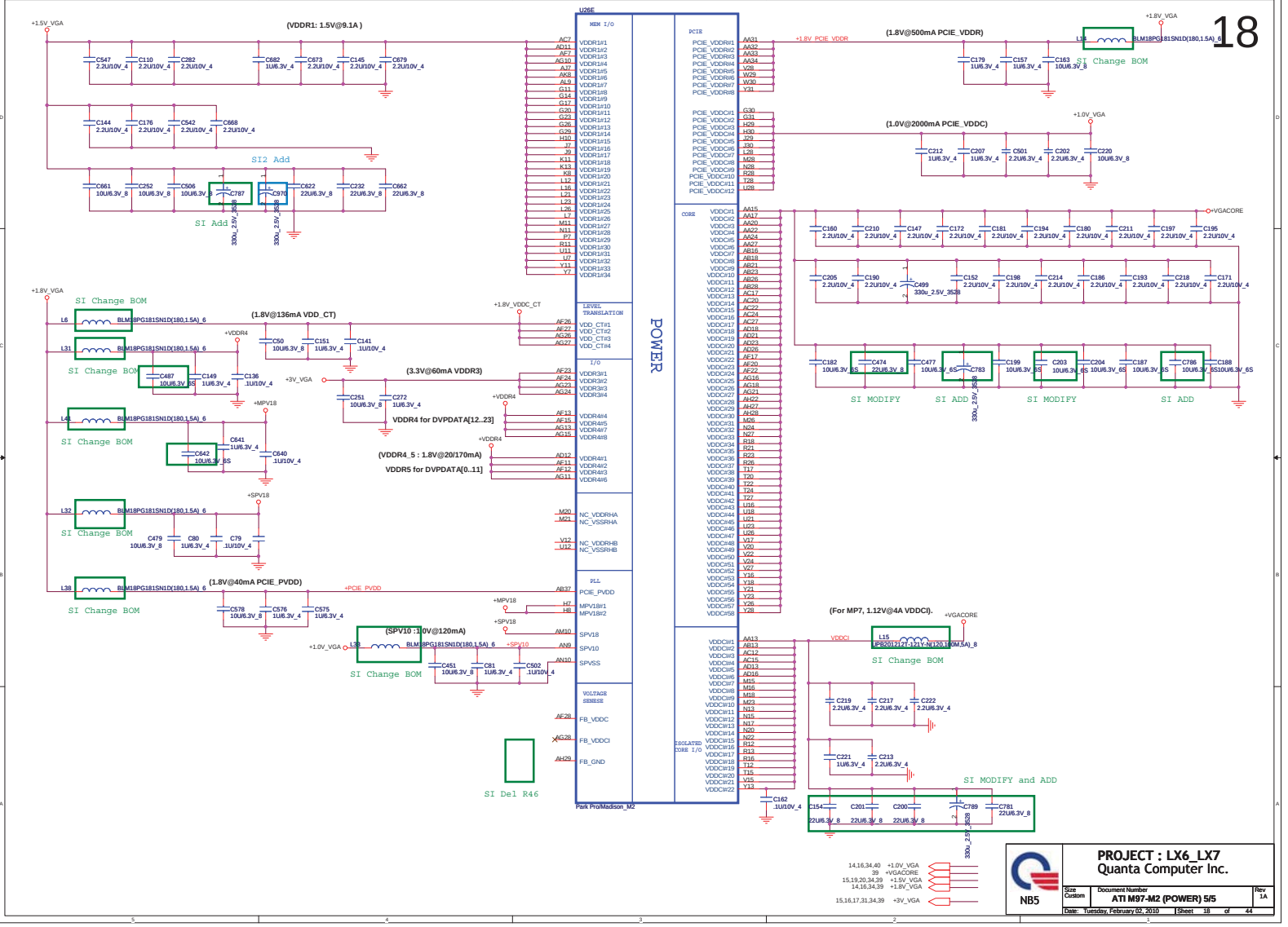

http://hobi-elektronika.net

CHANNEL A: 256MB/512MB DDR3

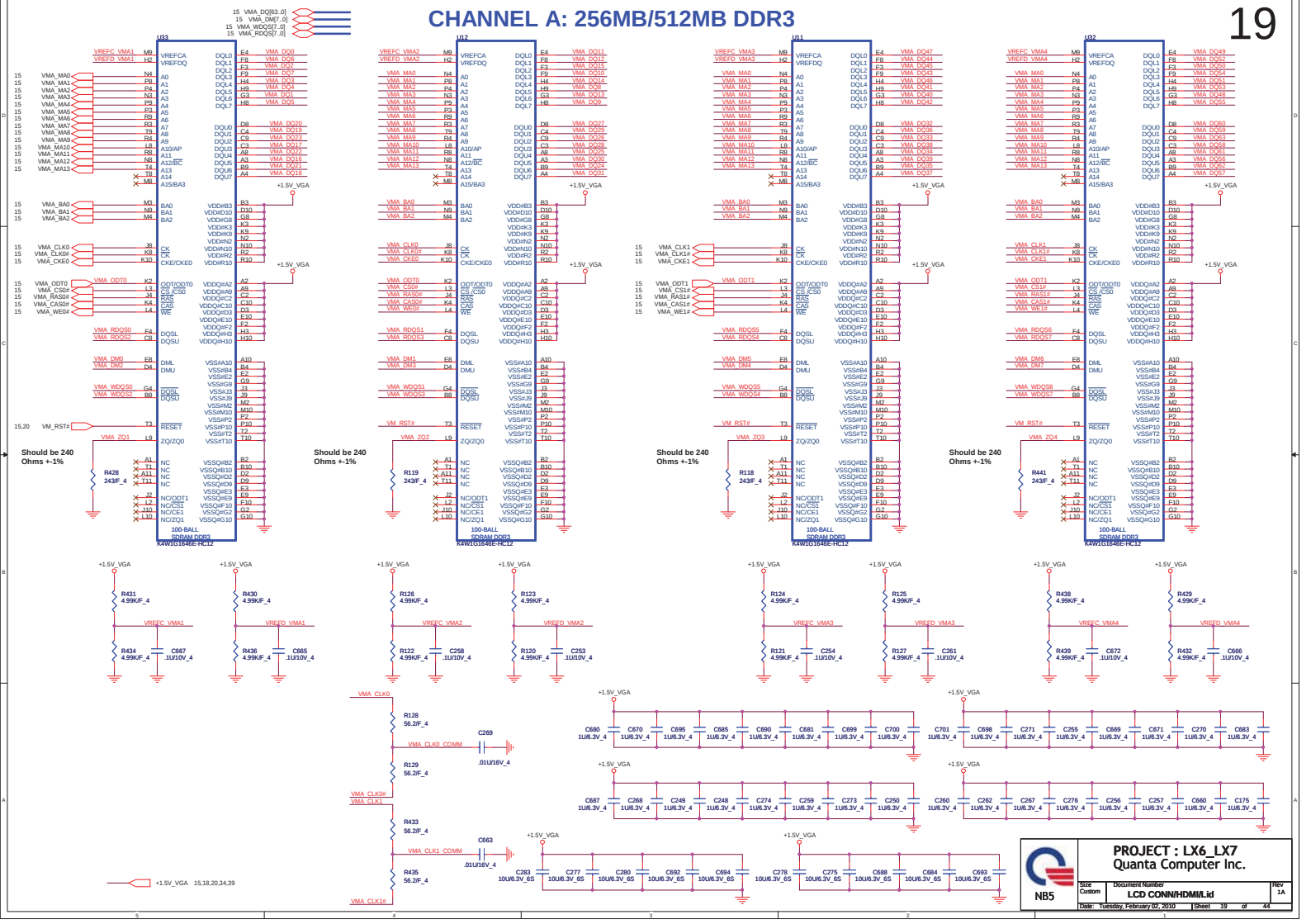

http://hobi-elektronika.net

CHANNEL B: 256MB/512MB DDR3

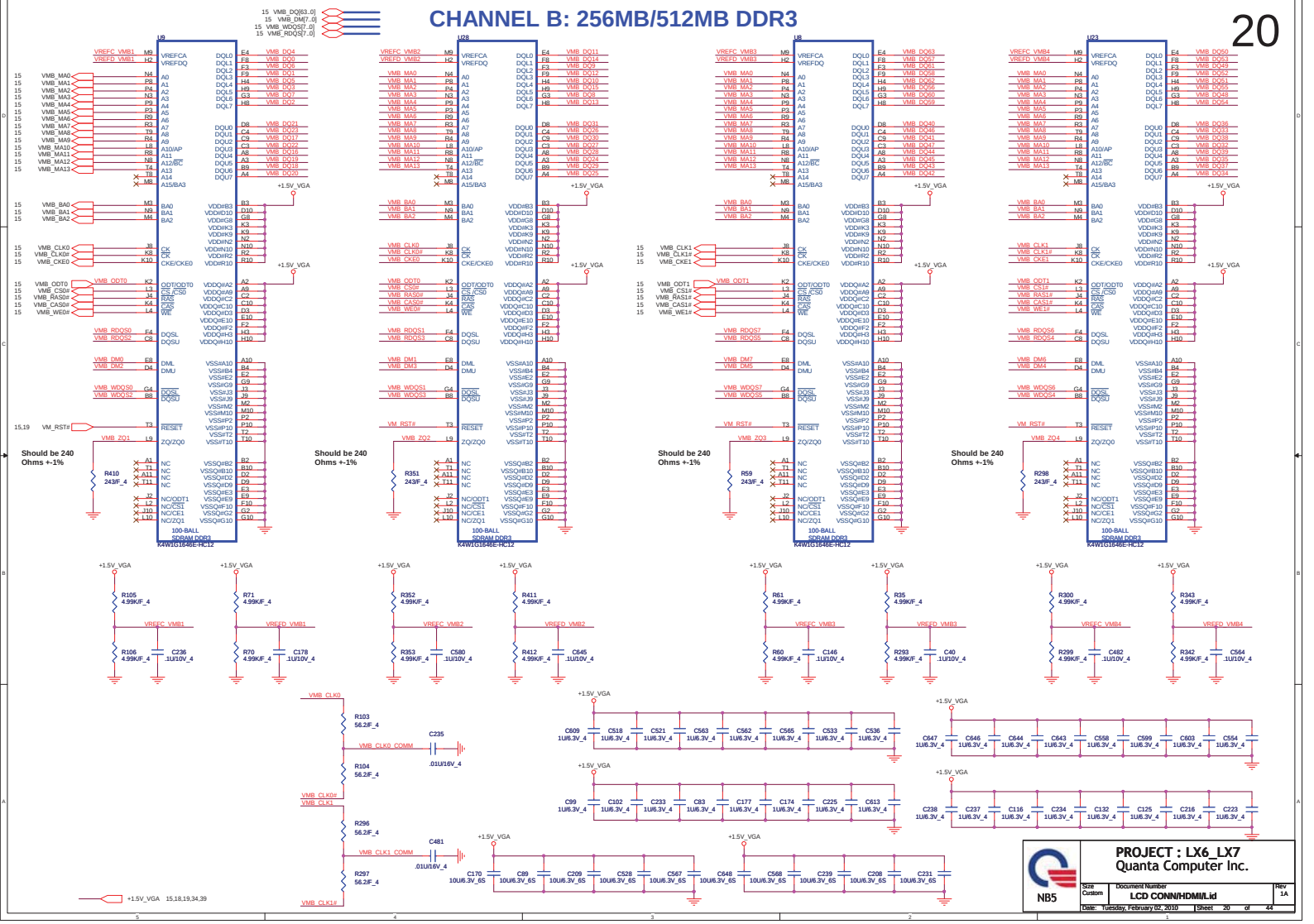

NB5	PROJECT : LX6_LX7 Quanta Computer Inc.	
Size: Custom	Document Number: LCD CONN/HDMI/Lid	Rev: 1A
Date: Tuesday, February 02, 2010	Sheet 20 of 44	

http://hobi-elektronika.net

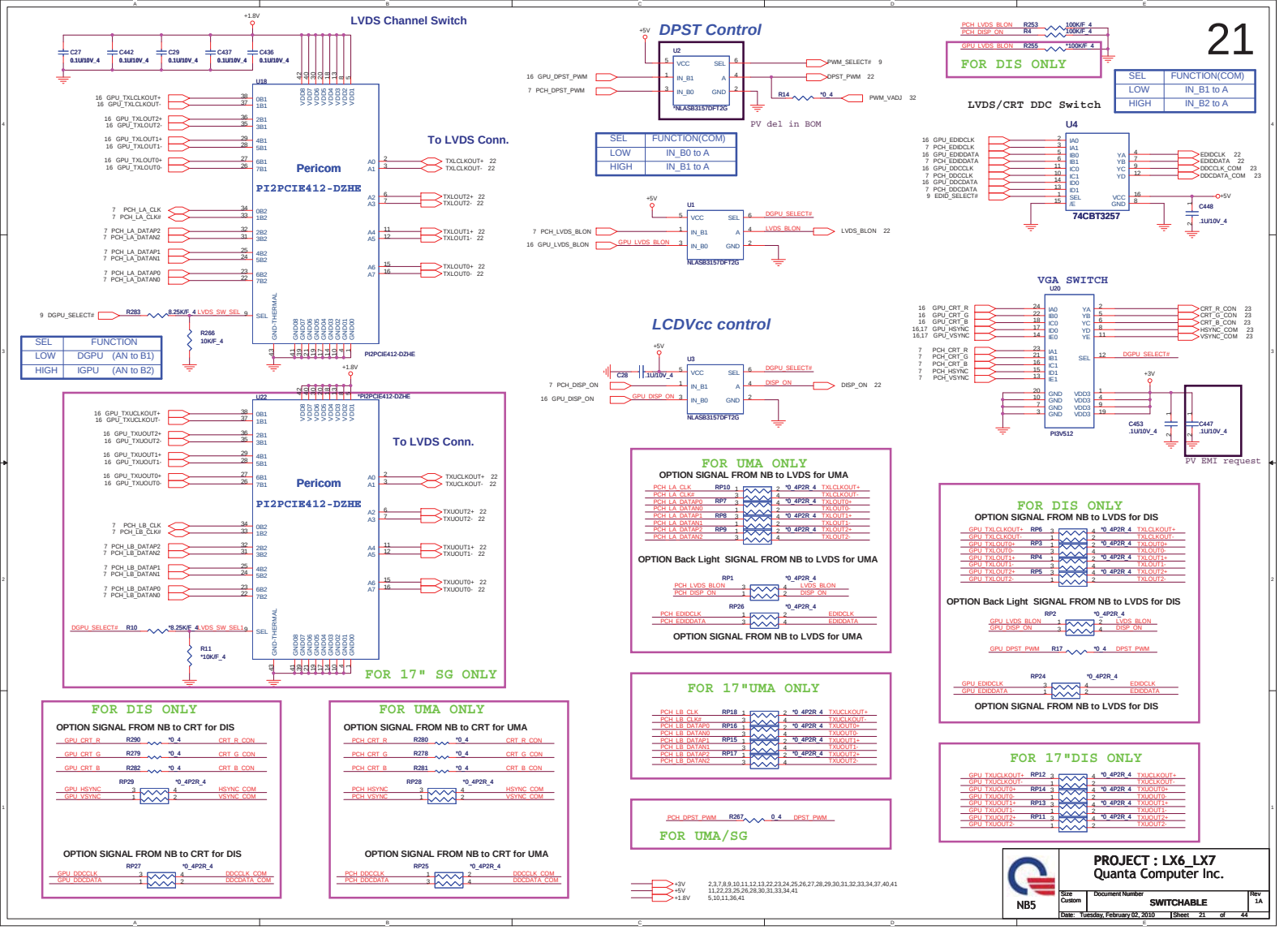

SEL	FUNCTION
LOW	DGPU (AN to B1)
HIGH	IGPU (AN to B2)

SEL	FUNCTION(COM)
LOW	IN_B0 to A
HIGH	IN_B1 to A

SEL	FUNCTION(COM)
LOW	IN_B1 to A
HIGH	IN_B2 to A

+3V 2,3,7,8,9,10,11,12,13,22,23,24,25,26,27,28,29,30,31,32,33,34,37,40,41
+5V 11,22,23,25,26,28,30,31,33,34,41
+1.8V 5,10,11,36,41

PROJECT : LX6_LX7
Quanta Computer Inc.

NB5

Size	Document Number	Rev
Custom	SWITCHABLE	1A

Date: Tuesday, February 02, 2010 Sheet 21 of 44

http://hobi-elektronika.net

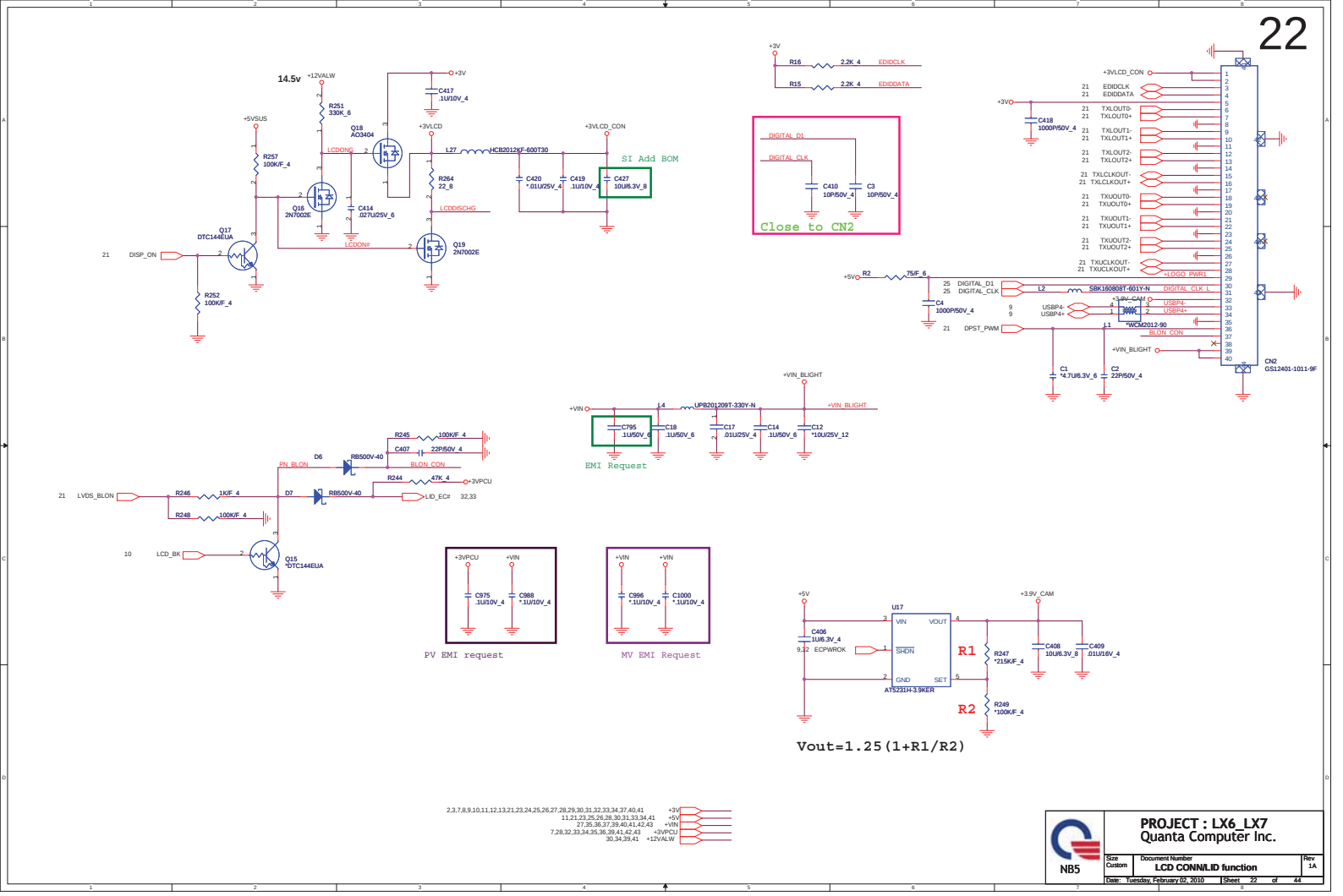

NB5

PROJECT : LX6_LX7
Quanta Computer Inc.

Size	Document Number	Rev
Custom	LCD CONN/LID function	1A

Date: Tuesday, February 02, 2010 Sheet 22 of 44

http://hobi-elektronika.net

CRT PORT

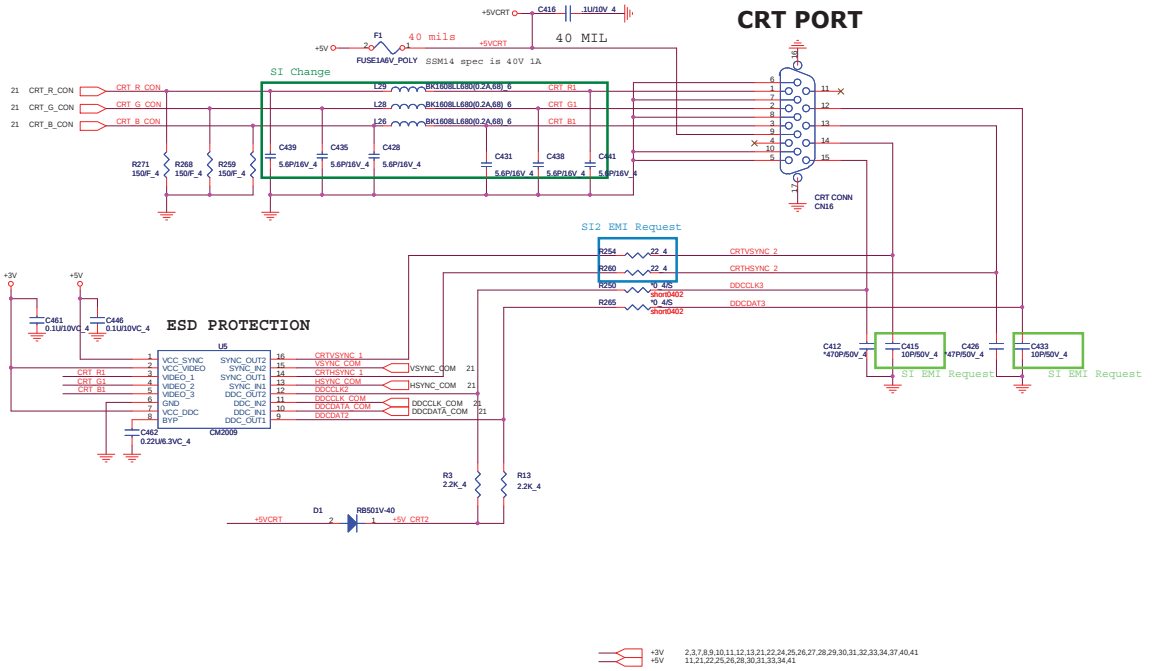

NB5	PROJECT : LX6_LX7 Quanta Computer Inc.	
Size: Custom	Document Number: CRT/HDMI Conn	Rev: 1A
Date: Tuesday, February 02, 2010	Sheet 23 of 44	

http://hobi-elektronika.net

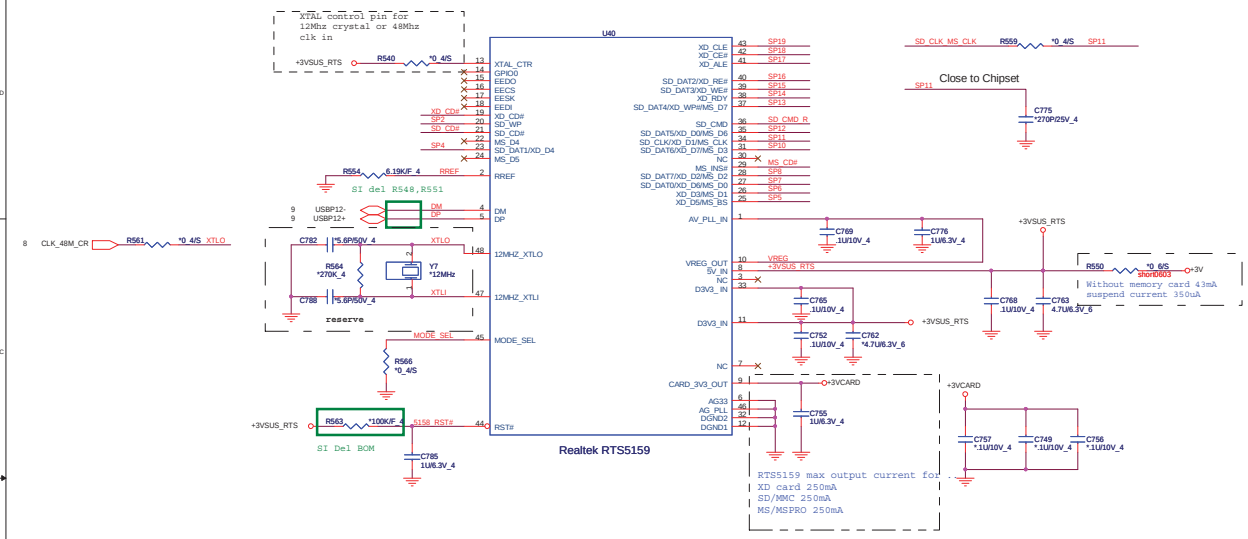

Note:

	SD/MMC	MS	XD
SP0			
SP1			XD_CD#
SP2	SD_WP		
SP3	SD_CD#		
SP4	SD_DAT1		
SP5			XD_D4
SP6		MS_BS	XD_D5
SP7	SD_DAT0	MS_D1	XD_D6
SP8	SD_DAT7	MS_D0	XD_D2
SP9		MS_D2	XD_D7
SP10	SD_DAT6	MS_INS#	XD_D3
SP11	SD_CLK	MS_D3	XD_D1
SP12	SD_DAT5	MS_SCLK	XD_D0
SP13	SD_DAT4		XD_WP#
SP14			XD_R/B#
SP15	SD_DAT3		XD_WE#
SP16	SD_DAT2		XD_RE#
SP17			XD_ALE
SP18			XD_CE#
SP19			XD_CLE

XD,MMC/SD,MS/MSP
5 IN1 CARD READER

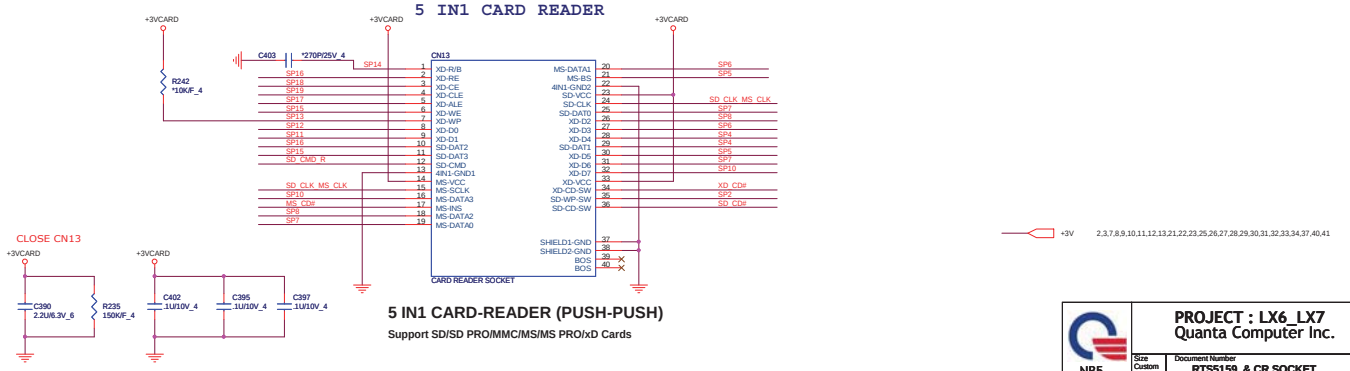

5 IN1 CARD-READER (PUSH-PUSH)

Support SD/SD PRO/MMC/MS/MS PRO/xD Cards

PROJECT : LX6_LX7
Quanta Computer Inc.

Size	Document Number	Rev
Custom	RTS5159 & CR SOCKET	1A

Date: Tuesday, February 02, 2010 | Sheet 24 of 44

http://hobi-elektronika.net

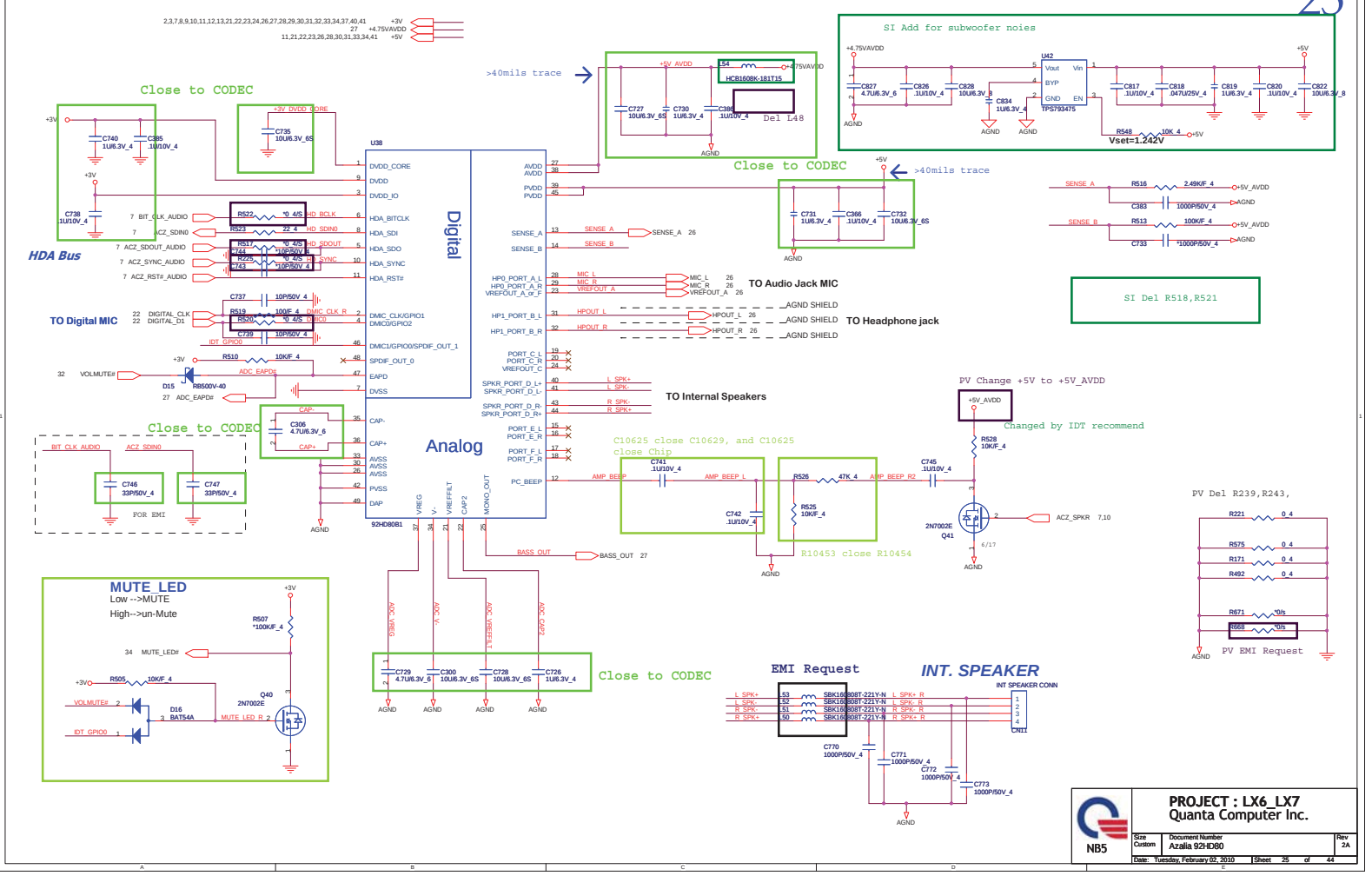

PROJECT : LX6_LX7
Quanta Computer Inc.

NB5

Size	Document Number	Rev
Custom	Azalia 92HD80	2A

Date: Tuesday, February 02, 2010 Sheet 25 of 44

http://hobi-elektronika.net

Line out

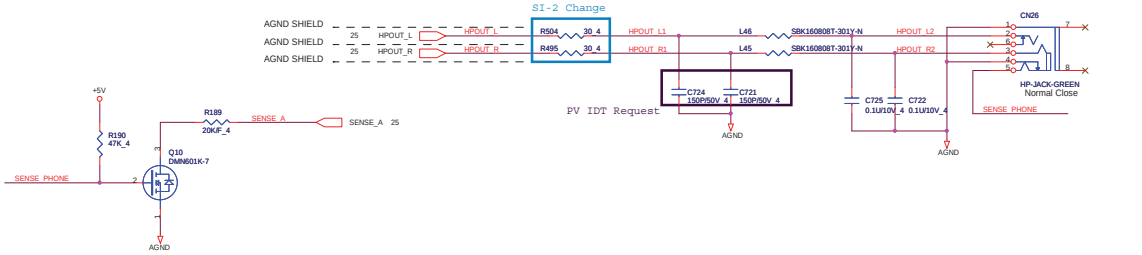

MIC

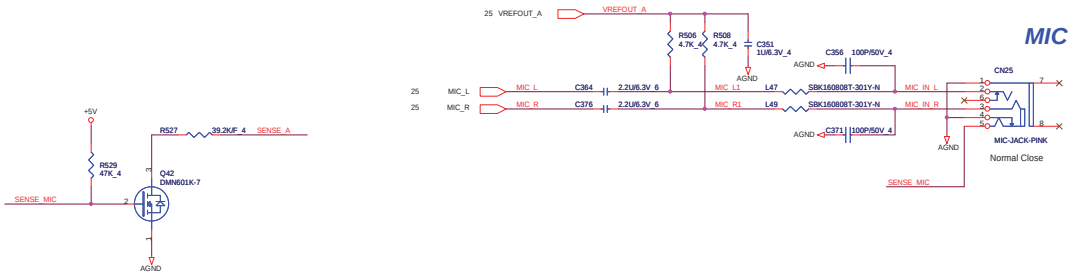

Accelerometer Sensor

SGT-LIS302DLTR interrupt pin default is low / active Hi , BIOS need to programming 22h to change status from active Hi to low

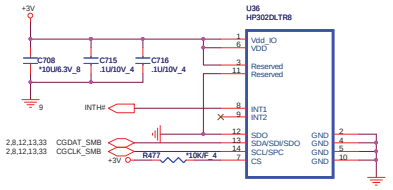

Pin 12: Low 38hex

Pin 12: unconnected/floating 3Ahex

NB5	PROJECT : LX6_LX7 Quanta Computer Inc.	
Size Custom	Document Number Audio Jack/Accelerometer	Rev 1A
Date: Tuesday, February 02, 2010	Sheet 26 of 44	

http://hobi-elektronika.net

EQ FOR SUBWOOFER

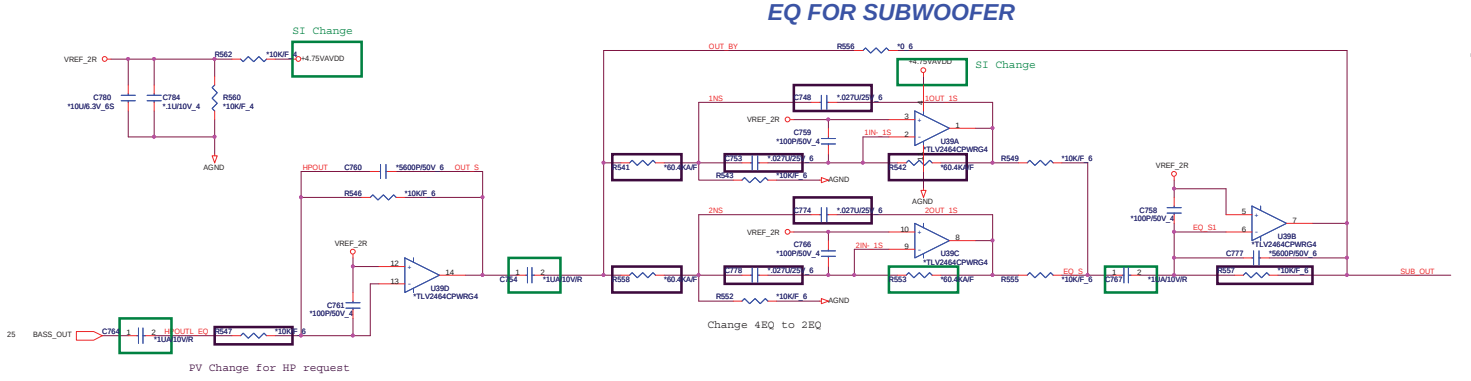

Sub-Woofer power

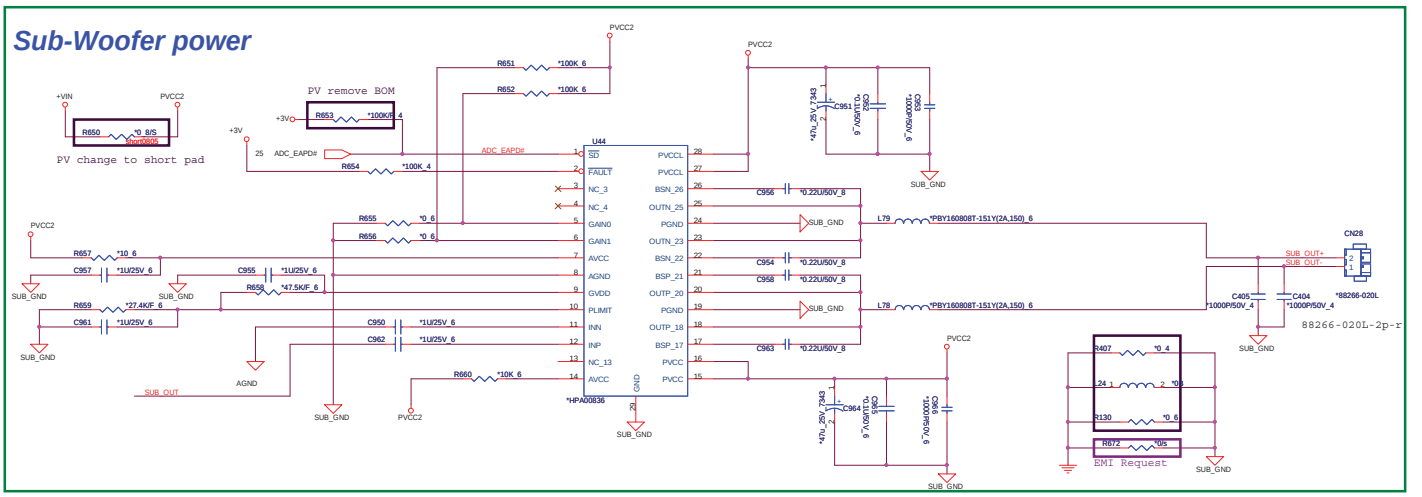

PV Del R574,R241,R240

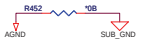

GAIN1	GAIN0	dB
0	0	12
0	1	18
1	0	23.6
1	1	36

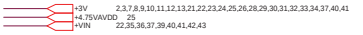

NB5

PROJECT : LX6_LX7
Quanta Computer Inc.

Size	Document Number	Rev
Custom	SUBWOOFER (EQ & AMP.)	1A

Date: Tuesday, February 02, 2010 Sheet 27 of 44

http://hobi-elektronika.net

BLUETOOTH

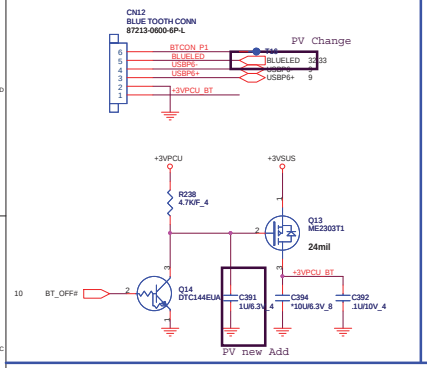

RIGHT SIDE USBX2 for 17"

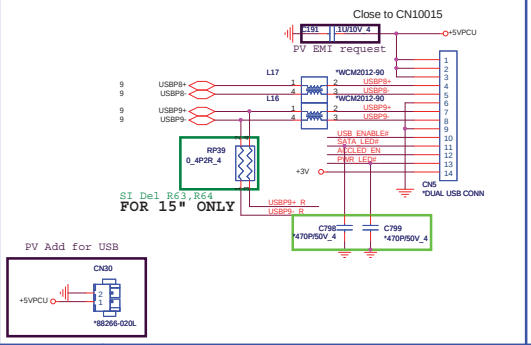

RIGHT SIDE USB for 15"

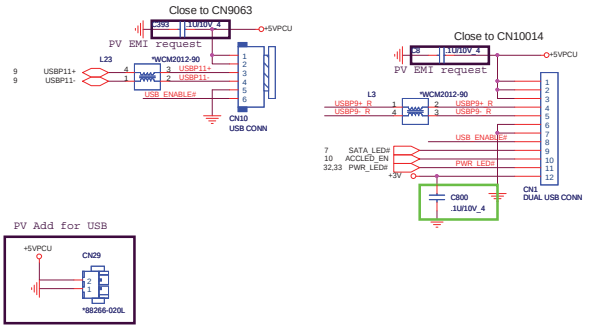

USB fingerprint CON

1. USBP2-
2. USBP2+
3. +3V
4. +5V
5. SYSTEM GND
6. SYSTEM GND

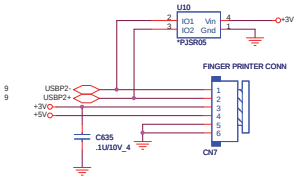

E-SATA

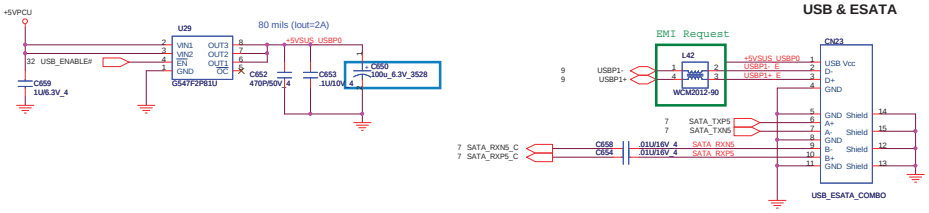

LEFT USB PORT

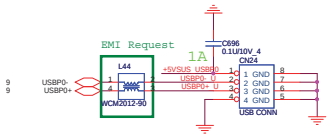

Touch screen for 15"

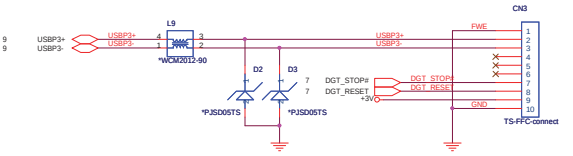

NB5

PROJECT : LX6_LX7
Quanta Computer Inc.

Size	Document Number	Rev
Custom	BT/WC/FT/Touchscreen	1A

Date: Tuesday, February 02, 2010 | Sheet 28 of 44

http://hobi-elektronika.net

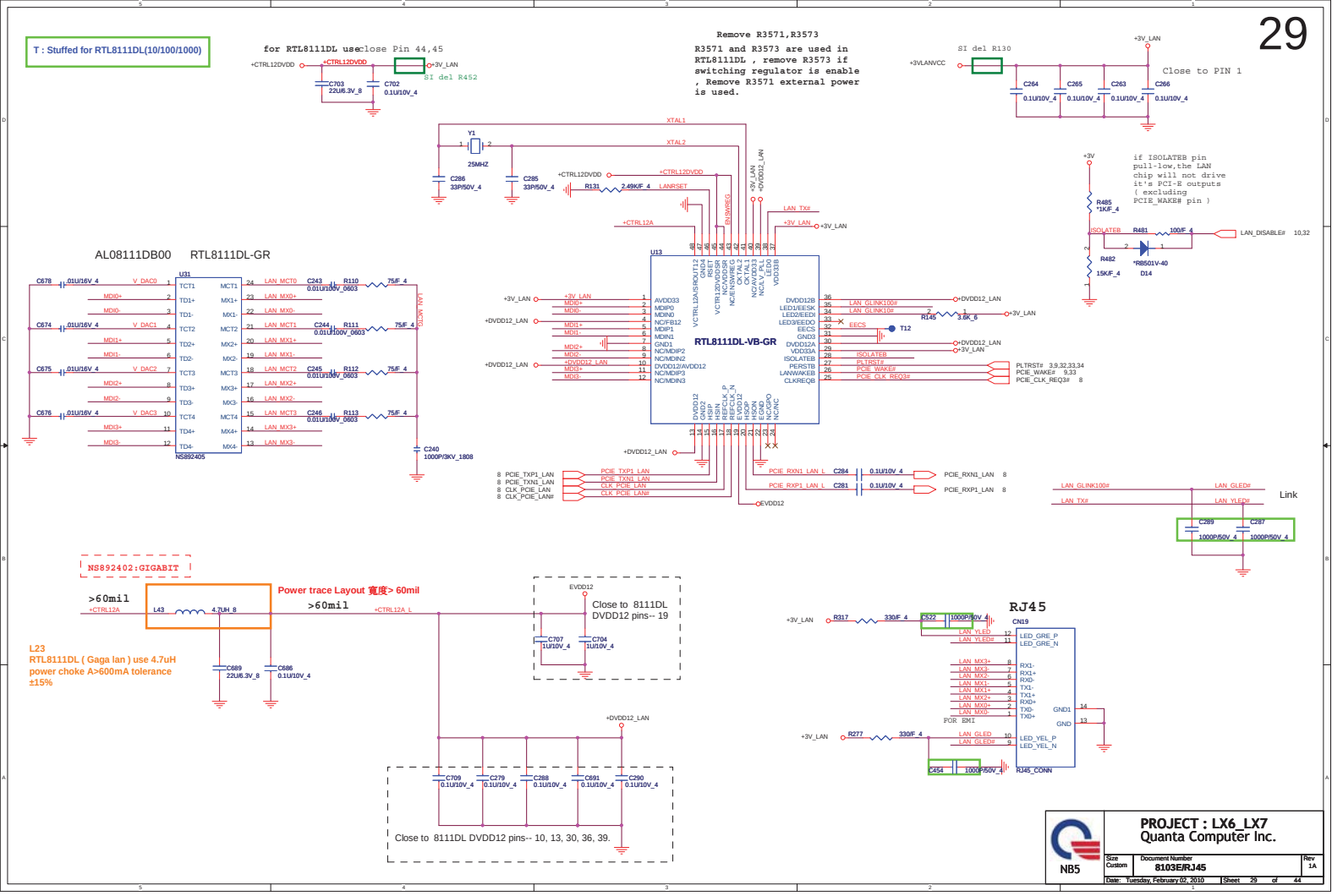

http://hobi-elektronika.net

SATA HDD CONNECTOR

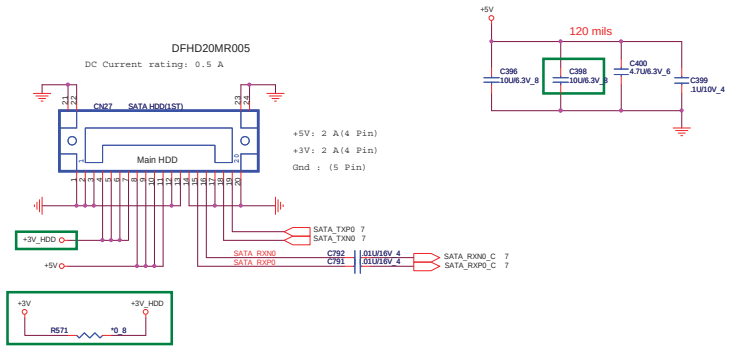

SATA CD-ROM

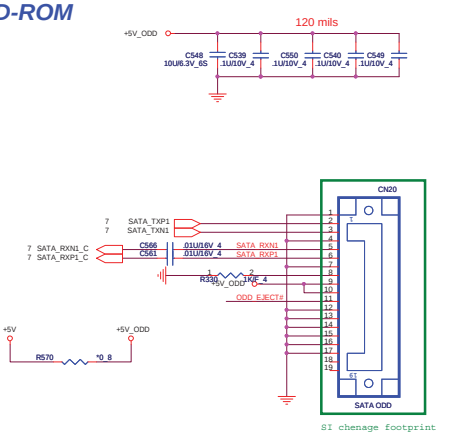

SATA_2 CONNECTOR FOR 17.3"

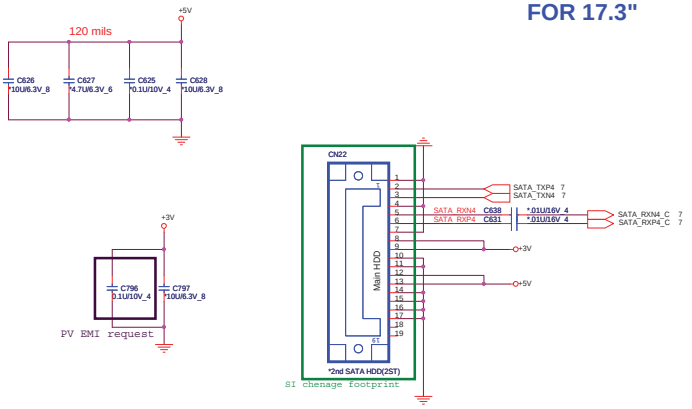

SI Add

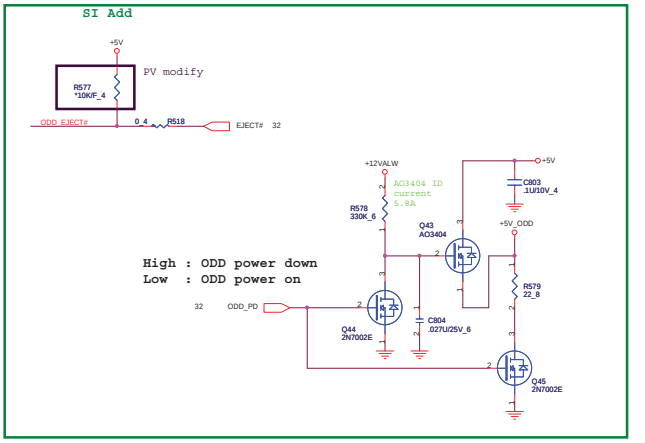

+3V 2,3,7,8,9,10,11,12,13,21,22,23,24,25,26,27,28,29,31,32,33,34,37,40,41
+5V 11,21,22,23,25,26,28,31,33,34,41
+12VALW 22,34,39,41

NB5

PROJECT : LX6_LX7
Quanta Computer Inc.

Size	Document Number	Rev
Custom	ODD/HDD/ANT	1A

Date: Tuesday, February 02, 2010 Sheet 30 of 44

http://hobi-elektronika.net

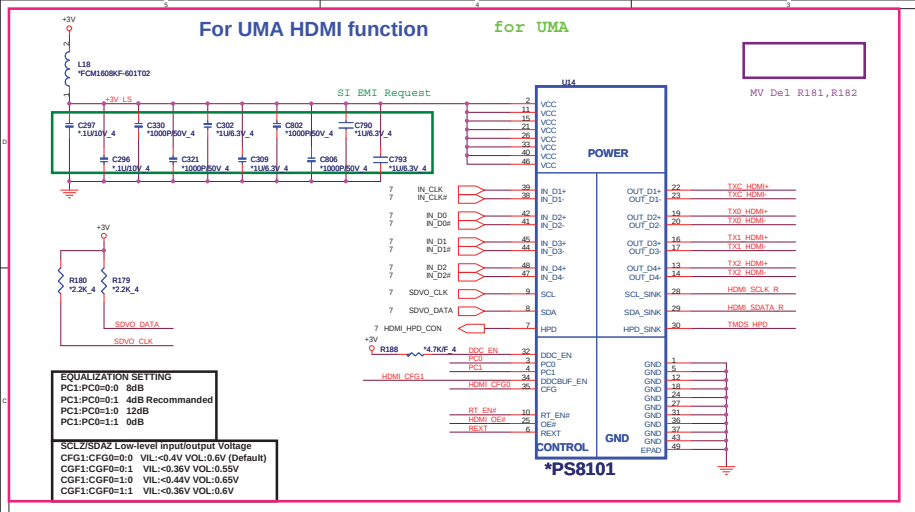

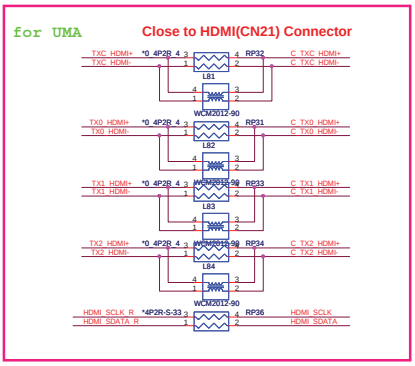

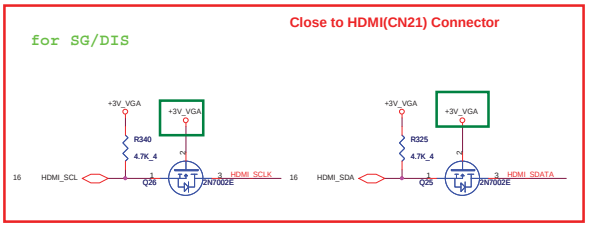

Signals		PDT	CHR	PIM
PC1	Ra	NC	4.7K	NC
HDMI_CFG0	Rb	NC	NC	NC
HDMI_CFG1	Rc	4.7K	NC	NC
REXT	Rd	499	1.2K	4.7K
PC1	Re	NC	NC	4.7K
HDMI_OE#	Rf	NC	4.7K	NC
PC0	Rg	4.7K	4.7K	4.7K

Vendor:PDT P/N:AL008101000
Vendor:CHR P/N:AL007318002
Vendor:PIM P/N:ALP411LS004

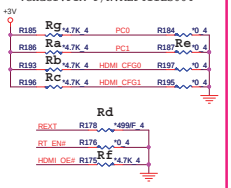

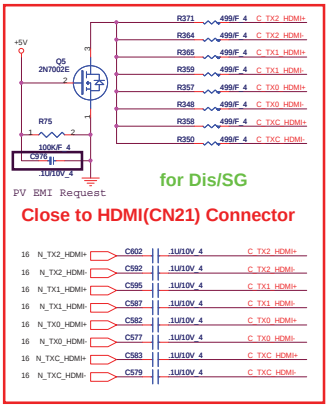

SI Del Q29,R378,R413,R415

MV Del R670,R669

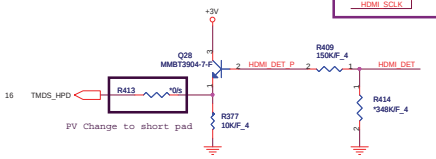

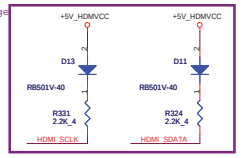

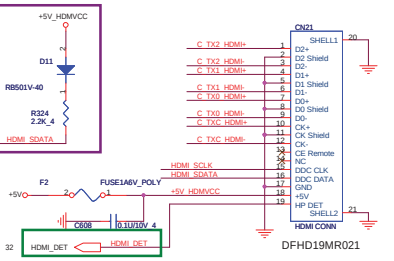

PV Del R374,R368,R378 BOM

for UMA/DIS/SG

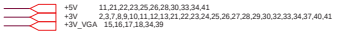

+5V	11,21,22,23,25,26,28,30,33,34,41
+3V	2,3,7,8,9,10,11,12,13,21,22,23,24,25,26,27,28,29,30,32,33,34,37,40,41
+3V_VGA	15,16,17,18,34,39

NB5

PROJECT : LX6_LX7
Quanta Computer Inc.

Size	Document Number	Rev
Custom	KB/POWER CONN	1A

Date: Tuesday, February 02, 2010 Sheet 31 of 44

http://hobi-elektronika.net

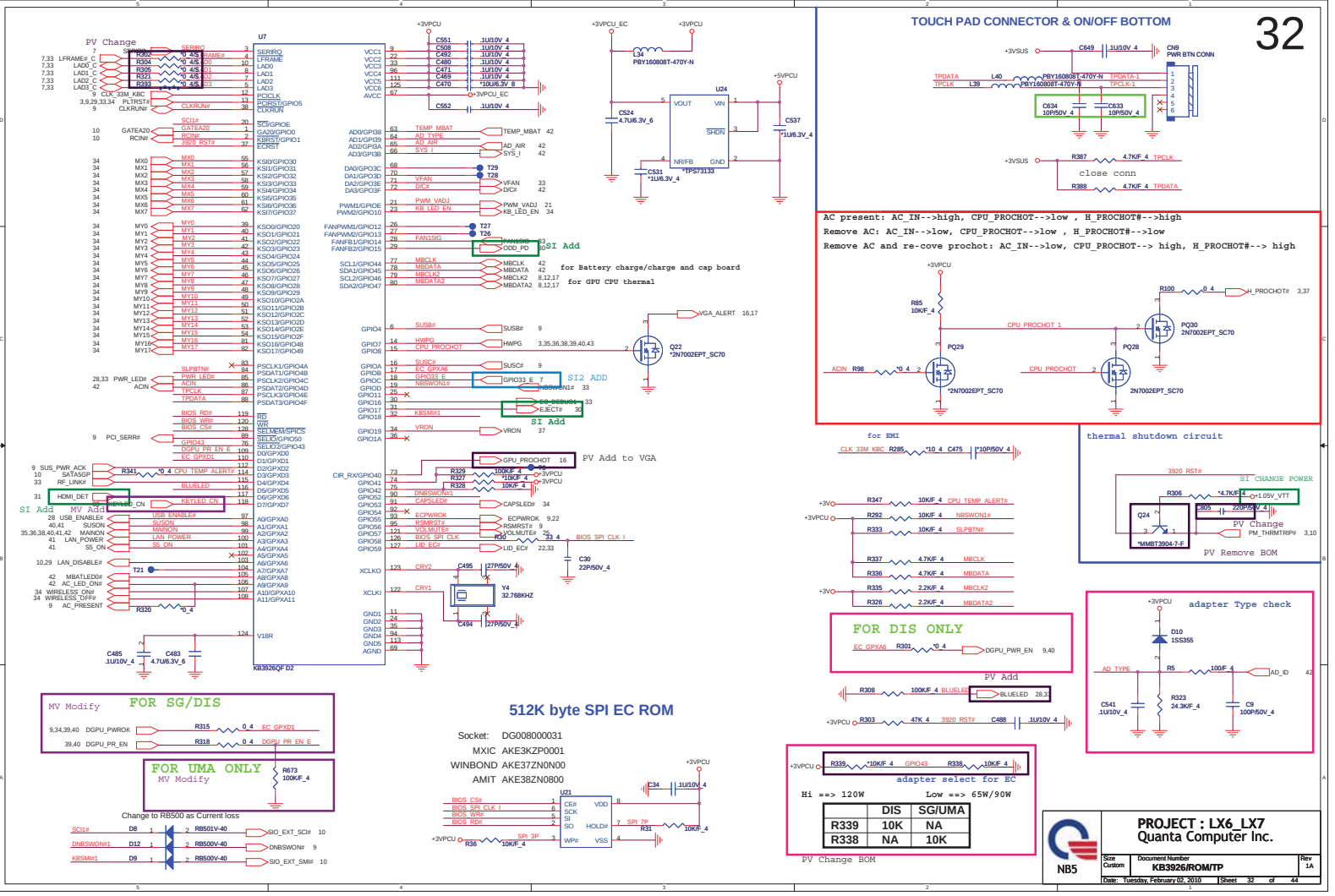

http://hobi-elektronika.net

Mini PCI-E Card 1
WLAN

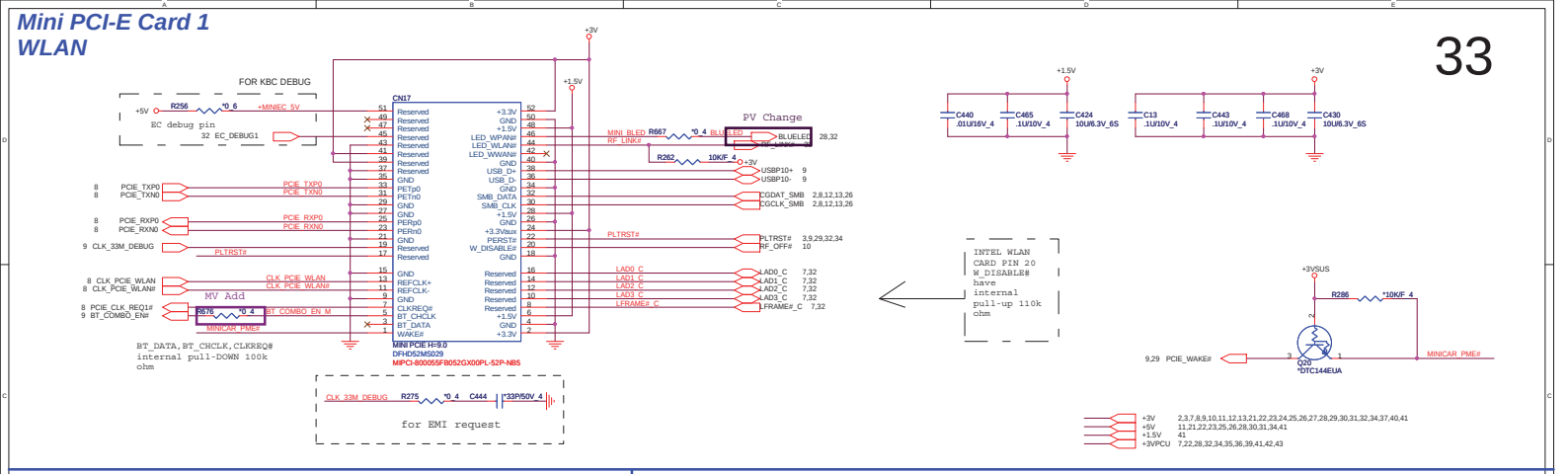

CPU FAN

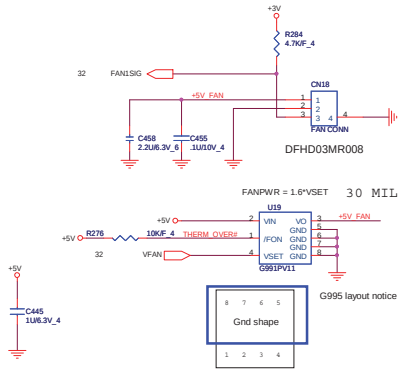

POWER BOTTON CONNECT

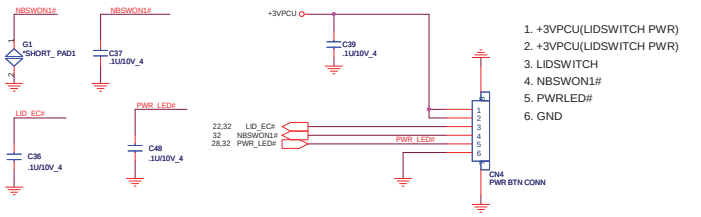

NB5	PROJECT : LX6_LX7 Quanta Computer Inc.	
Size: Custom	Document Number: MINI PCIE CONN/FAN	Rev: 1A
Date: Tuesday, February 02, 2010	Sheet 33 of 44	

http://hobi-elektronika.net

KEYBOARD PULL-UP

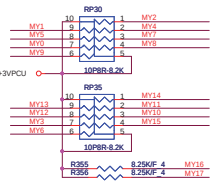

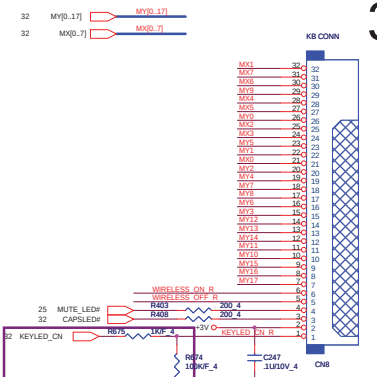

clear ABS 758 resin for key cap.
7 LEDs for 15.4" (total LED current 140mA)
11 LEDs for 17" (Total LED current 220mA)

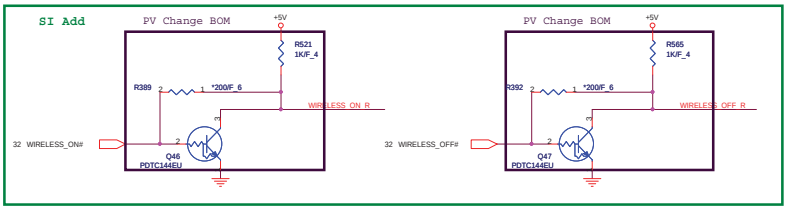

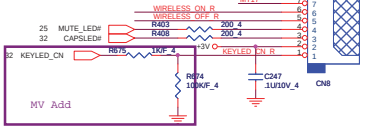

KB backlight for 15"

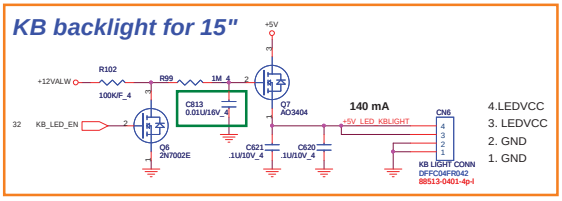

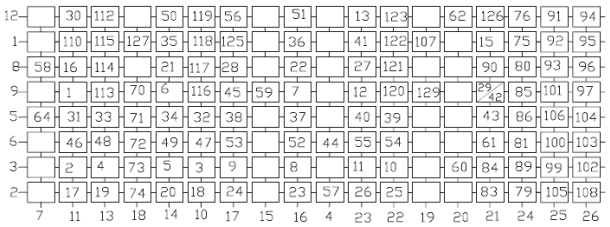

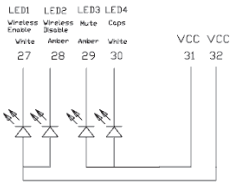

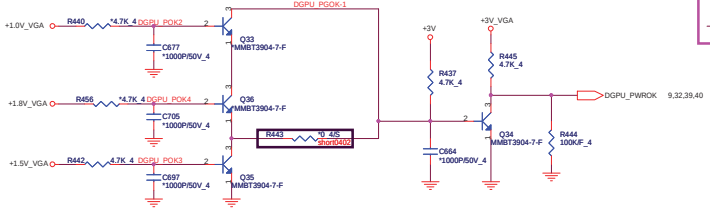

FOR DIS ONLY

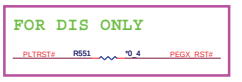

FOR SG ONLY

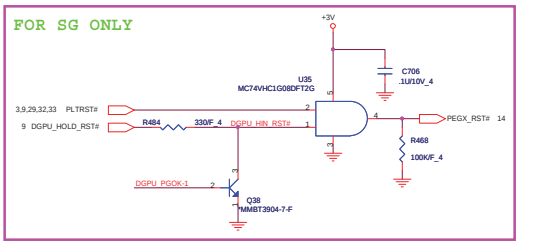

+3V	2,3,7,8,9,10,11,12,13,21,22,23,24,25,26,27,28,29,30,31,32,33,37,40,41
+5V	11,21,22,23,25,26,28,30,31,33,41
+3VPCU	7,22,28,32,33,35,36,39,41,42,43
+3V_VGA	15,16,17,18,31,39
+12VALW	22,30,39,41
+1.0V_VGA	14,16,18,40
+1.5V_VGA	15,18,19,20,39
+1.8V_VGA	14,16,18,39

NB5

PROJECT : LX6_LX7
Quanta Computer Inc.

Size	Document Number	Rev
Custom	KB	1A

Date:Tuesday, February 02, 2010 Sheet 34 of 44

http://hobi-elektronika.net

DC/DC +3V_ALW/+5V_ALW/+5V_ALW2 /+15V_ALW

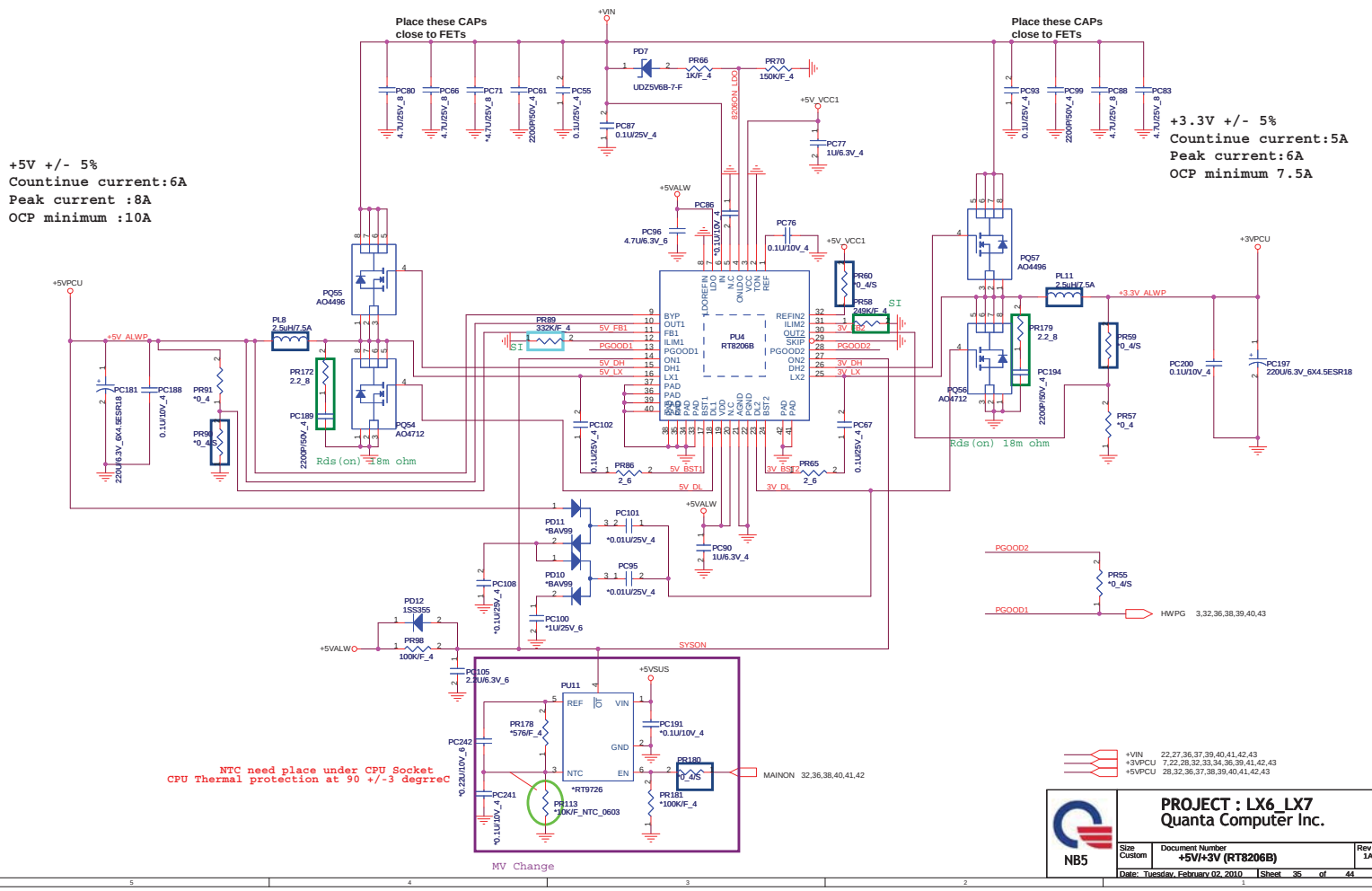

http://hobi-elektronika.net

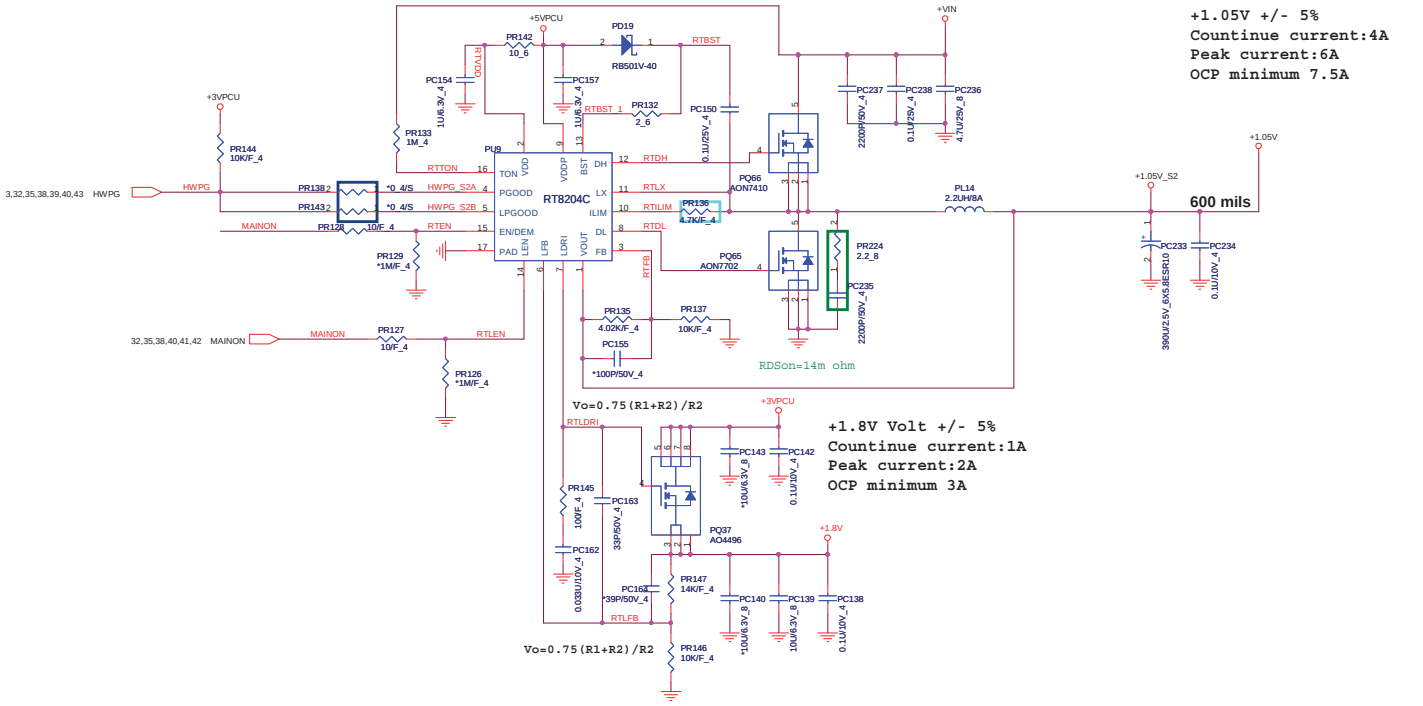

+1.8V	5,10,11,21,41
+VIN	22,27,35,37,39,40,41,42,43
+1.05V	2,7,8,9,11,37,43
+3VPCU	7,22,28,32,33,34,35,39,41,42,43
+5VPCU	28,32,35,37,38,39,40,41,42,43

NB5

PROJECT : LX6_LX7
Quanta Computer Inc.

Size	Document Number	Rev
Custom	+1.05V/+1.8V (RT8204C)	1A

Date: Tuesday, February 02, 2010 | Sheet 36 of 44

http://hobi-elektronika.net

	DIS (Clarksfild)	SG/UMA (Arburndle)
不上件		PQ45 PQ46 PQ43 PQ44
PR14	1.91k(OCP=63A) (CS21912FB13)	1.69k(OCP=55A) (CS21692FB01)
PR34	4.7k (CS24702FB10)	4.87k (CS24872FB07)

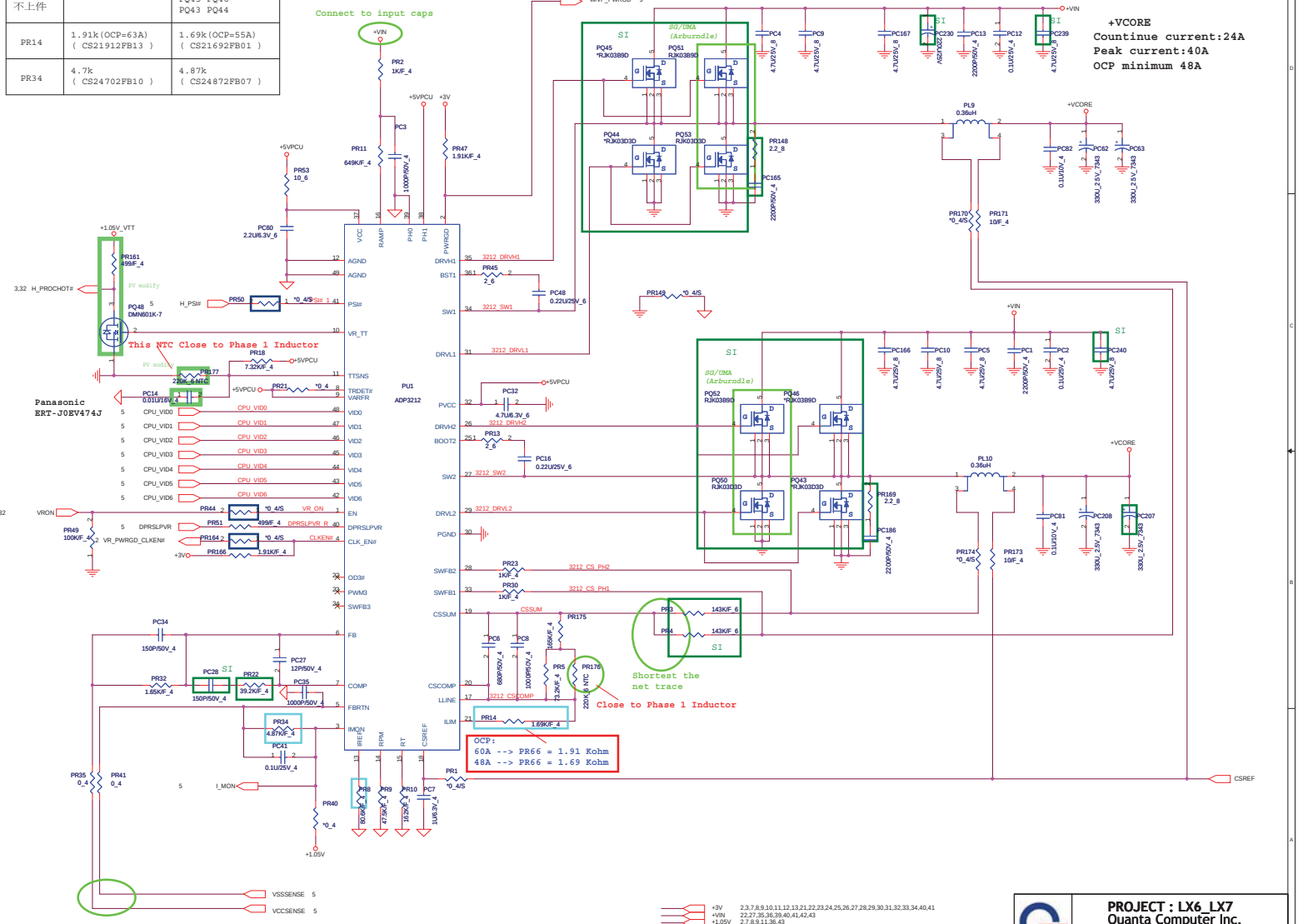

+3V	2,3,7,8,9,10,11,12,13,21,22,23,24,25,26,27,28,29,30,31,32,33,34,40,41
+VIN	22,27,35,36,39,40,41,42,43
+1.05V	2,7,8,9,11,36,43
+5VPCU	28,32,35,36,38,39,40,41,42,43
+VCORE	5
+1.05V_VTT	3,5,10,11,32,38,43

NB5

PROJECT : LX6_LX7
Quanta Computer Inc.

Size	Document Number	Rev
Custom	CPU Core (ADP3212)	1A

Date: Tuesday, February 02, 2010 | Sheet 37 of 44

http://hobi-elektronika.net

	SG	DIS	UMA
PR156 PR26 PR29 PQ8	Stuff	Stuff	no Stuff
PR157	40.2K (CS34022FB15)	40.2K (CS34022FB15)	38.3K (CS33832FB08)

	Clarksfild	Arraindle
PU10	VT358 (AL000358U00)	VT357 (AL000357U00)
PR160	40.2K (CS34022FB15)	36K (CS33602FB15)
PR158	5.76K (CS25762FB01)	6.49K (CS26492FB23)

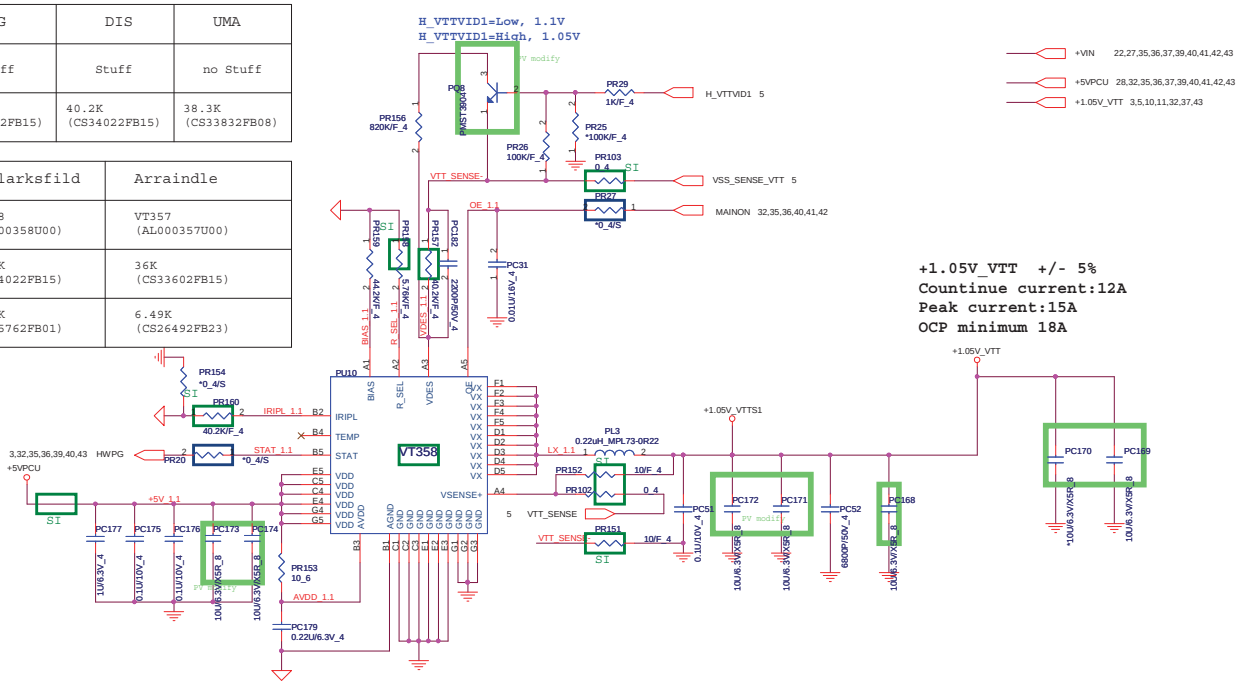

PROJECT : LX6_LX7
Quanta Computer Inc.

NB5

Size	Document Number	Rev
Custom	+1.05V_VTT (VT358)	1A

Date: Tuesday, February 02, 2010 | Sheet 38 of 44

http://hobi-elektronika.net

VGA Core

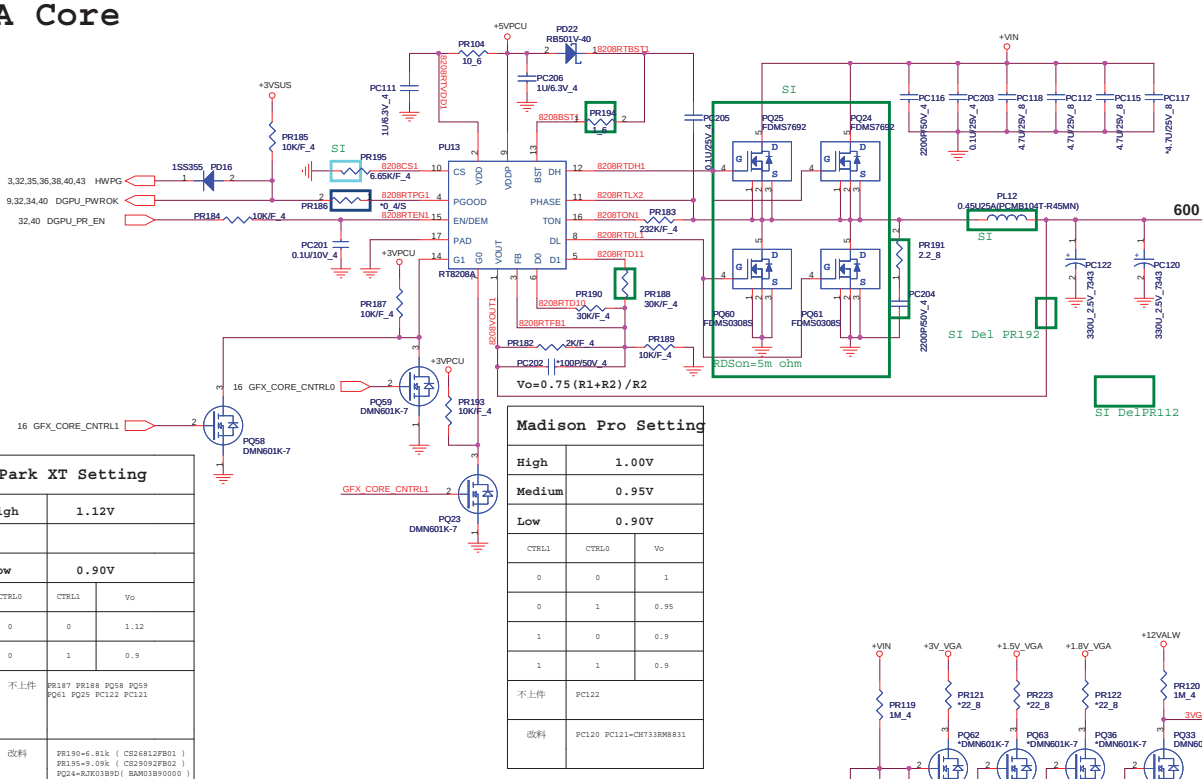

+VGACORE +/- 5%
Countinue current:19A
Peak current:21A
OCP minimum 26A

Park XT Setting		
High	1.12V	
Low	0.90V	
CTRL0	CTRL1	Vo
0	0	1.12
0	1	0.9
不上件	PR187 PR188 PQ58 PQ59 PQ61 PQ25 PC122 PC121	
改料	PR190=6.81k (CS26812FB01) PR195=9.09k (CS29092FB02) PQ24=RJK03B9D(BAM03B90000) PQ60=RJK03D3D(BAM03D30000)	

Madison Pro Setting		
High	1.00V	
Medium	0.95V	
Low	0.90V	
CTRL1	CTRL0	Vo
0	0	1
0	1	0.95
1	0	0.9
1	1	0.9
不上件	PC122	
改料	PC120 PC121=CH733RM8831	

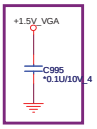

MV EMI Request

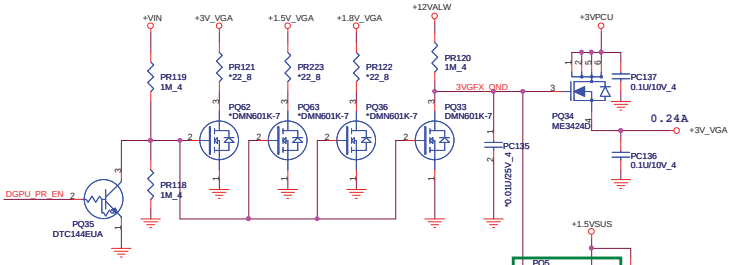

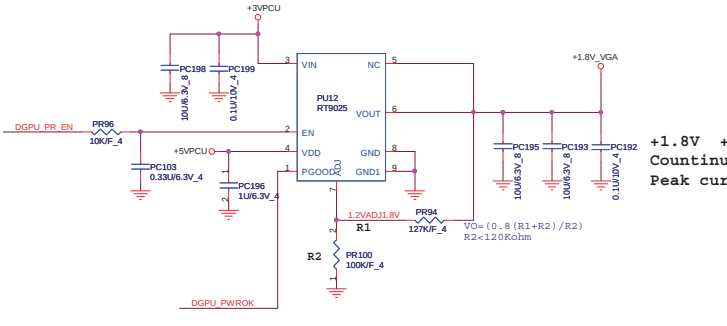

+1.8V +/- 5%
Countinue current:1.2A
Peak current:3A

+VIN 22,27,35,36,37,40,41,42,43
+3VPCU 7,22,28,32,33,34,35,36,41,42,43
+5VPCU 28,32,35,36,37,38,40,41,42,43
+1.5VSUS 5,12,13,40,41
+3V_VGA 15,16,17,18,31,34
+VGACORE 18
+1.5V_VGA 15,18,19,20,34
+1.8V_VGA 14,16,18,34
+12VALW 22,30,34,41

NB5	PROJECT : LX6_LX7 Quanta Computer Inc.		
	Size	Document Number GPU CORE(ISL6264)	Rev 1A
	Date: Tuesday, February 02, 2010	Sheet 39 of 44	

http://hobi-elektronika.net

+1.5V +/- 5%
Countinue current:6A
Peak current:12A
OCP minimum 15A

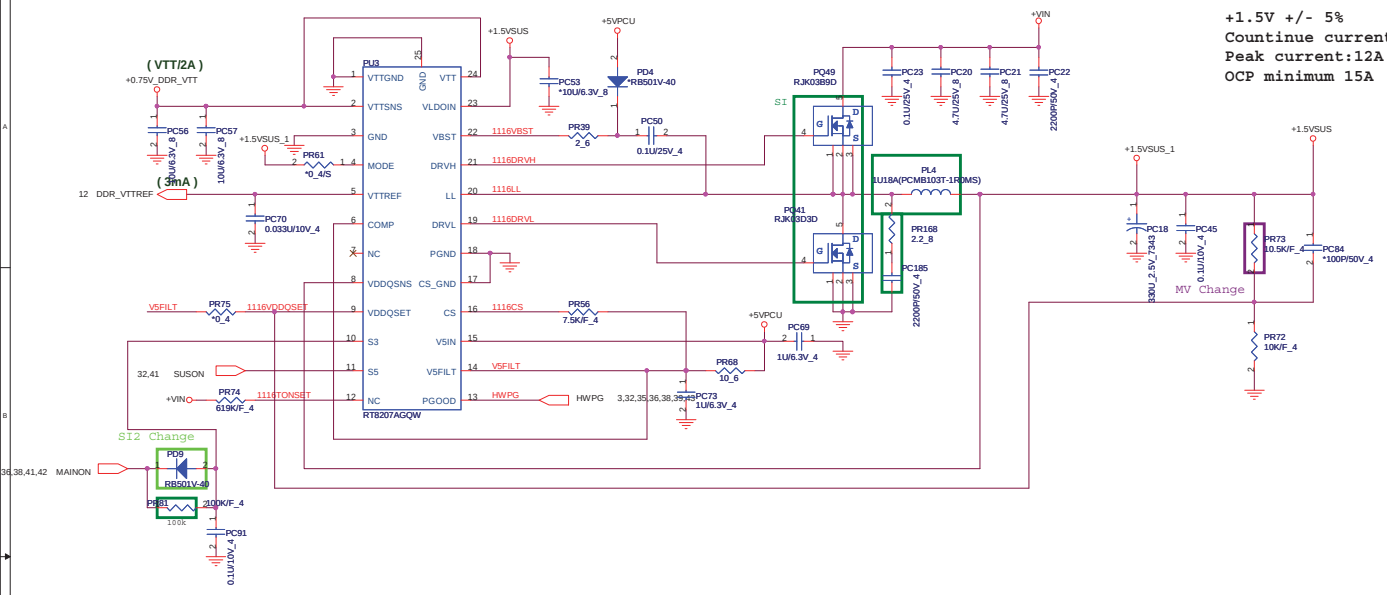

SG & Discrete Only

+1.0V +/- 5%
Countinue current:1.7A
Peak current:3A

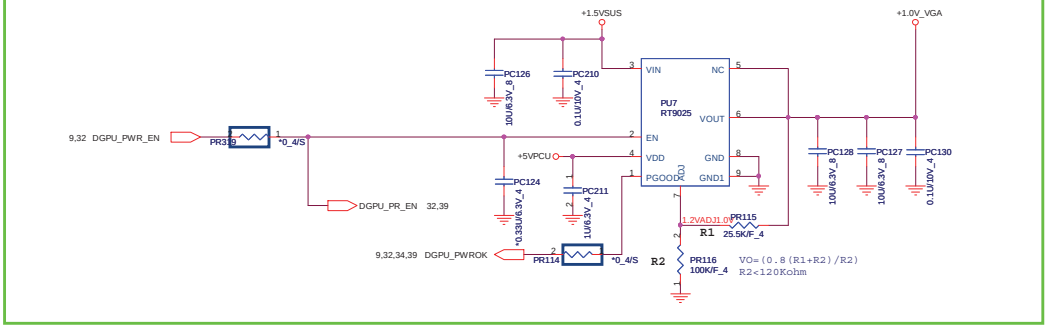

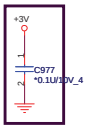

PV EMI Request

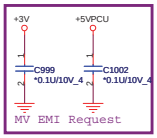

MV EMI Request

+3V	2,3,7,8,9,10,11,12,13,21,22,23,24,25,26,27,28,29,30,31,32,33,34,37,41
+VIN	22,27,35,36,37,39,41,42,43
+5VPCU	28,32,35,36,37,38,39,41,42,43
+1.5VSUS	5,12,13,39,41
+1.0V_VGA	14,16,18,34
+0.75V_DDR_VTT	12,13,41

NB5

PROJECT : LX6_LX7
Quanta Computer Inc.

Size	Document Number	Rev
Custom	DDR3 (RT8207)	1A

Date: Tuesday, February 02, 2010 | Sheet 40 of 44

http://hobi-elektronika.net

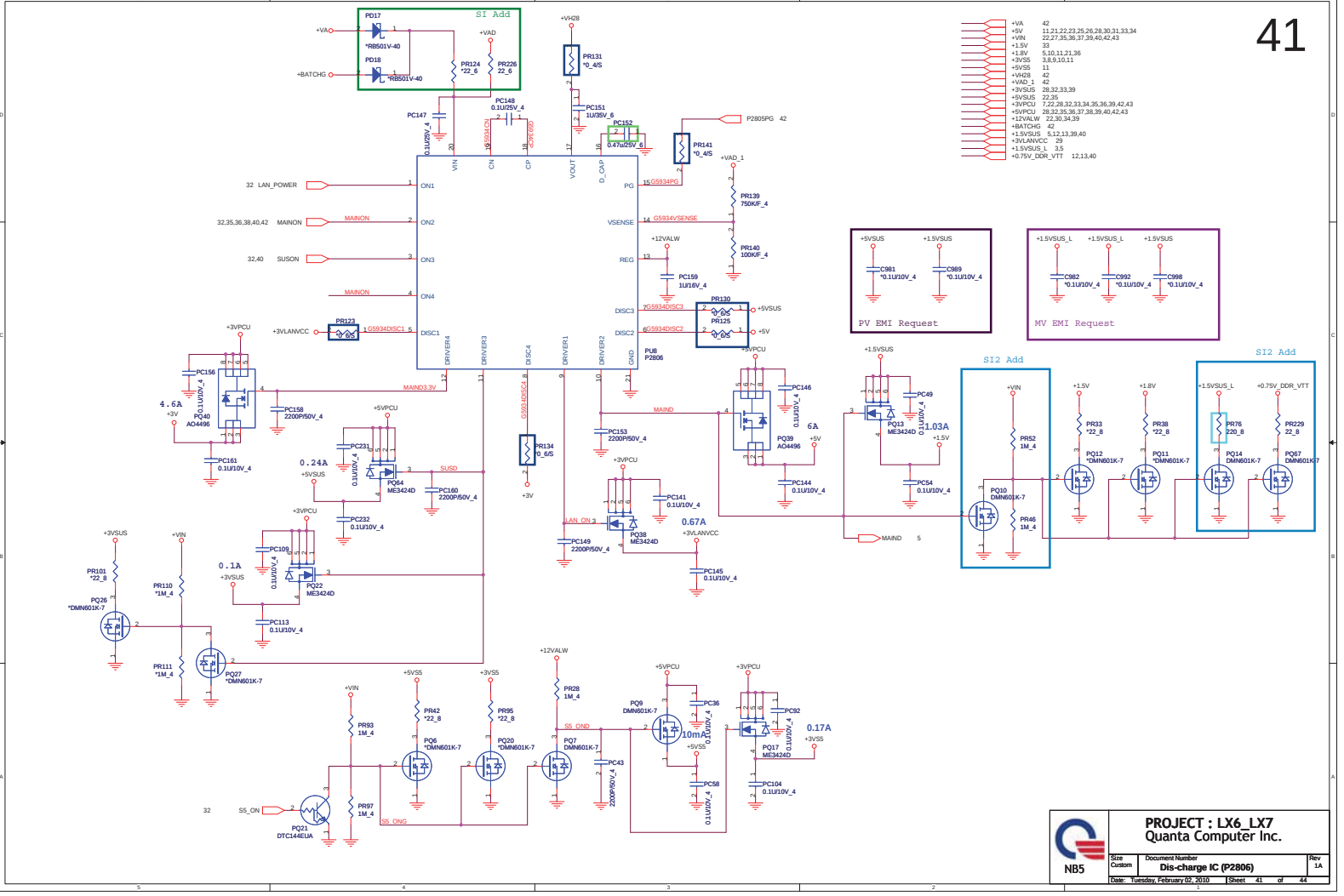

http://hobi-elektronika.net

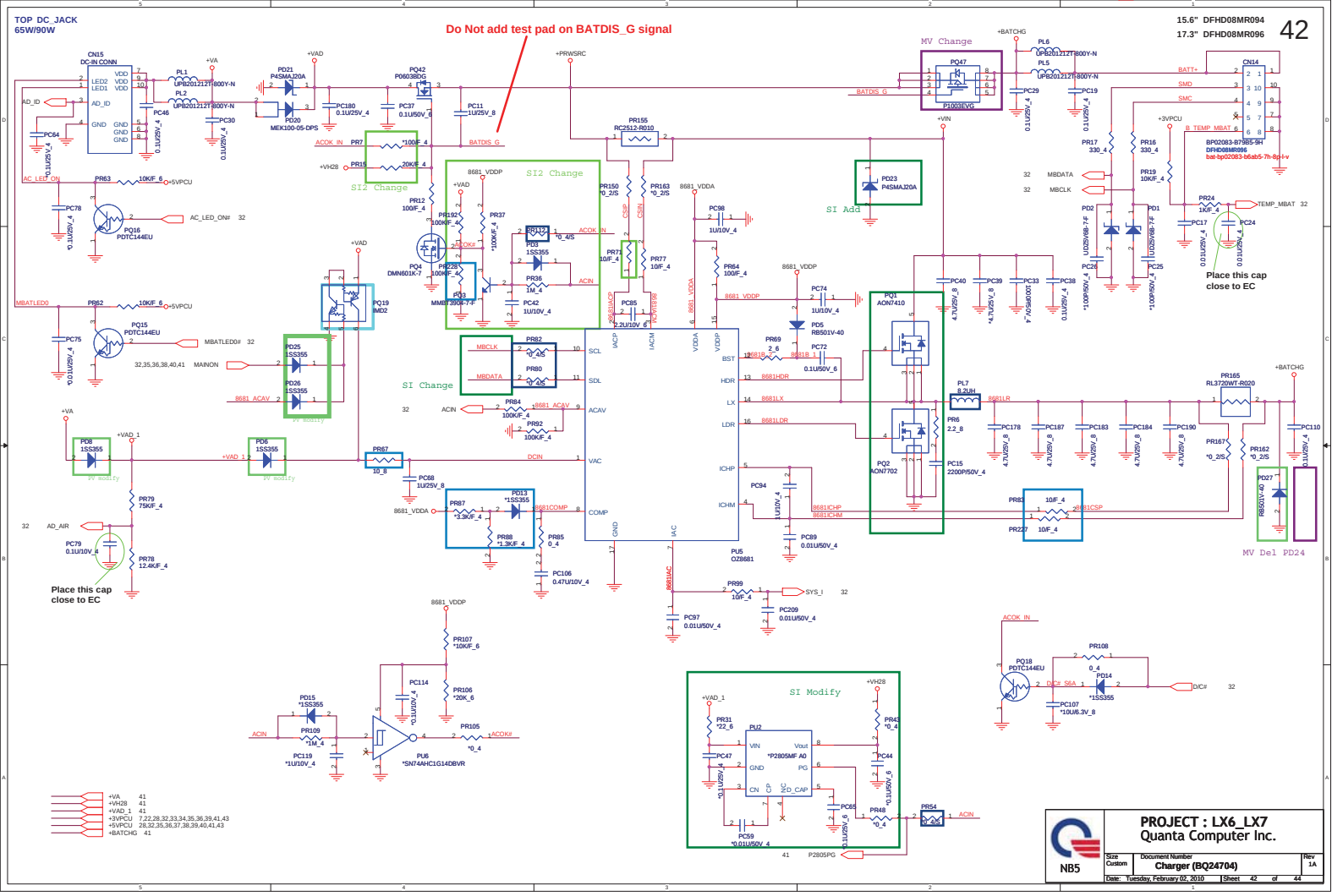

http://hobi-elektronika.net

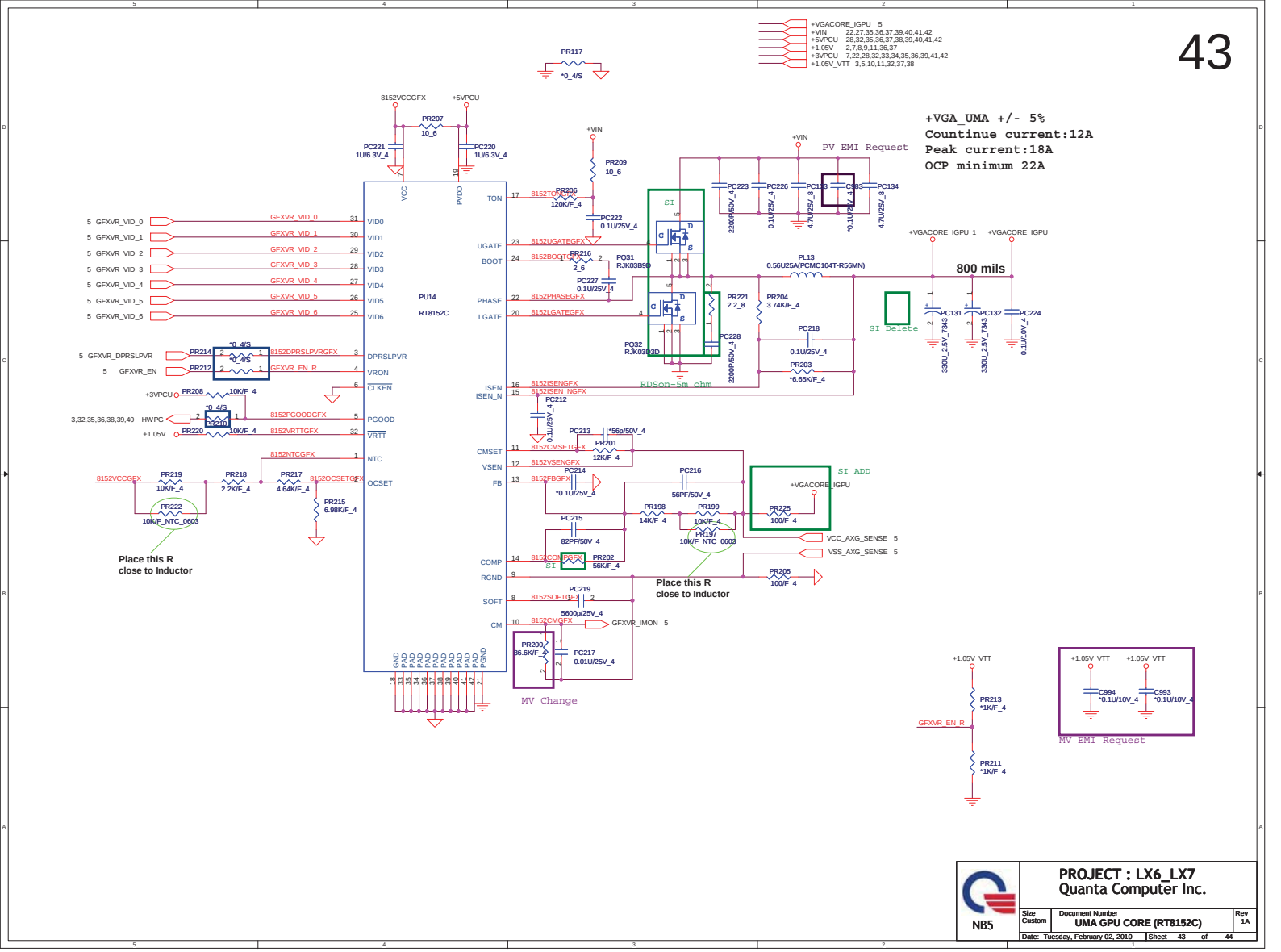

http://hobi-elektronika.net

NB5	PROJECT : LX6_LX7 Quanta Computer Inc.	
Size Custom	Document Number UMA GPU CORE (RT8152C)	Rev 1A
Date: Tuesday, February 02, 2010	Sheet 43 of 44	

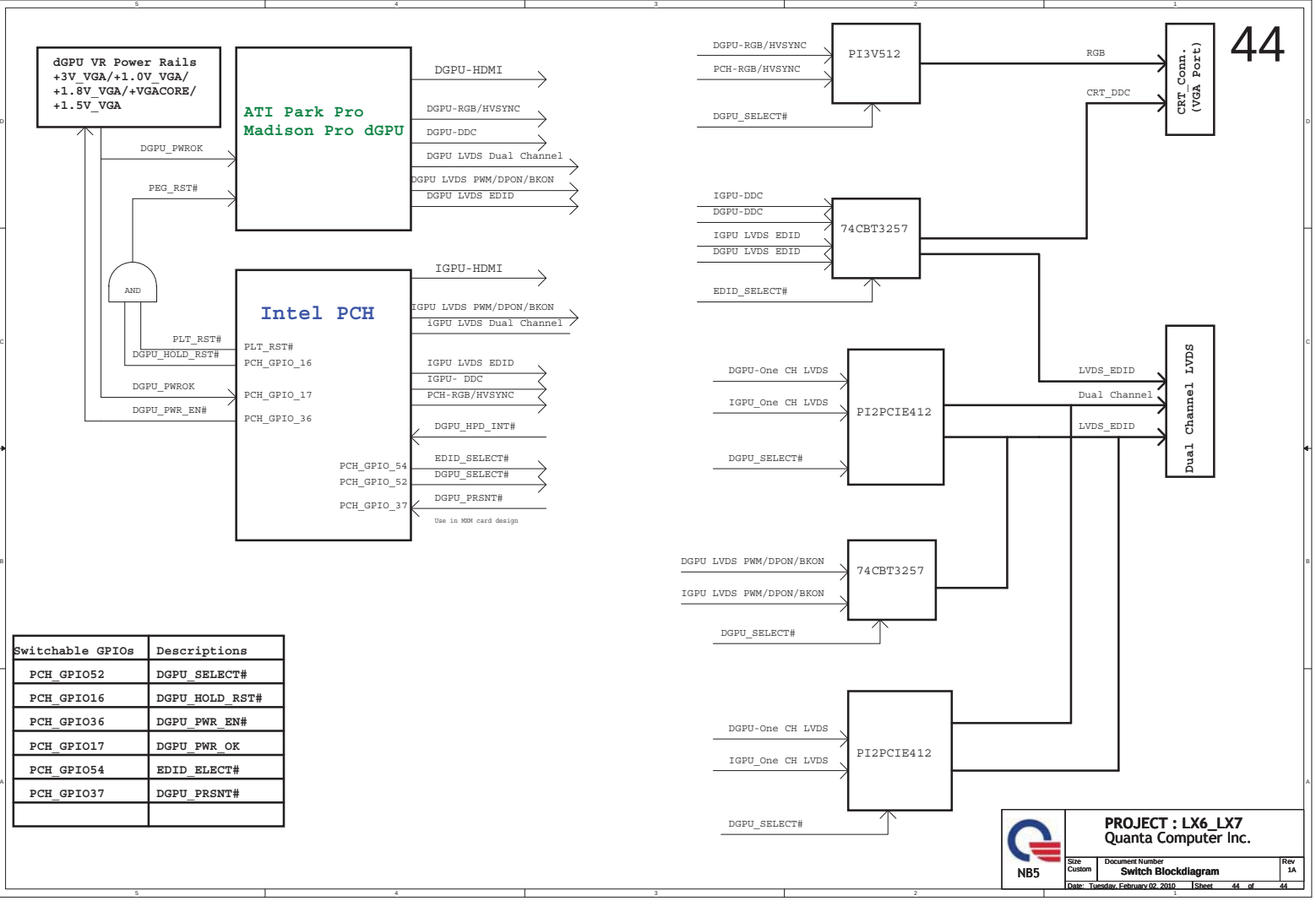

Switchable GPIOs	Descriptions
PCH_GPIO52	DGPU_SELECT#
PCH_GPIO16	DGPU_HOLD_RST#
PCH_GPIO36	DGPU_PWR_EN#
PCH_GPIO17	DGPU_PWR_OK
PCH_GPIO54	EDID_ELECT#
PCH_GPIO37	DGPU_PRSNT#

NB5

PROJECT : LX6_LX7
Quanta Computer Inc.

Size	Document Number	Rev
Custom	Switch Blockdiagram	1A

Date: Tuesday, February 02, 2010 Sheet 44 of 44

http://hobi-elektronika.net