1. TITLE PAGE
2. EC HISTORY
3. CPU (1/3)
4. CPU (2/3)
5. CPU (3/3)
6. DECAP FOR VCCCPU1R2B
7. CAPS FOR VCCCPUCORE
8. GMCH3-M(1/3):HOST I/F
9. GMCH3-M(2/3):MEMORY
10. GMCH3-M(3/3):AGP/HUB
11. REF VOL & DECAPS
12. DIMM CARD CONNECTOR
13. CLOCK GEN(C9827)
14. ICH3-M(1/3)
15. ICH3-M(2/3)
16. ICH3-M(3/3)
17. HDD I/F CONNECTOR
18. USB I/F
19. FWH,RTC BAT.
20. H8S/2169A
21. KEYBOARD , PS/2
22. MISC G/A (PMH-2)
23. POWER ON LOGIC
24. SUPER I/O PC87392
25. SERIAL I/F
26. (BLANK)
27. EXT CRT I/F
28. CARD BUS PCI1420GHK(1/2)
29. CARD BUS PCI1420GHK(2/2)
30. CARD BUS POWER CTRL
31. CARD BUS SLOT
32. AUDIO CS4299
33. AUDIO MISC
34. AUDIO INT MIC
35. AUDIO CONNECTOR
36. AUDIO EXT MIC I/F
37. AUDIO SPK CONN
38. AUDIO HDP AMP AN17000A
39. MINI PCI
40. PCI BUS SWITCH
41. DOCKING
42. CLEAN SHEET BAY
43. (BLANK)
44. CDC CONNECTOR
45. THERMAL SENSOR
46. I2CBUS/SMBUS
47. IR MODULE
48. TRISTAR T64C(1/4)
49. TRISTAR T64C(2/4)
50. TRIATAR T64C(3/4)
51. TRIATAR T64C(4/4)
52. (BLANK)
53. (BLANK)
54. TV-OUT
55. (BLANK)
56. LCD I/F CONNECTOR
57. FAN CONTROL
58. I/O SUB CONN,RJ11 CONN
59. DCDC DC-IN AND CHARGER
60. DCDC BATTERY,VCCSW
61. DCDC TRICKLE CHARGER
62. DCDC BATTERY MONITOR
63. DCDC VCC3M/VCC5M(MAX1631)
64. DCDC VCCCPUCORE
65. DCDC VCCCPU1R5B
66. DCDC VCC1R8
67. DCDC KOZAK
68. DCDC VCC3AUX
69. (BLANK)
70. DCDC VID MUX

www.laptop-schematics.com

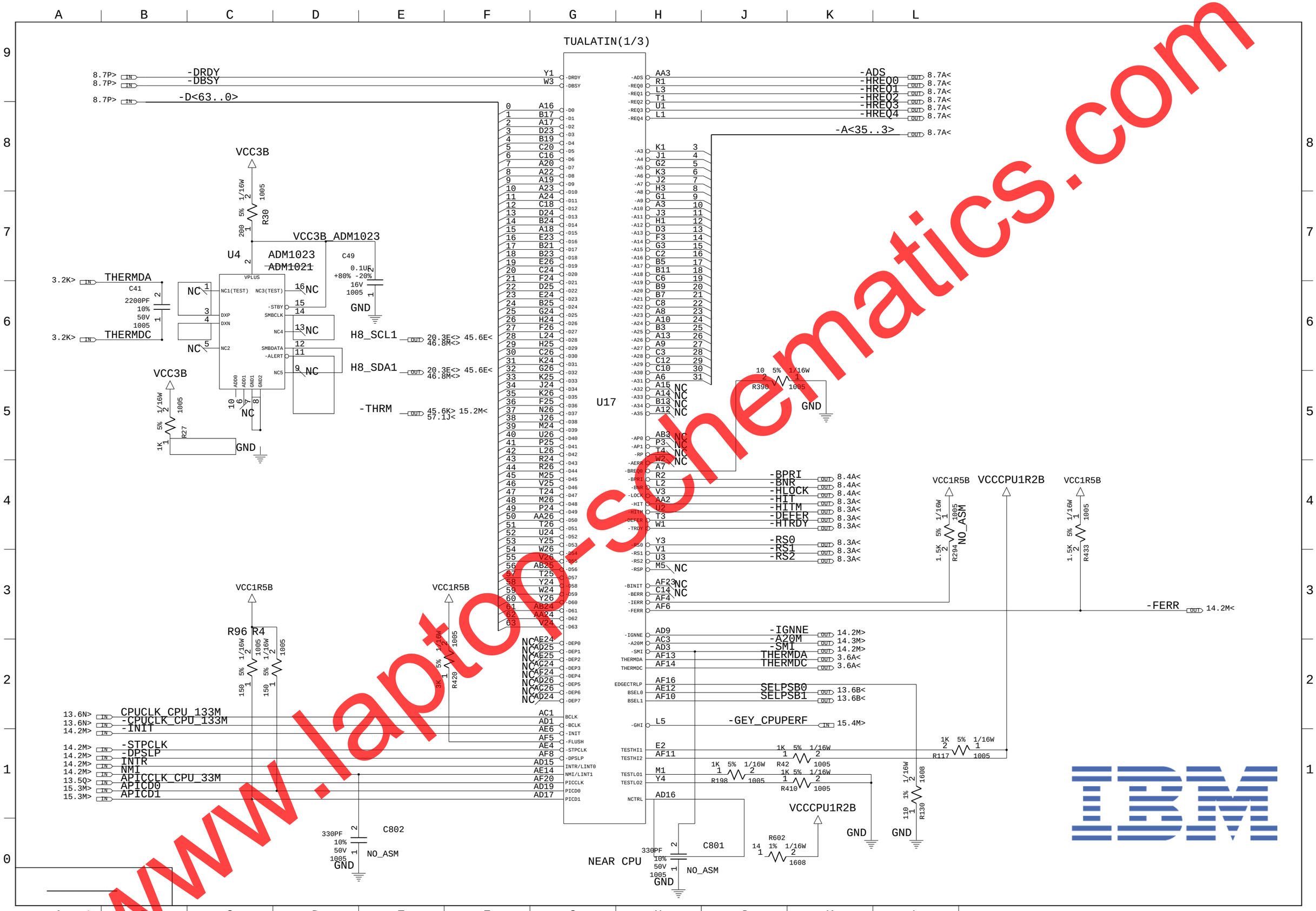

www.laptop-schematics.com

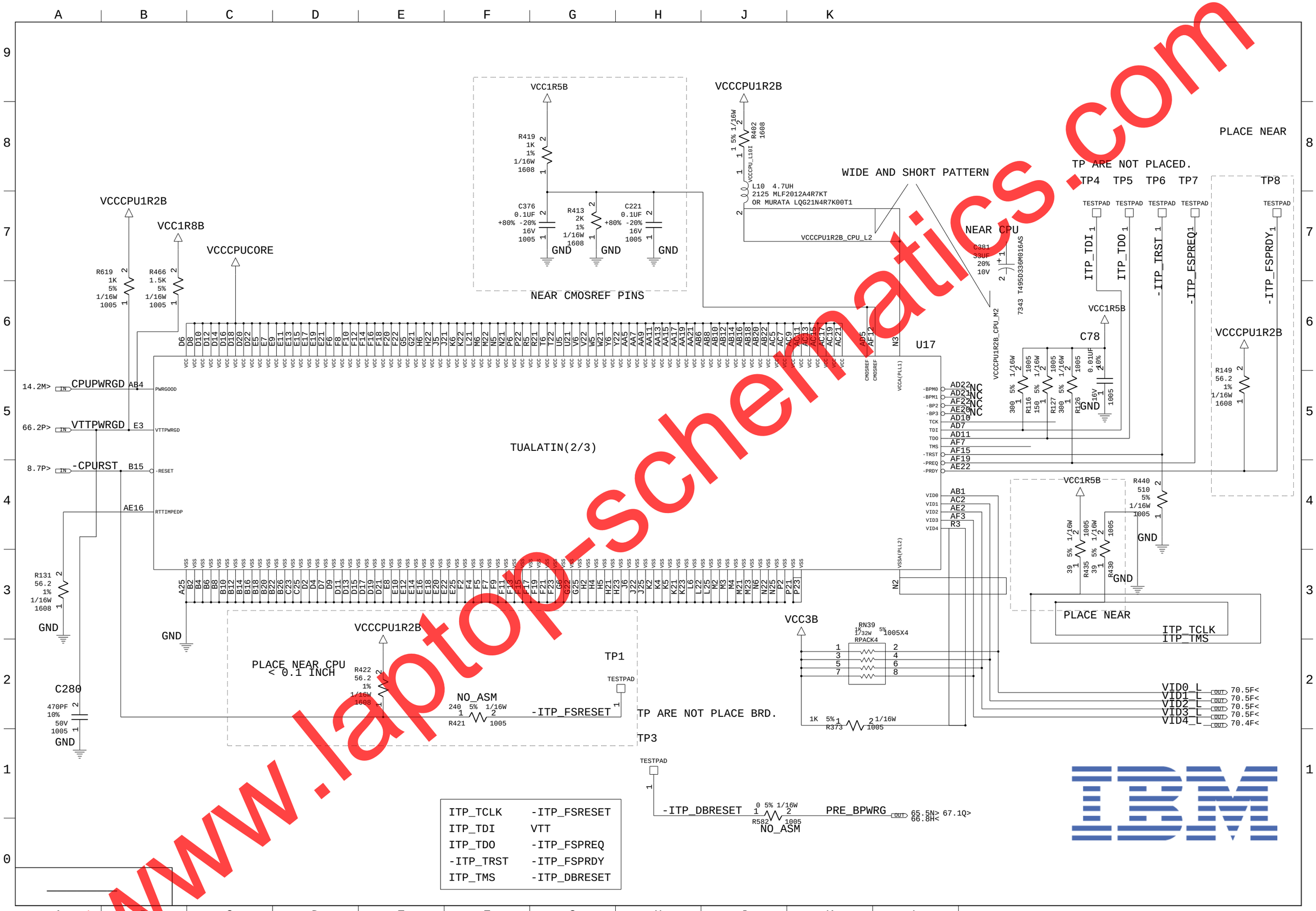

www.laptop-schematics.com

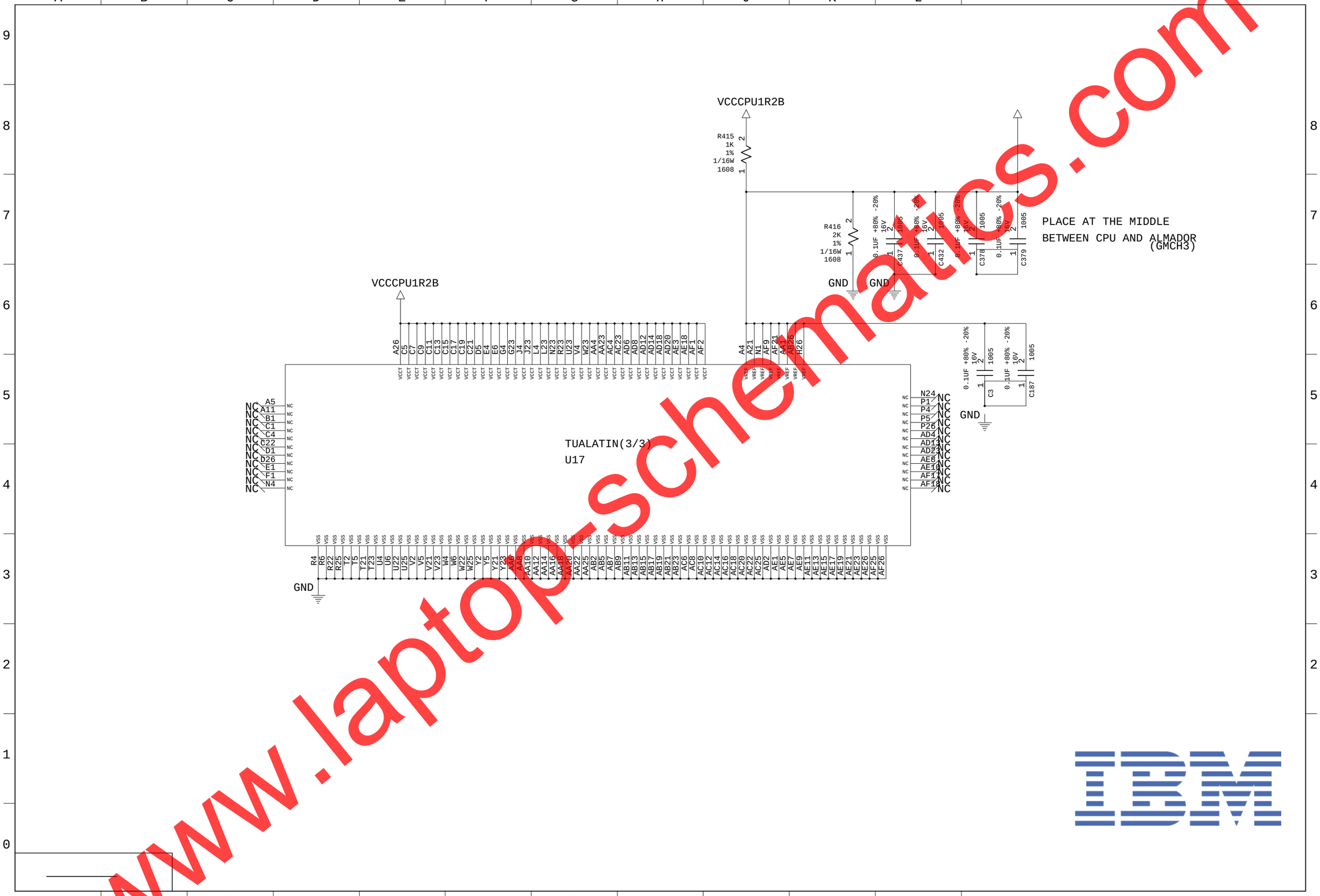

www.laptop-schematics.com

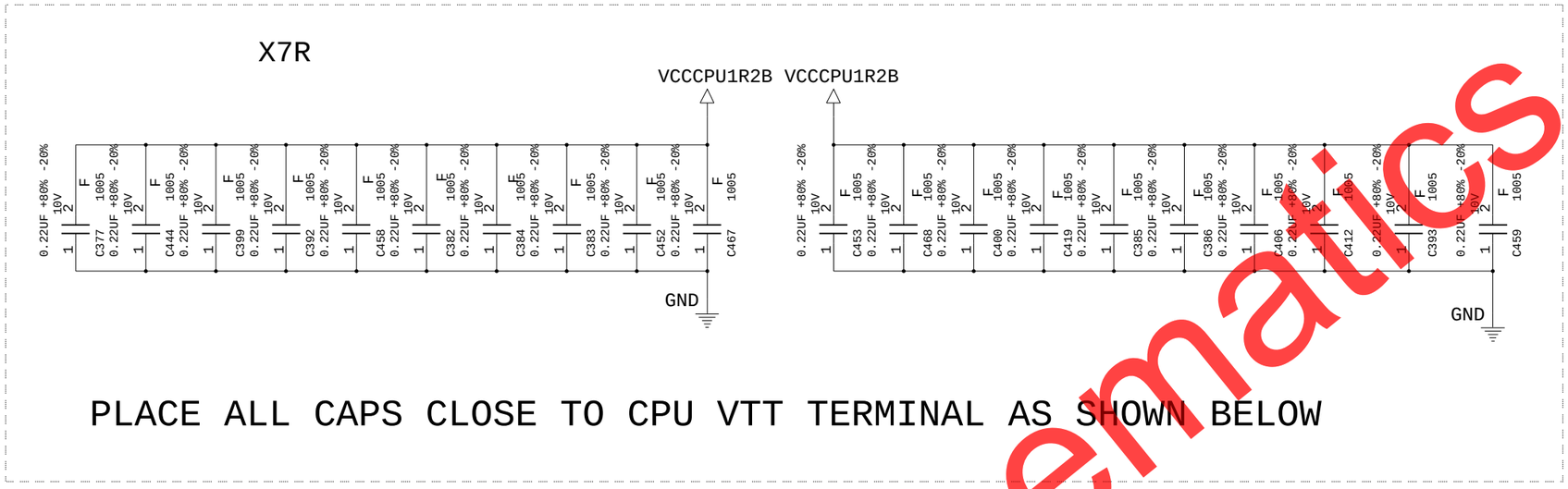

PLACE ALL CAPS CLOSE TO CPU VTT TERMINAL AS SHOWN BELOW

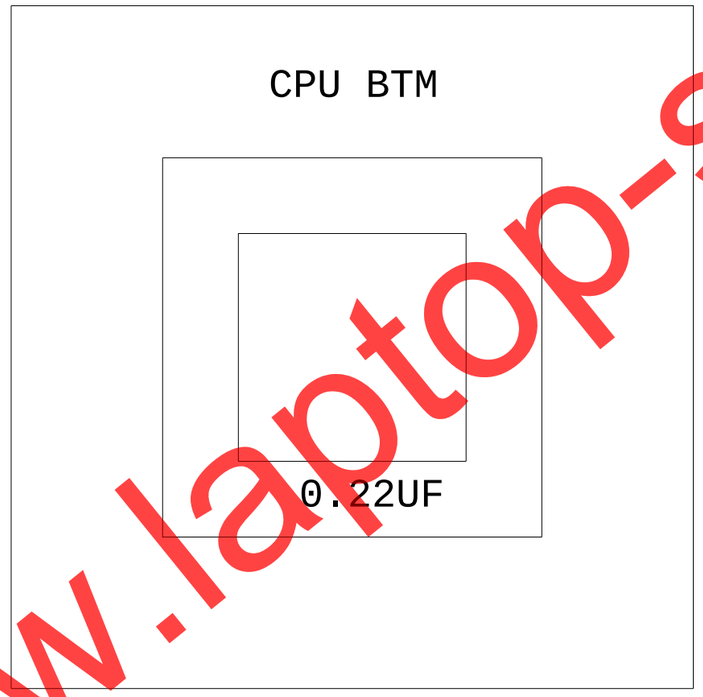

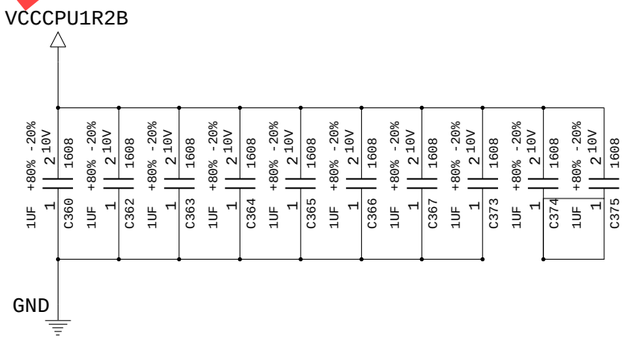

www.laptop-schematics.com

PLACE NEAR CPU

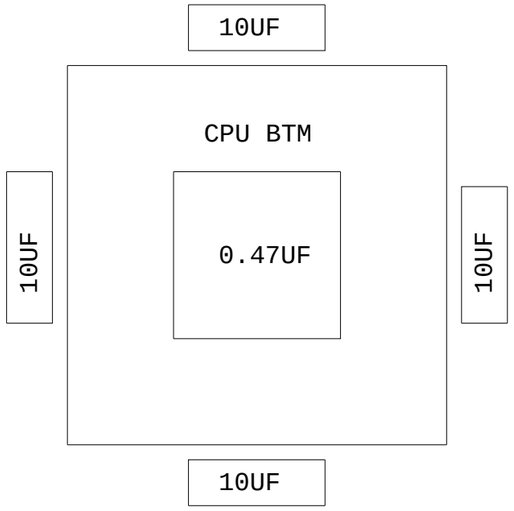

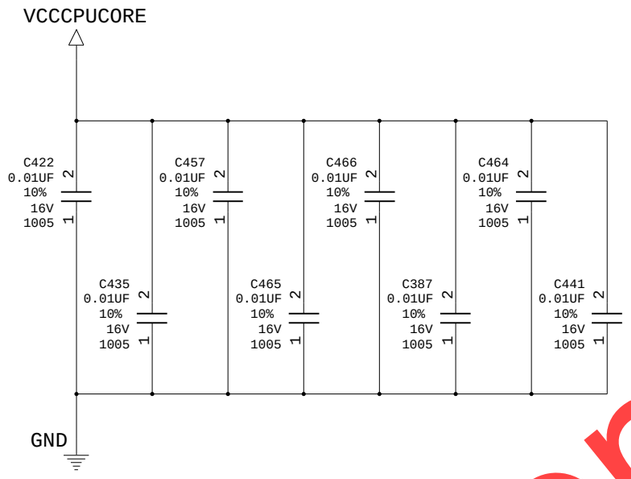

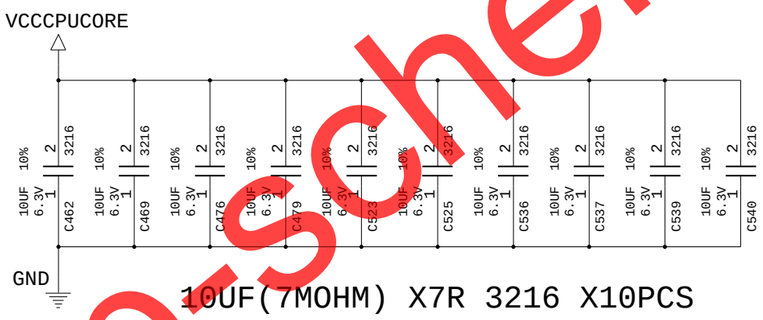

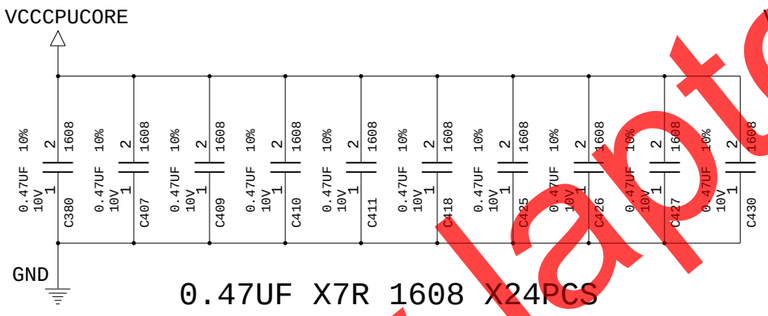

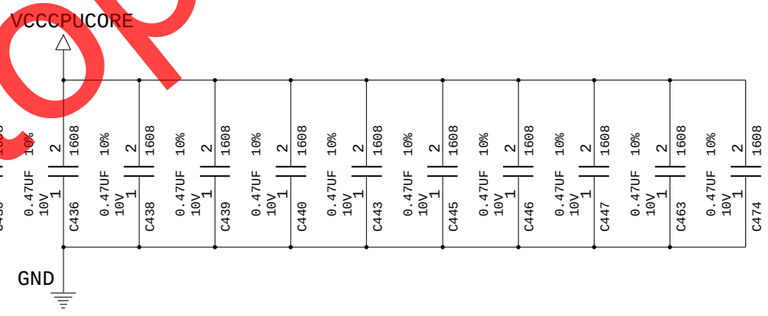

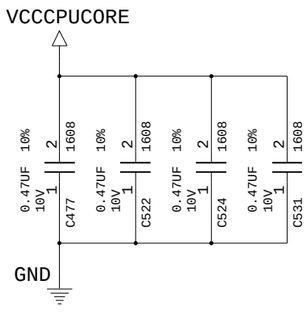

www.laptop-schematics.com

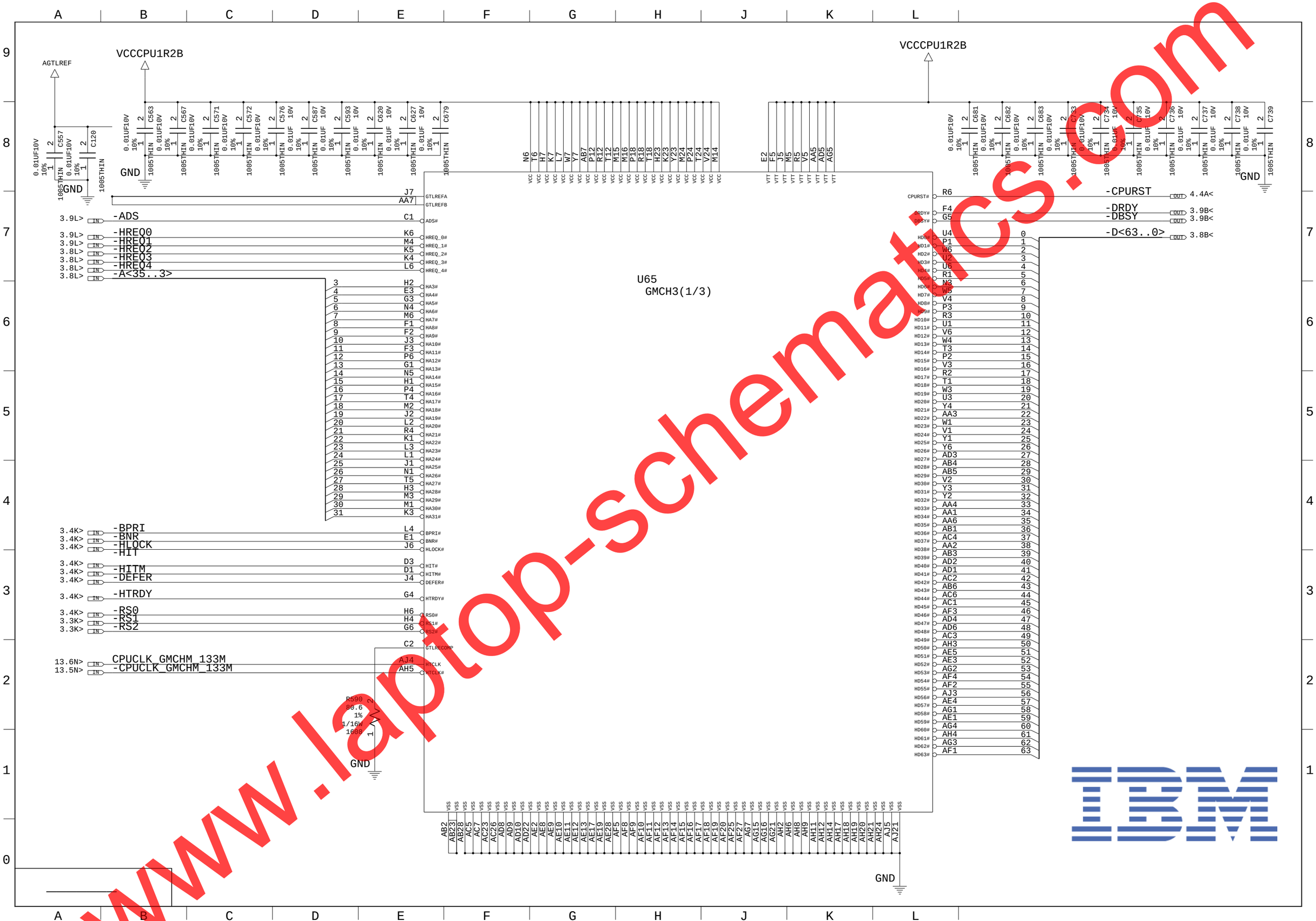

www.laptop-schematics.com

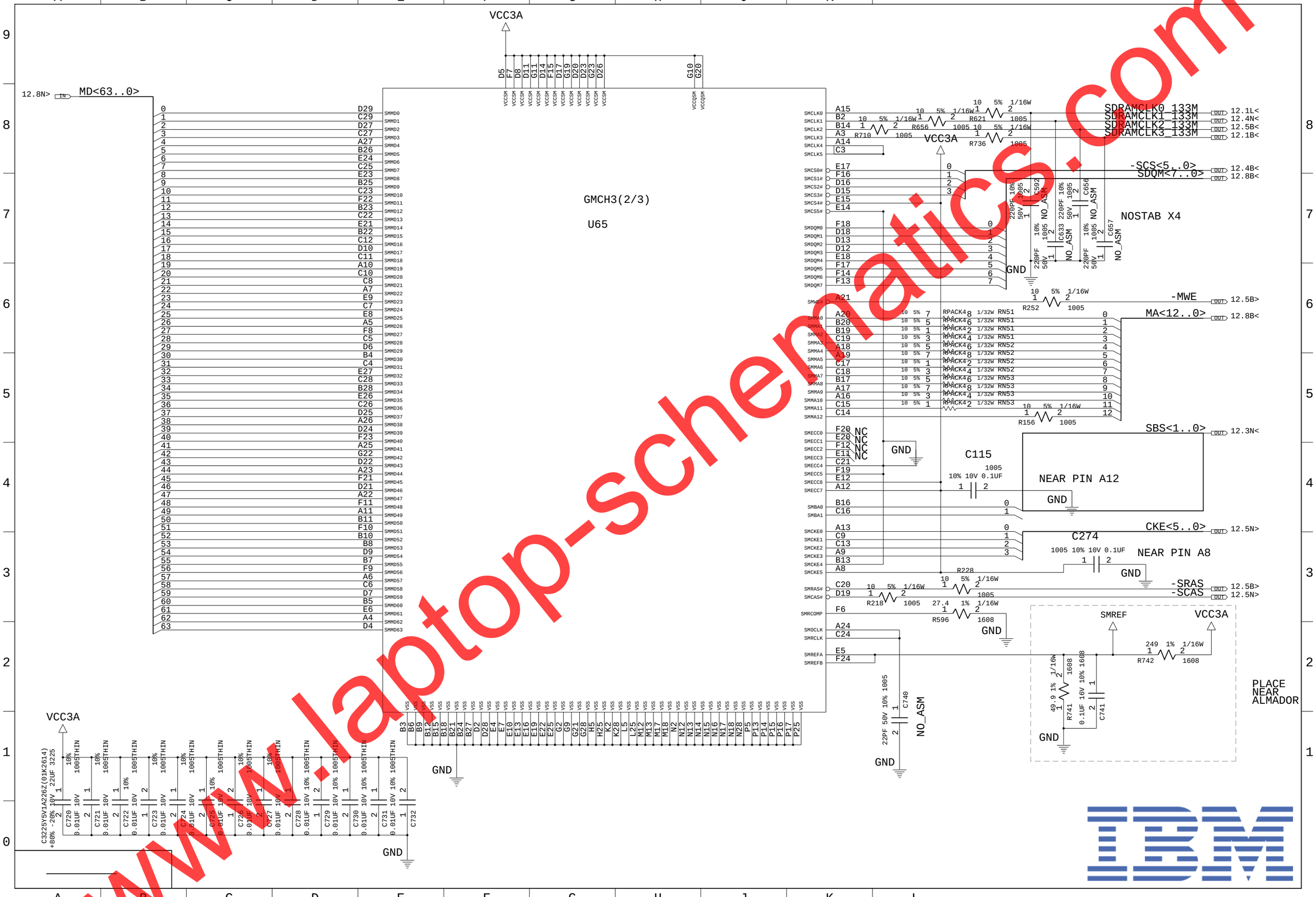

www.laptop-schematics.com

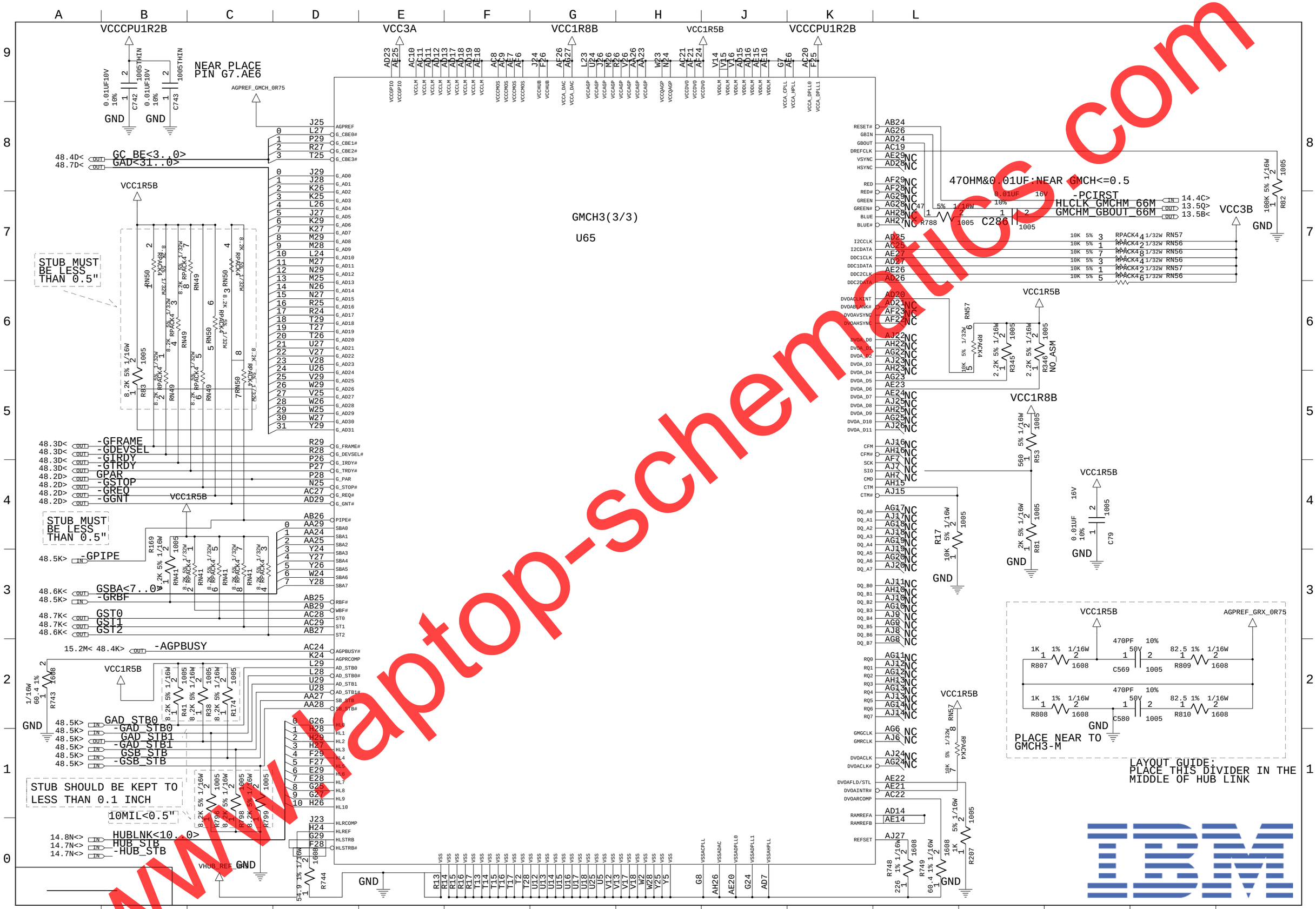

www.laptop-schematics.com

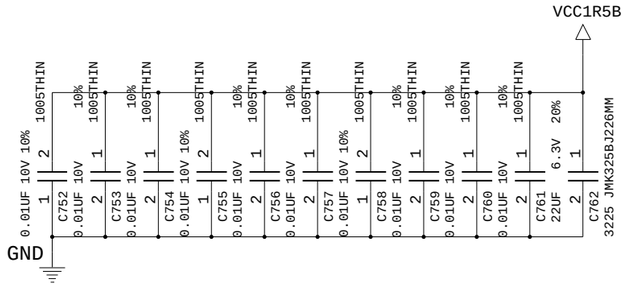

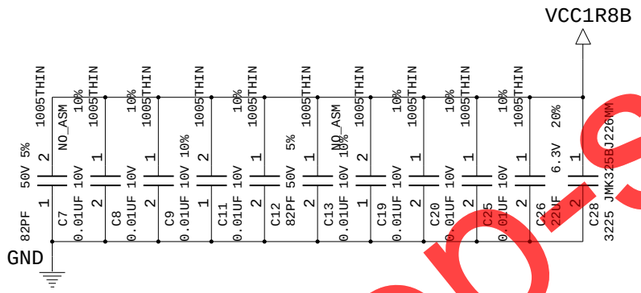

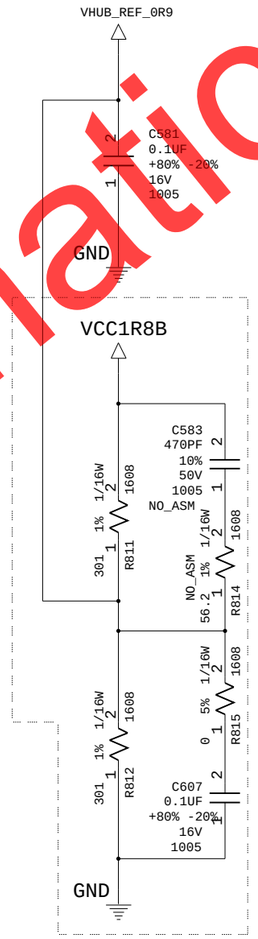

www.laptopschematics.com

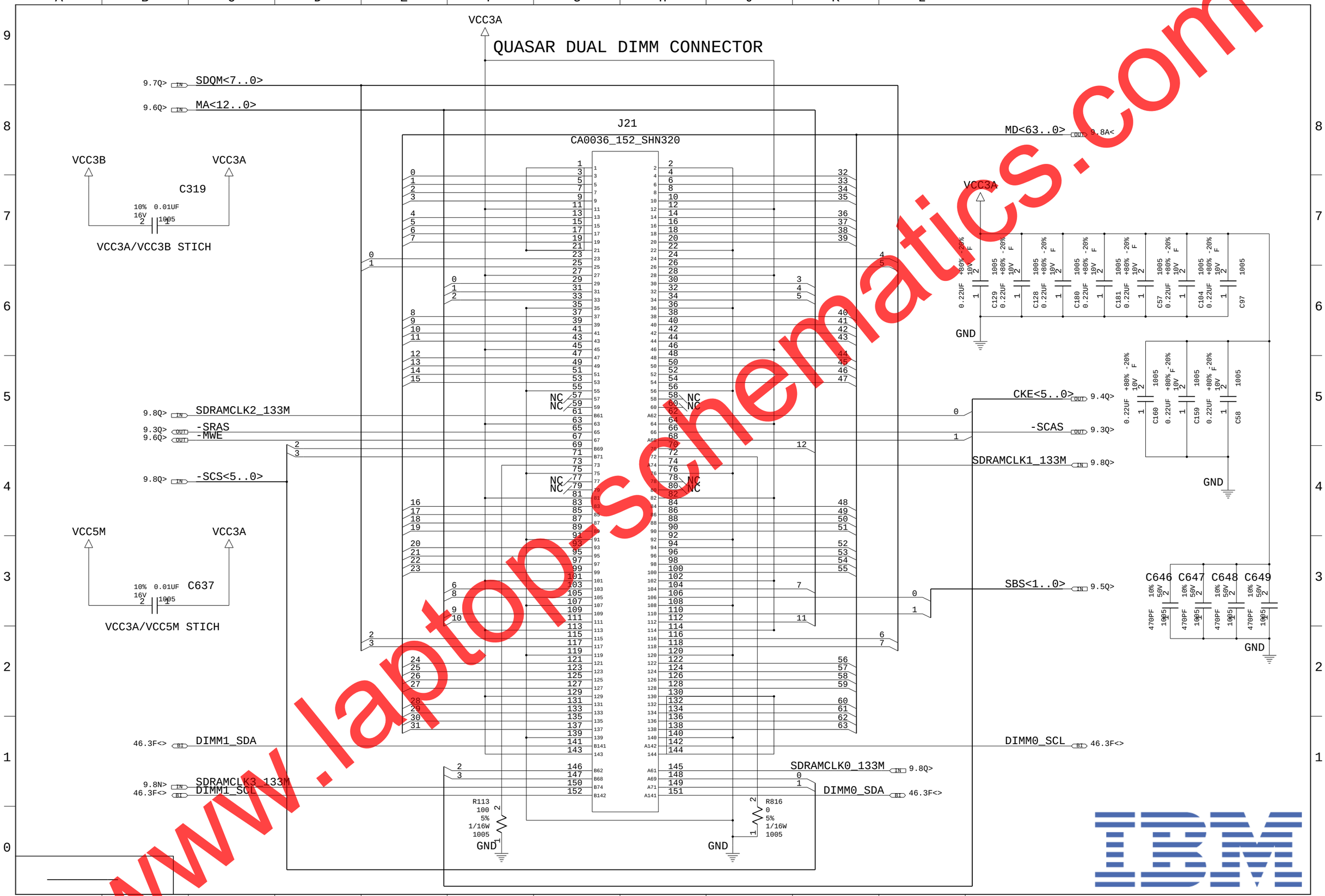

www.laptopschematics.com

SEL2	SEL1	SEL0	CPU
1	0	0	66M
1	0	1	100M
1	1	0	200M
1	1	1	133M

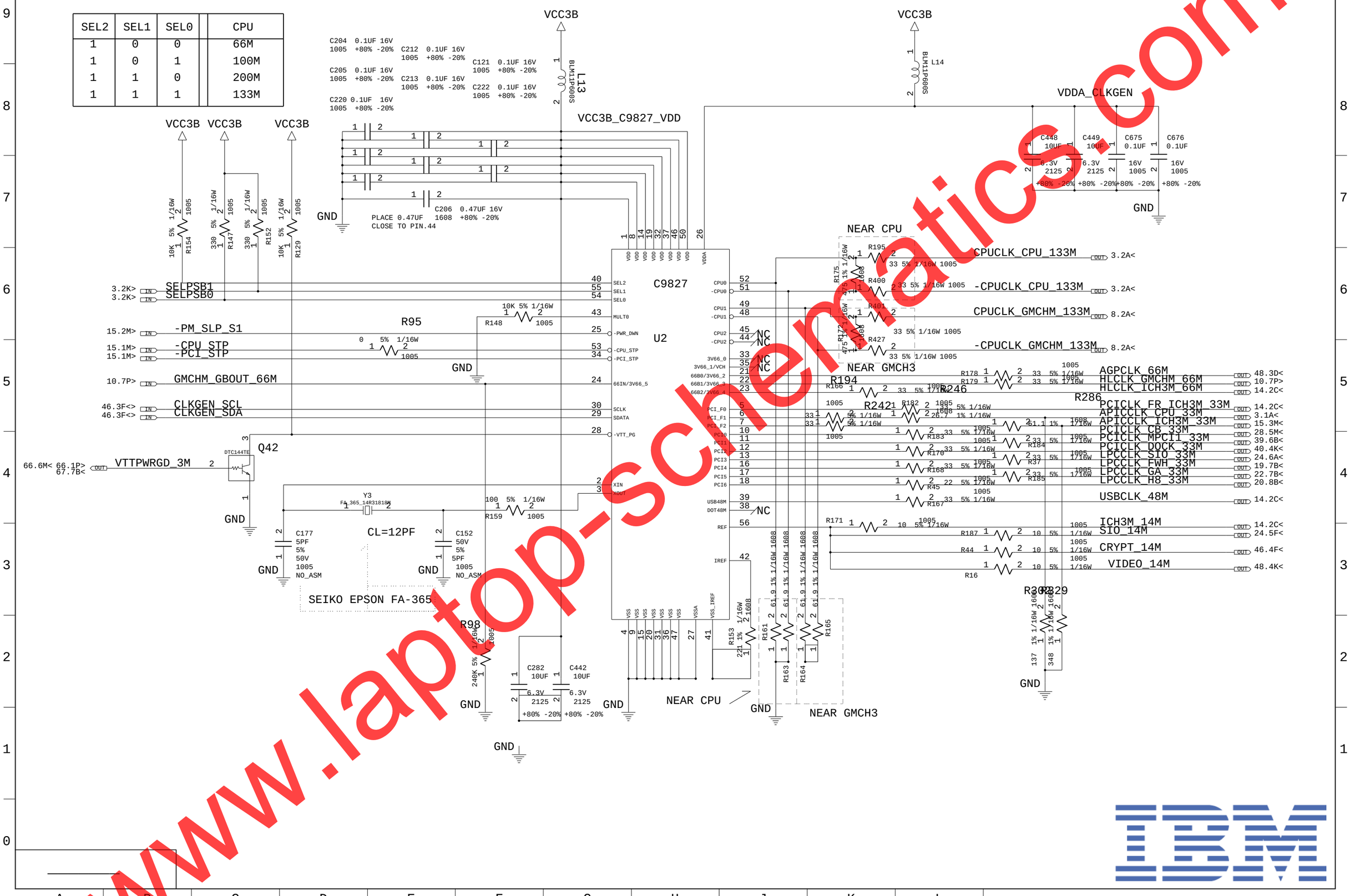

www.laptop-schematics.com

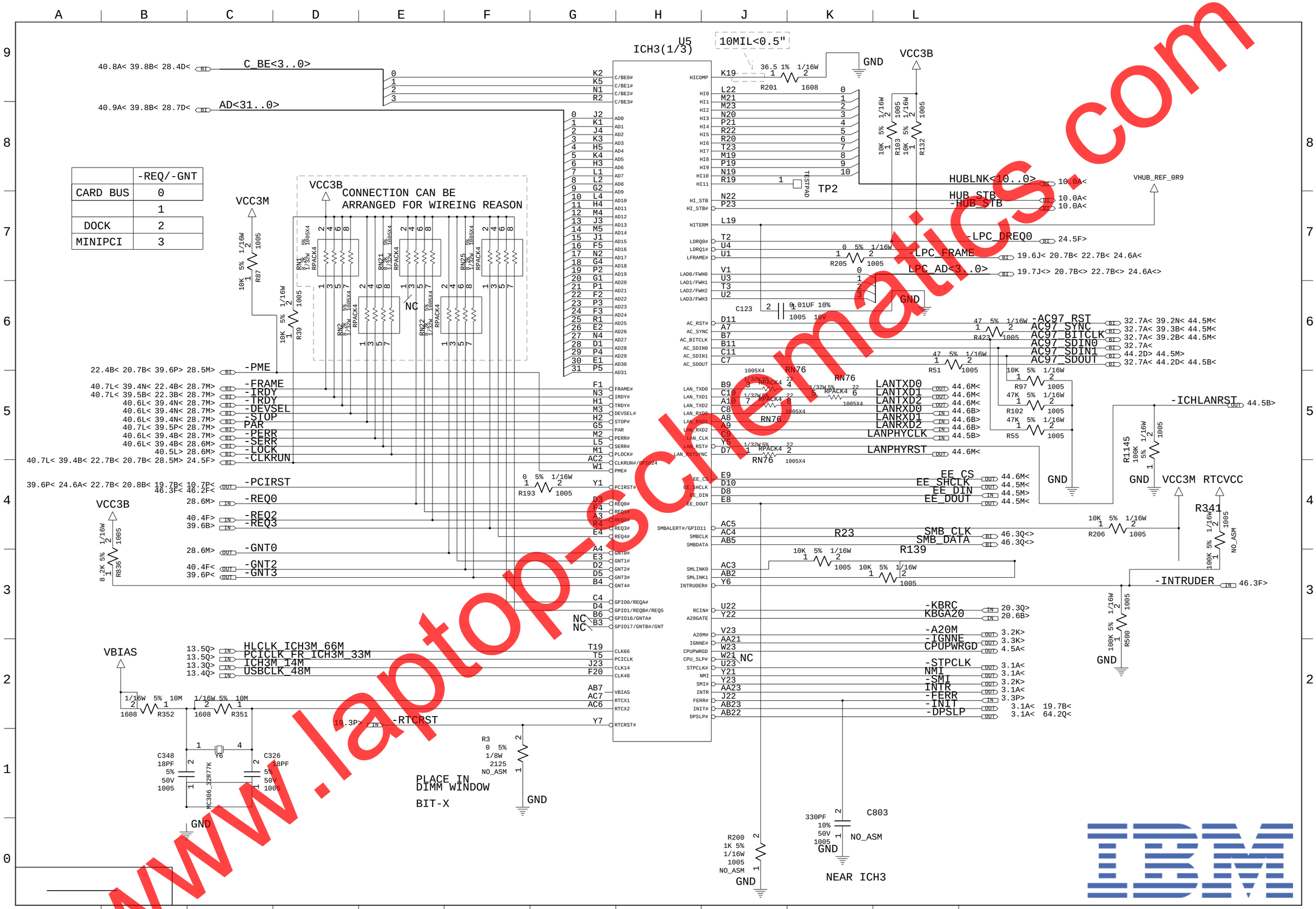

	-REQ/-GNT
CARD BUS	0
	1
DOCK	2
MINIPCI	3

www.laptop-schematics.com

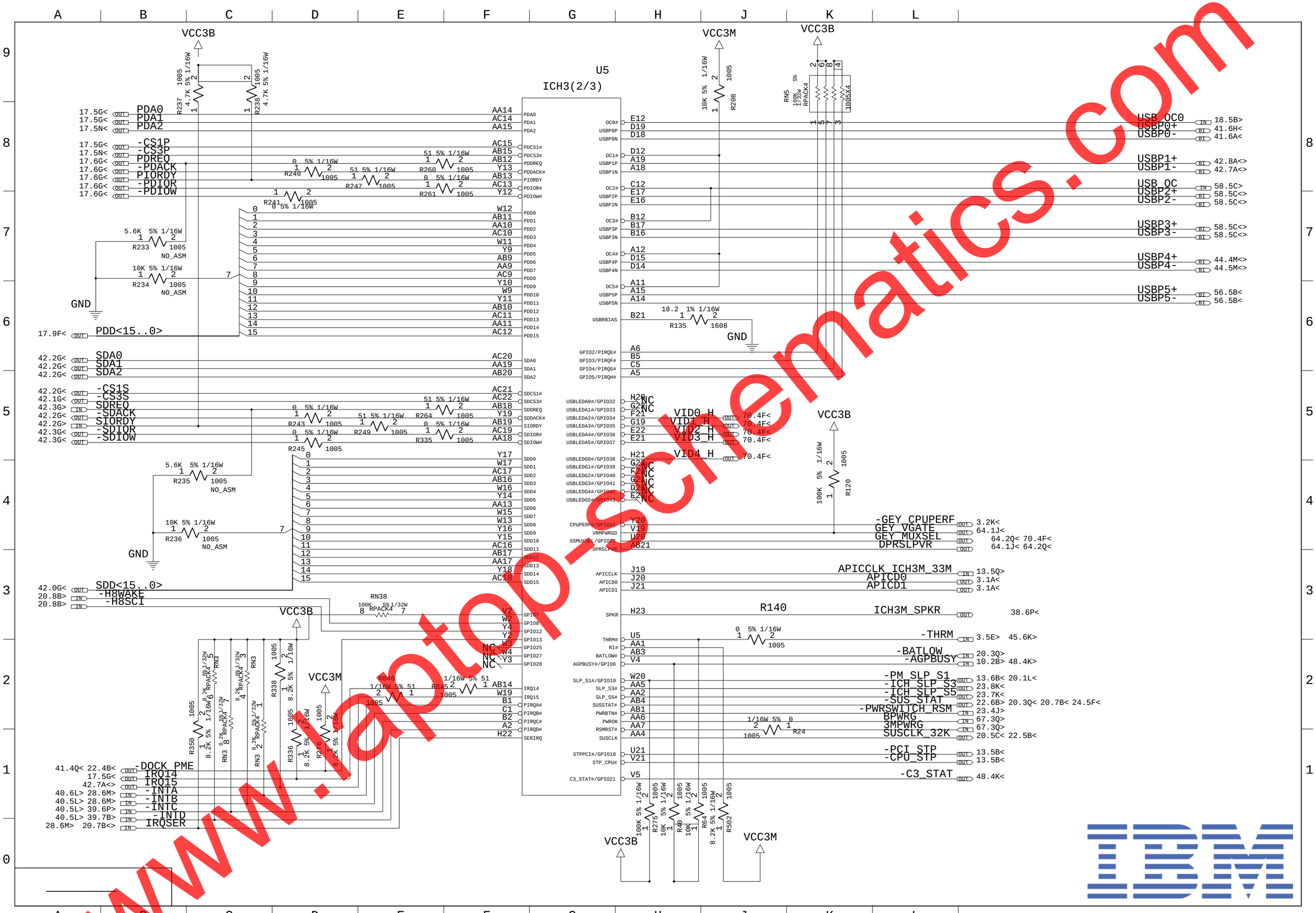

www.laptop-schematics.com

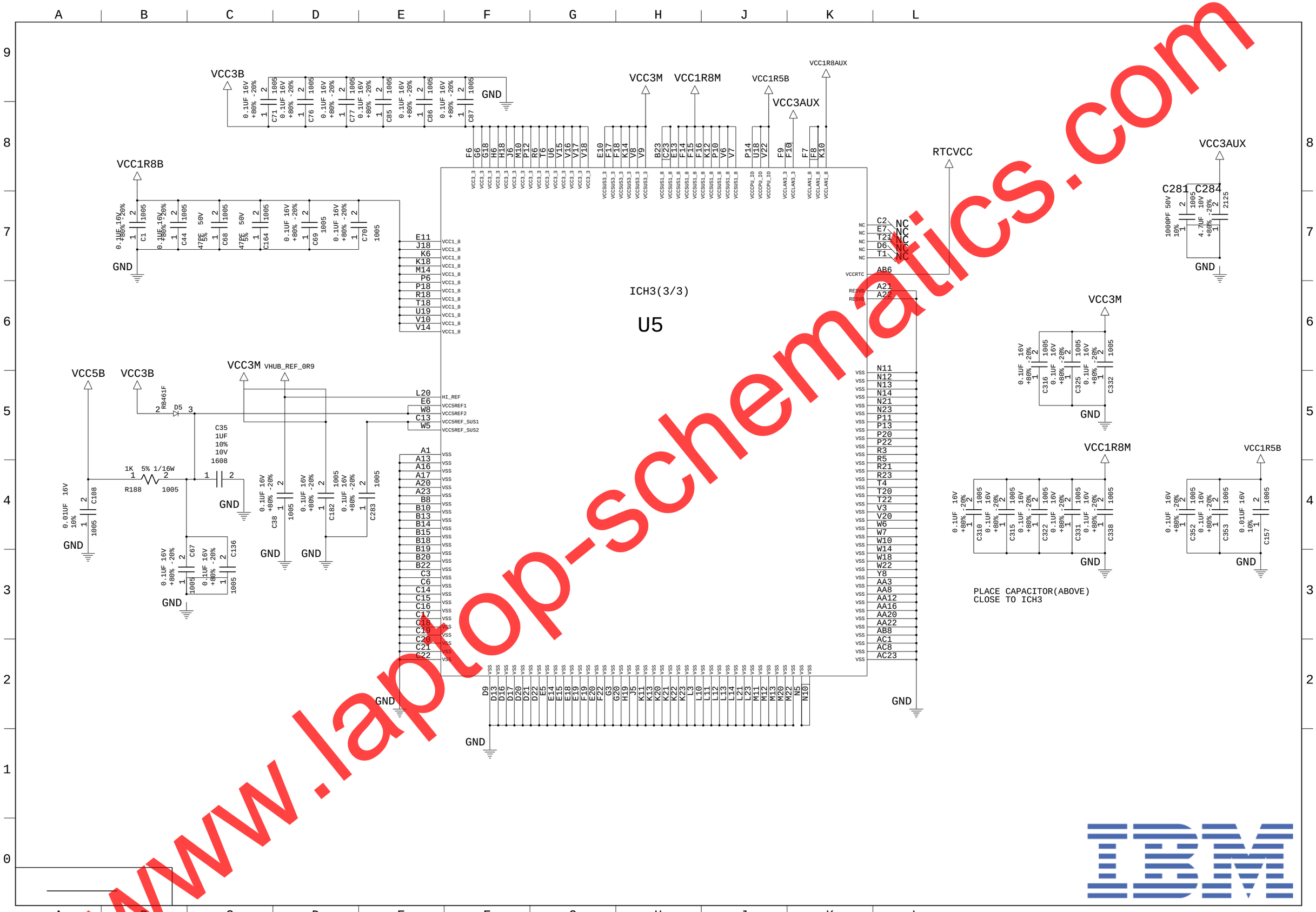

www.laptop-schematics.com

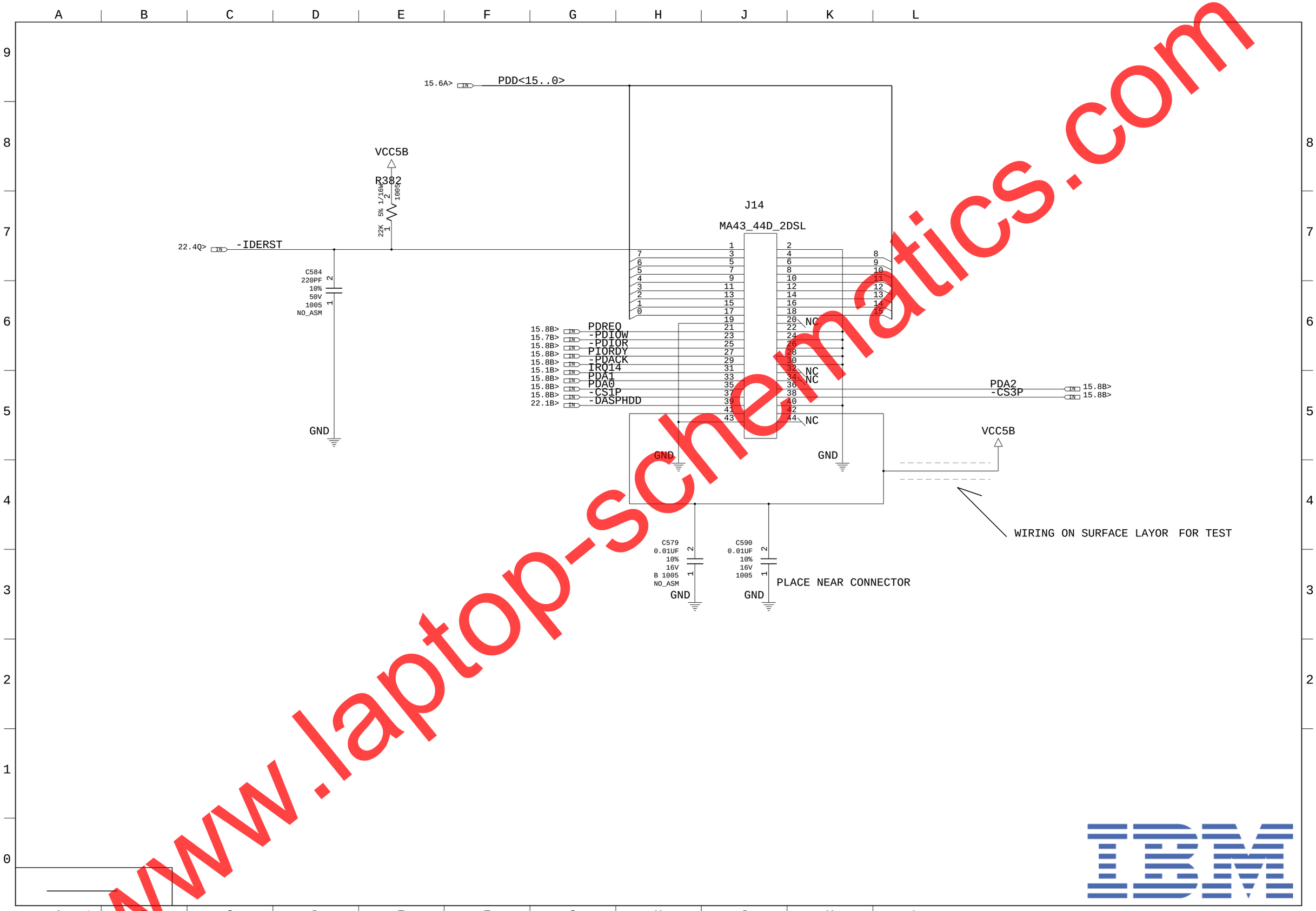

www.laptop-schematics.com

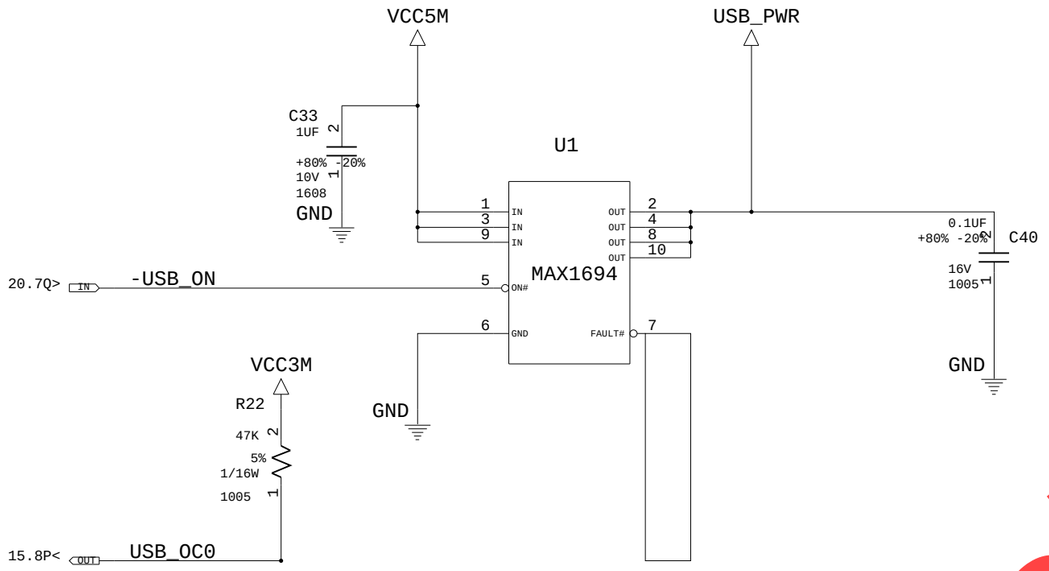

www.laptop-schematics.com

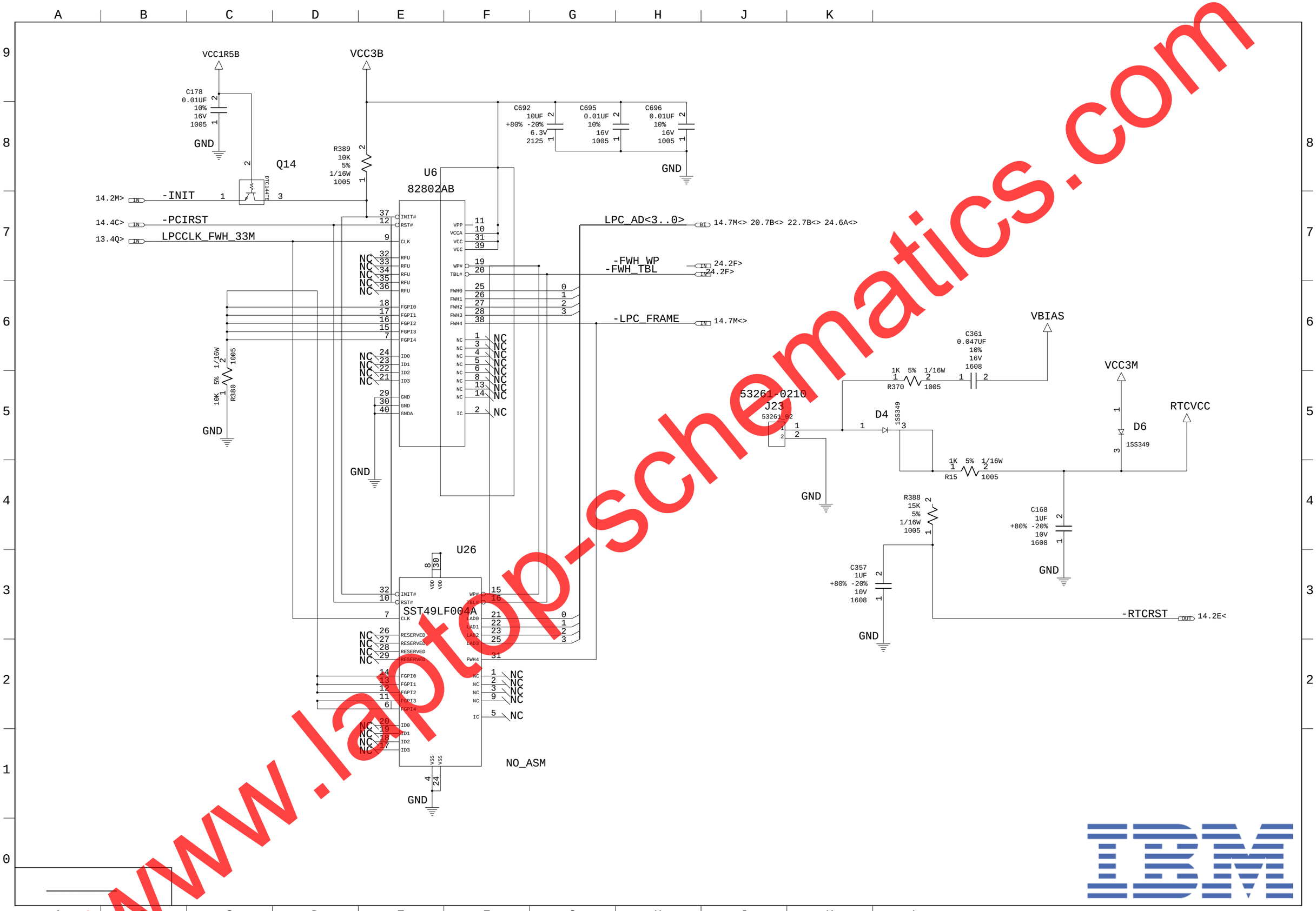

www.laptop-schematics.com

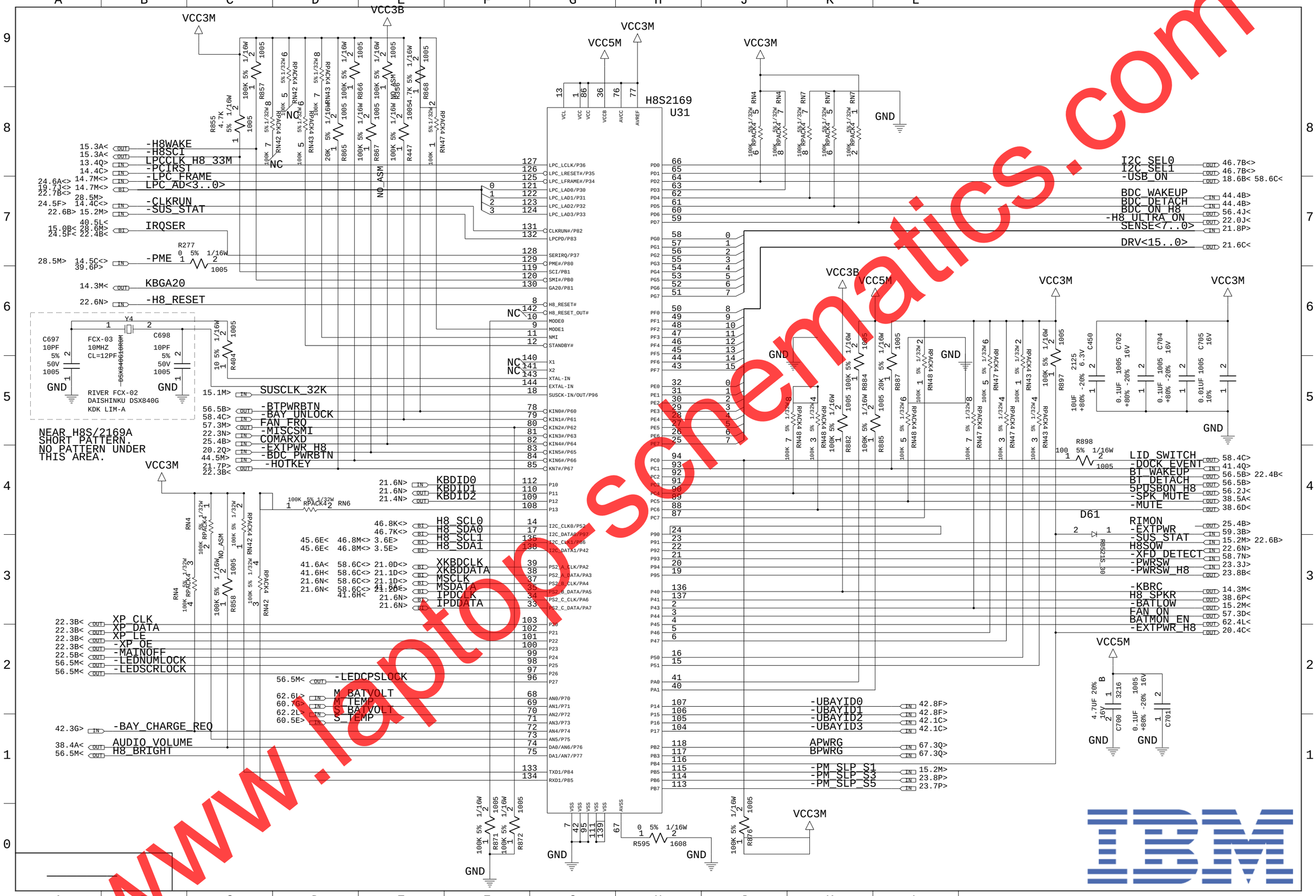

www.laptopschematics.com

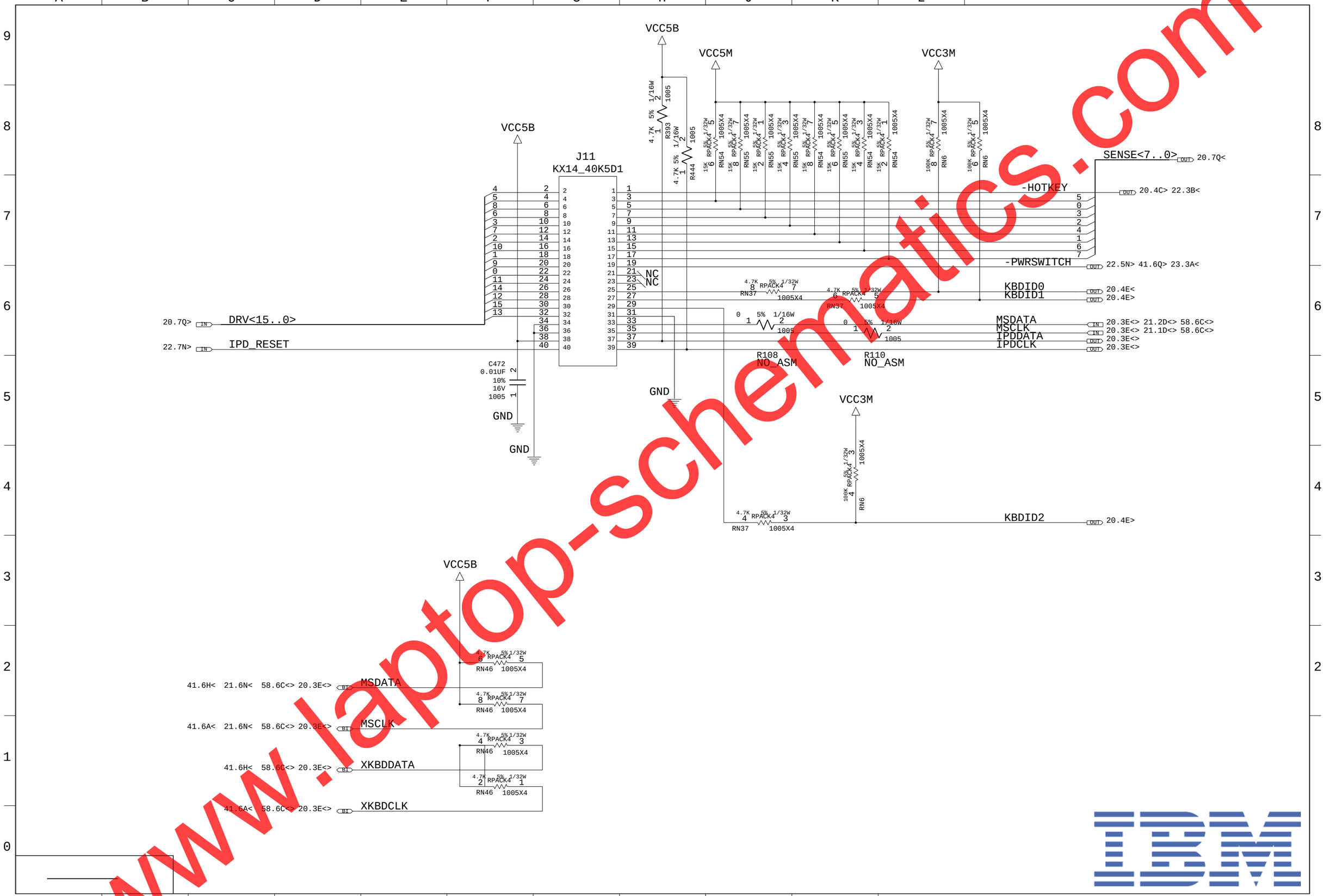

www.laptop-schematics.com

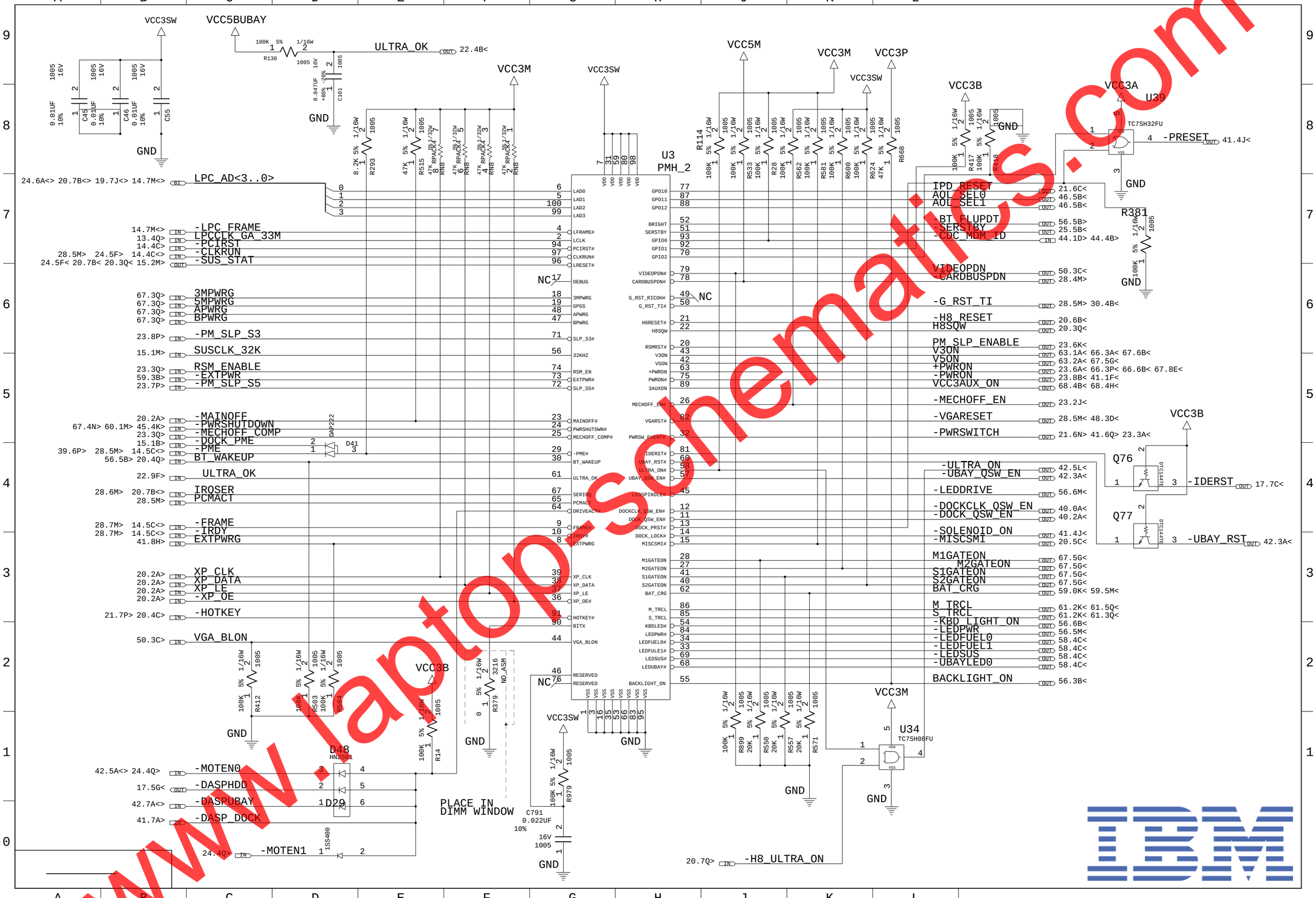

www.laptopschematics.com

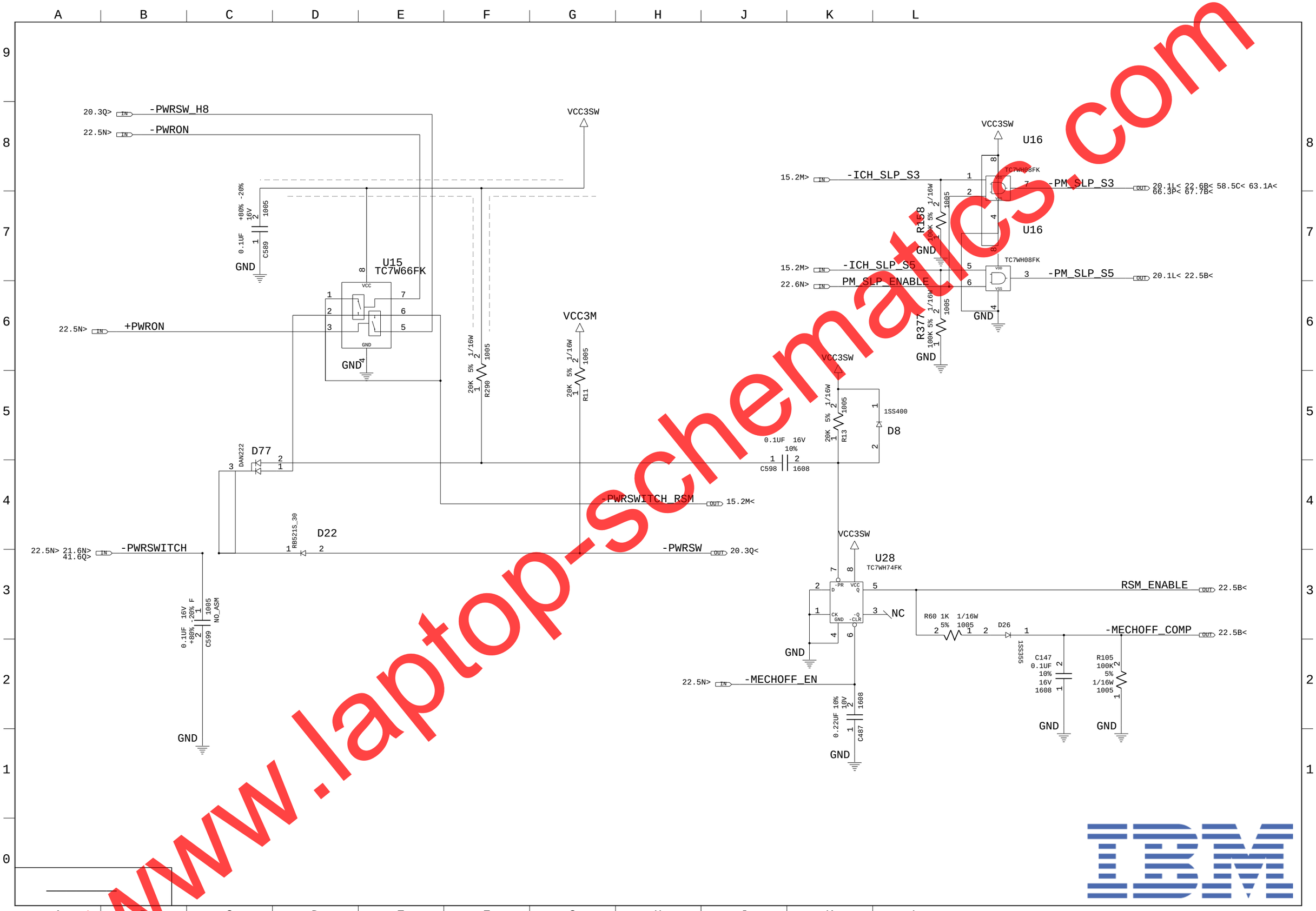

www.laptop-schematics.com

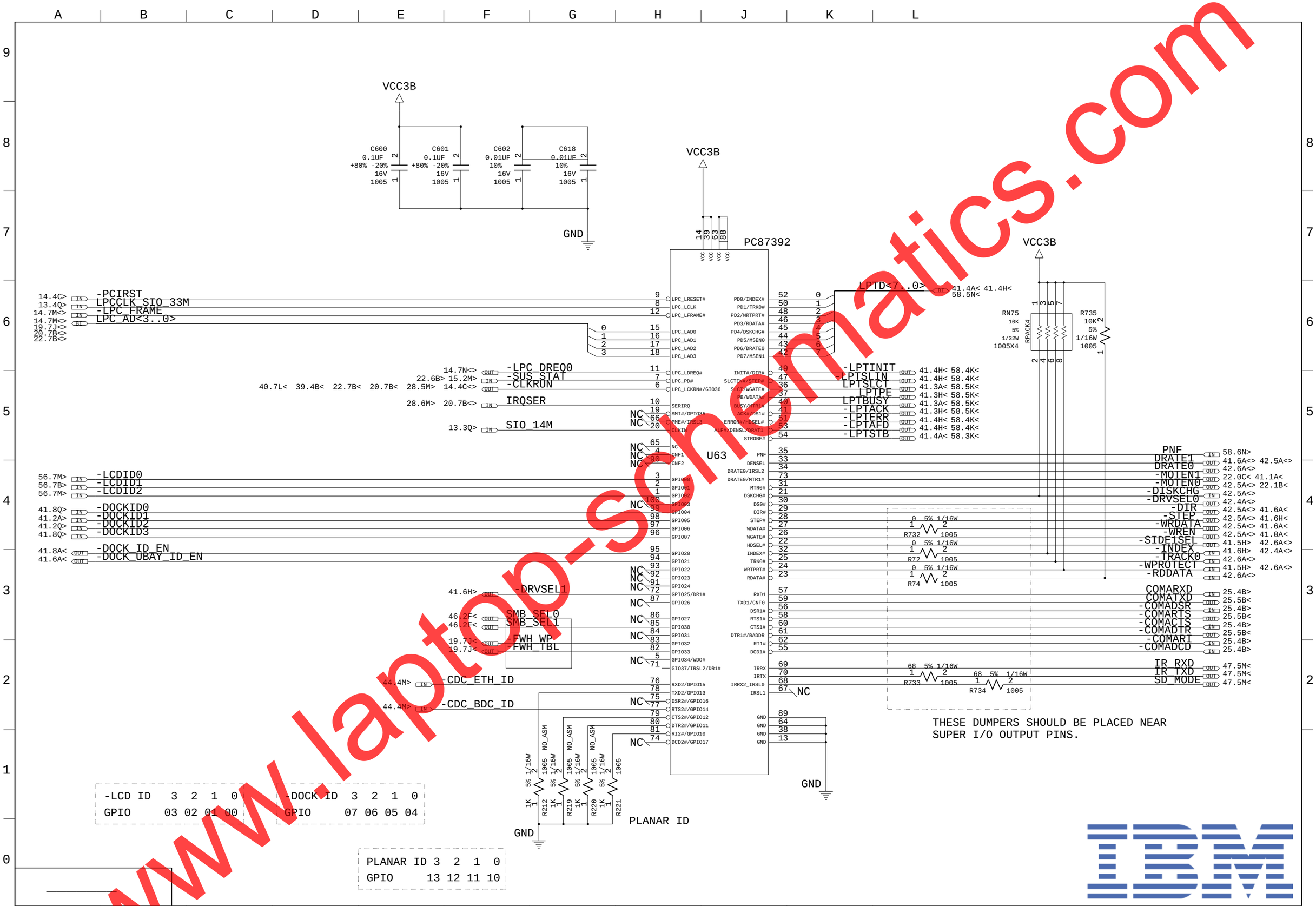

www.laptop-schematics.com

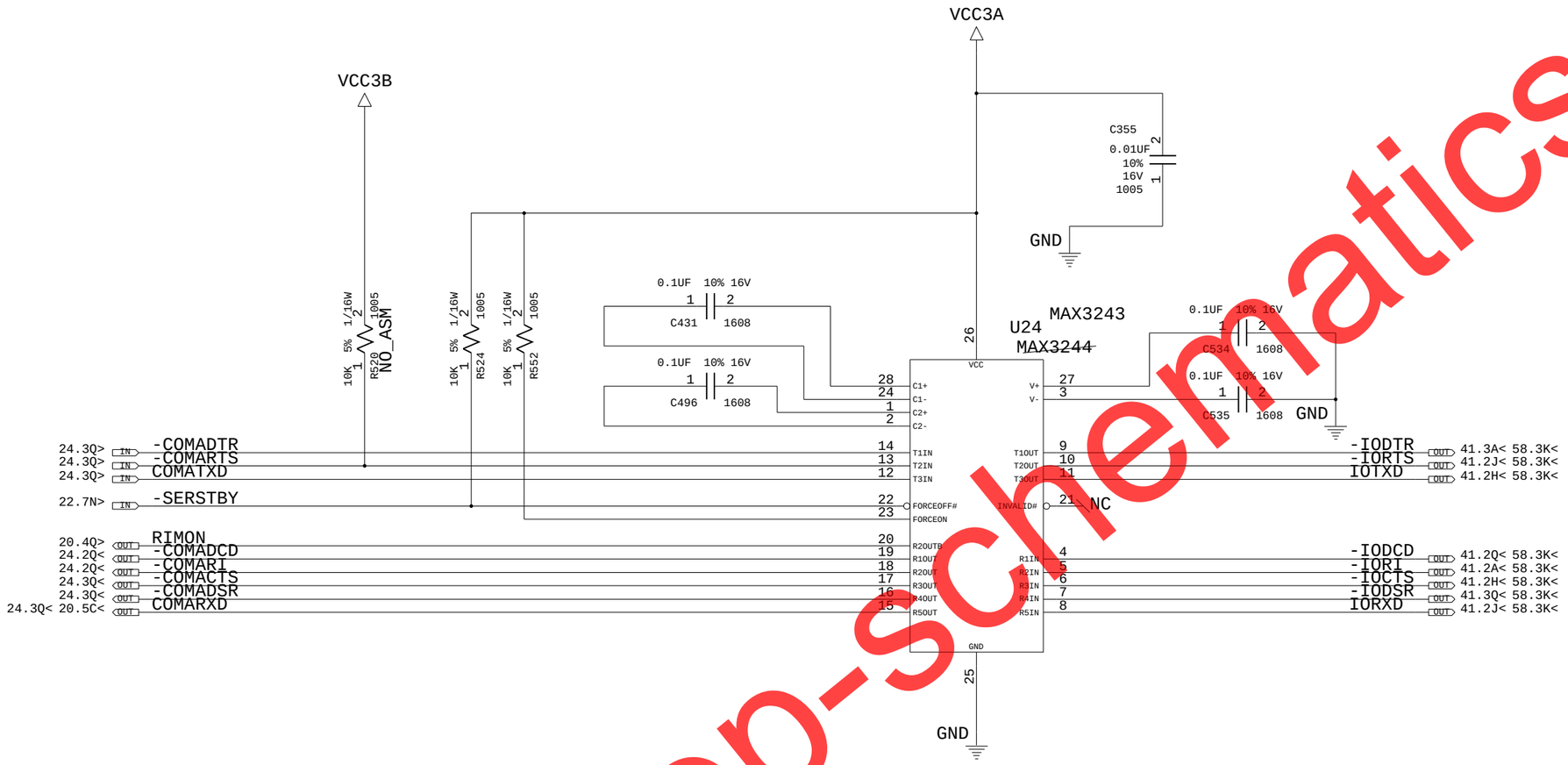

R1IN/R2IN/R3IN/R5IN HAVE INTERNAL PULLDOWN(5K OHM).
DO NOT WIRE SIGNALS UNDER PINS (1/2/3/24/25/26/27/28)
CHARGE PUMP CAPACITOR SHOULD BE PLACED NEAR PINS(1/2/3/24/27/28)
ADD GND SHILED UNDER CHARGE PUMP CIRCUIT TO
PROTECT POWER LINE NOISE
CAPACITORS FOR CHARGE PUMP SHOULD BE USED TYPE B AND LOW ESR TYPE.

	NOMAL MODE	POWER DOWN MODE	AUTO POWER DOWN MODE
FORCEON	HIGH	DO NOT CARE	LOW
FOCEOFF	HIGH	LOW	HIGH

www.laptop-schematics.com

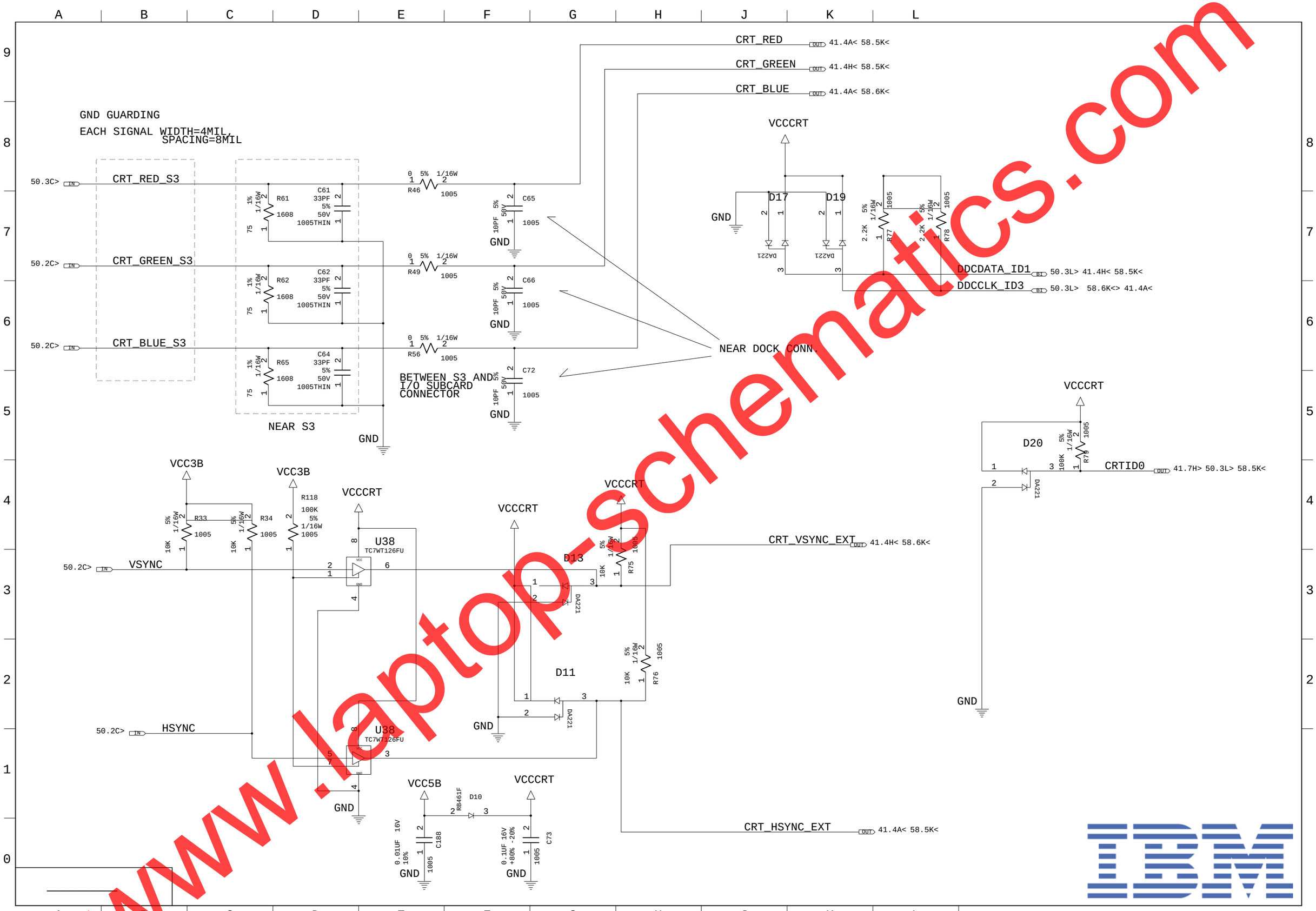

www.laptop-schematics.com

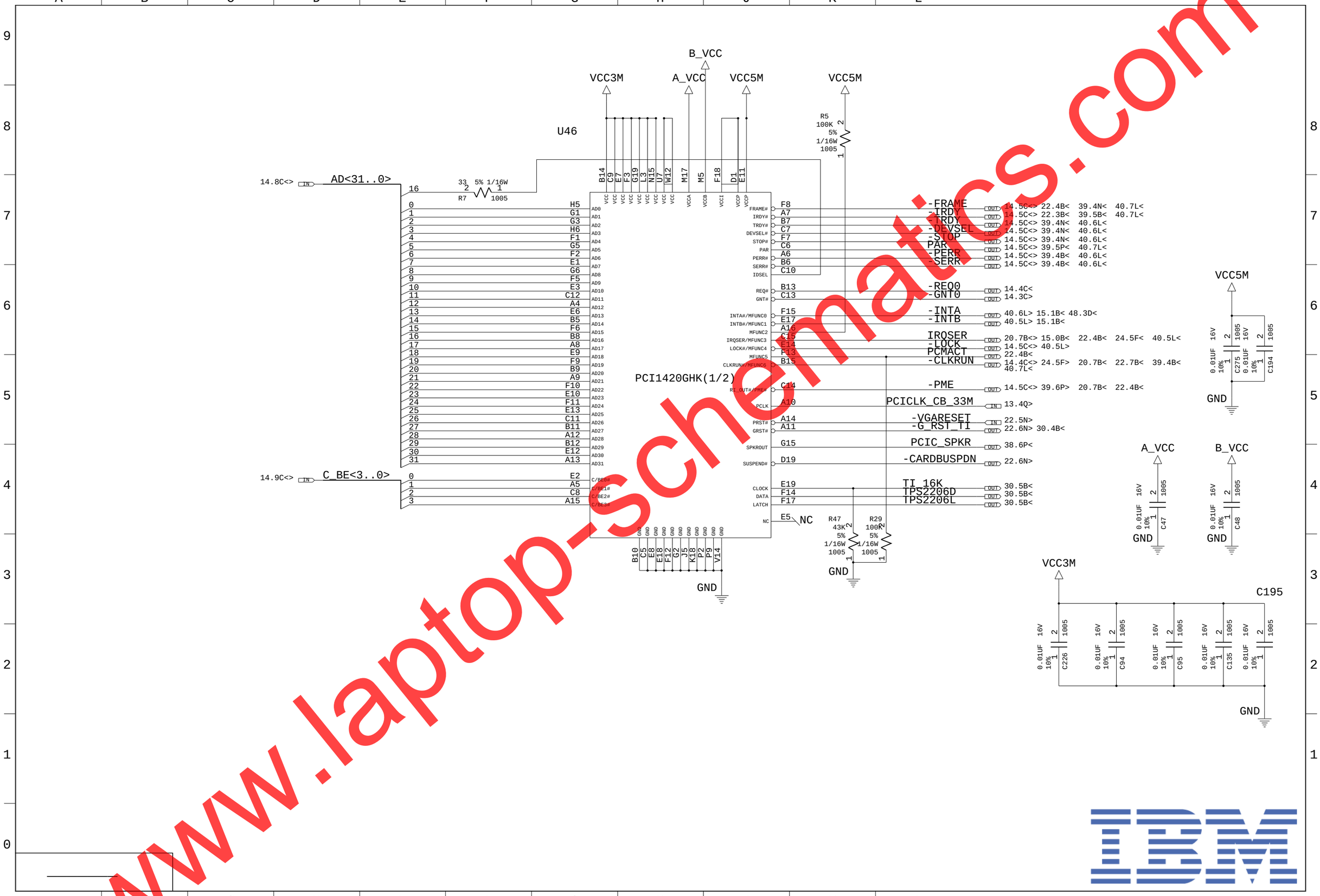

www.laptop-schematics.com

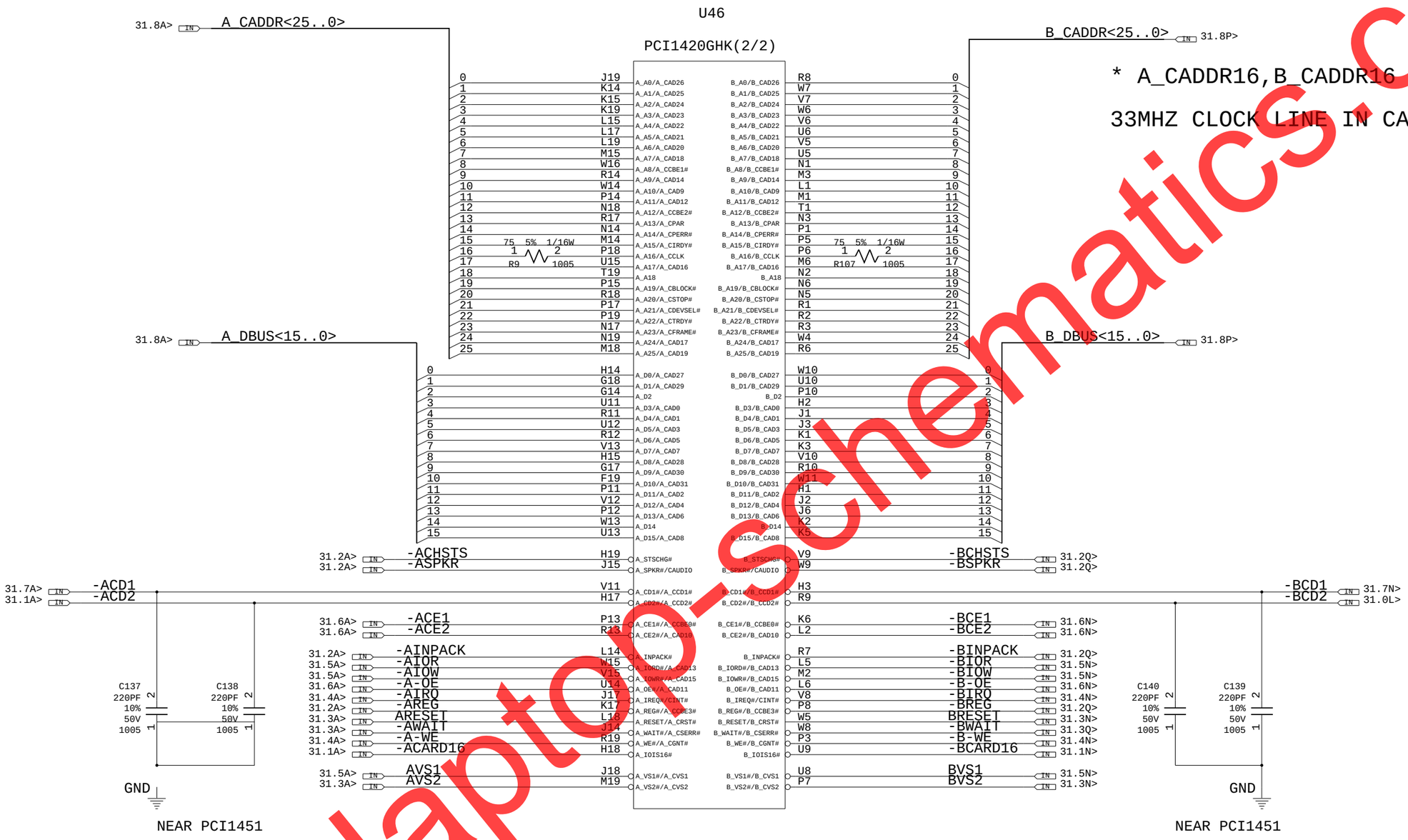

* A_CADDR16,B_CADDR16

33MHZ CLOCK LINE IN CARDBUS MODE

www.laptop-schematics.com

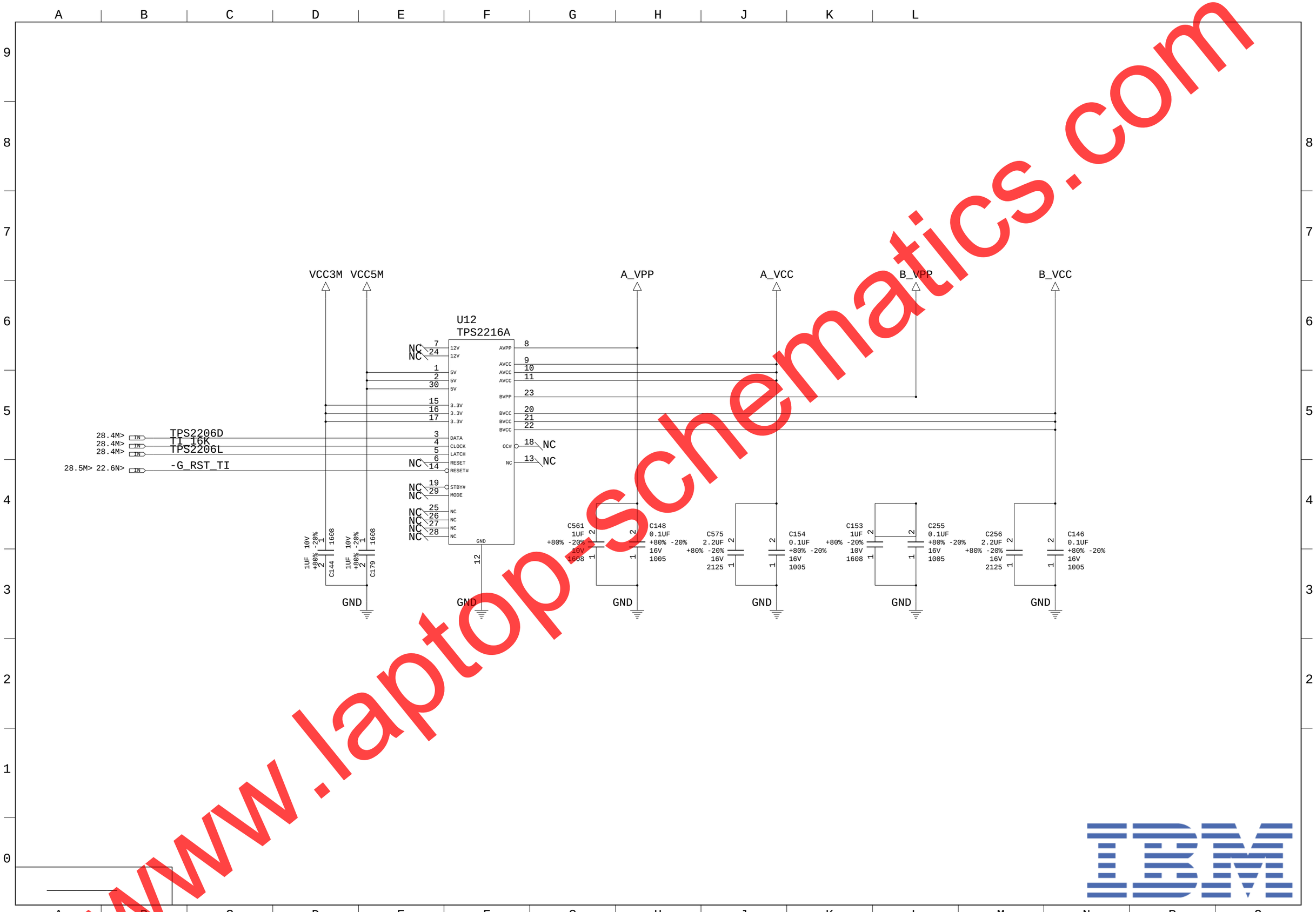

www.laptop-schematics.com

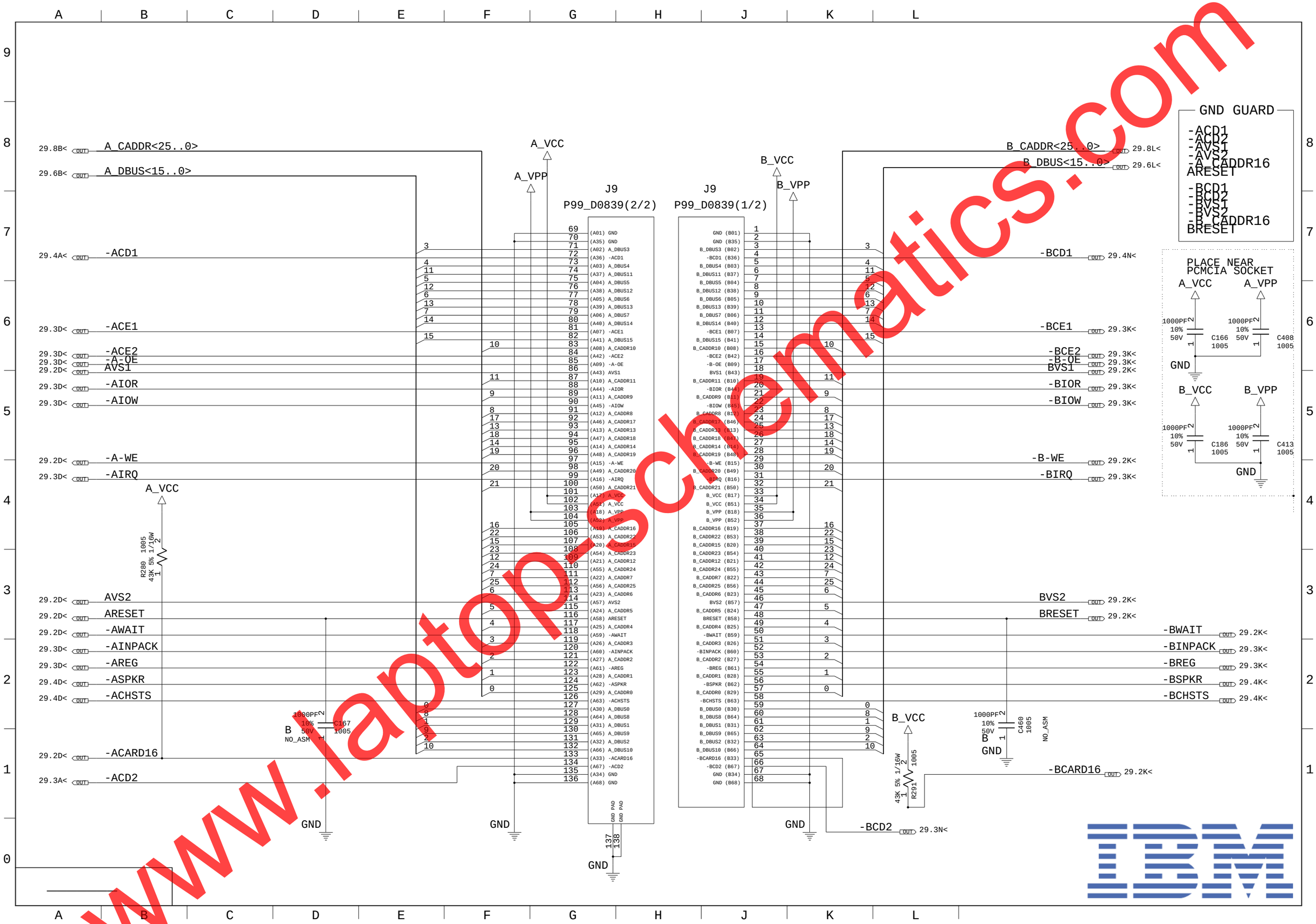

www.laptopschematics.com

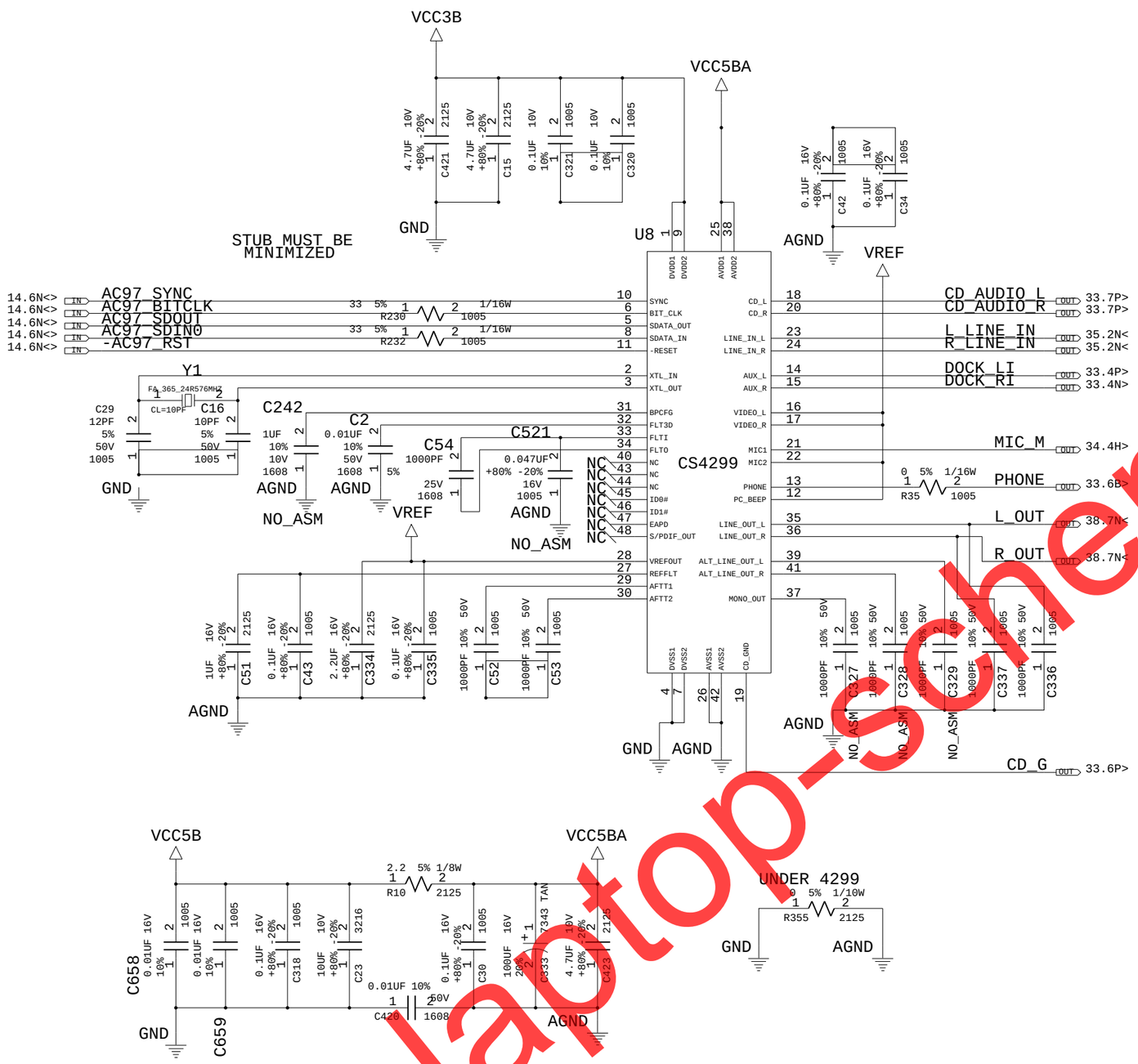

LOGIC VALUE IS SET FOR CS4299

	AD1881A	CS4299
C2	1UF,10%,10V,1608	0.01UF,10%,1608,50V
C51	4.7UF,10V,2125	1UF,2125, 16V
C52,C53	270PF,50V,10%,1005	1000PF,50V,10%,1005
C54	0.1UF,10V,1608	1000PF,5%,1608,25V
C336,C337	270PF,50V,10%,1005	1000PF,50V,10%,1005
C242	1UF,10%,10V,1608	NO-ASM
C521	0.047UF,16V,1005	NO-ASM

www.laptop-schematics.com

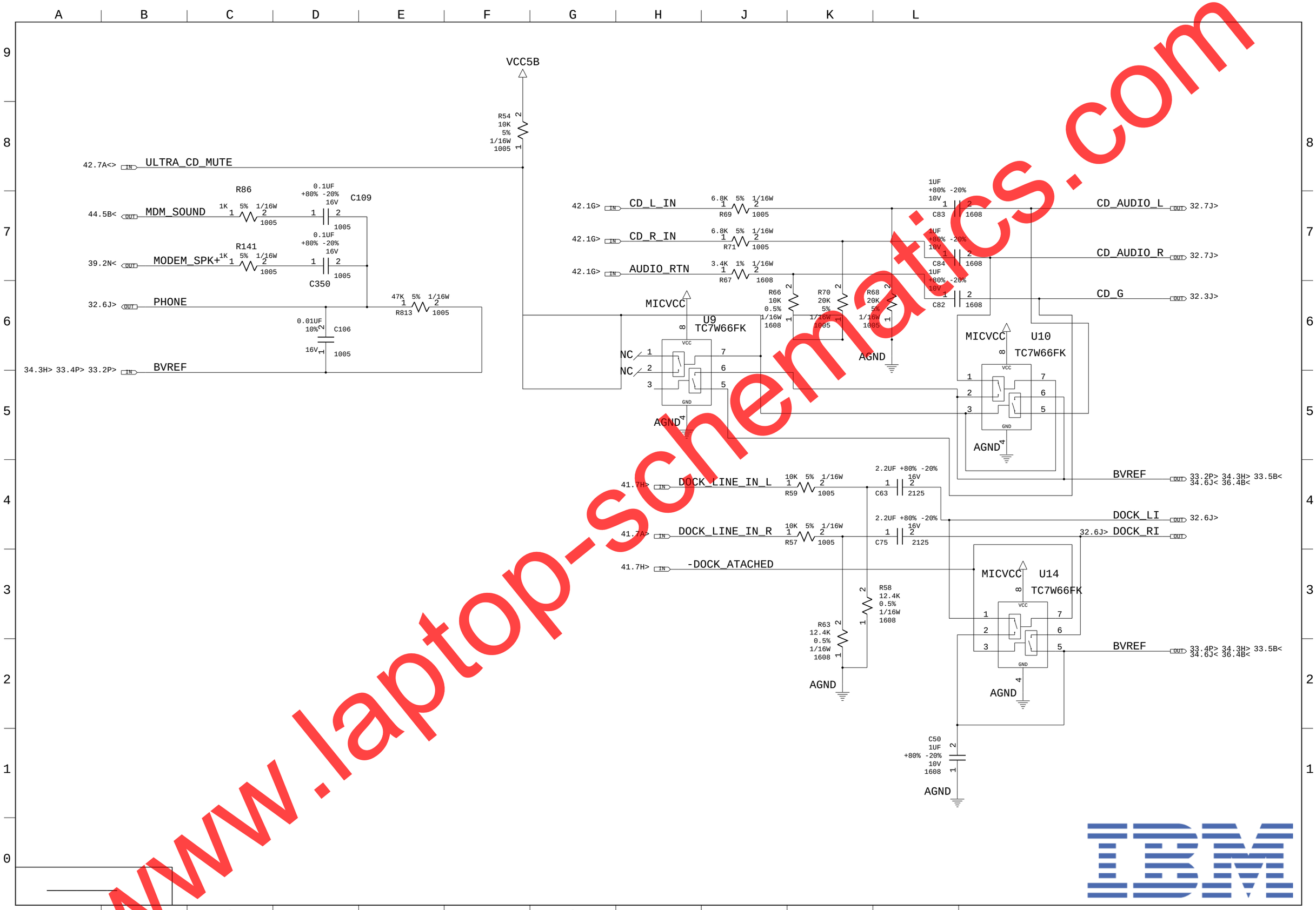

www.laptop-schematics.com

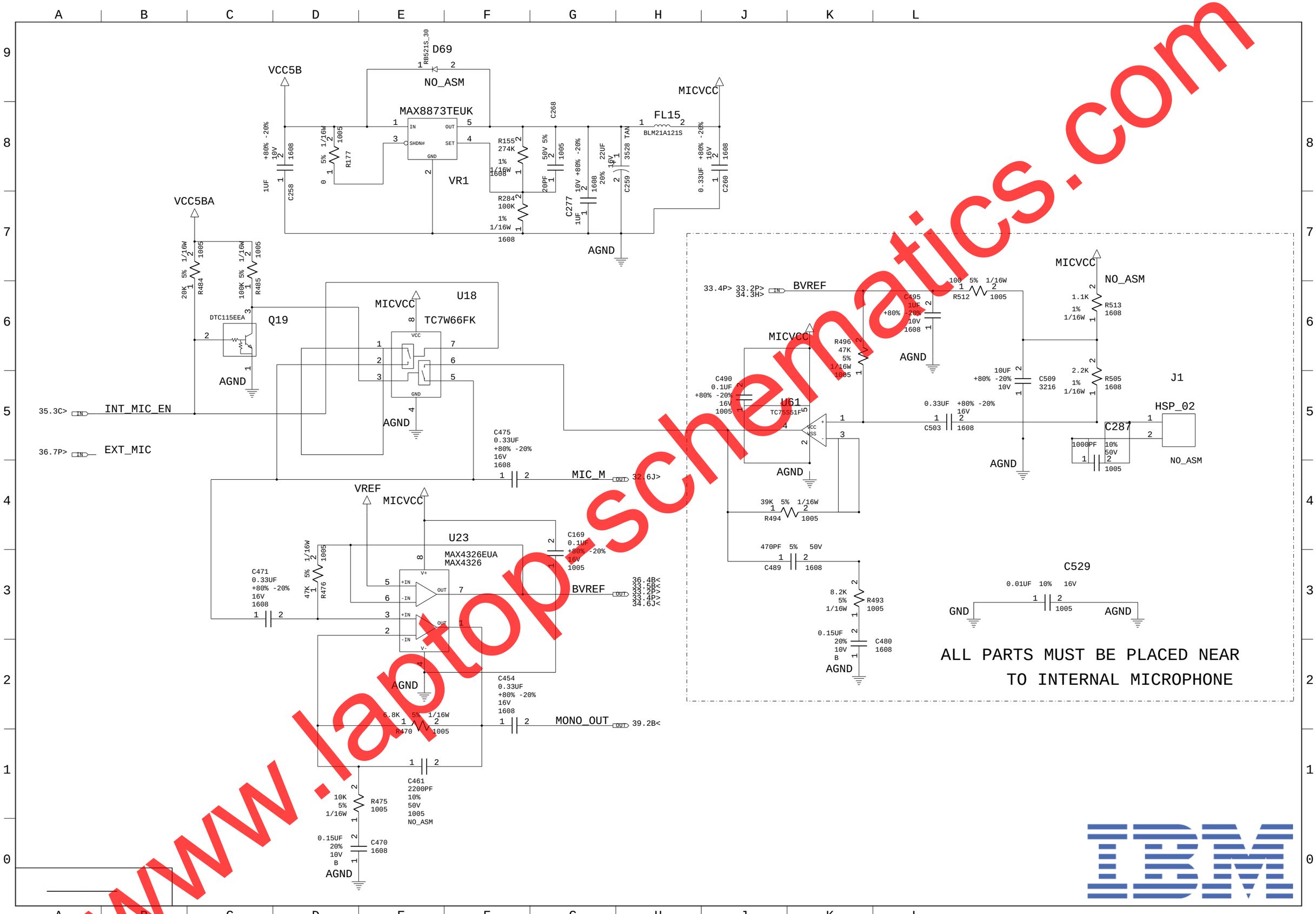

www.laptopschematics.com

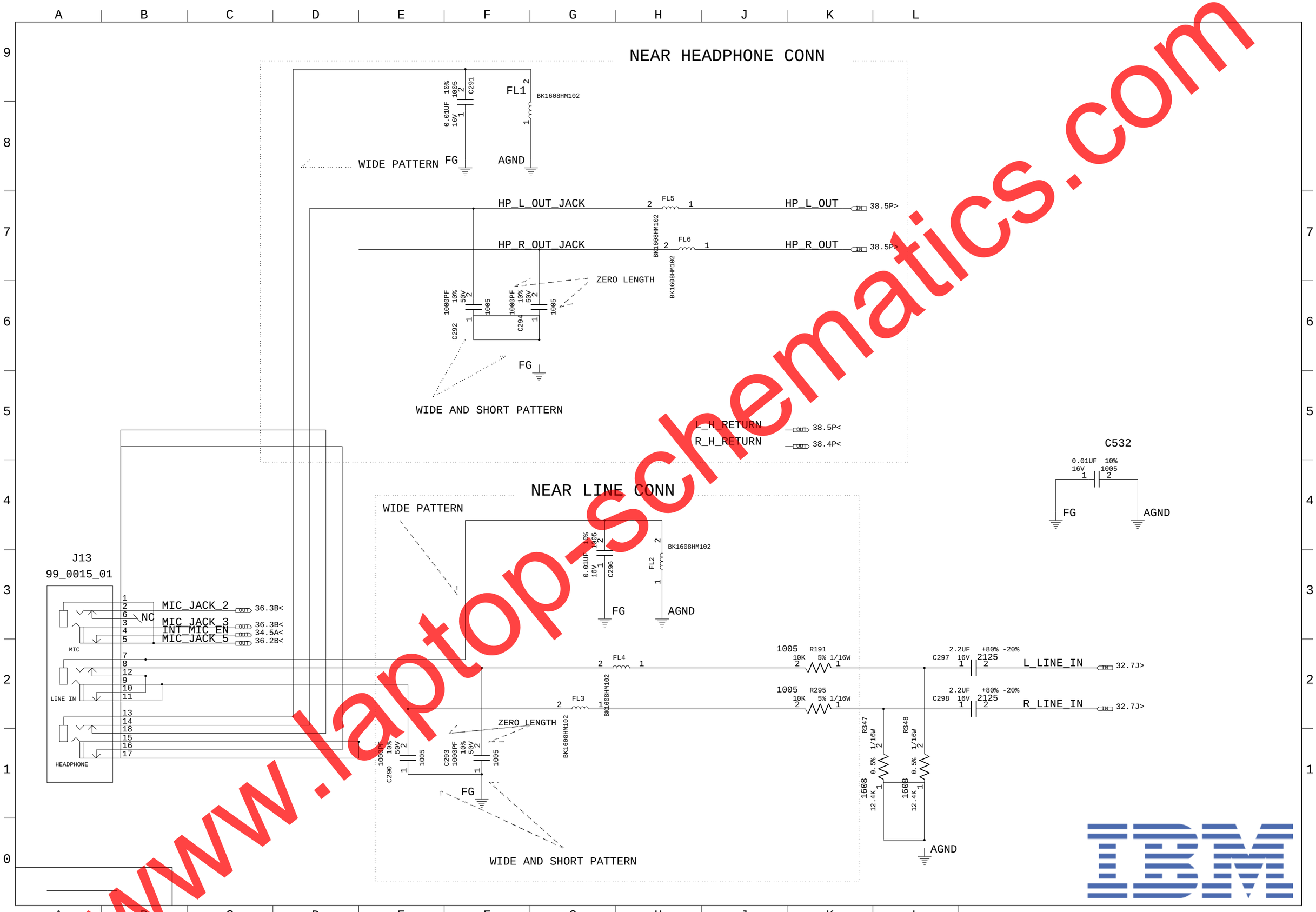

www.laptop-schematics.com

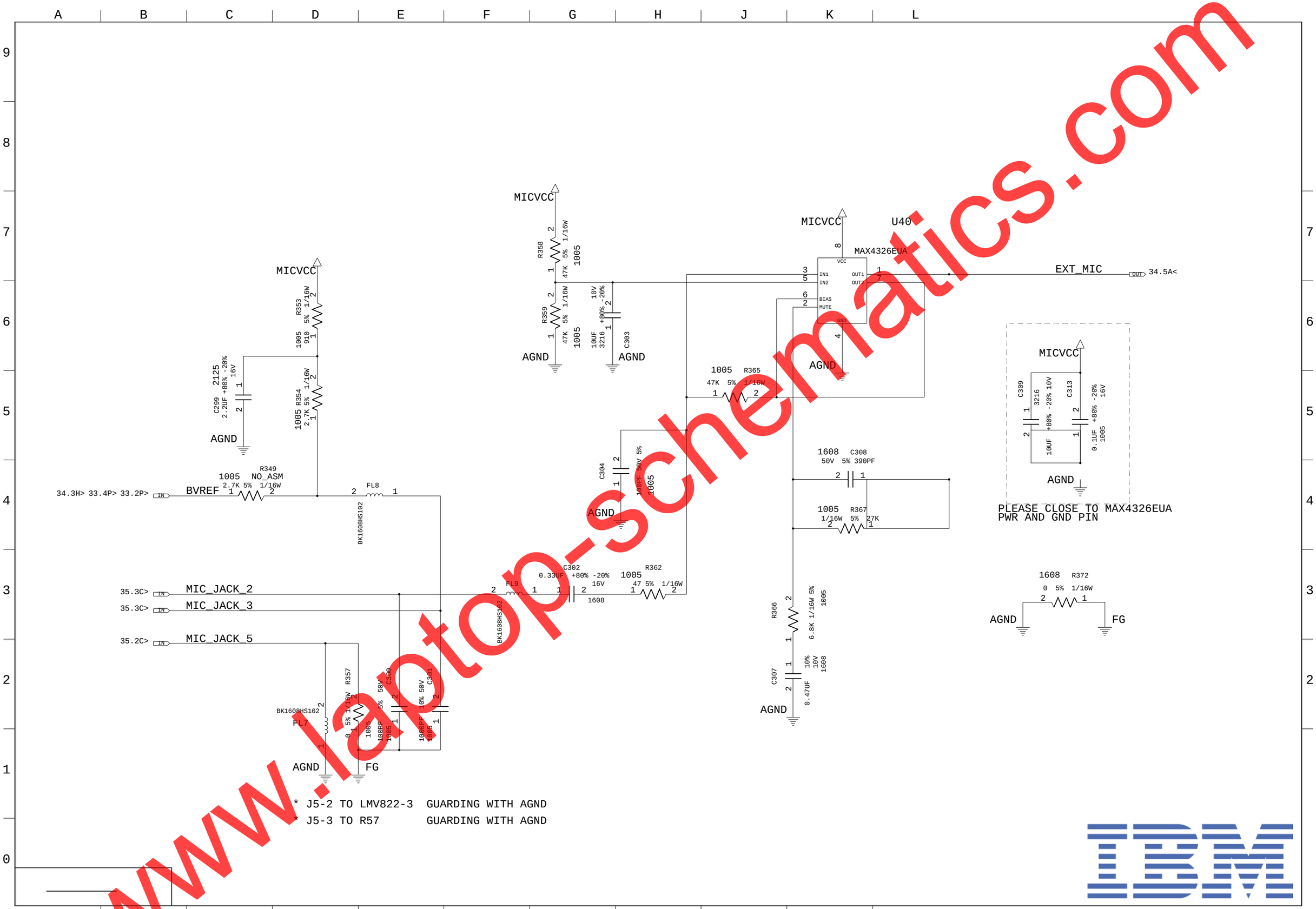

www.laptop-schematics.com

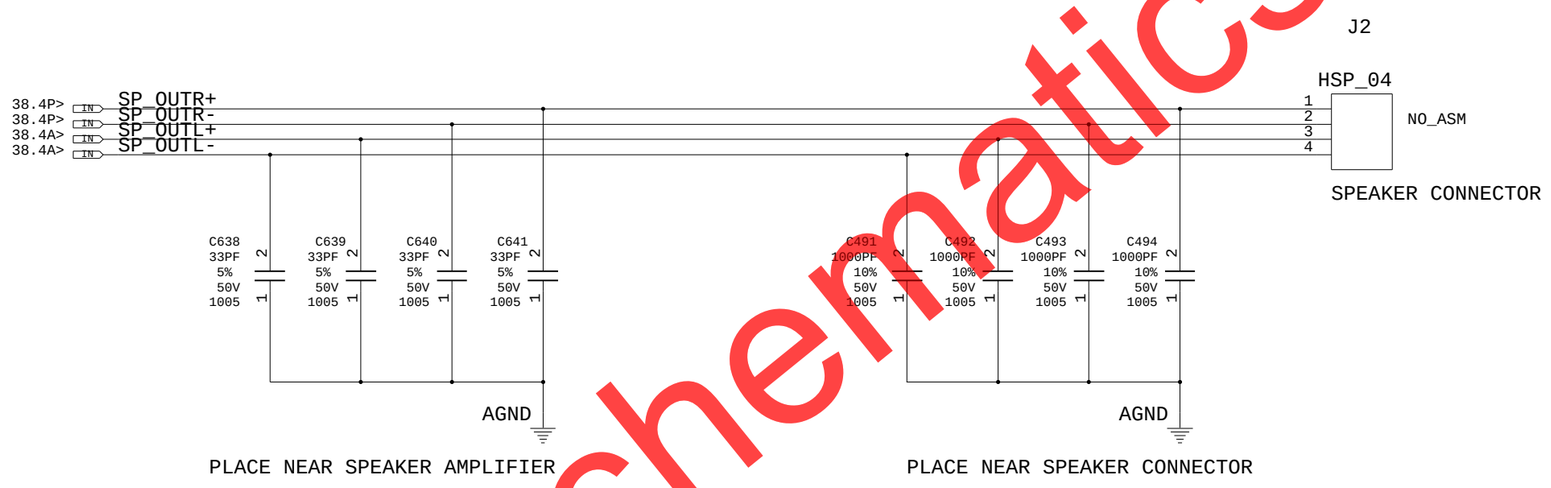

www.laptop-schematics.com

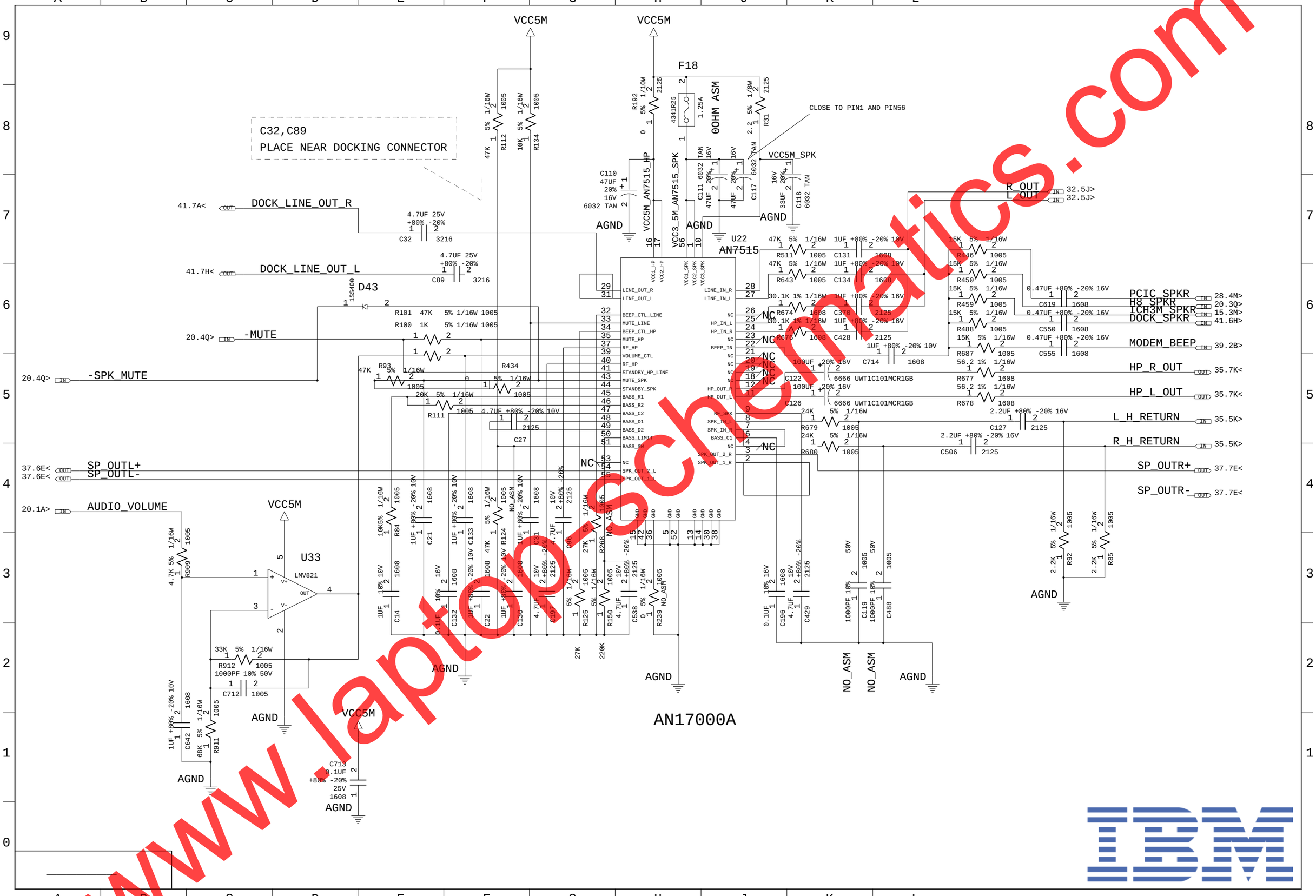

www.laptop-schematics.com

MINI PCI

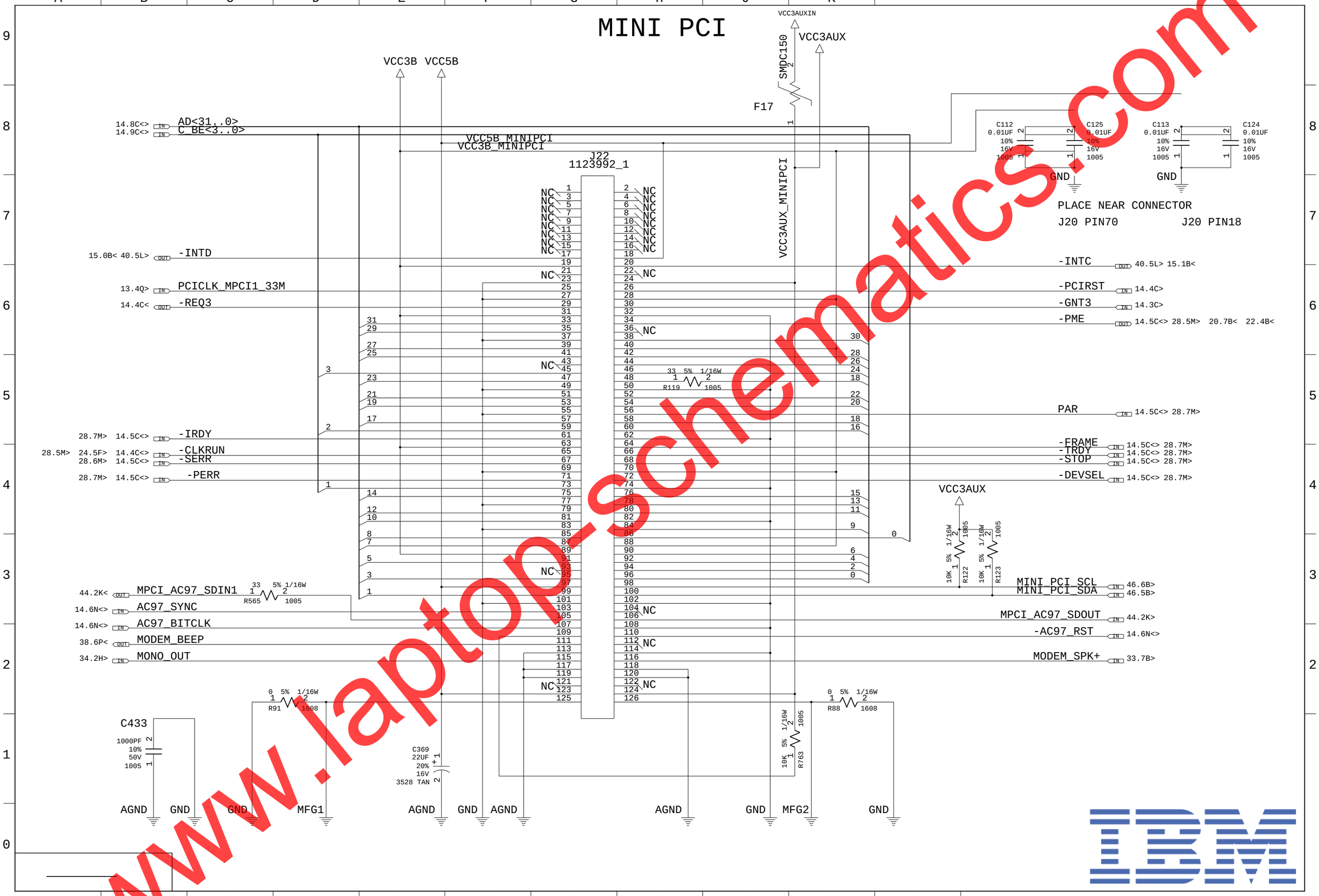

www.laptop-schematics.com

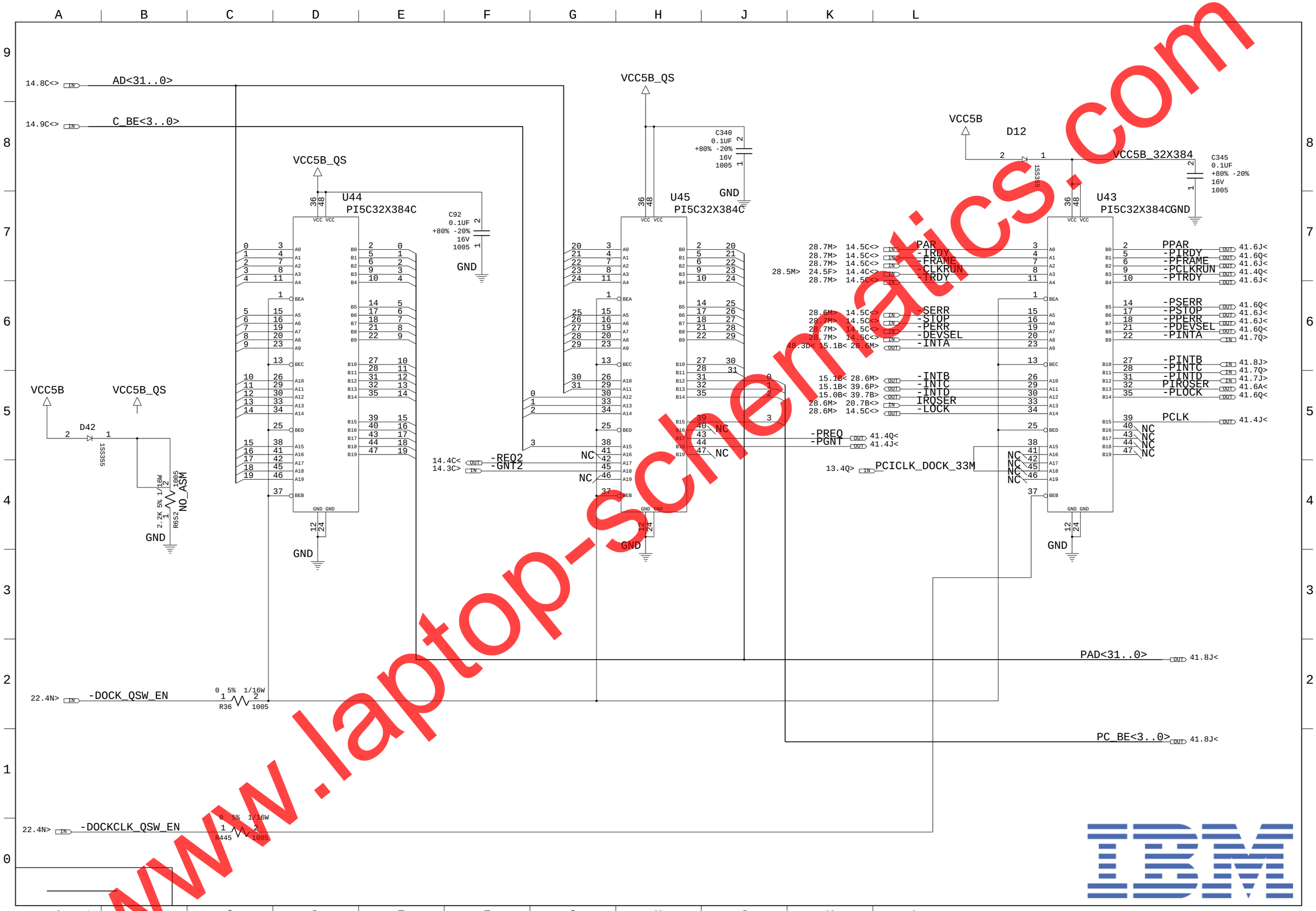

www.laptop-schematics.com

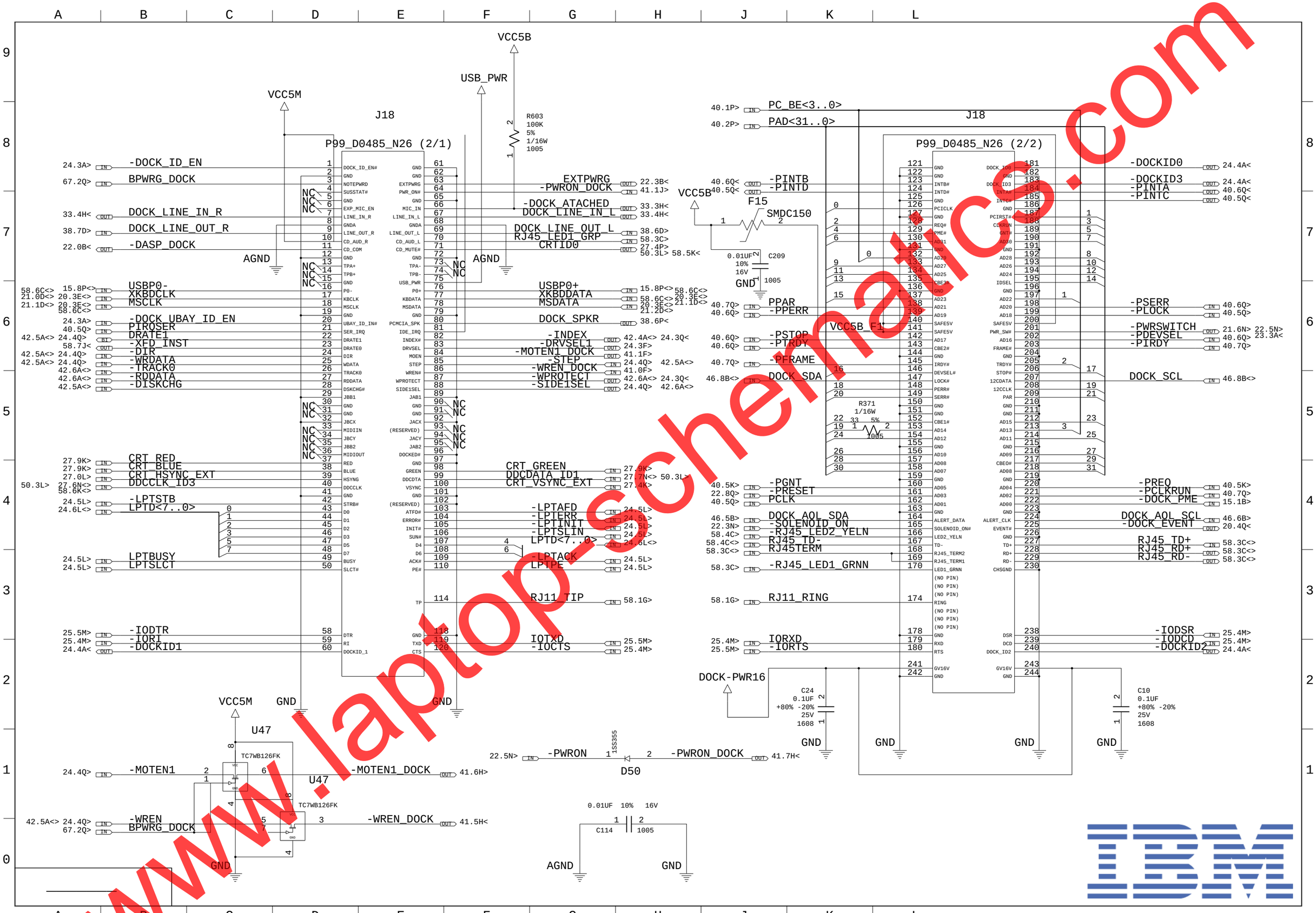

www.laptop-schematics.com

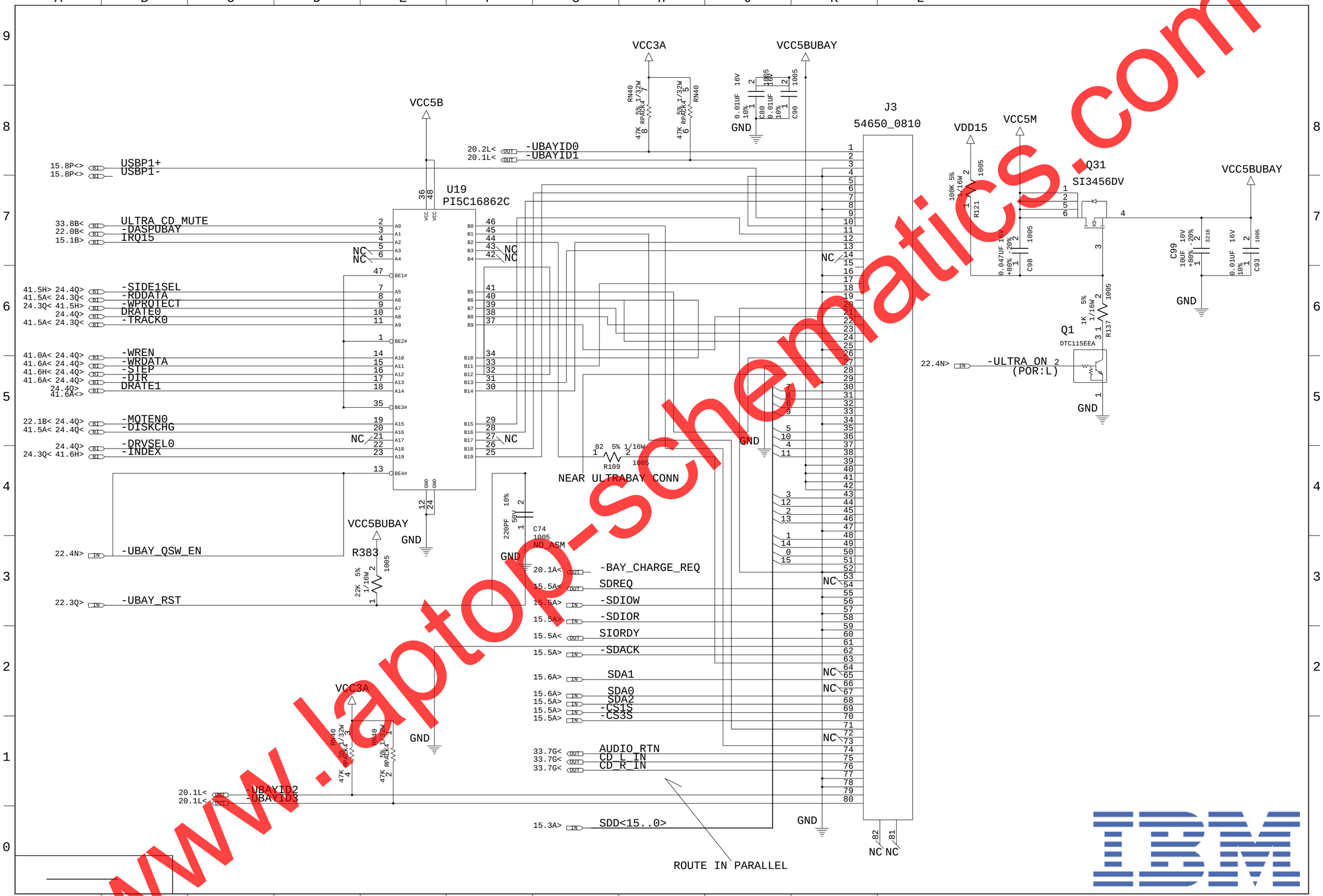

www.laptop-schematics.com

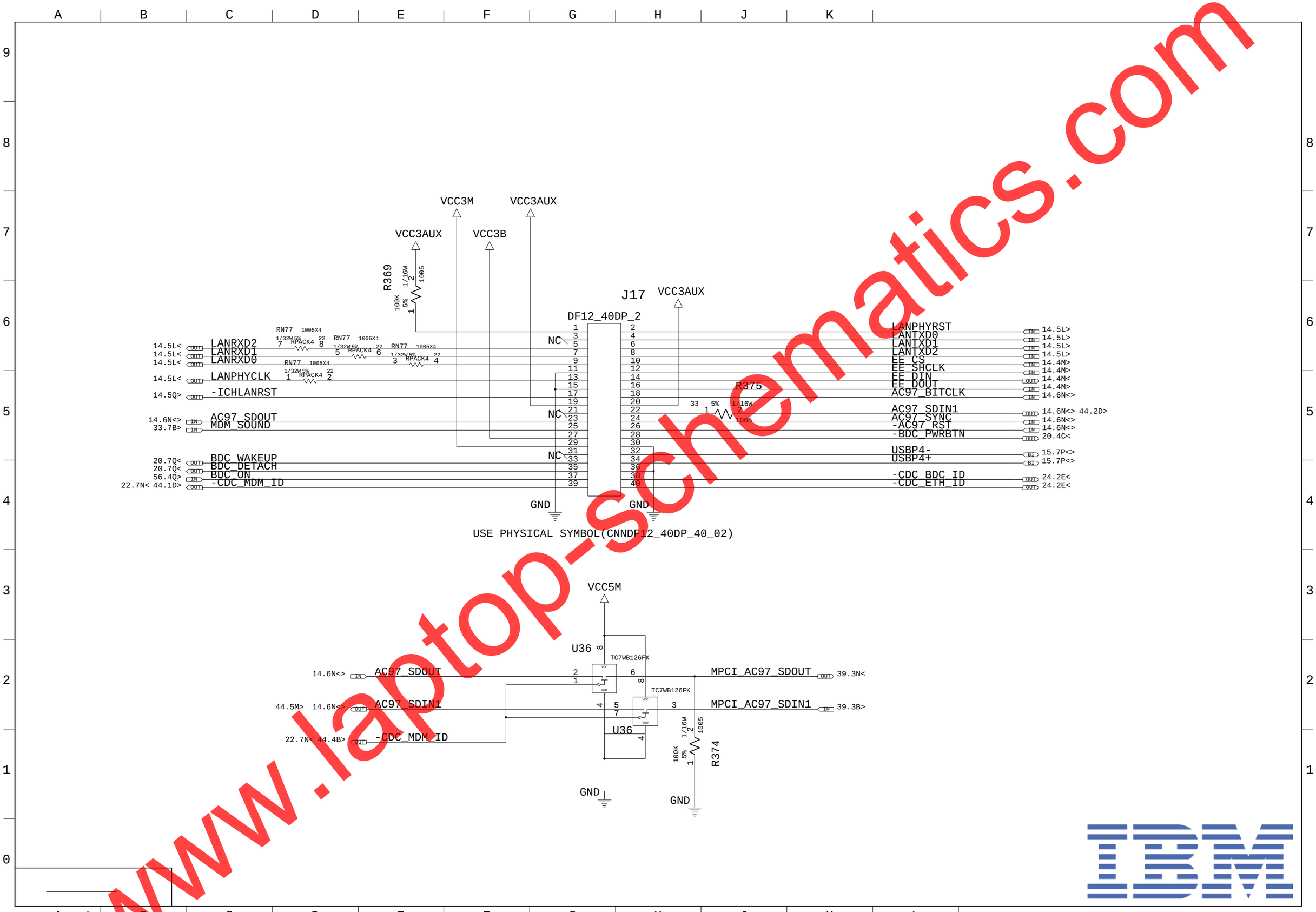

www.laptop-schematics.com

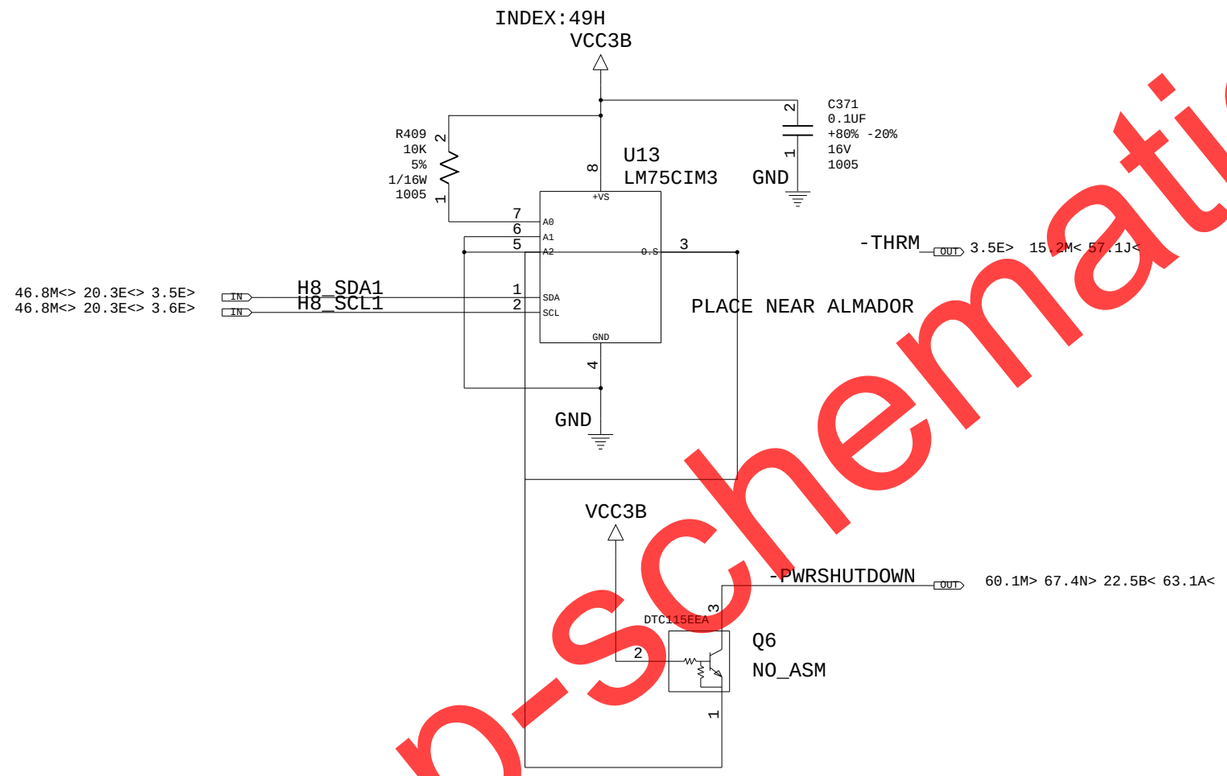

www.laptop-schematics.com

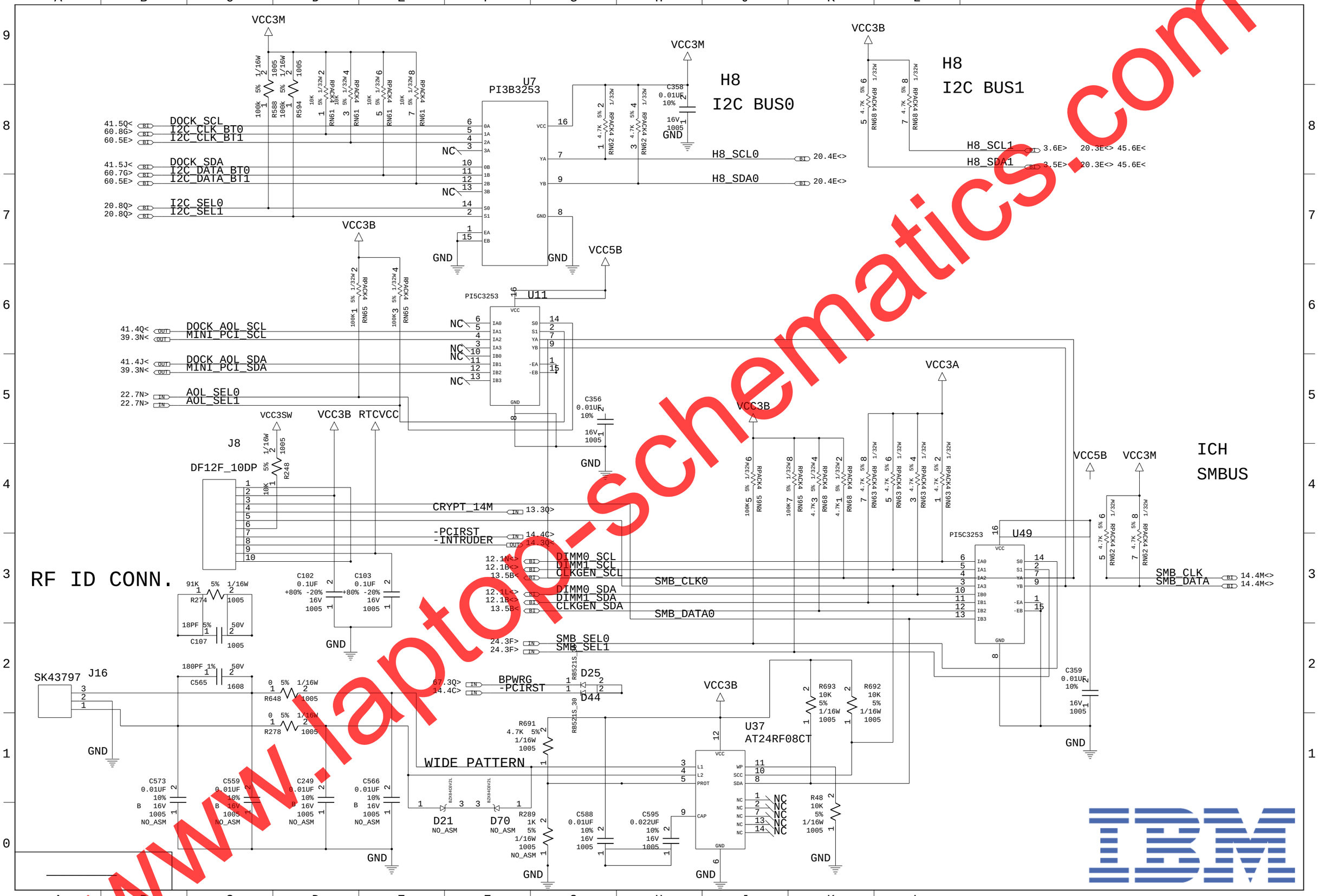

www.laptop-schematics.com

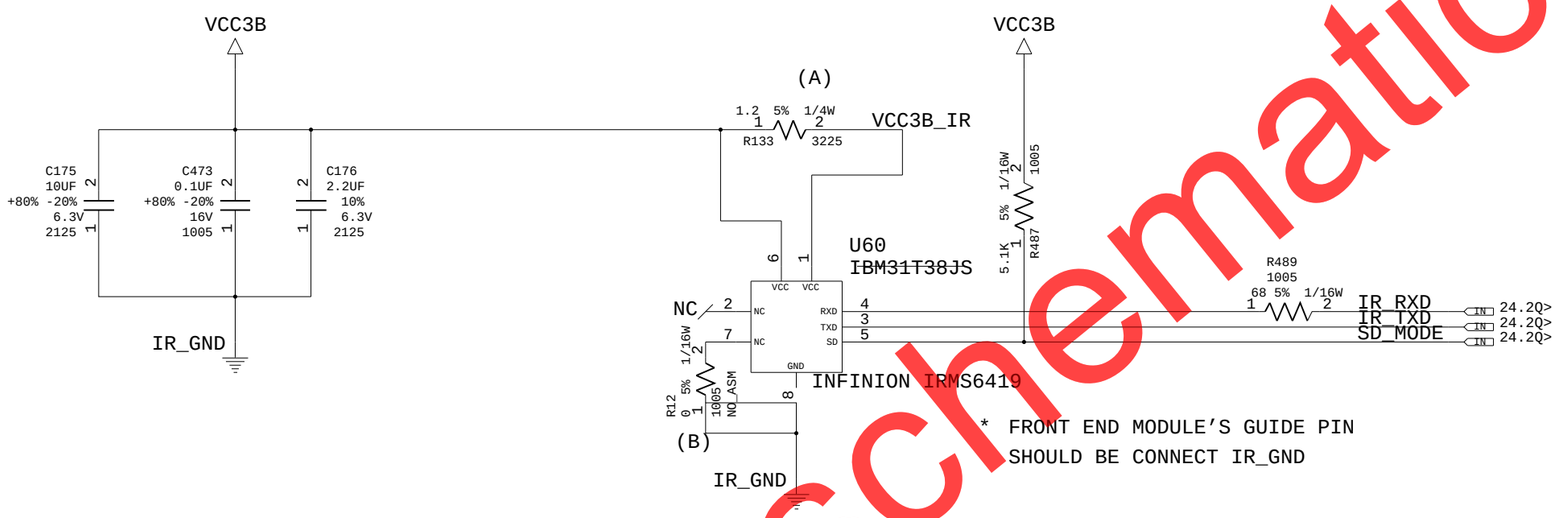

* FRONT END MODULE'S GUIDE PIN
SHOULD BE CONNECT IR_GND

* THIS LOGIC BASED ON INFINION

	(A)	(B)
INFINION IRMS6419	1.2 ASM	NO-ASM
CALIBRE CHX2000	0 ASM	0 ASM

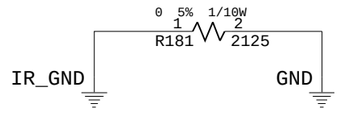

www.laptop-schematics.com

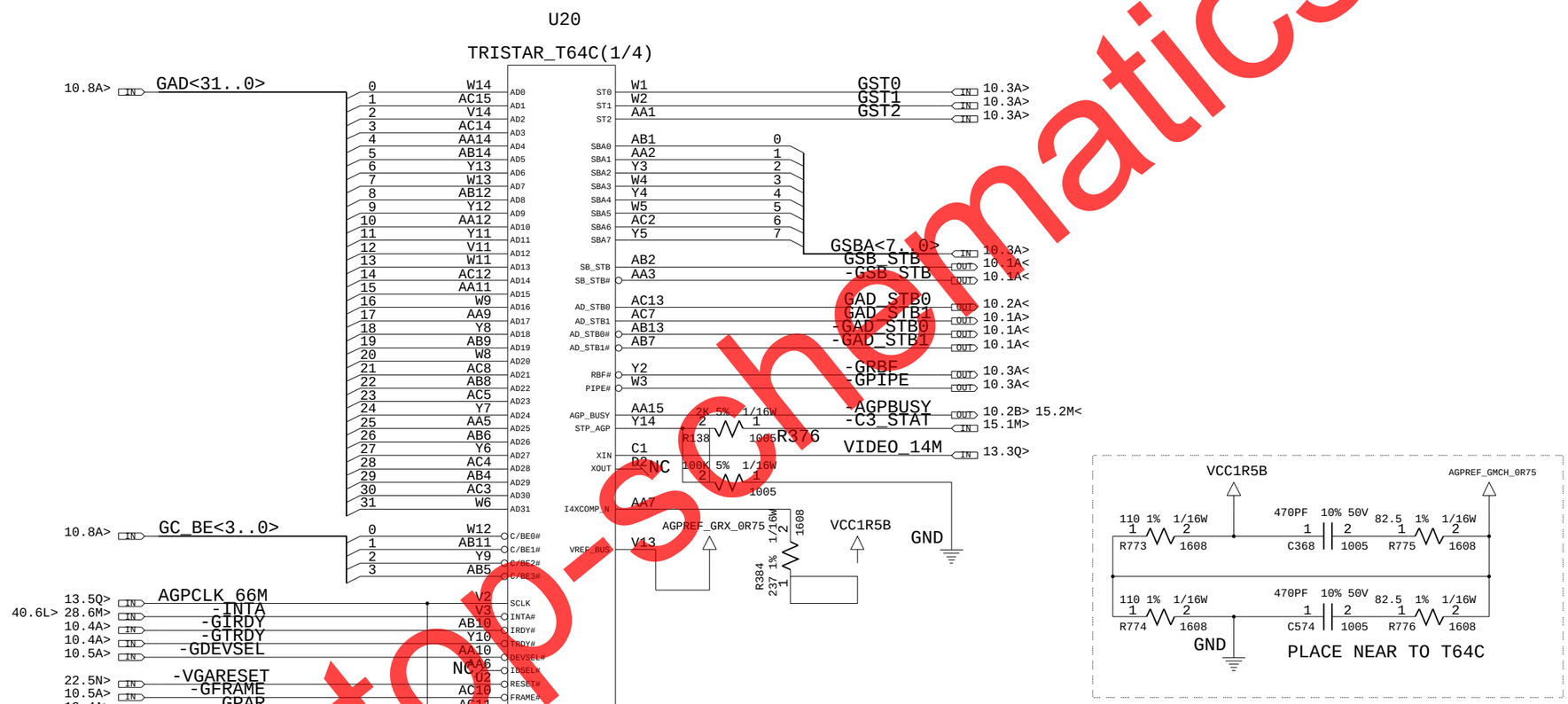

www.laptop-schematics.com

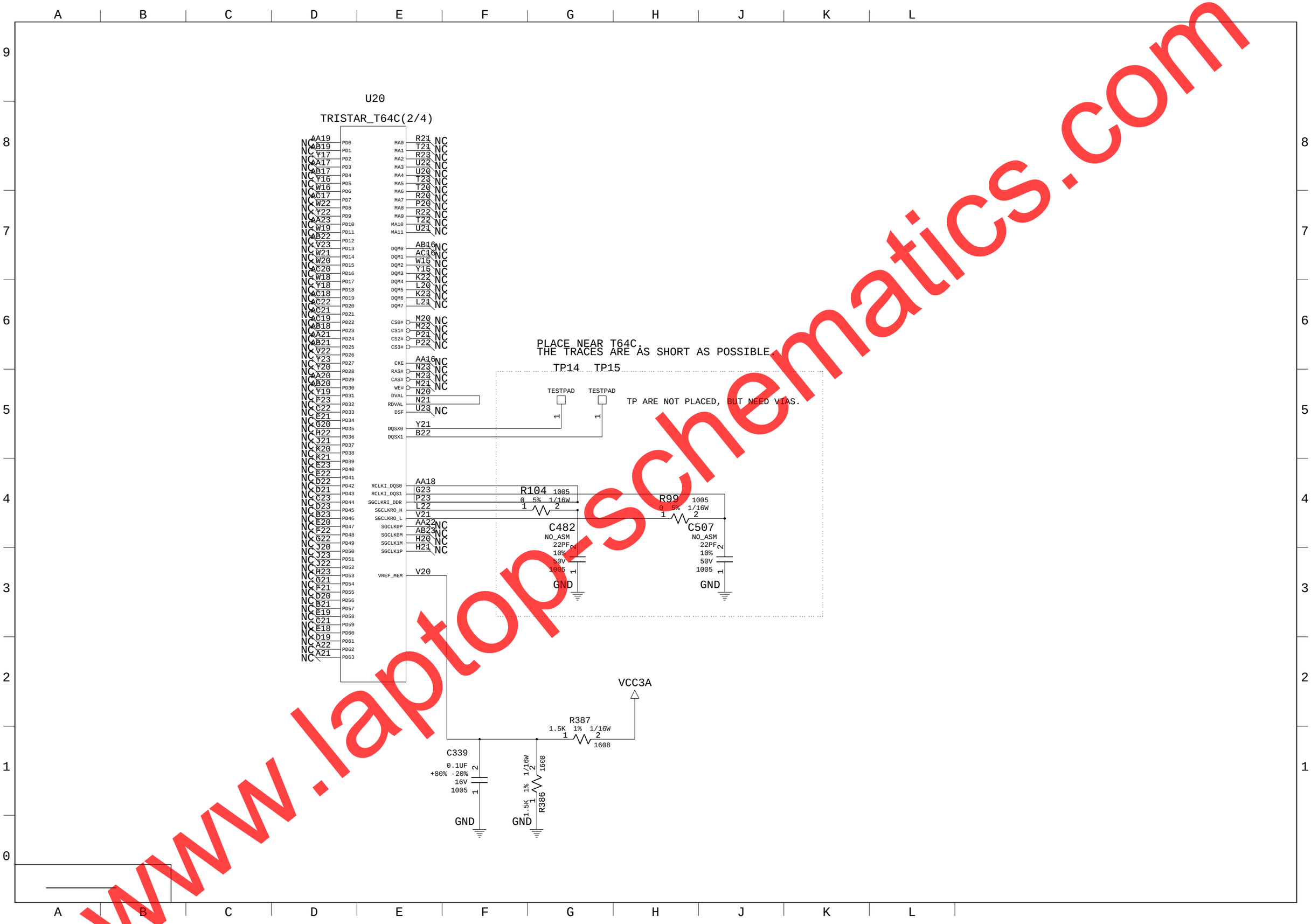

www.laptop-schematics.com

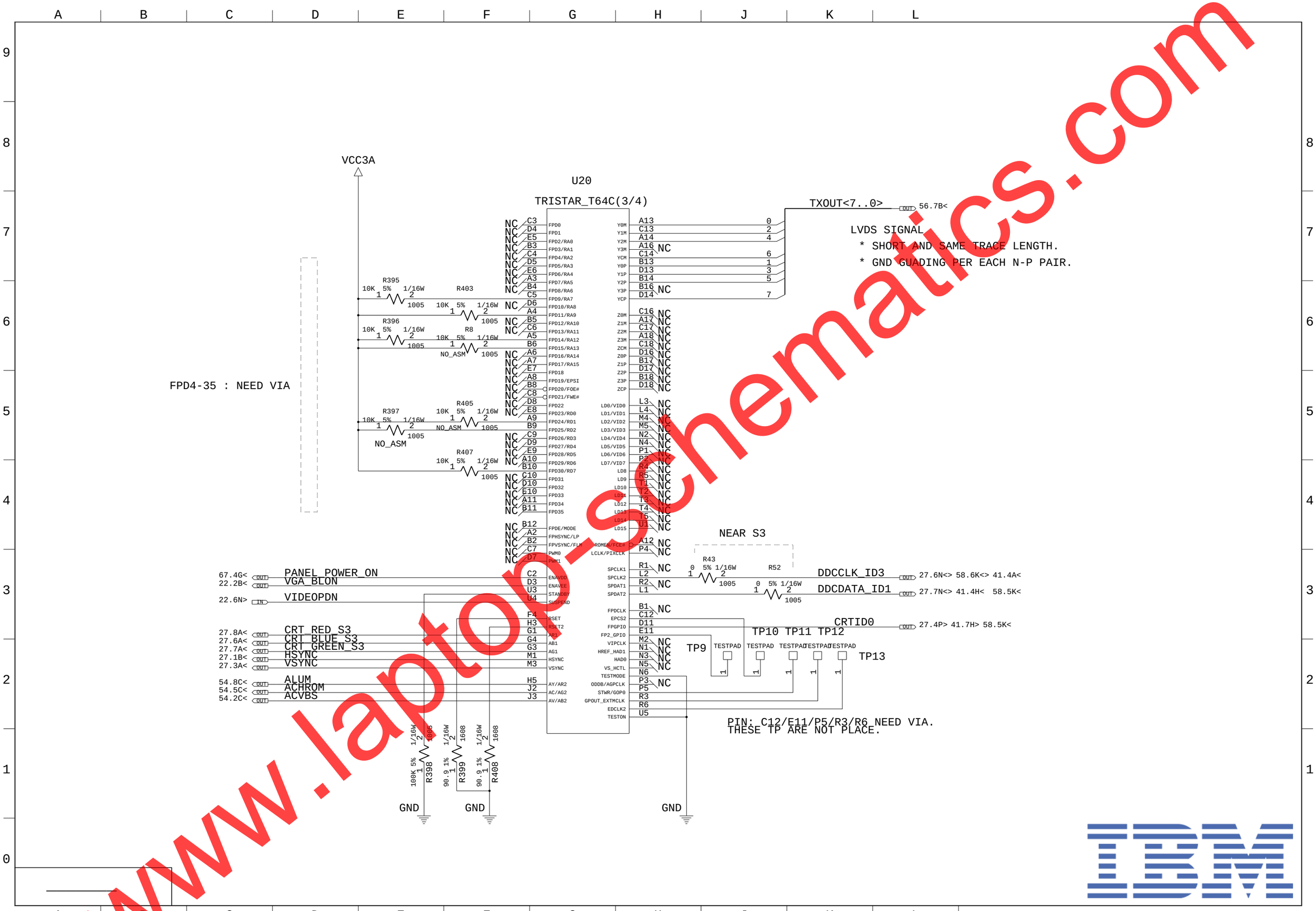

www.laptop-schematics.com

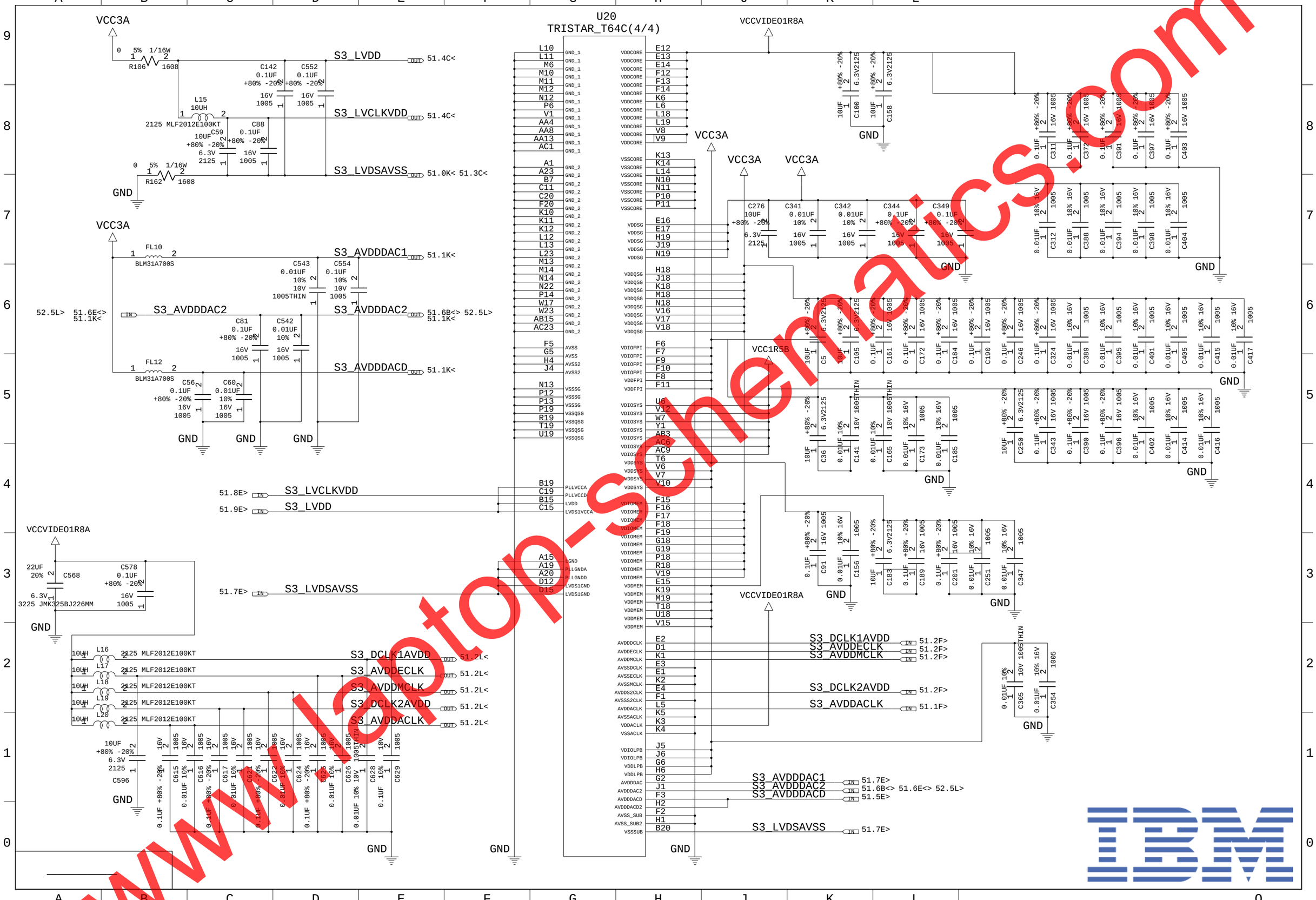

www.laptop-schematics.com

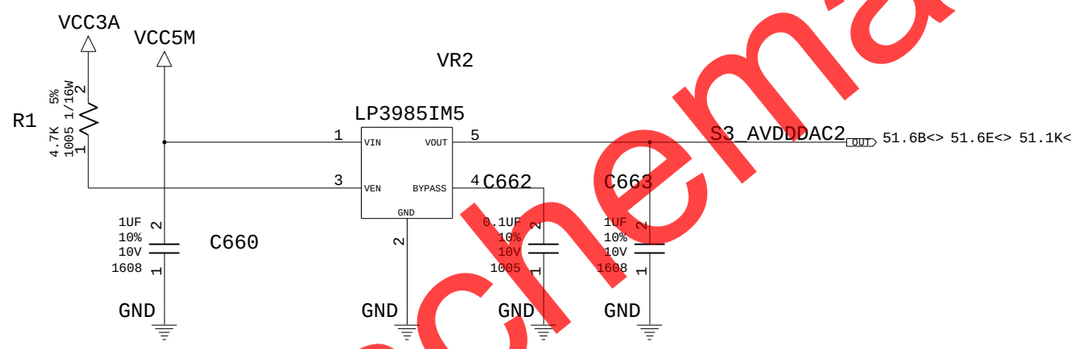

www.laptop-schematics.com

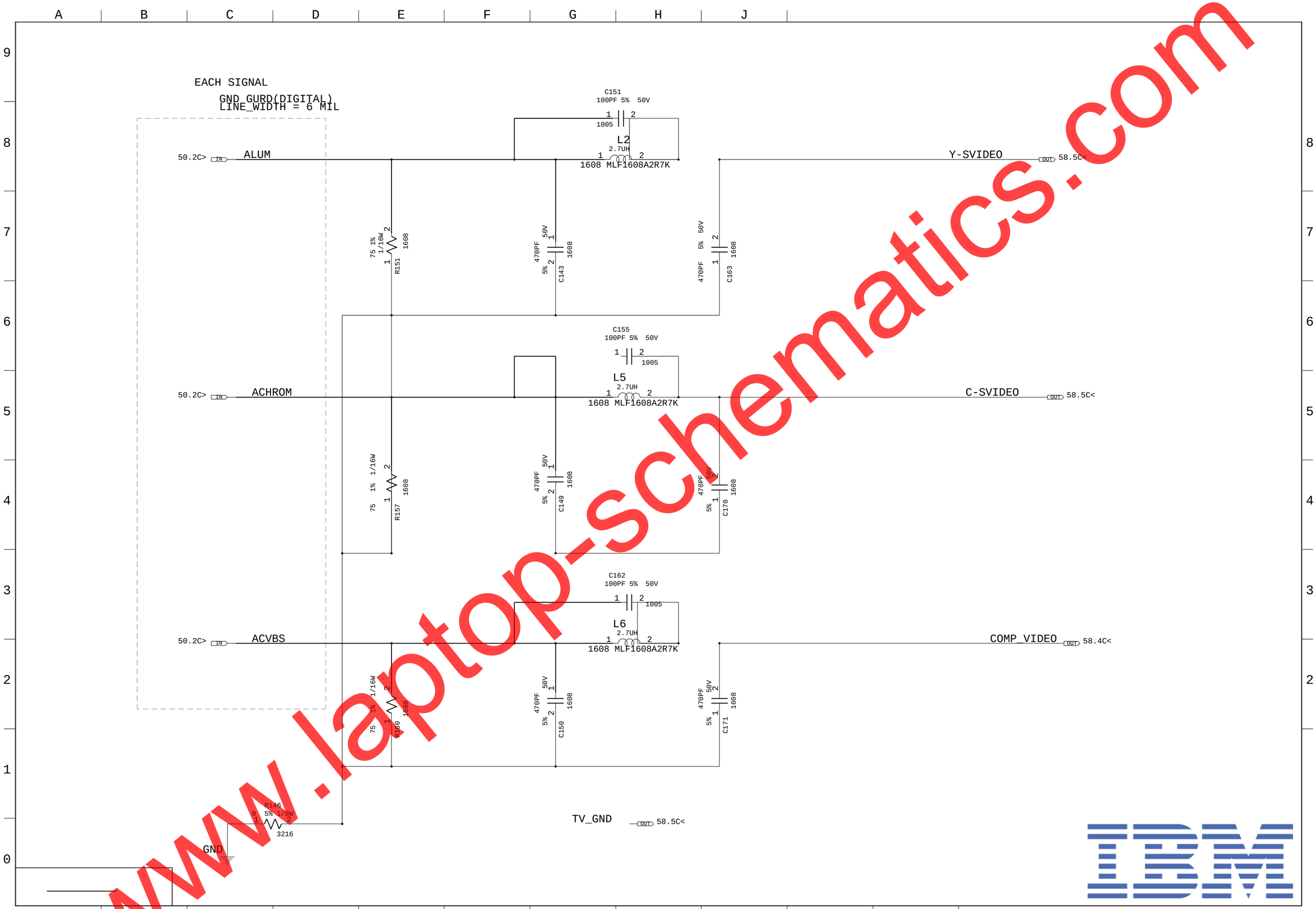

www.laptop-schematics.com

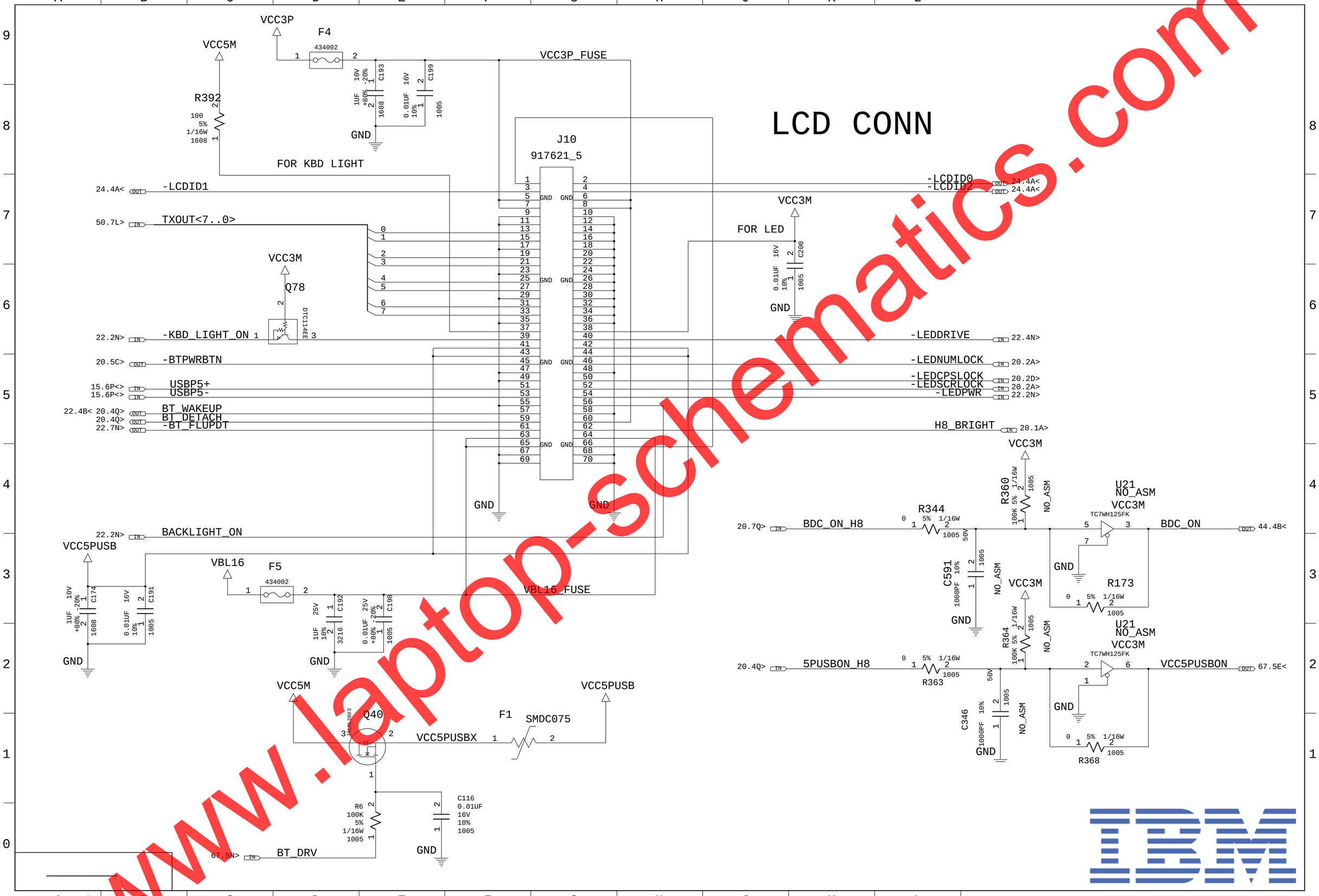

www.laptop-schematics.com

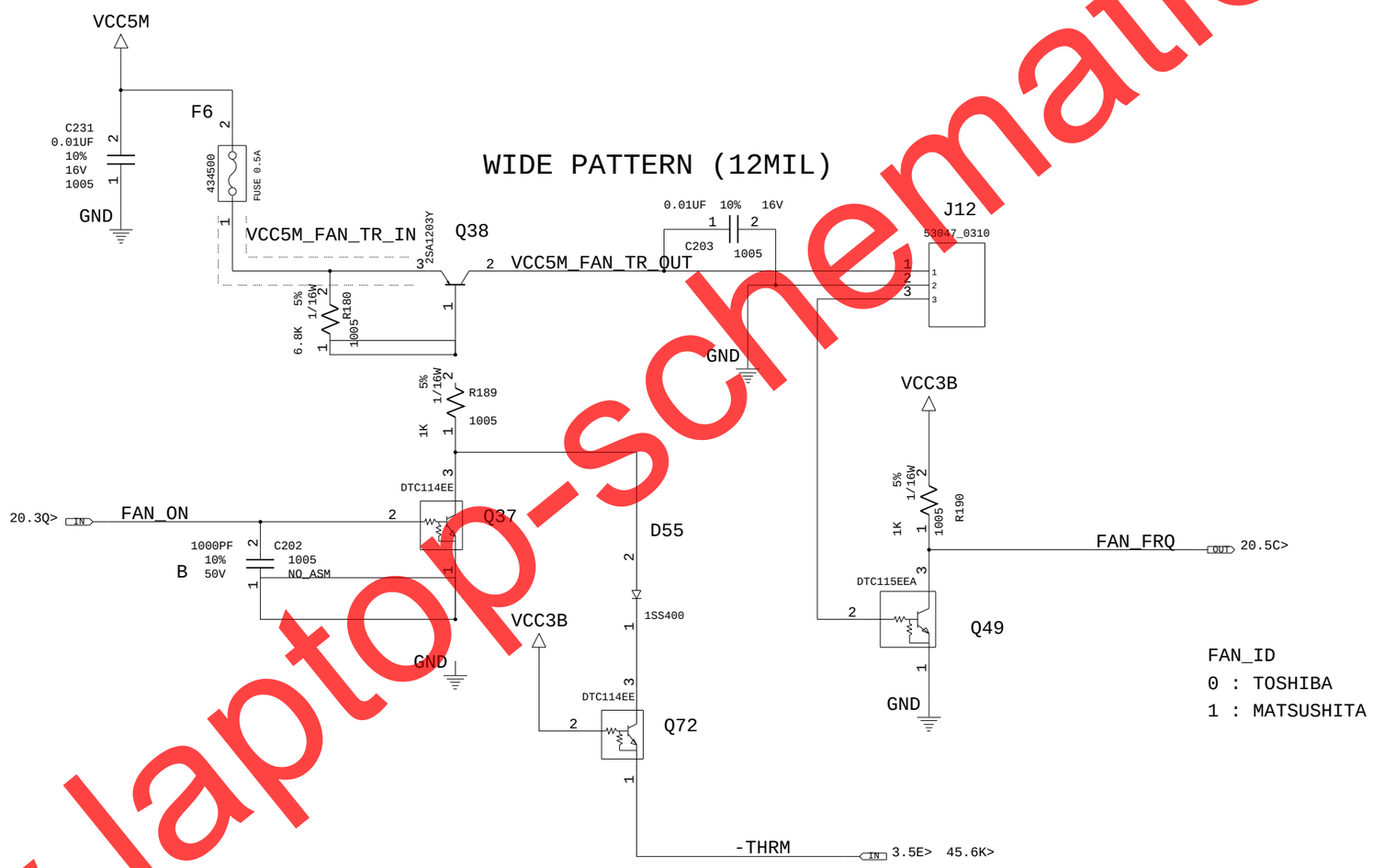

www.laptop-schematics.com

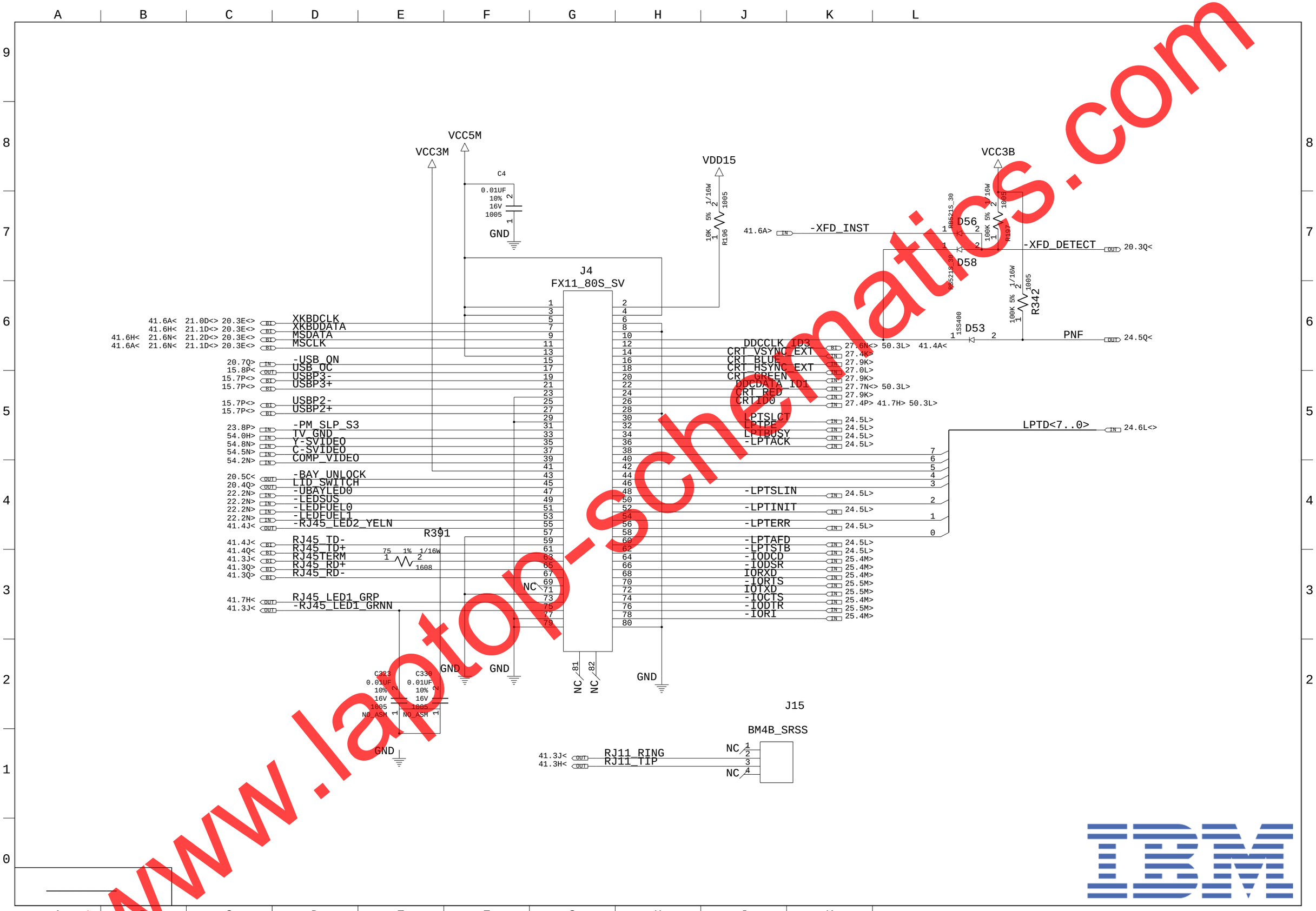

www.laptop-schematics.com

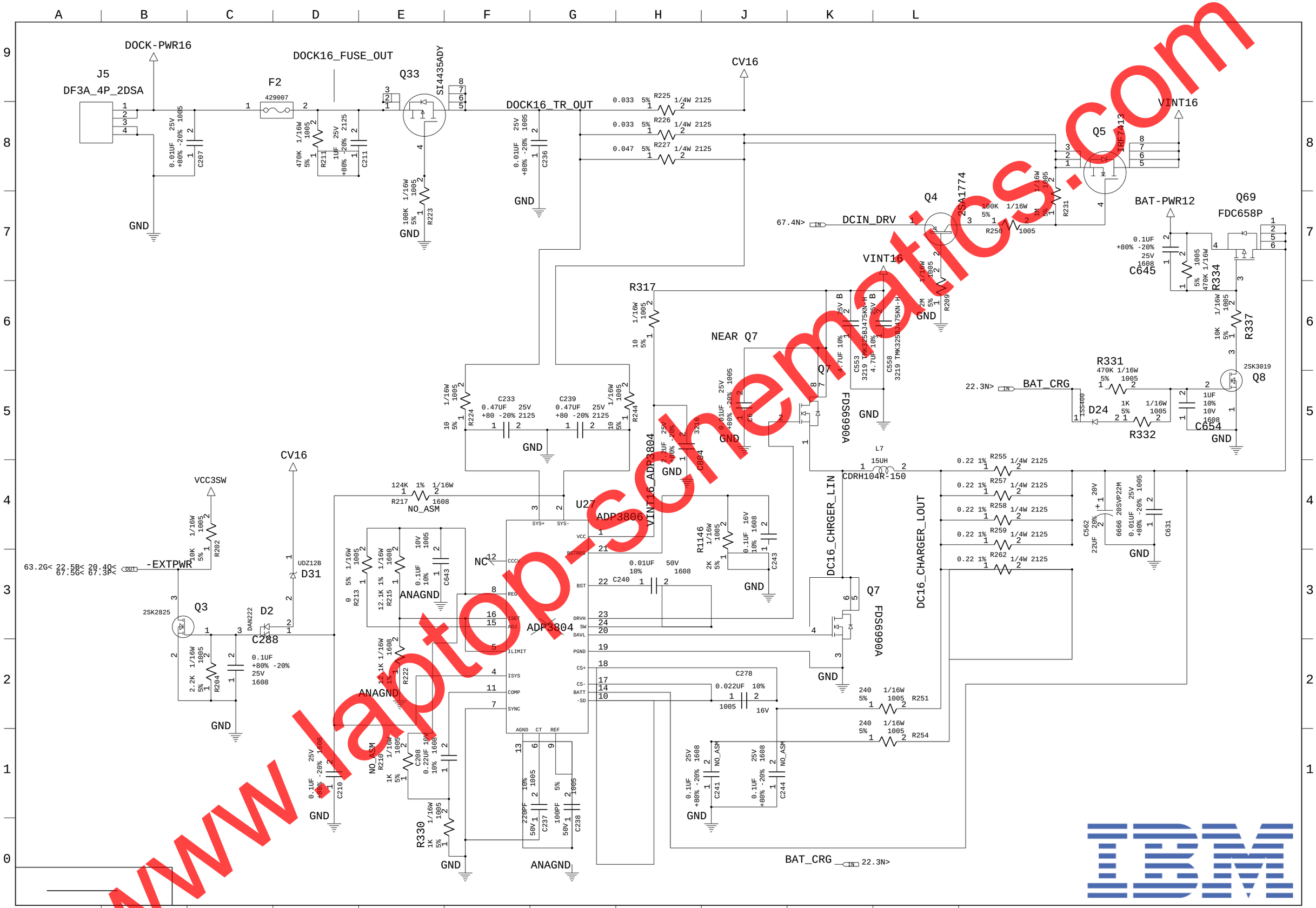

www.laptop-schematics.com

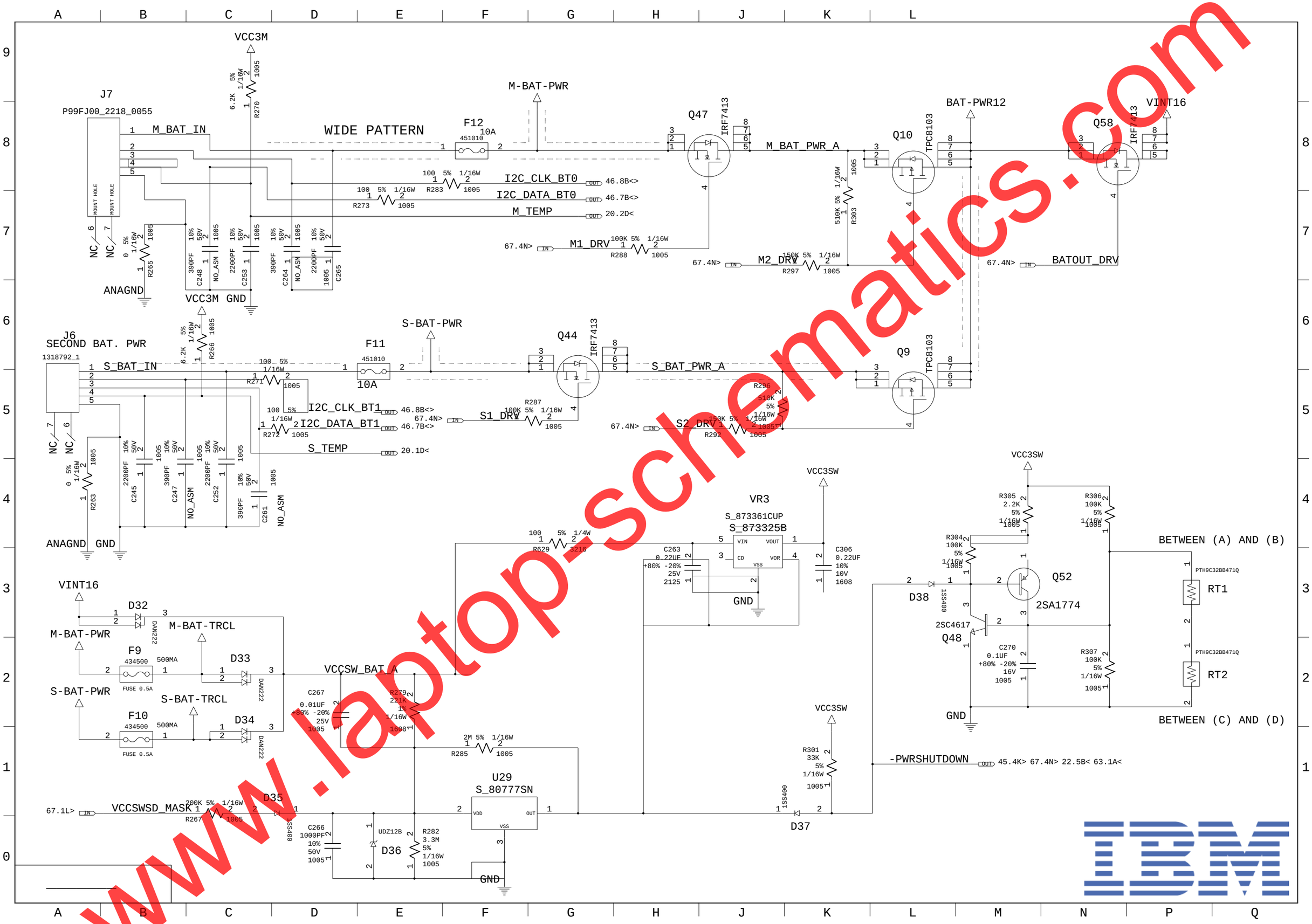

www.laptop-schematics.com

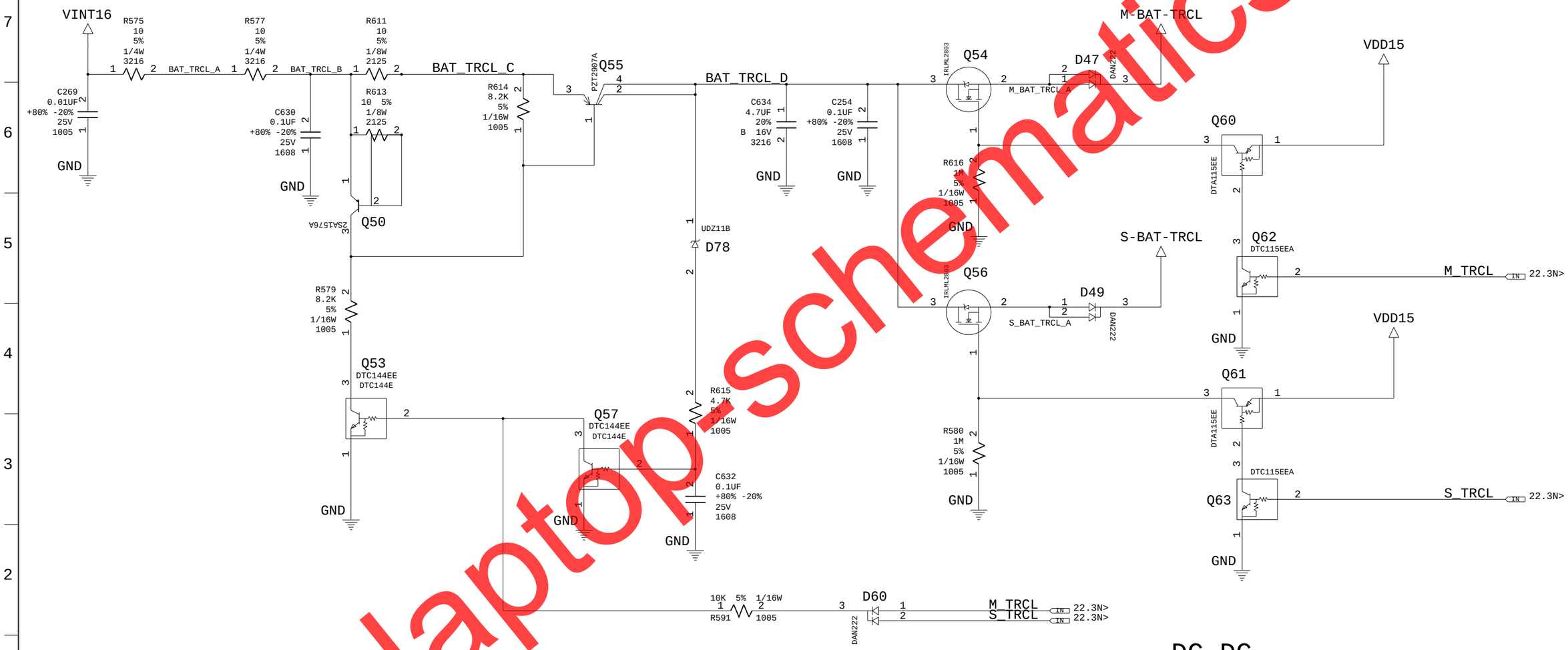

DC-DC
TRICKLE CHARGER

www.laptop-schematics.com

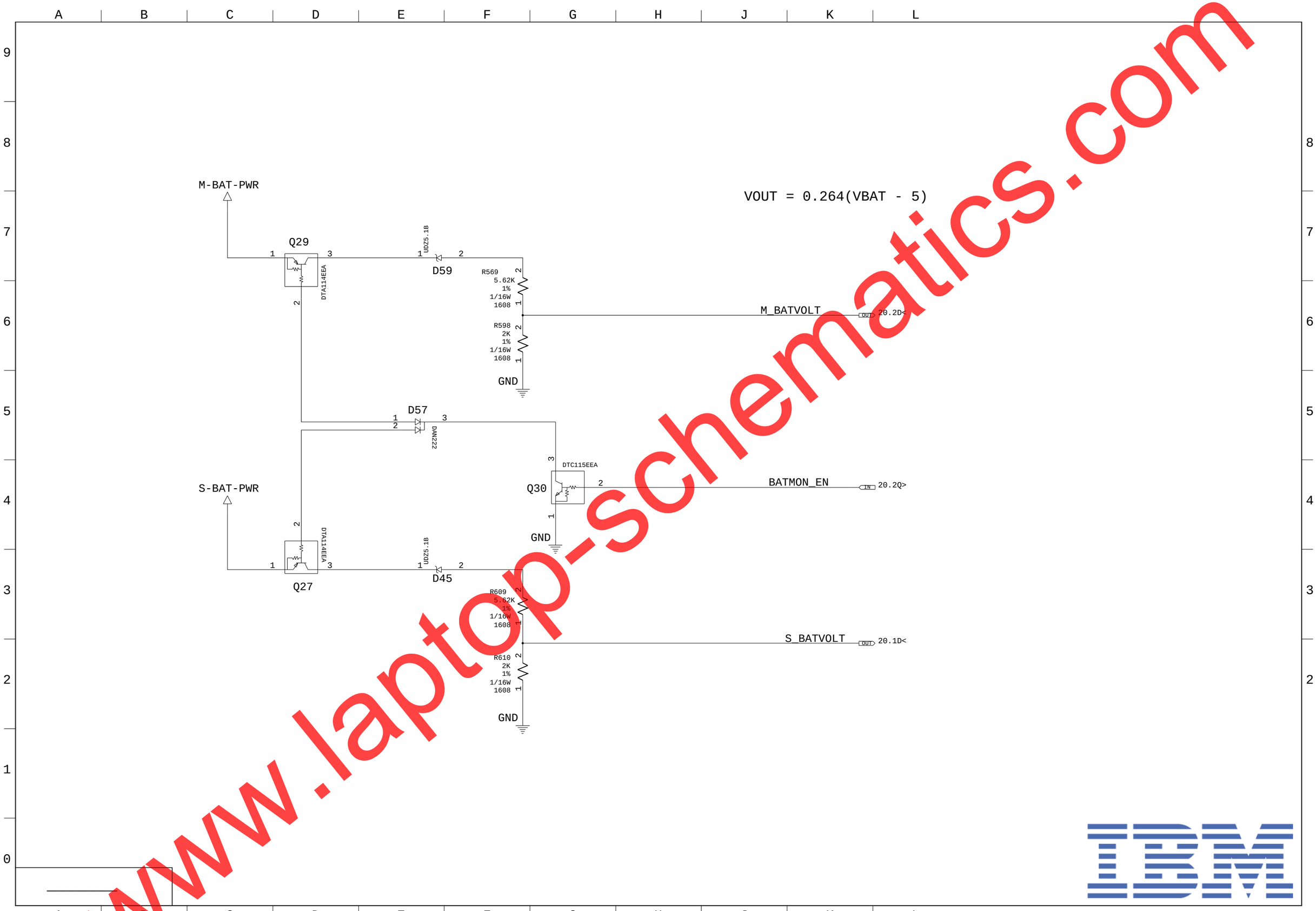

www.laptop-schematics.com

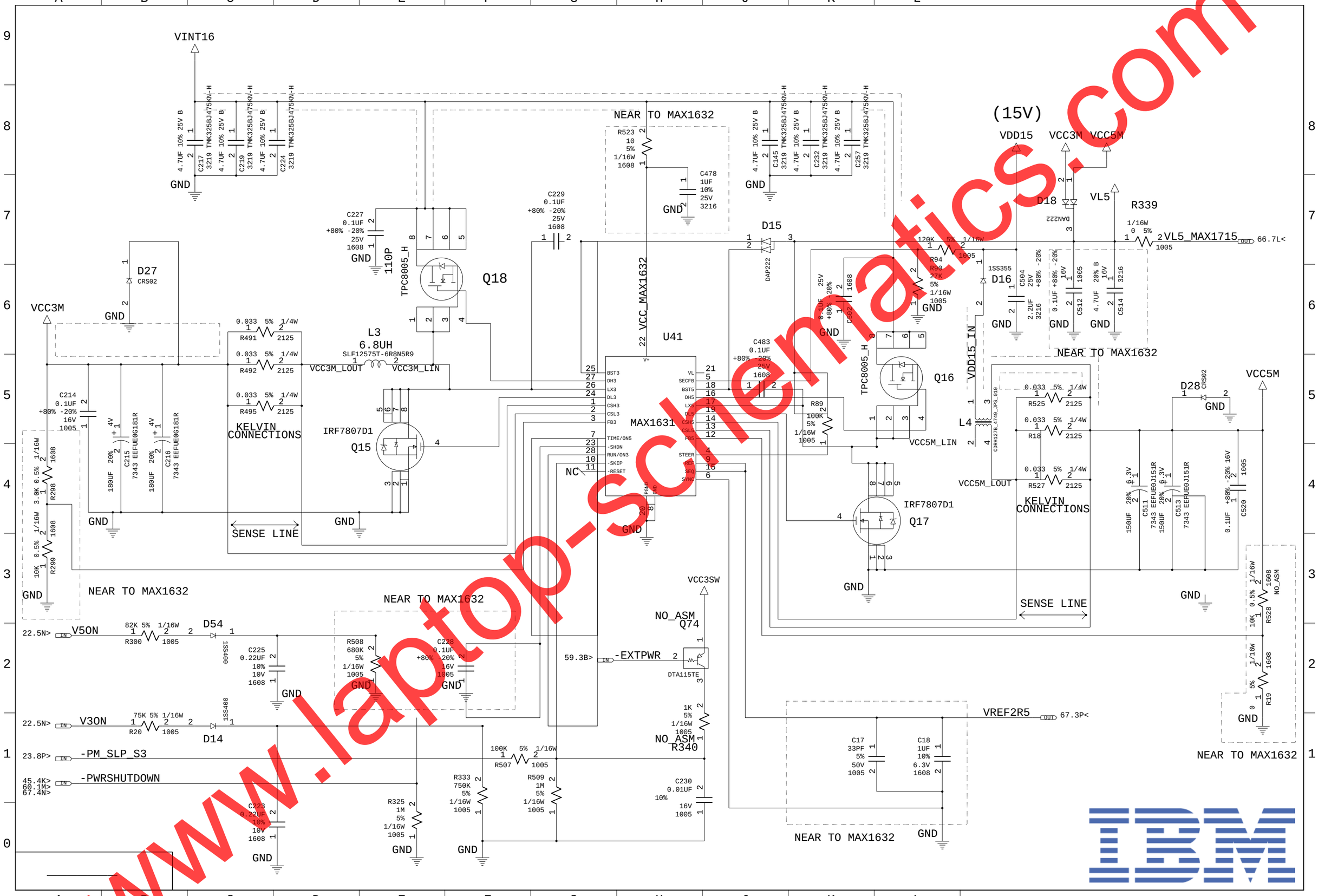

www.laptop-schematics.com

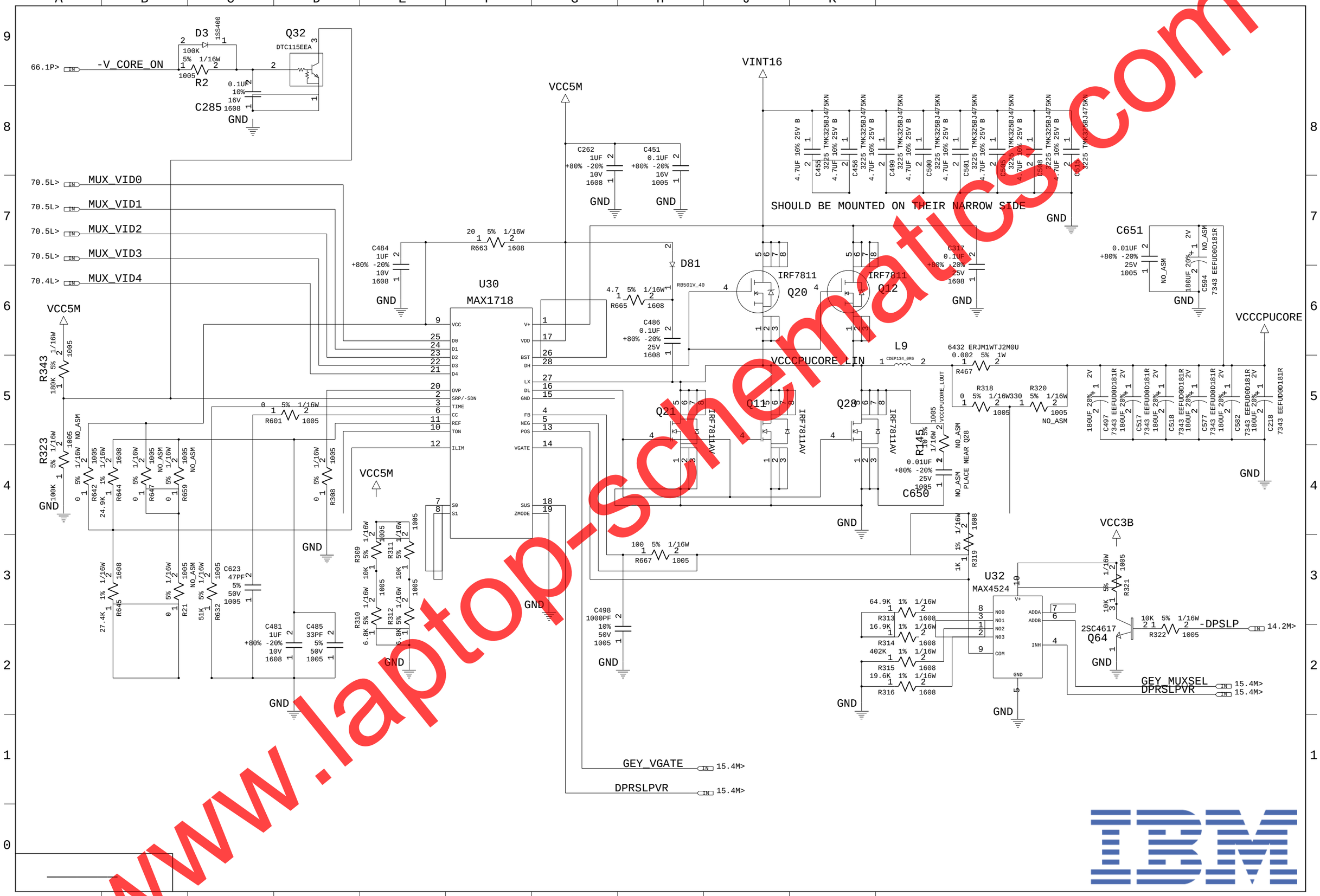

www.laptop-schematics.com

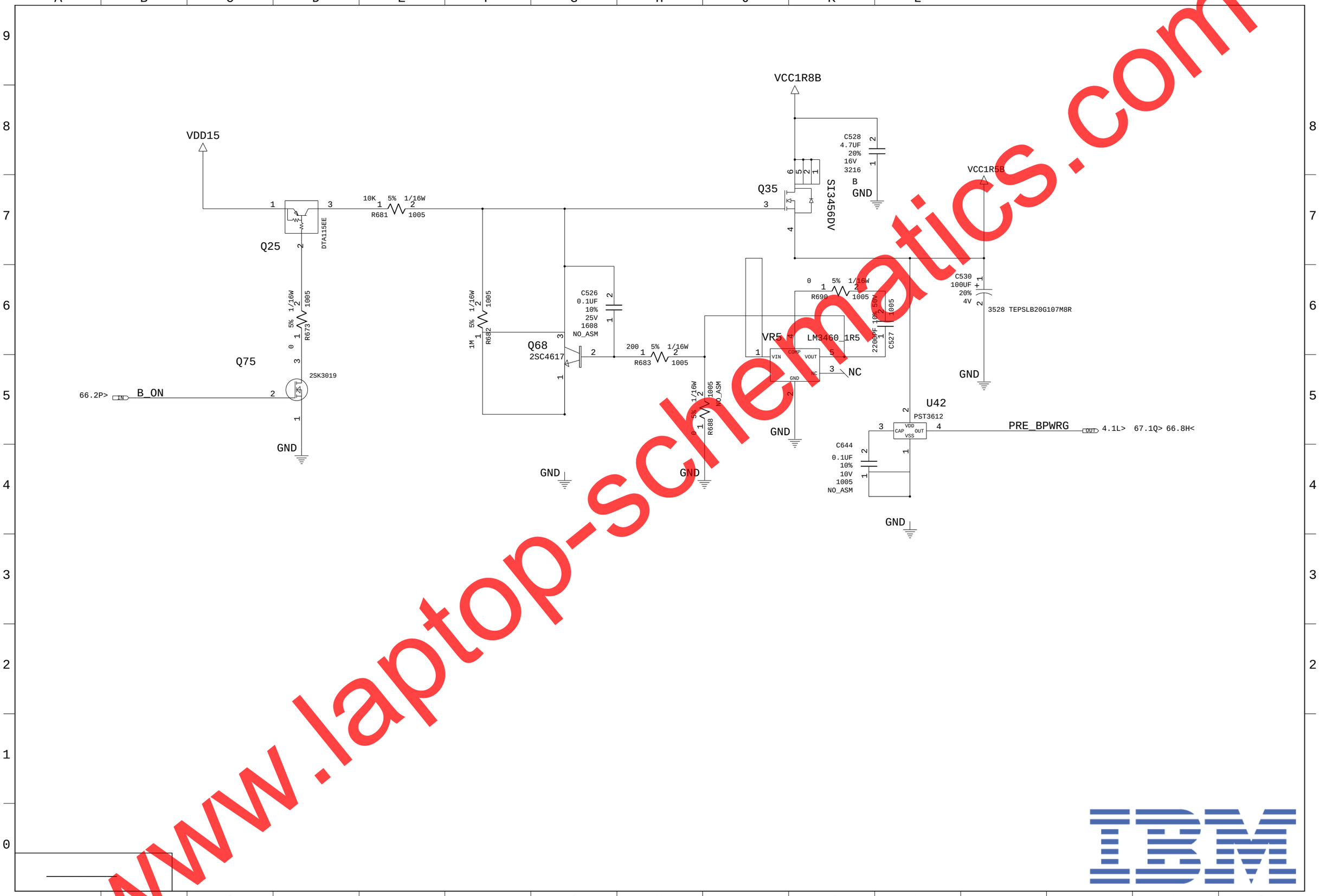

www.laptop-schematics.com

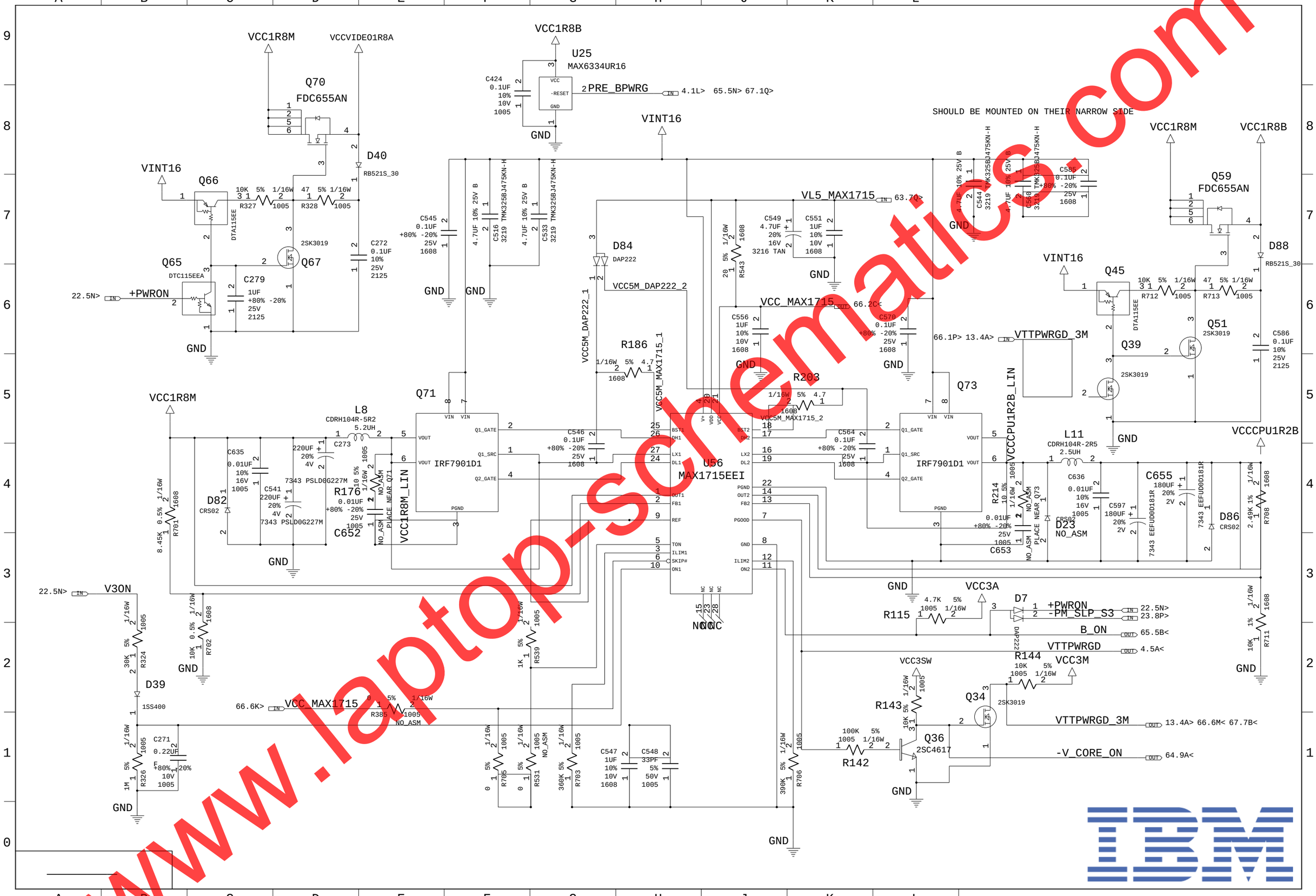

www.laptop-schematics.com

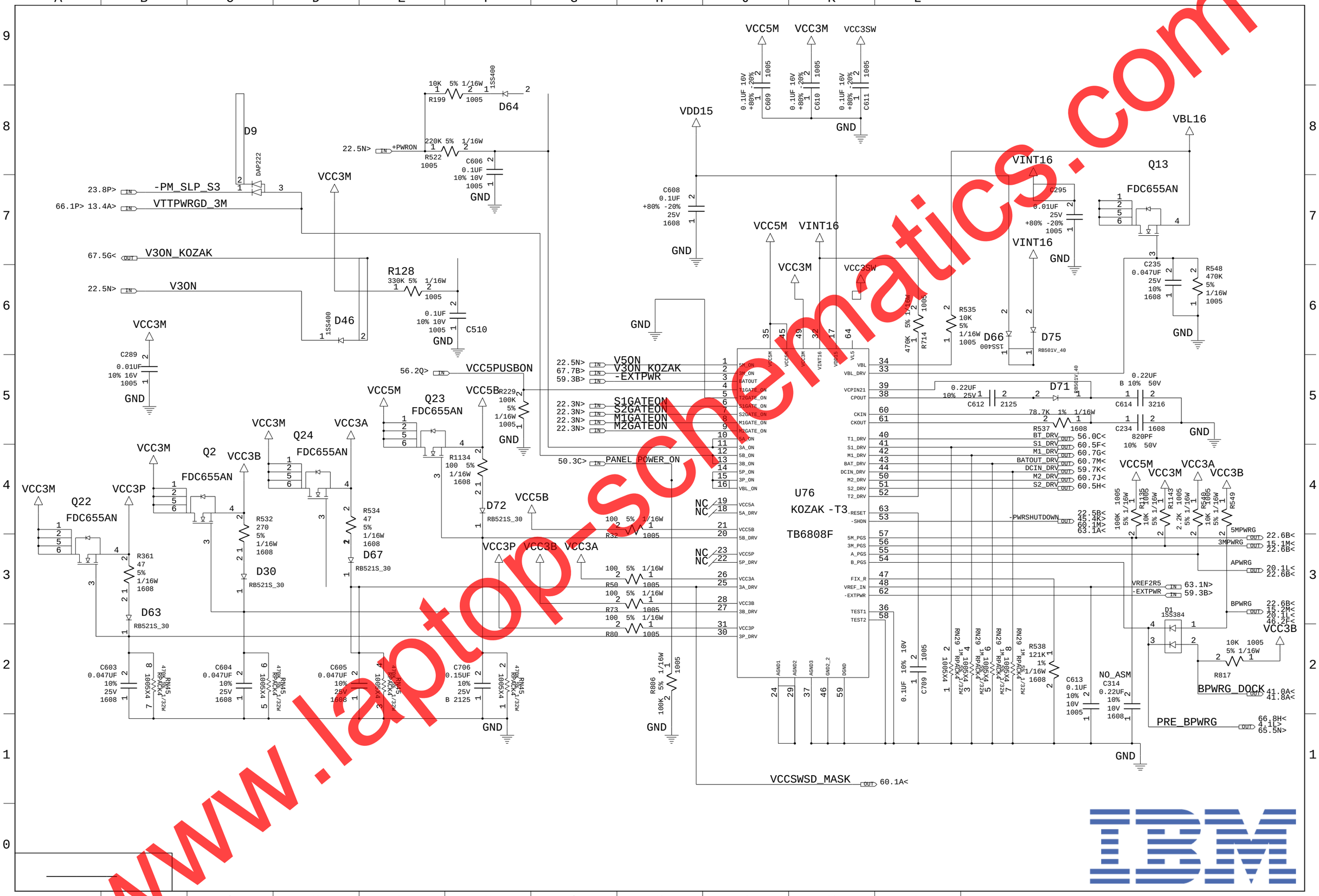

www.laptop-schematics.com

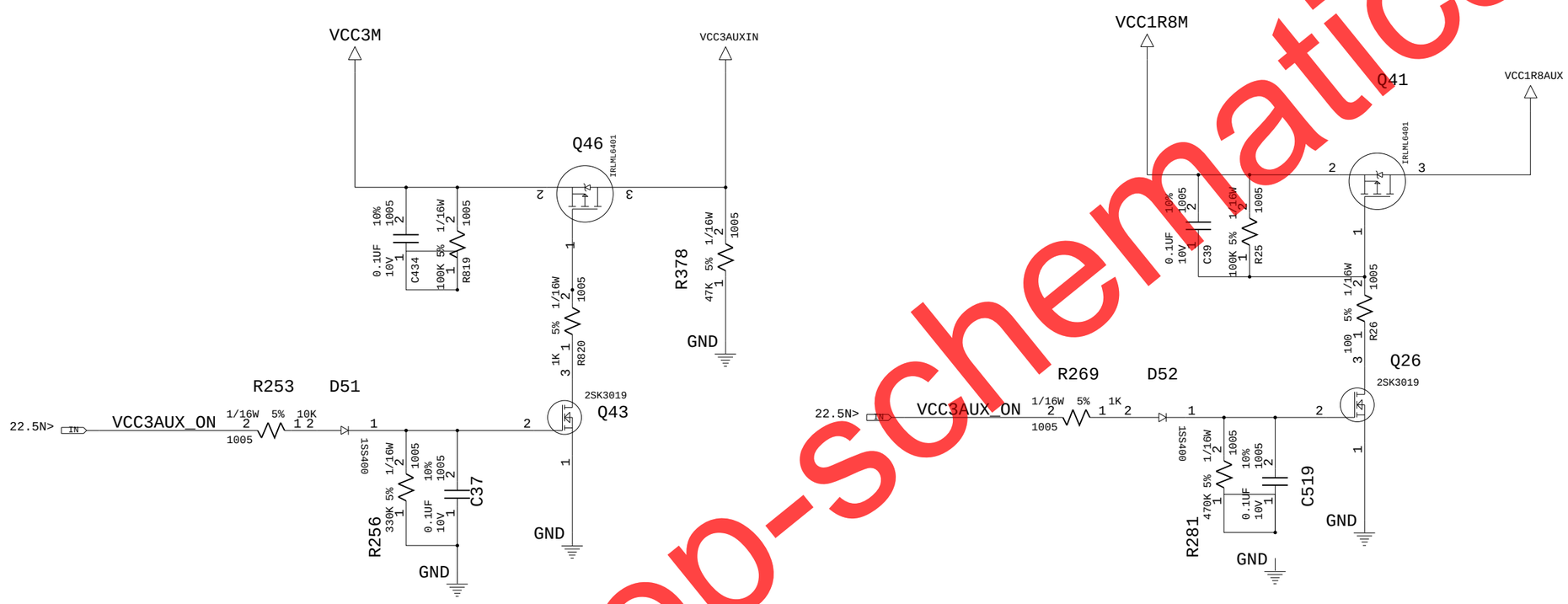

www.laptop-schematics.com

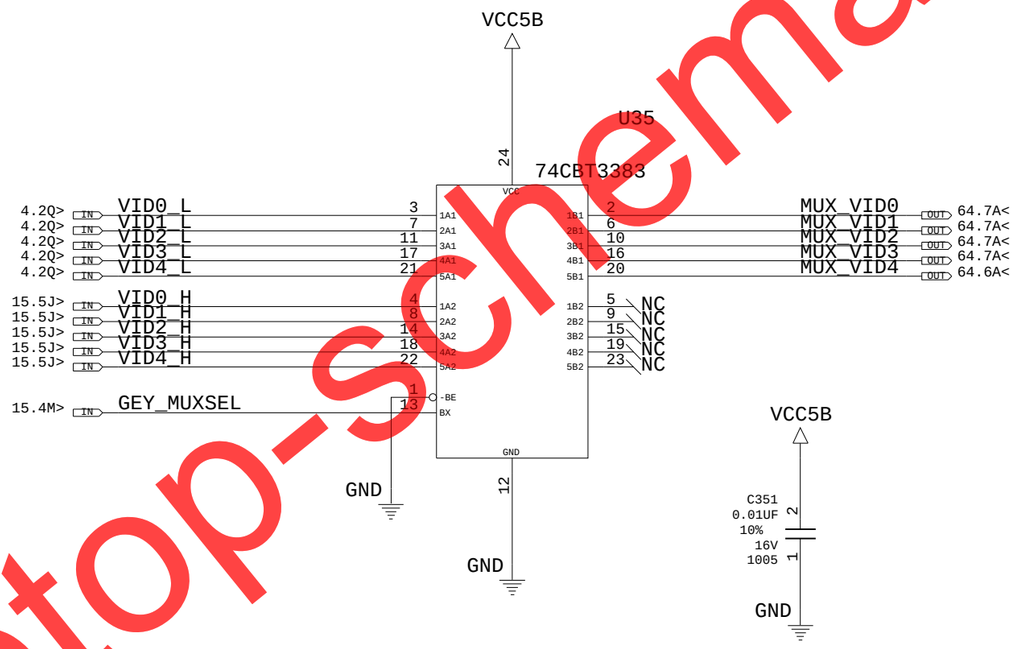

www.laptop-schematics.com