Compal confidential

Schematics Document

Mobile Yonah uFCPGA with Intel Calistoga_GM/PM+ICH7-M core logic

2005-12-15

REV:1.0

Security Classification	Compal Secret Data		
Issued Date	2005/03/10	Deciphered Date	2006/03/10

THIS SHEET OF ENGINEERING DRAWING IS THE PROPRIETARY PROPERTY OF COMPAL ELECTRONICS, INC. AND CONTAINS CONFIDENTIAL AND TRADE SECRET INFORMATION. THIS SHEET MAY NOT BE TRANSFERED FROM THE CUSTODY OF THE COMPETENT DIVISION OF R&D DEPARTMENT EXCEPT AS AUTHORIZED BY COMPAL ELECTRONICS, INC. NEITHER THIS SHEET NOR THE INFORMATION IT CONTAINS MAY BE USED BY OR DISCLOSED TO ANY THIRD PARTY WITHOUT PRIOR WRITTEN CONSENT OF COMPAL ELECTRONICS, INC.

Compal Electronics, Inc.

Title: *Cover Sheet*

Size: Custom | Document Number: *LA-2841* | Rev: 1.0

Date: Thursday, December 15, 2005 | Sheet 1 of 60

Compal confidential

File Name : LA-2841

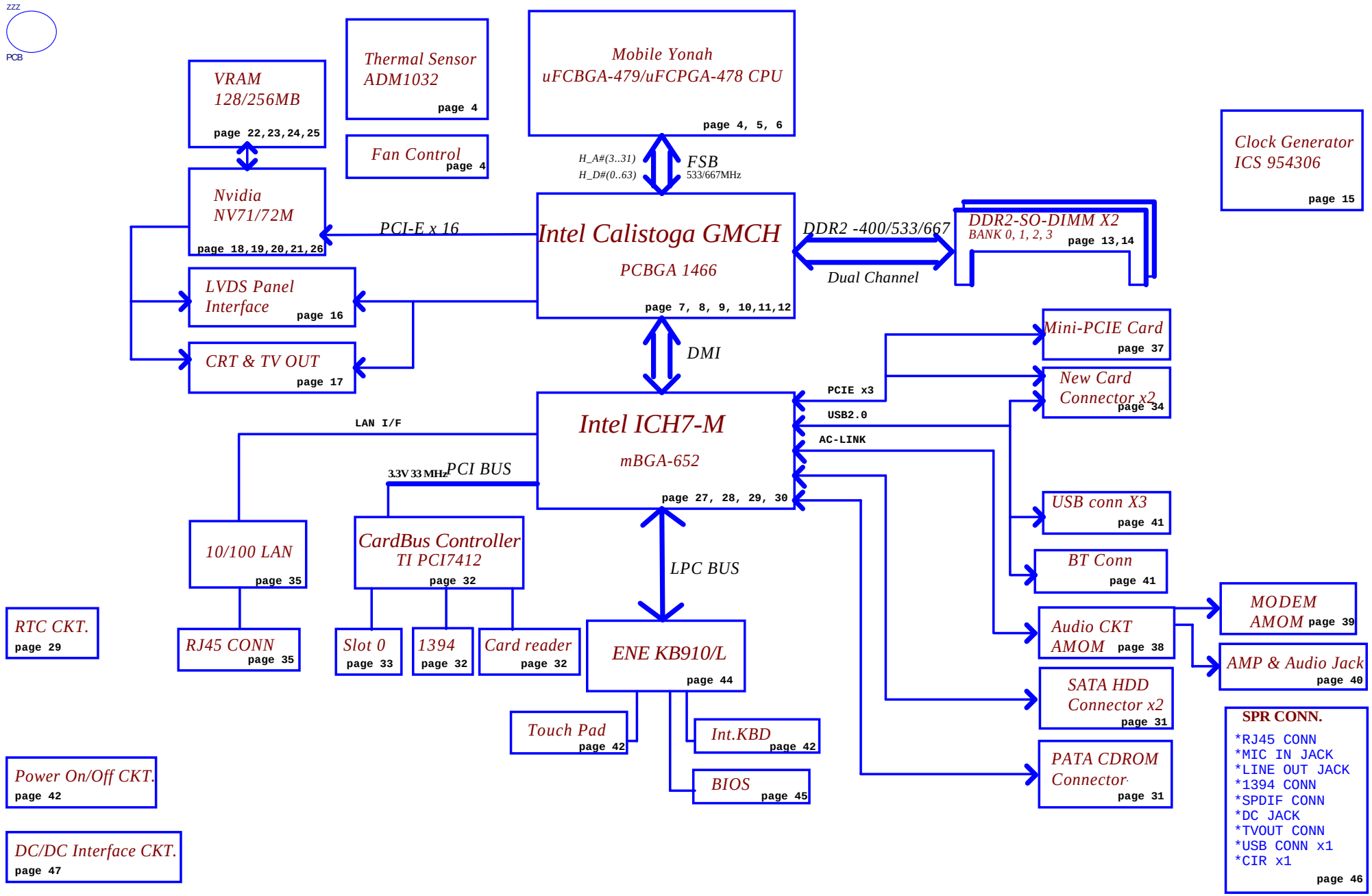

Security Classification	Compal Secret Data		
Issued Date	2005/03/10	Deciphered Date	2006/03/10

THIS SHEET OF ENGINEERING DRAWING IS THE PROPRIETARY PROPERTY OF COMPAL ELECTRONICS, INC. AND CONTAINS CONFIDENTIAL AND TRADE SECRET INFORMATION. THIS SHEET MAY NOT BE TRANSFERED FROM THE CUSTODY OF THE COMPETENT DIVISION OF R&D DEPARTMENT EXCEPT AS AUTHORIZED BY COMPAL ELECTRONICS, INC. NEITHER THIS SHEET NOR THE INFORMATION IT CONTAINS MAY BE USED BY OR DISCLOSED TO ANY THIRD PARTY WITHOUT PRIOR WRITTEN CONSENT OF COMPAL ELECTRONICS, INC.

Compal Electronics, Inc.

Title: **Block Diagram**

Size: Custom | Document Number: *LA-2841* | Rev: 1.0

Date: Thursday, December 15, 2005 | Sheet 2 of 60

Voltage Rails

power plane / State	+B LDO3 LDO5	+5VALW +3VALW	+1.8V +5V	+5VS +3VS +2.5VS +1.8VS +1.5VS +1.2VS +VGA_CORE +0.9VS +CPU_CORE +VCCP
S0	O	O	O	O
S1	O	O	O	O
S3	O	O	O	X
S5 S4/AC	O	O	X	X
S5 S4/ Battery only	O	X	X	X
S5 S4/AC & Battery don't exist	X	X	X	X

O MEANS ON
X MEANS OFF

PCI Devices

EXTERNAL	IDSEL#	REQ/GNT#	PIRQ
CARD BUS & 1394	AD22	2	C,D,E,G

Load BOM check item

1.U31 GM/PM/GML part number
2.U6 ICH7 part number
3.VRAM part number and Page26 RAM_CFG[0:3]/PCI_DEVID[0:3] modify check
4.For NV73 R510/R75/R533/R168 change to 499ohm
5.U33 NV7x part number

THIS SHEET OF ENGINEERING DRAWING IS THE PROPRIETARY PROPERTY OF COMPAL ELECTRONICS, INC. AND CONTAINS CONFIDENTIAL AND TRADE SECRET INFORMATION. THIS SHEET MAY NOT BE TRANSFERED FROM THE CUSTODY OF THE COMPETENT DIVISION OF R&D DEPARTMENT EXCEPT AS AUTHORIZED BY COMPAL ELECTRONICS, INC. NEITHER THIS SHEET NOR THE INFORMATION IT CONTAINS MAY BE USED BY OR DISCLOSED TO ANY THIRD PARTY WITHOUT PRIOR WRITTEN CONSENT OF COMPAL ELECTRONICS, INC.

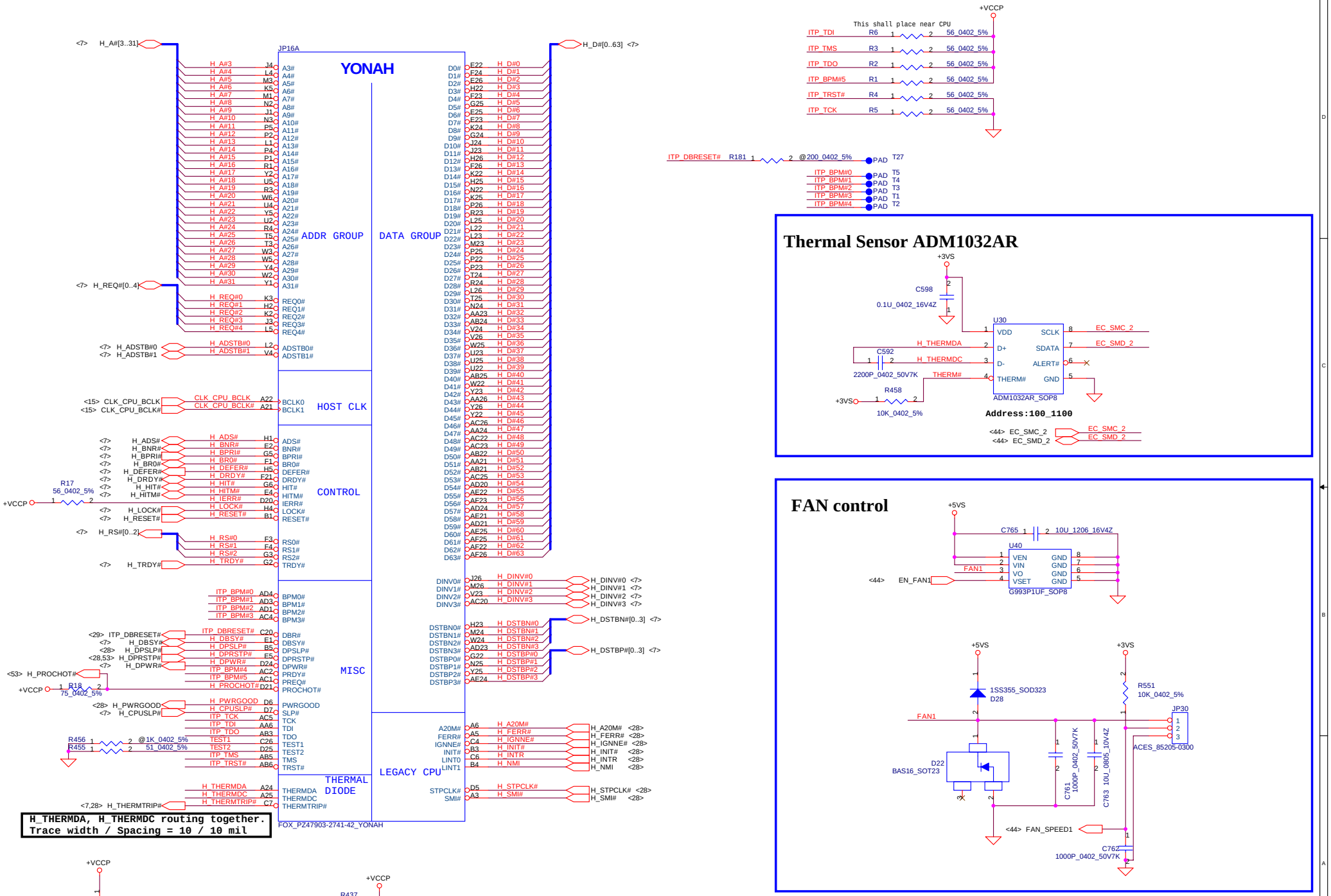

Security Classification	Compal Secret Data		
Issued Date	2005/03/10	Deciphered Date	2006/03/10

THIS SHEET OF ENGINEERING DRAWING IS THE PROPRIETARY PROPERTY OF COMPAL ELECTRONICS, INC. AND CONTAINS CONFIDENTIAL AND TRADE SECRET INFORMATION. THIS SHEET MAY NOT BE TRANSFERED FROM THE CUSTODY OF THE COMPETENT DIVISION OF R&D DEPARTMENT EXCEPT AS AUTHORIZED BY COMPAL ELECTRONICS, INC. NEITHER THIS SHEET NOR THE INFORMATION IT CONTAINS MAY BE USED BY OR DISCLOSED TO ANY THIRD PARTY WITHOUT PRIOR WRITTEN CONSENT OF COMPAL ELECTRONICS, INC.

Compal Electronics, Inc.

Title: **Yonah CPU in mFCPGA479**

Size: Custom | Document Number: LA-2841 | Rev: 1.0

Date: Thursday, December 15, 2005 | Sheet 4 of 60

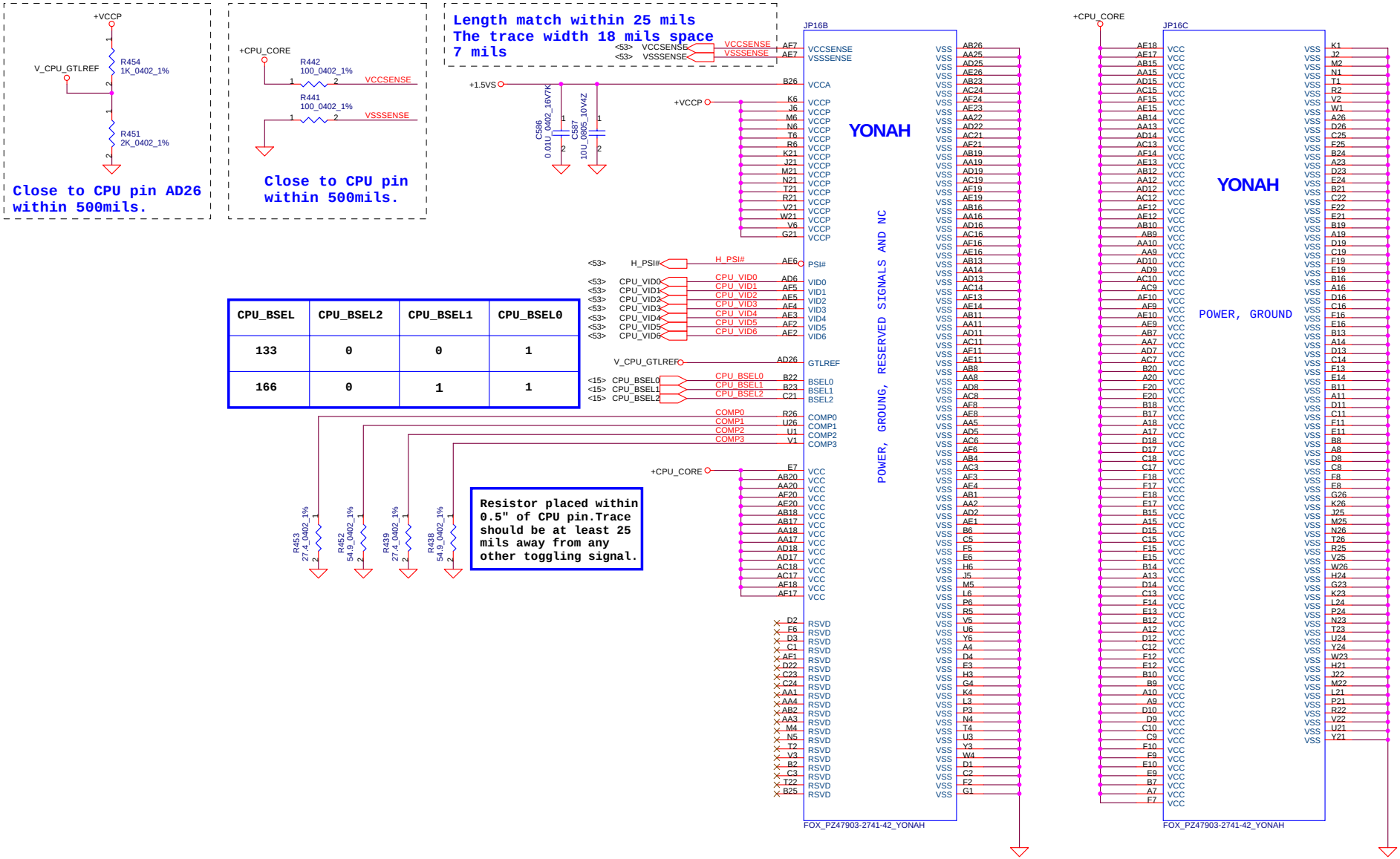

CPU_BSEL	CPU_BSEL2	CPU_BSEL1	CPU_BSEL0
133	0	0	1
166	0	1	1

Security Classification	Compal Secret Data		
Issued Date	2005/03/10	Deciphered Date	2006/03/10

THIS SHEET OF ENGINEERING DRAWING IS THE PROPRIETARY PROPERTY OF COMPAL ELECTRONICS, INC. AND CONTAINS CONFIDENTIAL AND TRADE SECRET INFORMATION. THIS SHEET MAY NOT BE TRANSFERED FROM THE CUSTODY OF THE COMPETENT DIVISION OF R&D DEPARTMENT EXCEPT AS AUTHORIZED BY COMPAL ELECTRONICS, INC. NEITHER THIS SHEET NOR THE INFORMATION IT CONTAINS MAY BE USED BY OR DISCLOSED TO ANY THIRD PARTY WITHOUT PRIOR WRITTEN CONSENT OF COMPAL ELECTRONICS, INC.

Compal Electronics, Inc.

Title: **Yonah CPU in mFCPGA479**

Size: Custom | Document Number: LA-2841 | Rev: 1.0

Date: Thursday, December 15, 2005 | Sheet 5 of 60

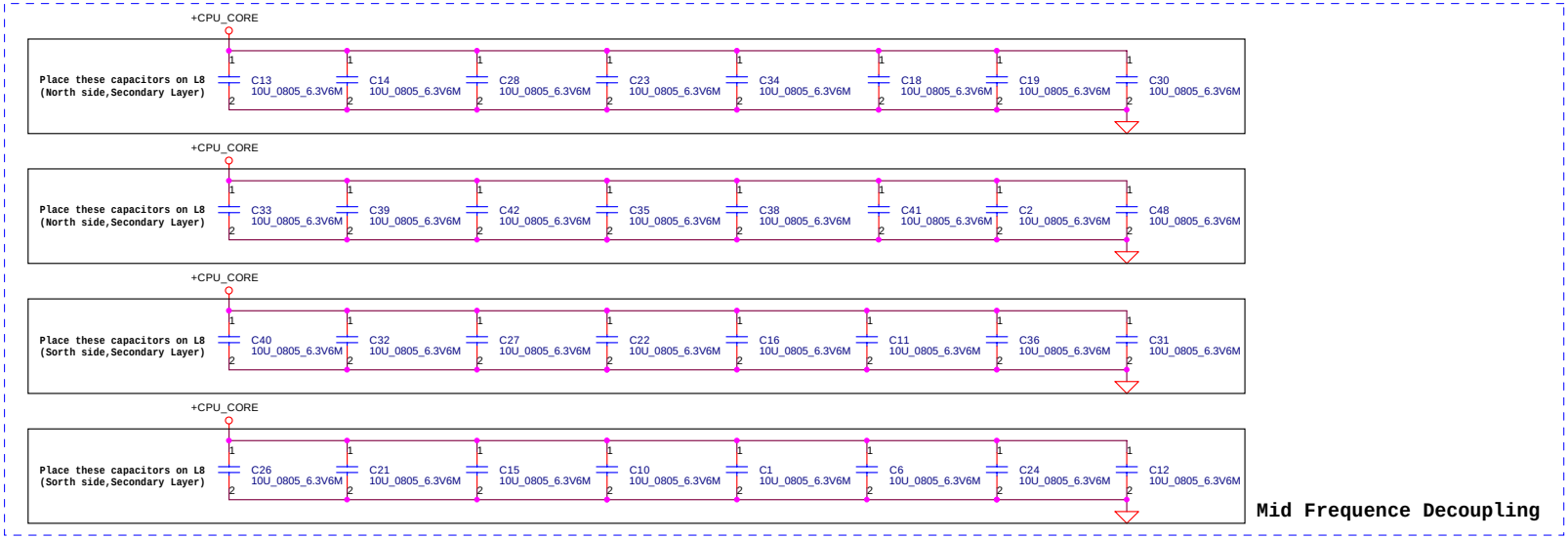

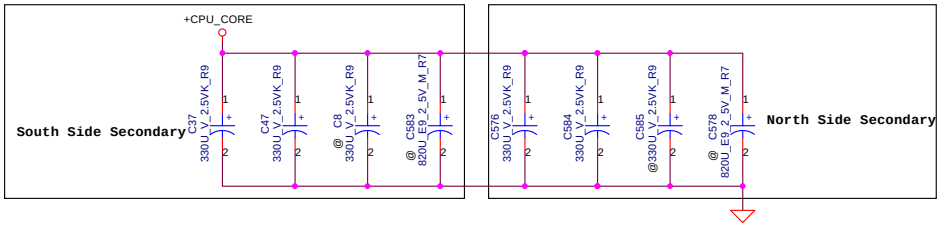

ESR <= 1.5m ohm
Capacitor > 1980uF

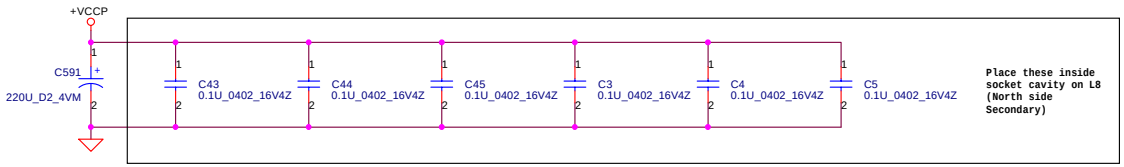

Security Classification	Compal Secret Data		
Issued Date	2005/03/10	Deciphered Date	2006/03/10

THIS SHEET OF ENGINEERING DRAWING IS THE PROPRIETARY PROPERTY OF COMPAL ELECTRONICS, INC. AND CONTAINS CONFIDENTIAL AND TRADE SECRET INFORMATION. THIS SHEET MAY NOT BE TRANSFERED FROM THE CUSTODY OF THE COMPETENT DIVISION OF R&D DEPARTMENT EXCEPT AS AUTHORIZED BY COMPAL ELECTRONICS, INC. NEITHER THIS SHEET NOR THE INFORMATION IT CONTAINS MAY BE USED BY OR DISCLOSED TO ANY THIRD PARTY WITHOUT PRIOR WRITTEN CONSENT OF COMPAL ELECTRONICS, INC.

Compal Electronics, Inc.

Title: **CPU Bypass capacitors**

Size: Custom | Document Number: LA-2841 | Rev: 1.0

Date: Thursday, December 15, 2005 | Sheet 6 of 60

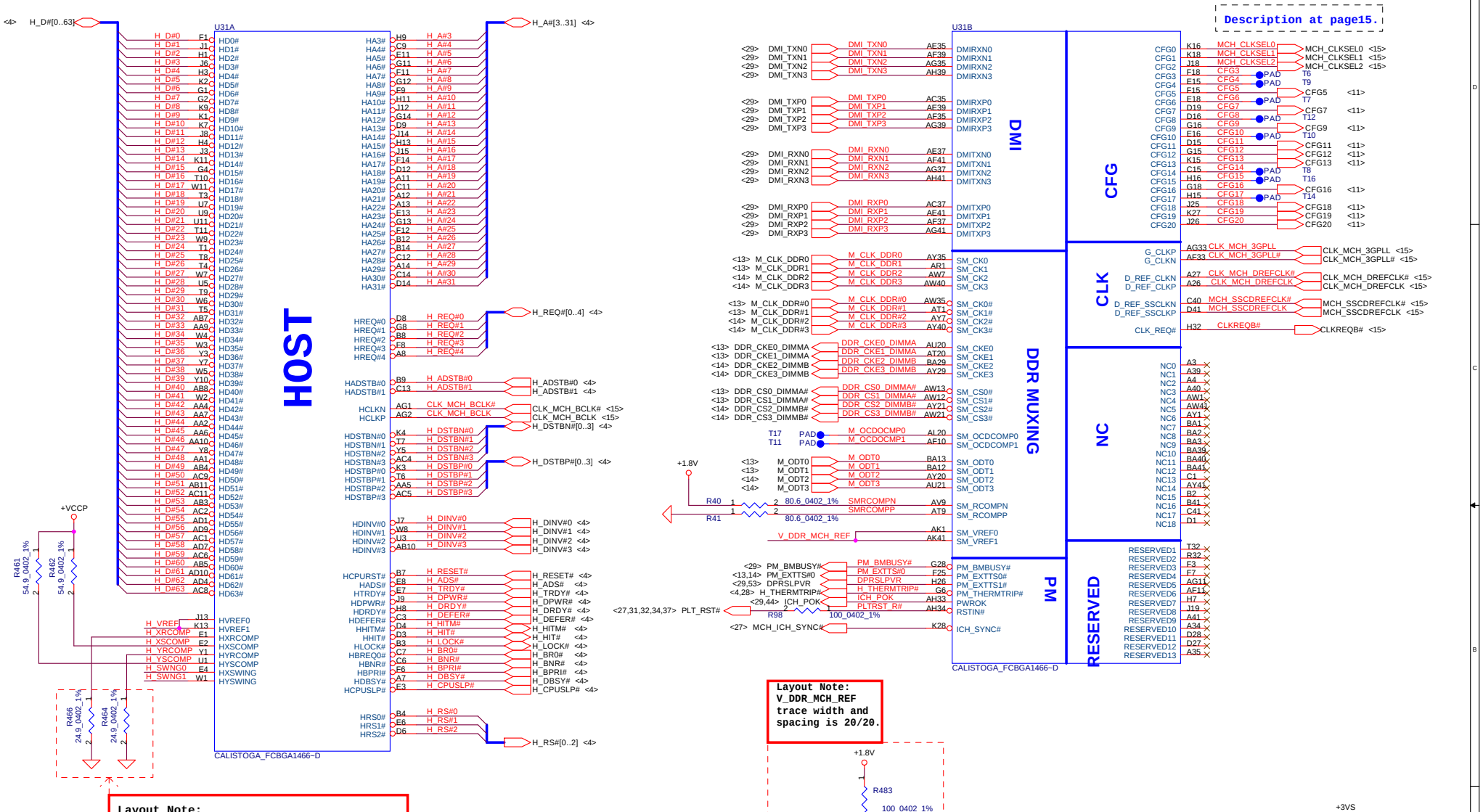

Security Classification	Compal Secret Data		
Issued Date	2005/03/10	Deciphered Date	2006/03/10

THIS SHEET OF ENGINEERING DRAWING IS THE PROPRIETARY PROPERTY OF COMPAL ELECTRONICS, INC. AND CONTAINS CONFIDENTIAL AND TRADE SECRET INFORMATION. THIS SHEET MAY NOT BE TRANSFERED FROM THE CUSTODY OF THE COMPETENT DIVISION OF R&D DEPARTMENT EXCEPT AS AUTHORIZED BY COMPAL ELECTRONICS, INC. NEITHER THIS SHEET NOR THE INFORMATION IT CONTAINS MAY BE USED BY OR DISCLOSED TO ANY THIRD PARTY WITHOUT PRIOR WRITTEN CONSENT OF COMPAL ELECTRONICS, INC.

Compal Electronics, Inc.

Title: **Calistoga (1/6)**

Size	Document Number	Rev
Custom	LA-2841	1.0

Date: Friday, December 16, 2005 | Sheet 7 of 60

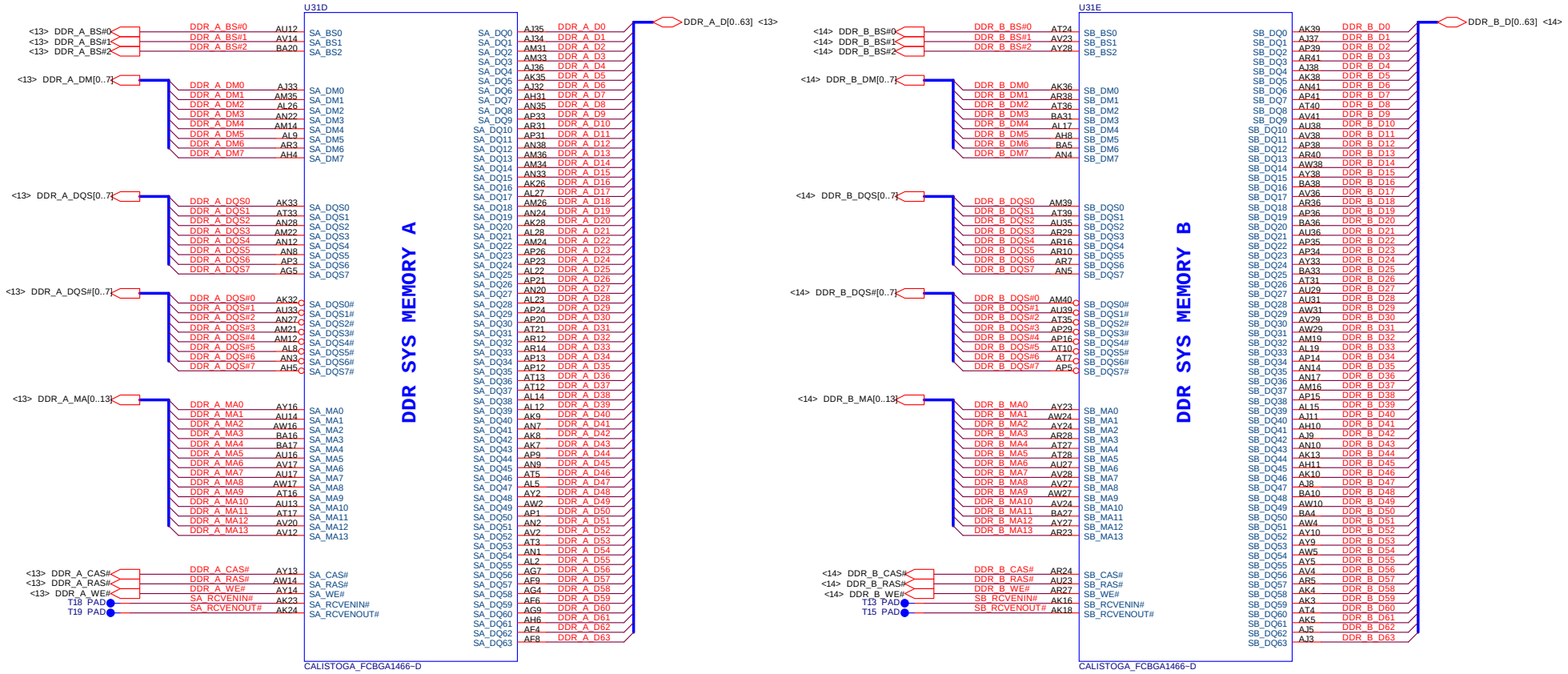

Security Classification	Compal Secret Data		
Issued Date	2005/03/10	Deciphered Date	2006/03/10

THIS SHEET OF ENGINEERING DRAWING IS THE PROPRIETARY PROPERTY OF COMPAL ELECTRONICS, INC. AND CONTAINS CONFIDENTIAL AND TRADE SECRET INFORMATION. THIS SHEET MAY NOT BE TRANSFERED FROM THE CUSTODY OF THE COMPETENT DIVISION OF R&D DEPARTMENT EXCEPT AS AUTHORIZED BY COMPAL ELECTRONICS, INC. NEITHER THIS SHEET NOR THE INFORMATION IT CONTAINS MAY BE USED BY OR DISCLOSED TO ANY THIRD PARTY WITHOUT PRIOR WRITTEN CONSENT OF COMPAL ELECTRONICS, INC.

Compal Electronics, Inc.

Title: **Calistoga (2/6)**

Size: Custom | Document Number: *LA-2841* | Rev: 1.0

Date: Friday, December 16, 2005 | Sheet 8 of 60

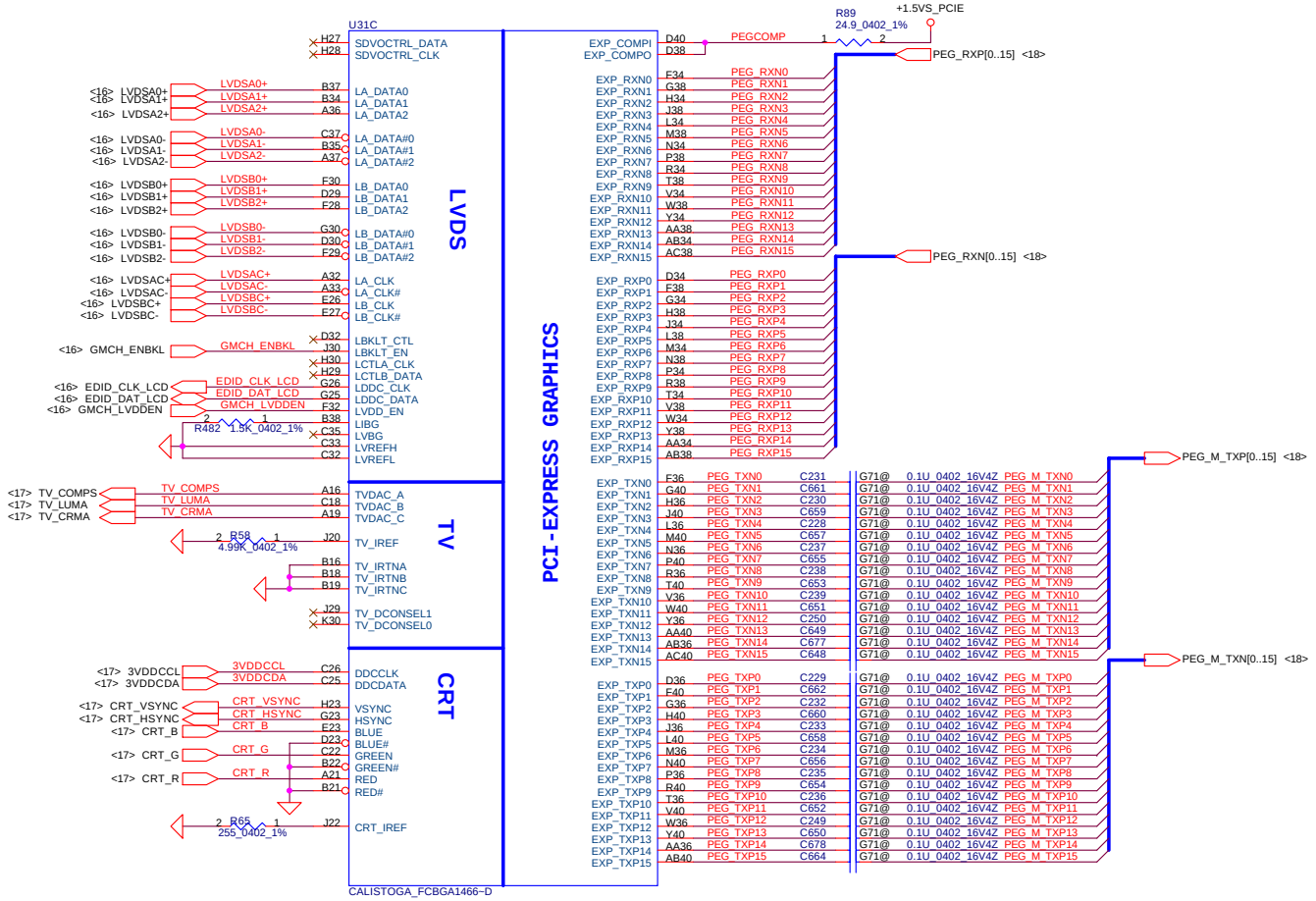

Security Classification	Compal Secret Data		
Issued Date	2005/03/10	Deciphered Date	2006/03/10

THIS SHEET OF ENGINEERING DRAWING IS THE PROPRIETARY PROPERTY OF COMPAL ELECTRONICS, INC. AND CONTAINS CONFIDENTIAL AND TRADE SECRET INFORMATION. THIS SHEET MAY NOT BE TRANSFERED FROM THE CUSTODY OF THE COMPETENT DIVISION OF R&D DEPARTMENT EXCEPT AS AUTHORIZED BY COMPAL ELECTRONICS, INC. NEITHER THIS SHEET NOR THE INFORMATION IT CONTAINS MAY BE USED BY OR DISCLOSED TO ANY THIRD PARTY WITHOUT PRIOR WRITTEN CONSENT OF COMPAL ELECTRONICS, INC.

Compal Electronics, Inc.

Title: **Calistoga (3/6)**

Size: Custom | Document Number: *LA-2841* | Rev: 1.0

Date: Friday, December 16, 2005 | Sheet 9 of 60

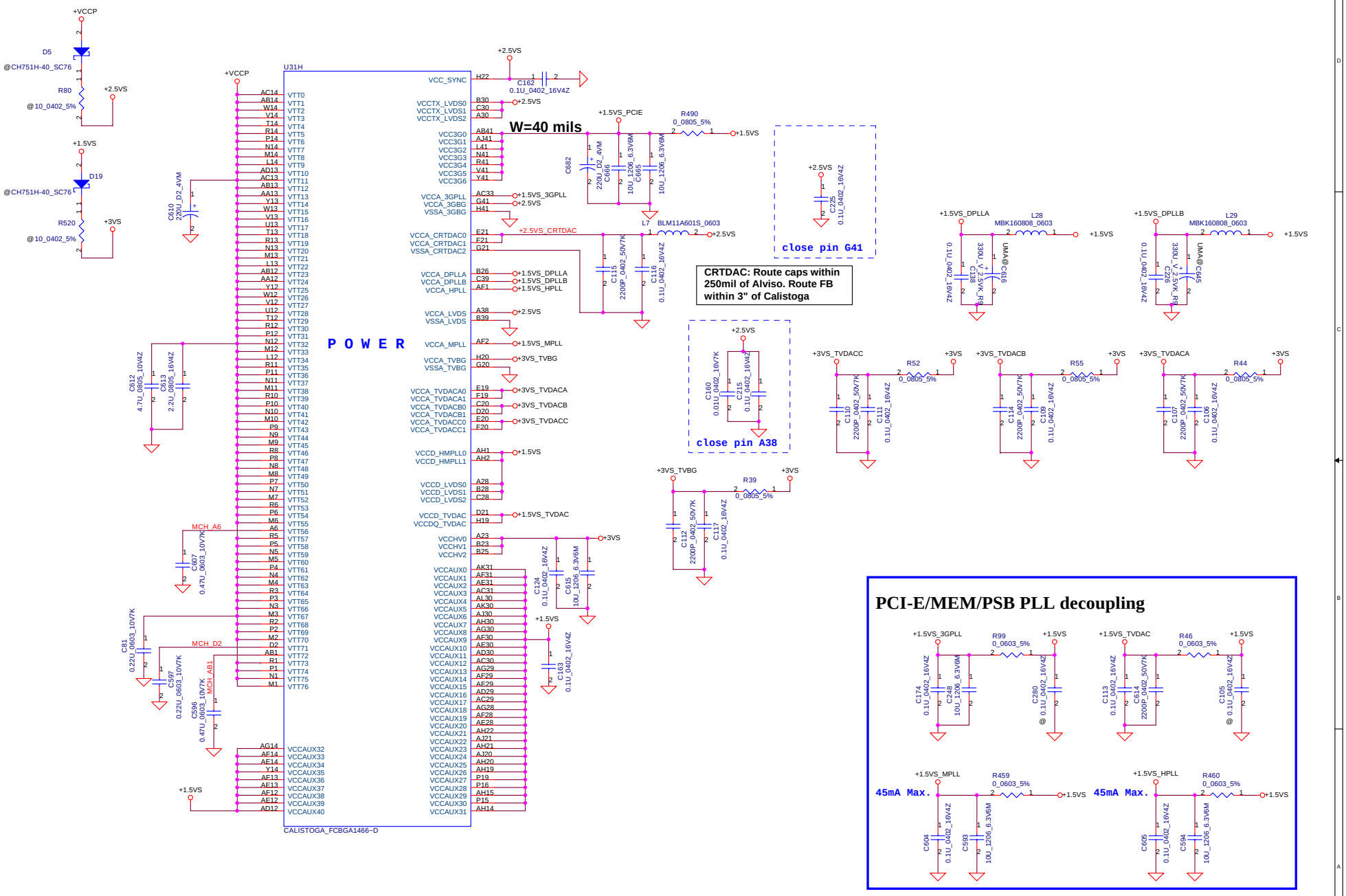

Security Classification	Compal Secret Data		
Issued Date	2005/03/10	Deciphered Date	2006/03/10

THIS SHEET OF ENGINEERING DRAWING IS THE PROPRIETARY PROPERTY OF COMPAL ELECTRONICS, INC. AND CONTAINS CONFIDENTIAL AND TRADE SECRET INFORMATION. THIS SHEET MAY NOT BE TRANSFERED FROM THE CUSTODY OF THE COMPETENT DIVISION OF R&D DEPARTMENT EXCEPT AS AUTHORIZED BY COMPAL ELECTRONICS, INC. NEITHER THIS SHEET NOR THE INFORMATION IT CONTAINS MAY BE USED BY OR DISCLOSED TO ANY THIRD PARTY WITHOUT PRIOR WRITTEN CONSENT OF COMPAL ELECTRONICS, INC.

Compal Electronics, Inc.

Title: **Calistoga (4/6)**

Size: Custom | Document Number: **LA-2841** | Rev: 1.0

Date: Friday, December 16, 2005 | Sheet 10 of 60

Strap Pin Table

CFG[3:17] have internal pull up

CFG[19:18] have internal pull down

CFG[2:0]	011 = 667MT/s FSB 001 = 533MT/s FSB
CFG5	0 = DMI x 2 1 = DMI x 4*(Default)
CFG7	0 = Reserved 1 = Mobile Yonah CPU*(Default)
CFG9	0 = Lane Reversal Enable 1 = Normal Operation (Default)*
CFG6 PSB 4X CLK Enable	0 = Reserved 1 = Calistoga *
CFG[13:12]	00 = Reserved 01 = XOR Mode Enabled 10 = All Z Mode Enabled 11 = Normal Operation *(Default)
CFG16	0 = Dynamic ODT Disabled 1 = Dynamic ODT Enabled *(Default)
CFG10 CFG18	10 = 1.05V*(Default) 01 = 1.5V
CFG19	0 = Normal Operation * (Default) 1 = DMI Lane Reversal Enable
SDVO_CTRLDATA	0 = No SDVO Device Present * (Default) 1 = SDVO Device Present
CFG20 (PCIE/SDVO select)	0 = Only PCIE or SDVO is operational. *(Default) 1 = PCIE/SDVO are operating simu.

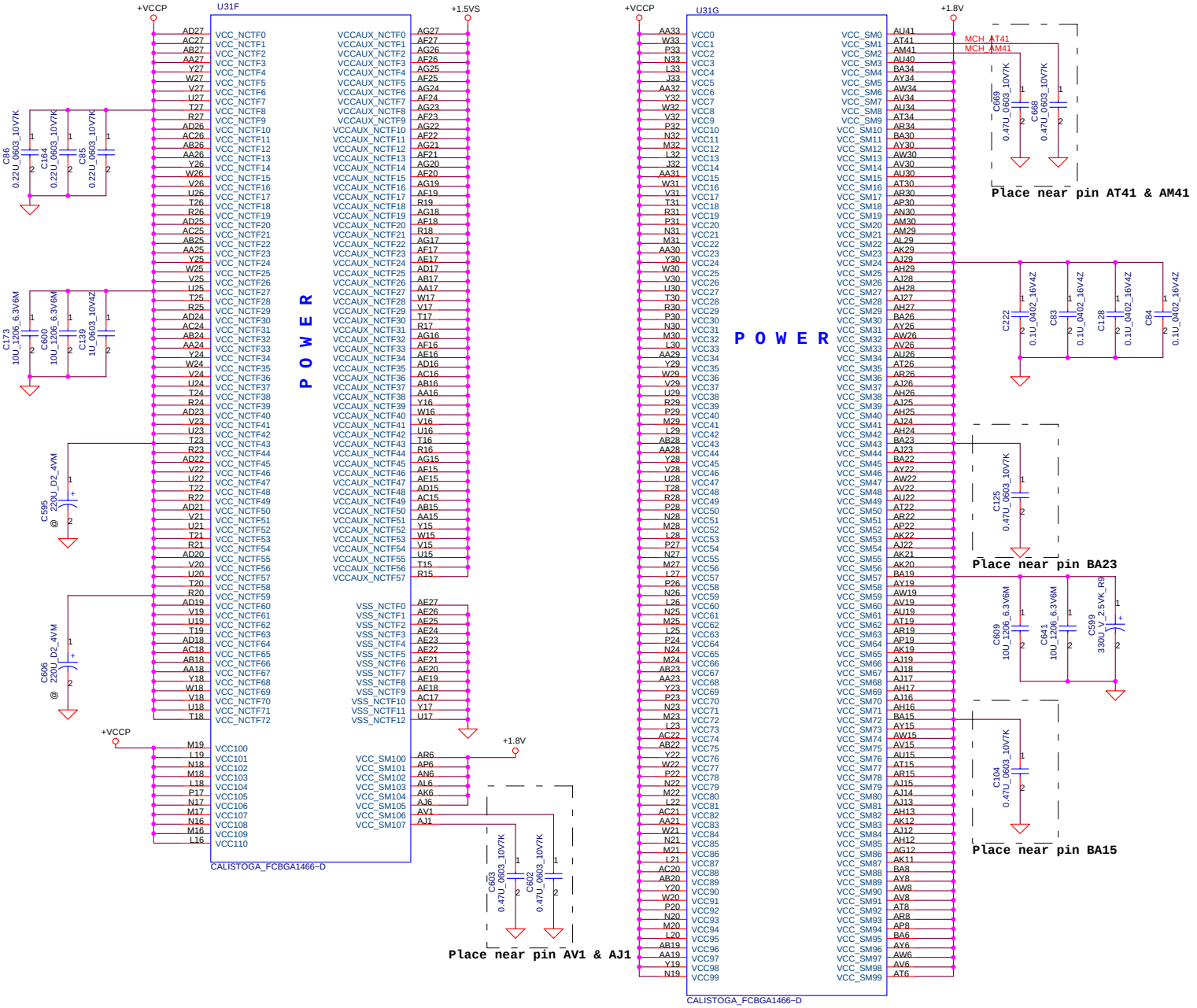

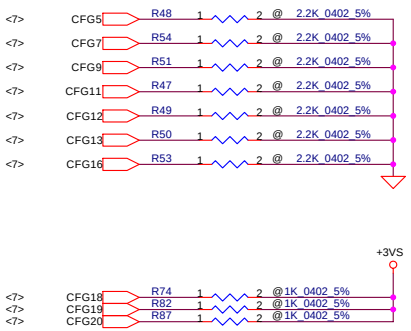

Security Classification	Compal Secret Data		
Issued Date	2005/03/10	Deciphered Date	2006/03/10

THIS SHEET OF ENGINEERING DRAWING IS THE PROPRIETARY PROPERTY OF COMPAL ELECTRONICS, INC. AND CONTAINS CONFIDENTIAL AND TRADE SECRET INFORMATION. THIS SHEET MAY NOT BE TRANSFERED FROM THE CUSTODY OF THE COMPETENT DIVISION OF R&D DEPARTMENT EXCEPT AS AUTHORIZED BY COMPAL ELECTRONICS, INC. NEITHER THIS SHEET NOR THE INFORMATION IT CONTAINS MAY BE USED BY OR DISCLOSED TO ANY THIRD PARTY WITHOUT PRIOR WRITTEN CONSENT OF COMPAL ELECTRONICS, INC.

Compal Electronics, Inc.

Title: Calistoga (5/6)

Size: Custom | Document Number: LA-2841 | Rev: 1.0

Date: Friday, December 16, 2005 | Sheet 11 of 60

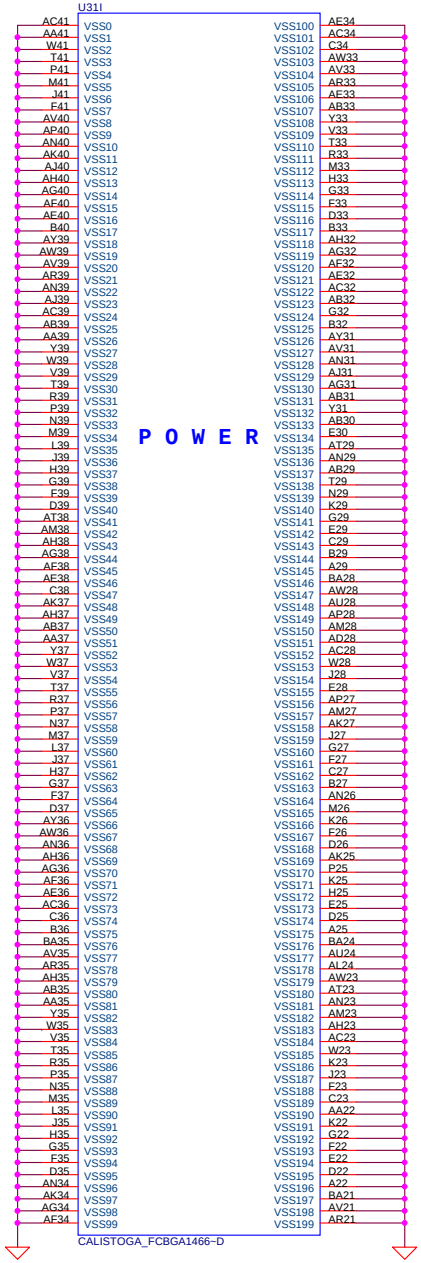

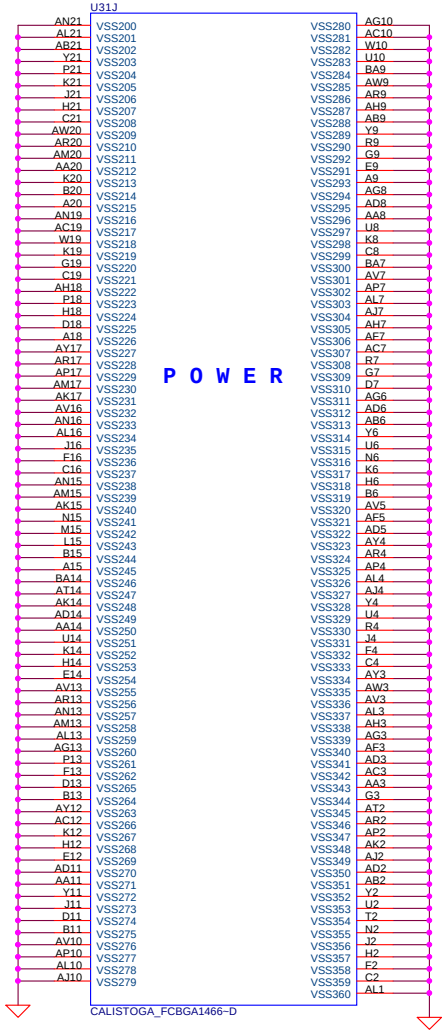

Security Classification	Compal Secret Data		
Issued Date	2005/03/10	Deciphered Date	2006/03/10

THIS SHEET OF ENGINEERING DRAWING IS THE PROPRIETARY PROPERTY OF COMPAL ELECTRONICS, INC. AND CONTAINS CONFIDENTIAL AND TRADE SECRET INFORMATION. THIS SHEET MAY NOT BE TRANSFERED FROM THE CUSTODY OF THE COMPETENT DIVISION OF R&D DEPARTMENT EXCEPT AS AUTHORIZED BY COMPAL ELECTRONICS, INC. NEITHER THIS SHEET NOR THE INFORMATION IT CONTAINS MAY BE USED BY OR DISCLOSED TO ANY THIRD PARTY WITHOUT PRIOR WRITTEN CONSENT OF COMPAL ELECTRONICS, INC.

Compal Electronics, Inc.

Title: **Calistoga (6/6)**

Size: Custom | Document Number: *LA-2841* | Rev: 1.0

Date: Friday, December 16, 2005 | Sheet 12 of 60

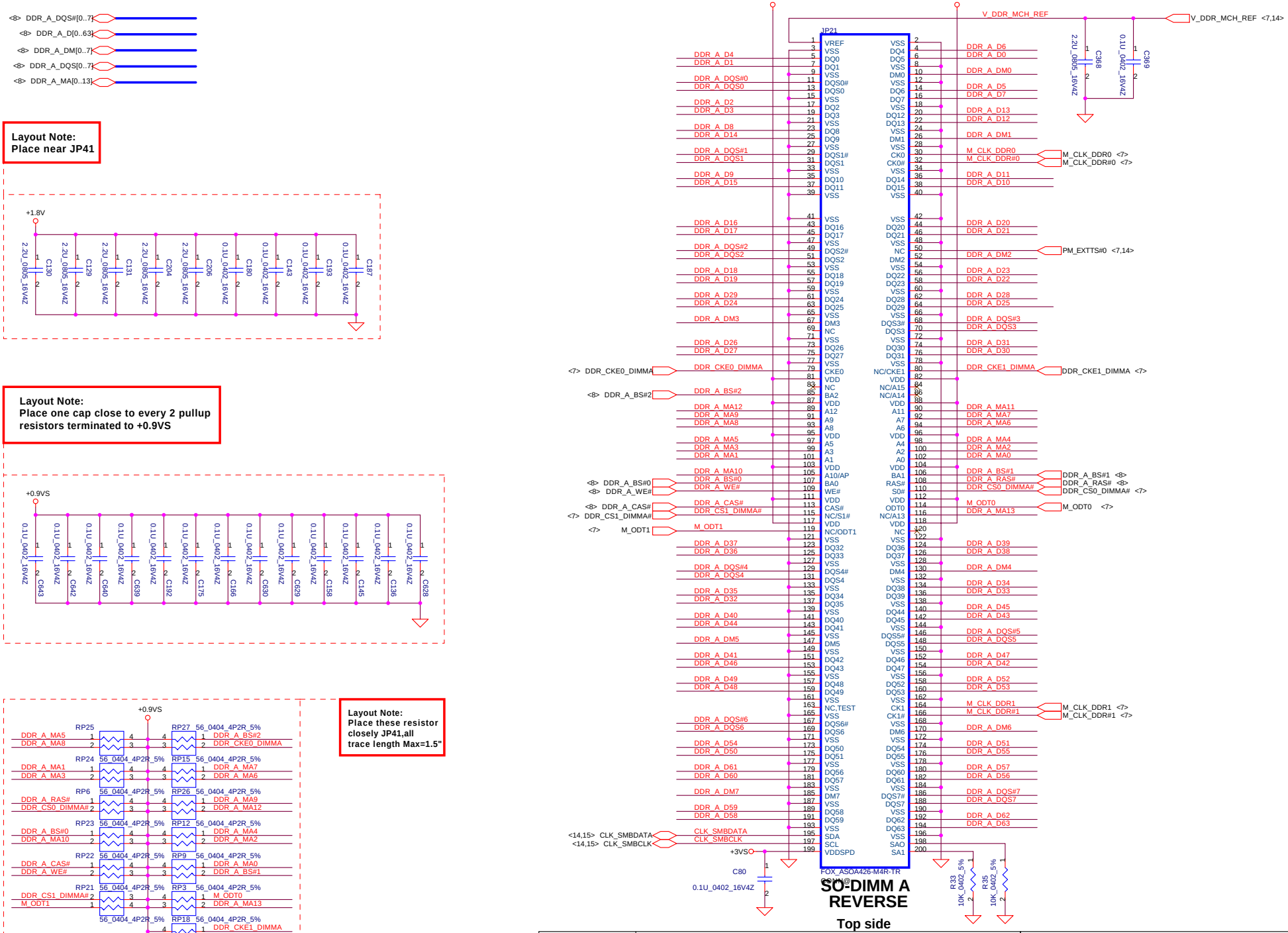

Security Classification	Compal Secret Data		
Issued Date	2005/03/10	Deciphered Date	2006/03/10

THIS SHEET OF ENGINEERING DRAWING IS THE PROPRIETARY PROPERTY OF COMPAL ELECTRONICS, INC. AND CONTAINS CONFIDENTIAL AND TRADE SECRET INFORMATION. THIS SHEET MAY NOT BE TRANSFERED FROM THE CUSTODY OF THE COMPETENT DIVISION OF R&D DEPARTMENT EXCEPT AS AUTHORIZED BY COMPAL ELECTRONICS, INC. NEITHER THIS SHEET NOR THE INFORMATION IT CONTAINS MAY BE USED BY OR DISCLOSED TO ANY THIRD PARTY WITHOUT PRIOR WRITTEN CONSENT OF COMPAL ELECTRONICS, INC.

Compal Electronics, Inc.

Title: **DDRII-SODIMM SLOT1**

Size: Custom | Document Number: LA-2841 | Rev: 1.0

Date: Thursday, December 15, 2005 | Sheet 13 of 60

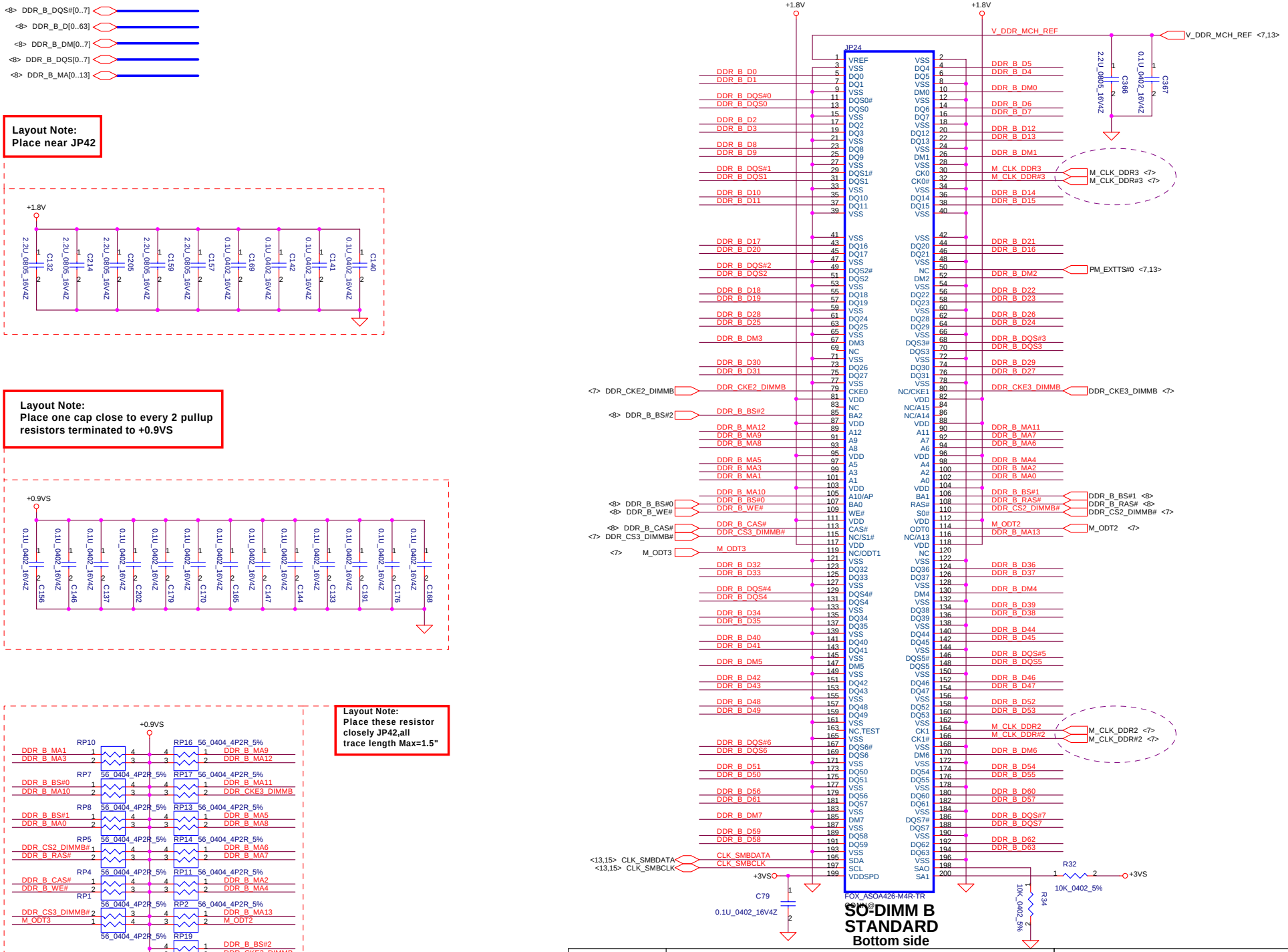

Security Classification	Compal Secret Data		
Issued Date	2005/03/10	Deciphered Date	2006/03/10

THIS SHEET OF ENGINEERING DRAWING IS THE PROPRIETARY PROPERTY OF COMPAL ELECTRONICS, INC. AND CONTAINS CONFIDENTIAL AND TRADE SECRET INFORMATION. THIS SHEET MAY NOT BE TRANSFERED FROM THE CUSTODY OF THE COMPETENT DIVISION OF R&D DEPARTMENT EXCEPT AS AUTHORIZED BY COMPAL ELECTRONICS, INC. NEITHER THIS SHEET NOR THE INFORMATION IT CONTAINS MAY BE USED BY OR DISCLOSED TO ANY THIRD PARTY WITHOUT PRIOR WRITTEN CONSENT OF COMPAL ELECTRONICS, INC.

Compal Electronics, Inc.

Title: **DDRII-SODIMM SLOT2**

Size: | Document Number: *LA-2841* | Rev: 1.0

Date: Thursday, December 15, 2005 | Sheet 14 of 60

FSLC CLKSEL2	FSLB CLKSEL1	FSLA CLKSEL0	CPU MHz	SRC MHz	PCI MHz
0	0	1	133	100	33.3
0	1	1	166	100	33.3

Table : ICS954306

FSB Frequency Selet:

CPU Driven *(Default)	Stuff	CLK_Ra CLK_Rb CLK_Rc
	No Stuff	CLK_Rd CLK_Re CLK_Rf
533MHz	Stuff	CLK_Rd CLK_Re CLK_Rf
	No Stuff	CLK_Ra CLK_Rb CLK_Rc
667MHz	Stuff	CLK_Rd CLK_Rf
	No Stuff	CLK_Ra CLK_Rb CLK_Rc CLK_Re

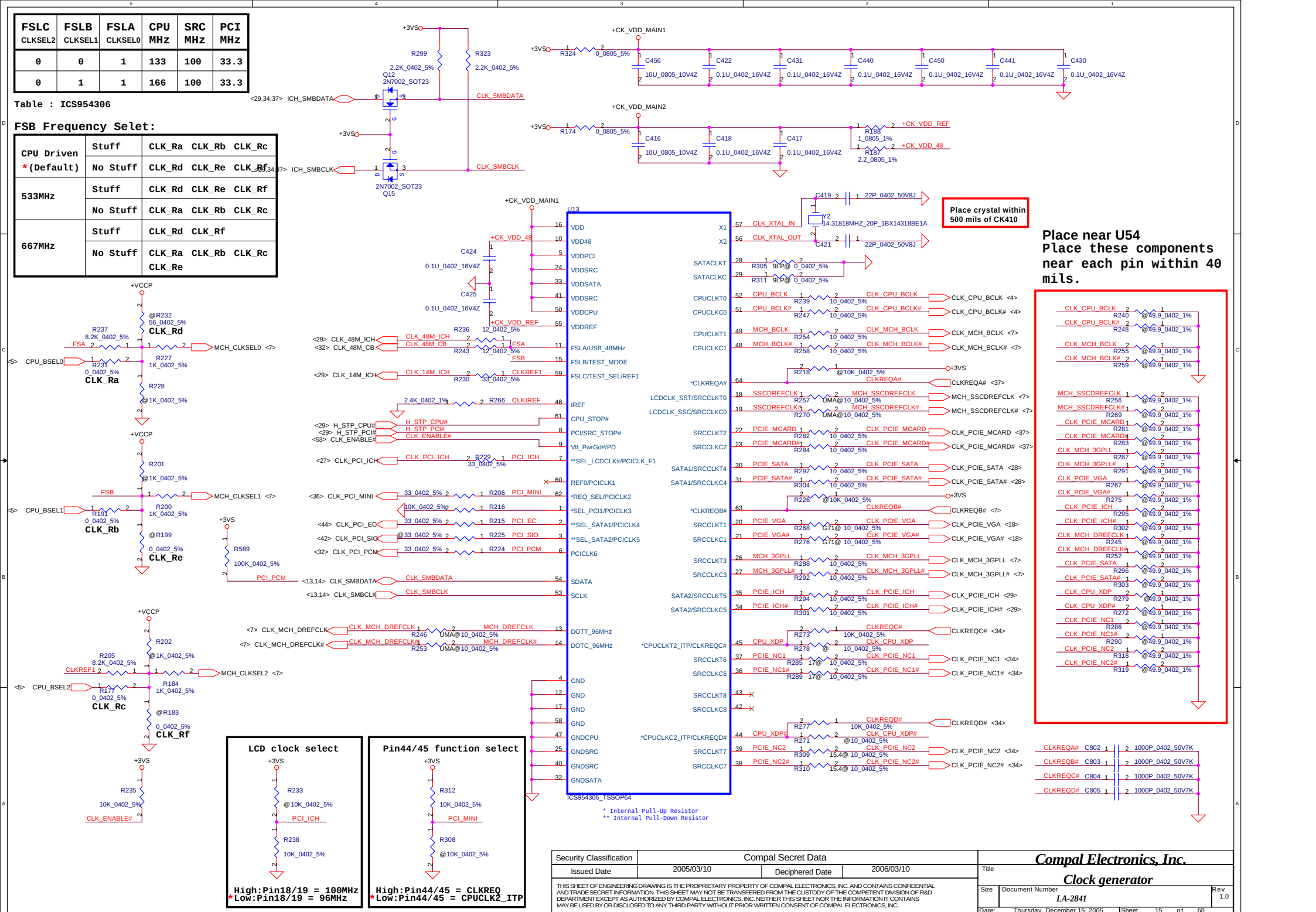

Security Classification	Compal Secret Data		
Issued Date	2005/03/10	Deciphered Date	2006/03/10

THIS SHEET OF ENGINEERING DRAWING IS THE PROPRIETARY PROPERTY OF COMPAL ELECTRONICS, INC. AND CONTAINS CONFIDENTIAL AND TRADE SECRET INFORMATION. THIS SHEET MAY NOT BE TRANSFERED FROM THE CUSTODY OF THE COMPETENT DIVISION OF R&D DEPARTMENT EXCEPT AS AUTHORIZED BY COMPAL ELECTRONICS, INC. NEITHER THIS SHEET NOR THE INFORMATION IT CONTAINS MAY BE USED BY OR DISCLOSED TO ANY THIRD PARTY WITHOUT PRIOR WRITTEN CONSENT OF COMPAL ELECTRONICS, INC.

Compal Electronics, Inc.

Title: Clock generator

Size | Document Number: LA-2841 | Rev 1.0

Date: Thursday, December 15, 2005 | Sheet 15 of 60

LCD Panel & inverter Connector

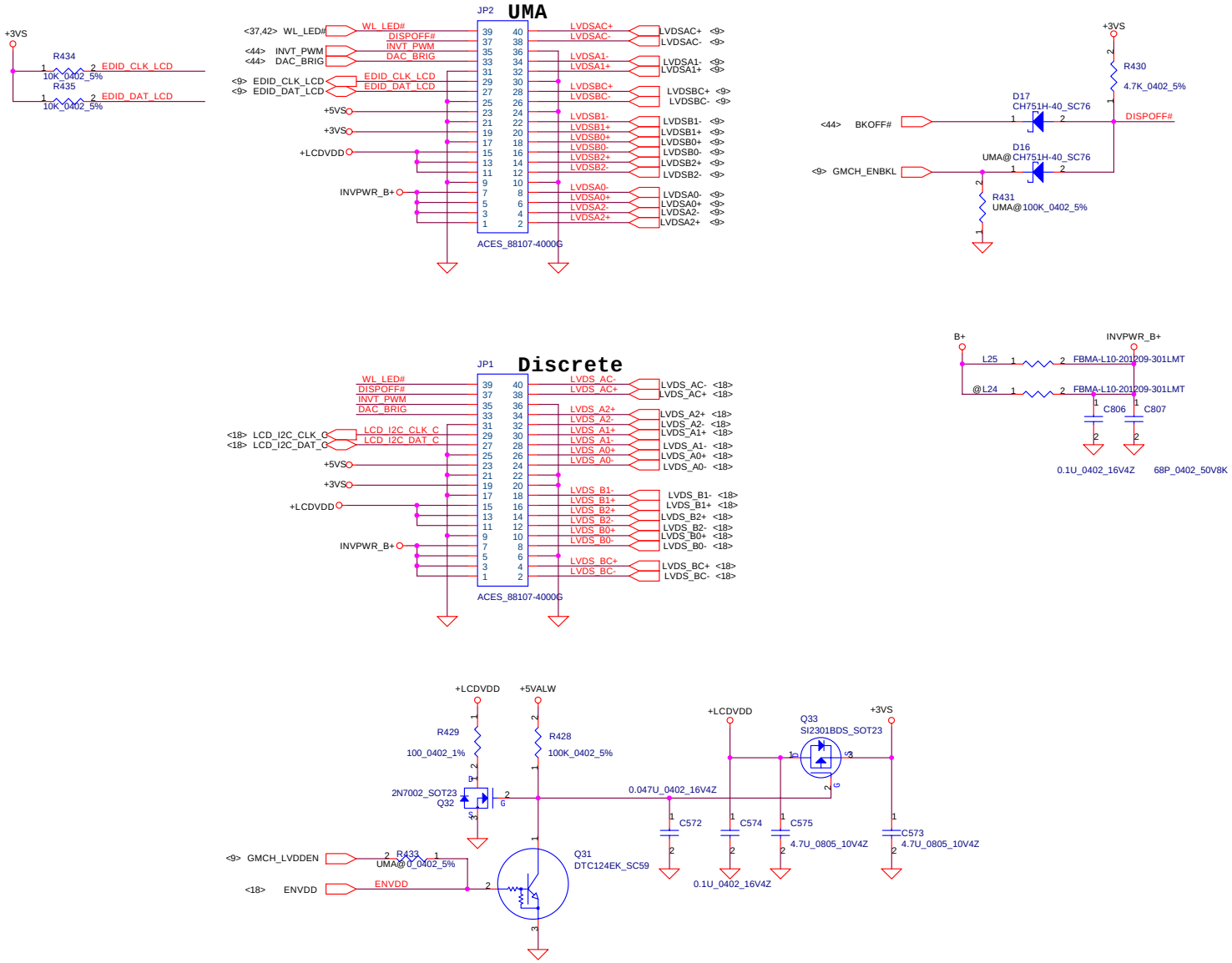

Security Classification	Compal Secret Data		
Issued Date	2005/03/10	Deciphered Date	2006/03/10

THIS SHEET OF ENGINEERING DRAWING IS THE PROPRIETARY PROPERTY OF COMPAL ELECTRONICS, INC. AND CONTAINS CONFIDENTIAL AND TRADE SECRET INFORMATION. THIS SHEET MAY NOT BE TRANSFERED FROM THE CUSTODY OF THE COMPETENT DIVISION OF R&D DEPARTMENT EXCEPT AS AUTHORIZED BY COMPAL ELECTRONICS, INC. NEITHER THIS SHEET NOR THE INFORMATION IT CONTAINS MAY BE USED BY OR DISCLOSED TO ANY THIRD PARTY WITHOUT PRIOR WRITTEN CONSENT OF COMPAL ELECTRONICS, INC.

Compal Electronics, Inc.

Title: **LVDS Connector**

Size: Custom | Document Number: LA-2841 | Rev: 1.0

Date: Thursday, December 15, 2005 | Sheet 16 of 60

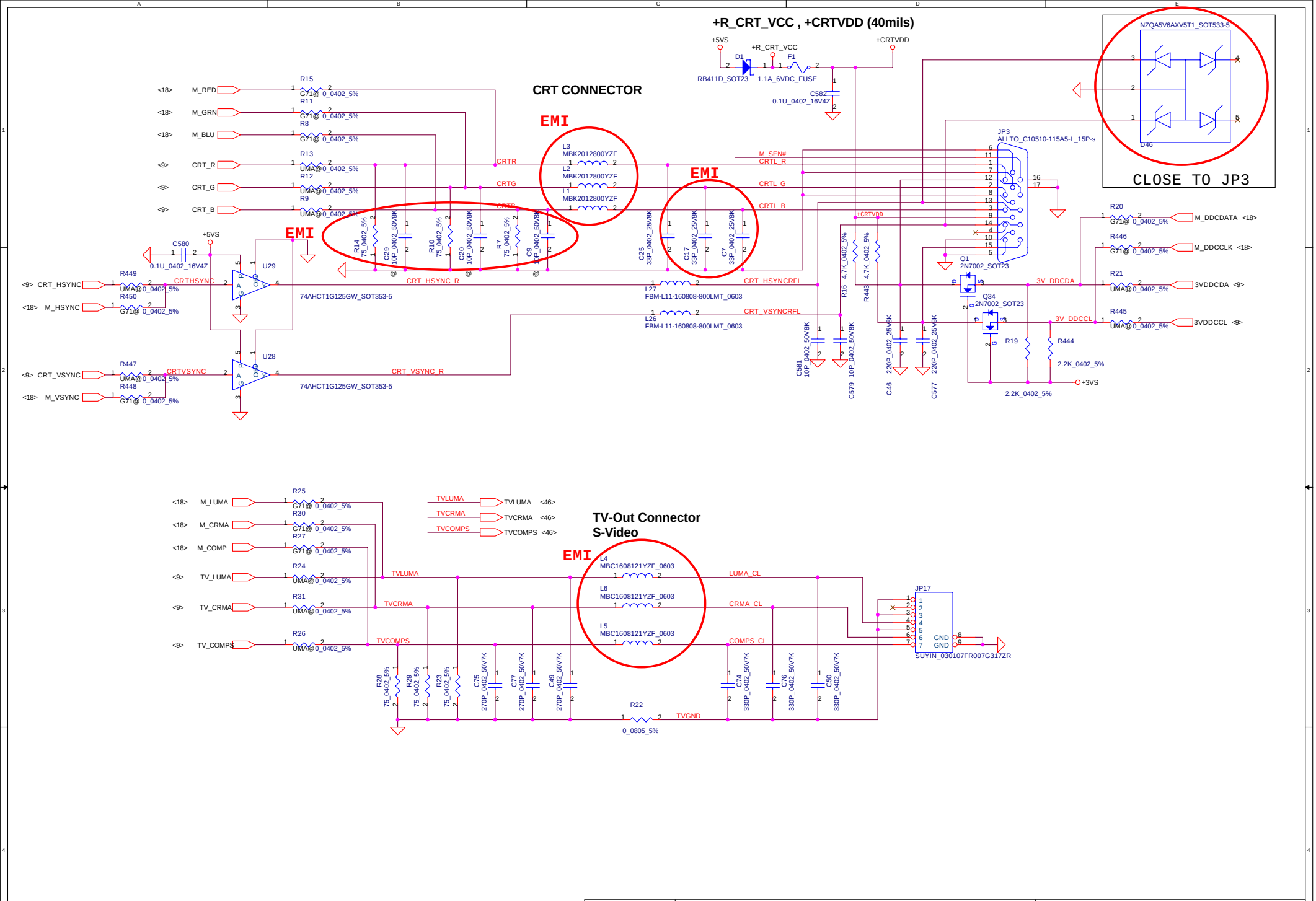

Security Classification	Compal Secret Data		
Issued Date	2005/03/10	Deciphered Date	2006/03/10

THIS SHEET OF ENGINEERING DRAWING IS THE PROPRIETARY PROPERTY OF COMPAL ELECTRONICS, INC. AND CONTAINS CONFIDENTIAL AND TRADE SECRET INFORMATION. THIS SHEET MAY NOT BE TRANSFERED FROM THE CUSTODY OF THE COMPETENT DIVISION OF R&D DEPARTMENT EXCEPT AS AUTHORIZED BY COMPAL ELECTRONICS, INC. NEITHER THIS SHEET NOR THE INFORMATION IT CONTAINS MAY BE USED BY OR DISCLOSED TO ANY THIRD PARTY WITHOUT PRIOR WRITTEN CONSENT OF COMPAL ELECTRONICS, INC.

Compal Electronics, Inc.

Title: **CRT & TVout Connector**

Size: Custom | Document Number: LA-2841 | Rev: 1.0

Date: Thursday, December 15, 2005 | Sheet 17 of 60

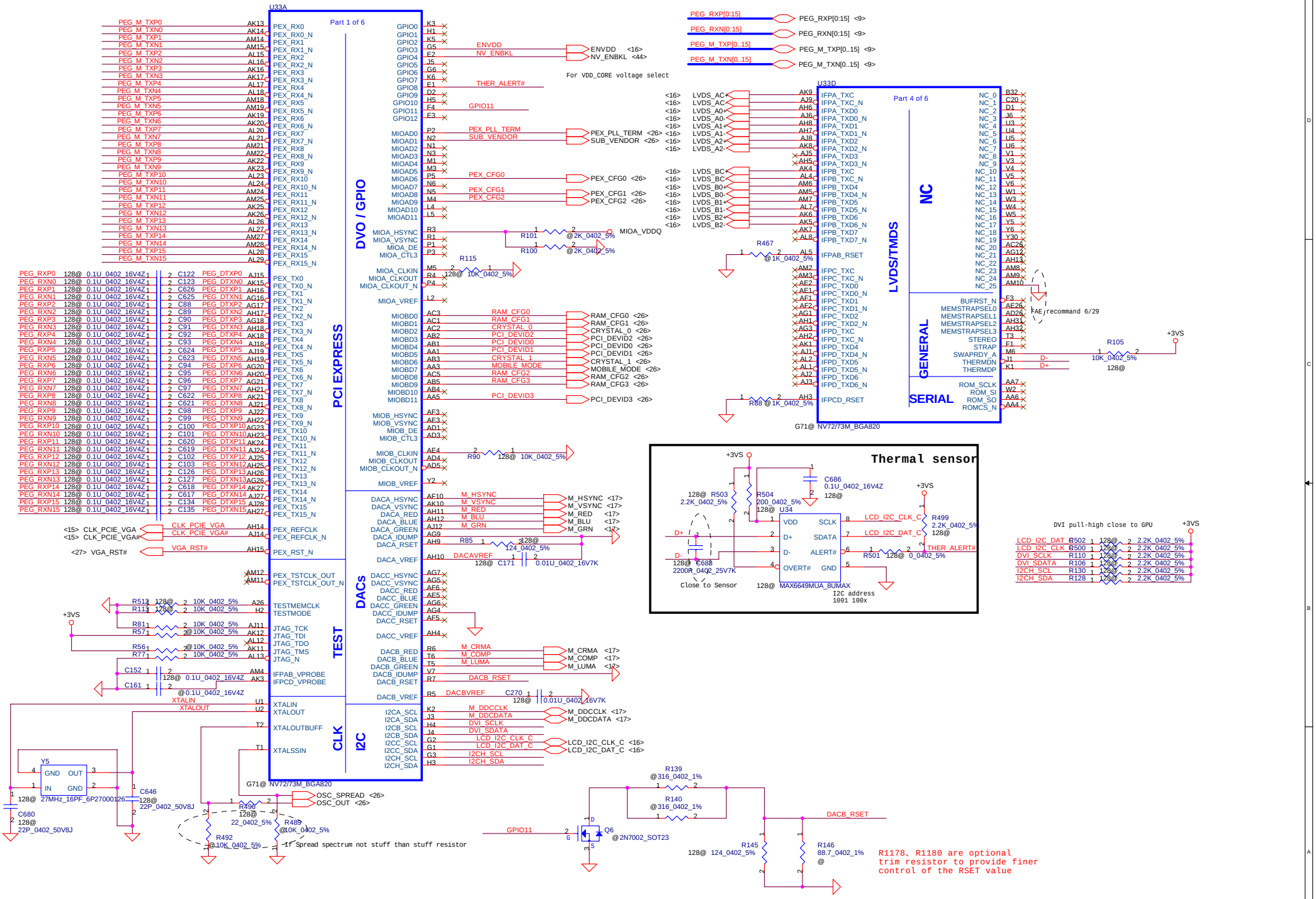
U33A
Part 1 of 6
PCI EXPRESS
DVO / GPIO
TEST
DACs
CLK
I2C
U33D
Part 4 of 6
LVDS/TMDS
NC
GENERAL
SERIAL
G71@ NV72/73M_BGA820
Thermal sensor
VDD
SCLK
D+
SDATA
D-
ALERT#
OVERT#
GND
MAX6649MUA_8UMAX
I2C address
1001 100x
Close to Sensor
DVI pull-high close to GPU
Y5
27MHz_16PF_6P27000126
OSC_SPREAD
OSC_OUT
Q6
@2N7002_SOT23
DACB_RSET
R1178、R1180 are optional
trim resistor to provide finer
control of the RSET value
Security Classification
Compal Secret Data
Issued Date
2005/03/10
Deciphered Date
2006/03/10
Compal Electronics, Inc.
G72/73VGA Board
Document Number
LA-2841
Rev
1.0
Date: Thursday, December 15, 2005
Sheet 18 of 60

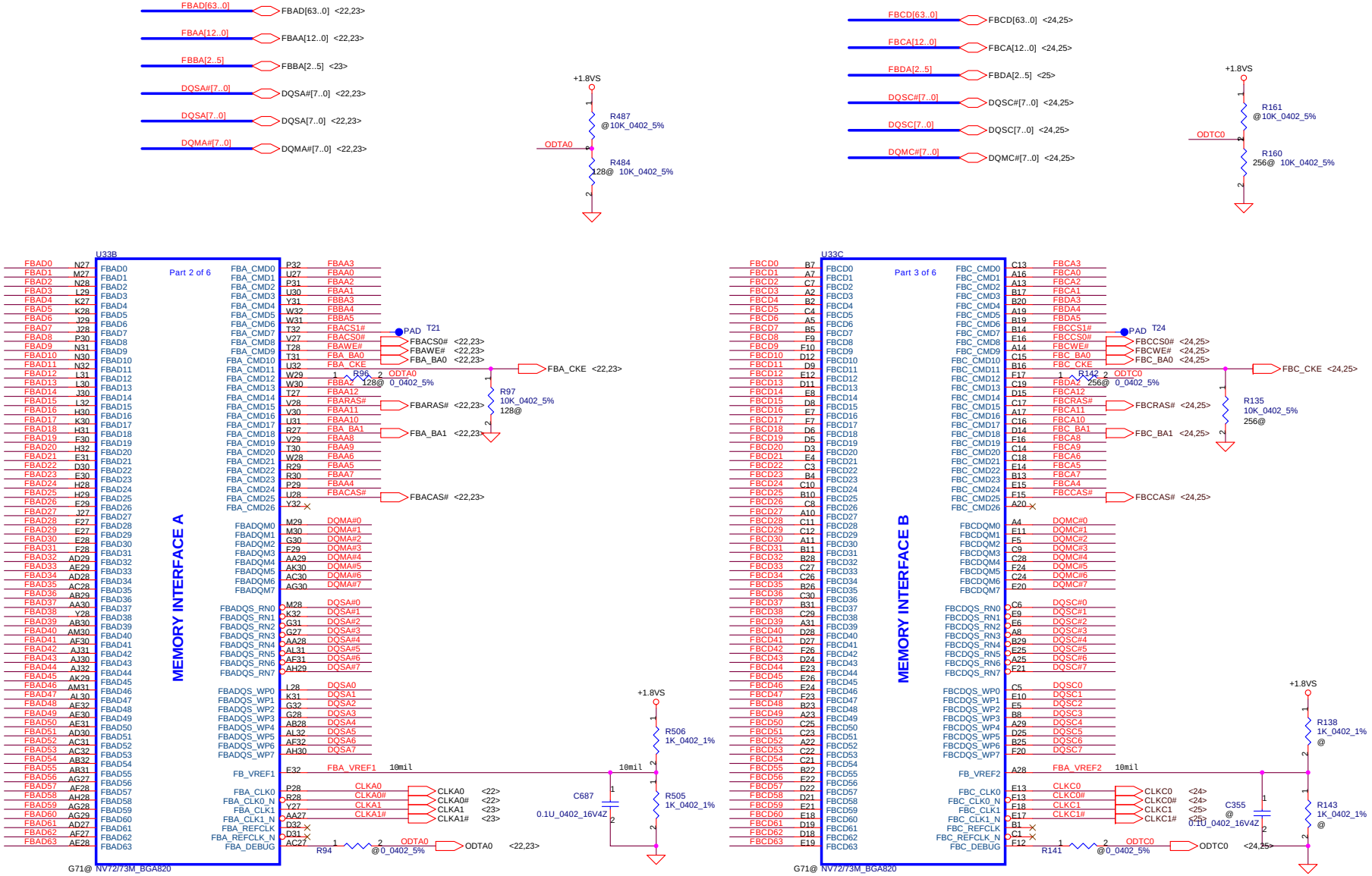

Security Classification	Compal Secret Data		
Issued Date	2005/03/10	Deciphered Date	2006/03/10

THIS SHEET OF ENGINEERING DRAWING IS THE PROPRIETARY PROPERTY OF COMPAL ELECTRONICS, INC. AND CONTAINS CONFIDENTIAL AND TRADE SECRET INFORMATION. THIS SHEET MAY NOT BE TRANSFERED FROM THE CUSTODY OF THE COMPETENT DIVISION OF R&D DEPARTMENT EXCEPT AS AUTHORIZED BY COMPAL ELECTRONICS, INC. NEITHER THIS SHEET NOR THE INFORMATION IT CONTAINS MAY BE USED BY OR DISCLOSED TO ANY THIRD PARTY WITHOUT PRIOR WRITTEN CONSENT OF COMPAL ELECTRONICS, INC.

Compal Electronics, Inc.

Title: **G72/73VGA Board**

Size: Custom | Document Number: LA-2841 | Rev: 1.0

Date: Thursday, December 15, 2005 | Sheet 19 of 60

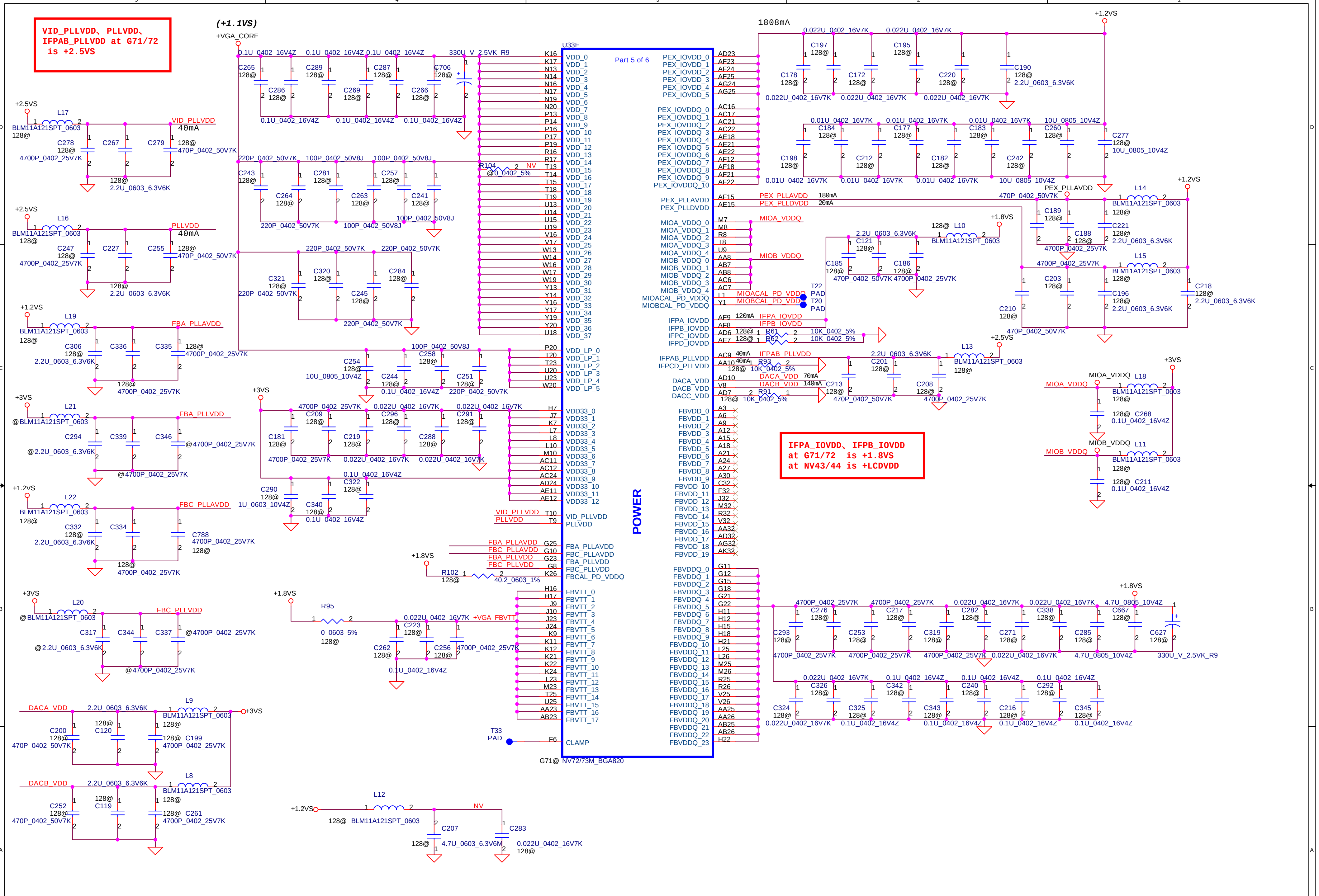

Security Classification	Compal Secret Data		
Issued Date	2005/03/10	Deciphered Date	2006/03/10

THIS SHEET OF ENGINEERING DRAWING IS THE PROPRIETARY PROPERTY OF COMPAL ELECTRONICS, INC. AND CONTAINS CONFIDENTIAL AND TRADE SECRET INFORMATION. THIS SHEET MAY NOT BE TRANSFERED FROM THE CUSTODY OF THE COMPETENT DIVISION OF R&D DEPARTMENT EXCEPT AS AUTHORIZED BY COMPAL ELECTRONICS, INC. NEITHER THIS SHEET NOR THE INFORMATION IT CONTAINS MAY BE USED BY OR DISCLOSED TO ANY THIRD PARTY WITHOUT PRIOR WRITTEN CONSENT OF COMPAL ELECTRONICS, INC.

Compal Electronics, Inc.

Title: G72/73VGA Board

Size: Custom | Document Number: LA-2841 | Rev: 1.0

Date: Thursday, December 15, 2005 |

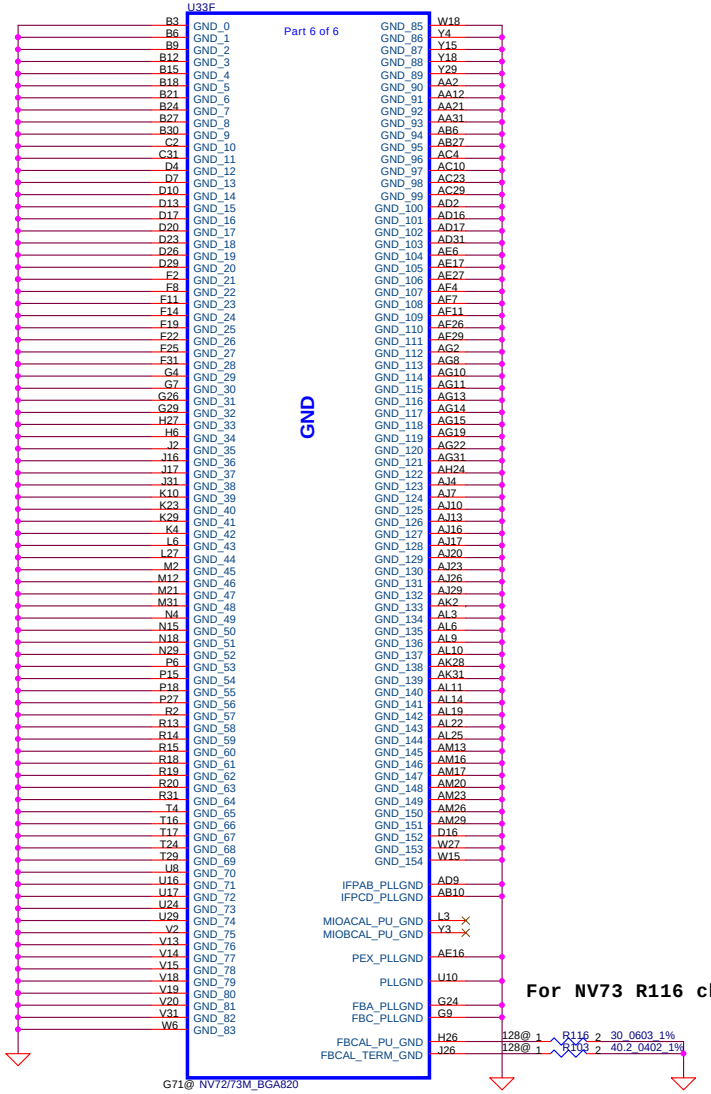

For NV73 R116 change to 40.2_0603_1%(SD014402A80)

Security Classification	Compal Secret Data		
Issued Date	2005/03/10	Deciphered Date	2006/03/10

THIS SHEET OF ENGINEERING DRAWING IS THE PROPRIETARY PROPERTY OF COMPAL ELECTRONICS, INC. AND CONTAINS CONFIDENTIAL AND TRADE SECRET INFORMATION. THIS SHEET MAY NOT BE TRANSFERED FROM THE CUSTODY OF THE COMPETENT DIVISION OF R&D DEPARTMENT EXCEPT AS AUTHORIZED BY COMPAL ELECTRONICS, INC. NEITHER THIS SHEET NOR THE INFORMATION IT CONTAINS MAY BE USED BY OR DISCLOSED TO ANY THIRD PARTY WITHOUT PRIOR WRITTEN CONSENT OF COMPAL ELECTRONICS, INC.

Compal Electronics, Inc.

Title: **G72/73VGA Board**

Size: Custom | Document Number: **LA-2841** | Rev: 1.0

Date: Thursday, December 15, 2005 | Sheet 21 of 60

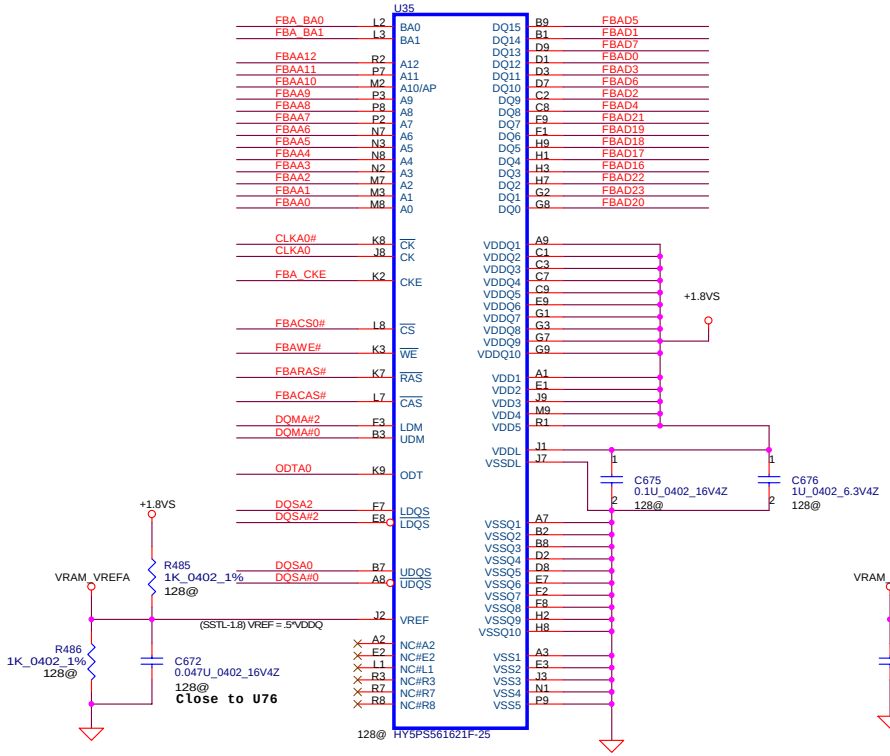

DDR2 BGA MEMORY

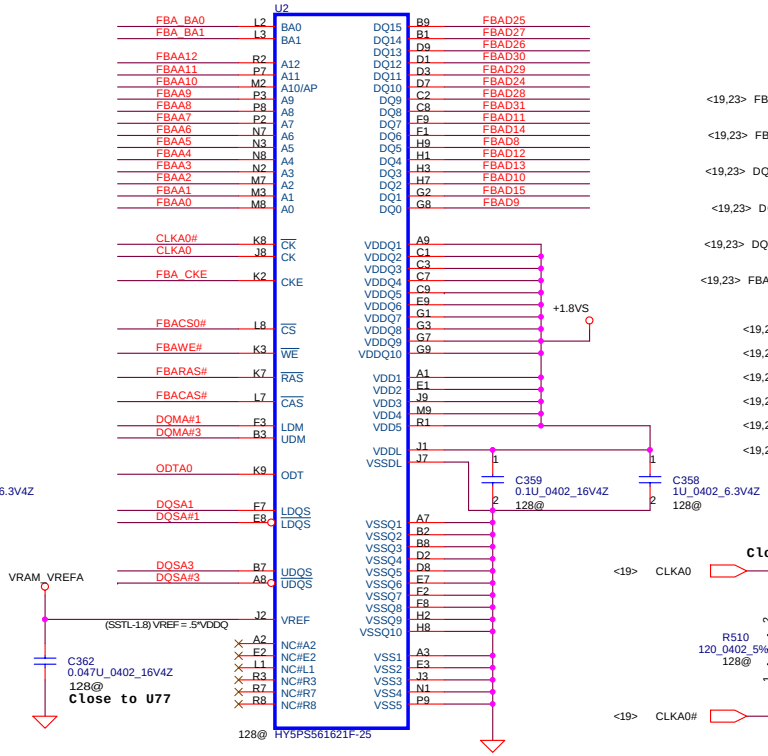

DDR2 BGA MEMORY

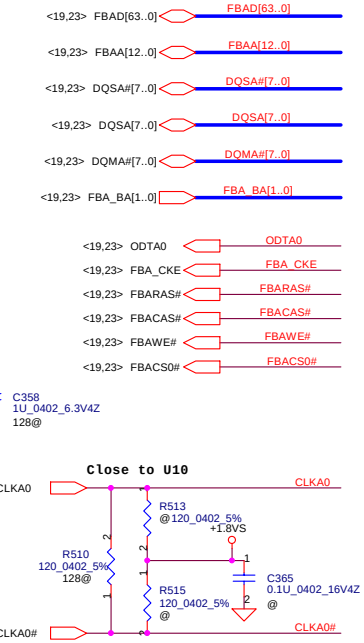

For NV73 R510 change to 481_0402_1%(SD00000CA80)

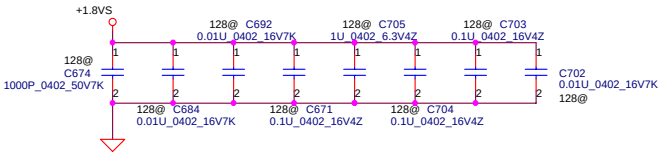

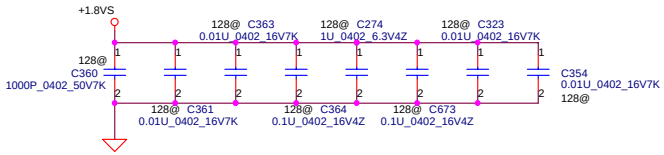

Security Classification	Compal Secret Data		
Issued Date	2005/03/10	Deciphered Date	2006/03/10

THIS SHEET OF ENGINEERING DRAWING IS THE PROPRIETARY PROPERTY OF COMPAL ELECTRONICS, INC. AND CONTAINS CONFIDENTIAL AND TRADE SECRET INFORMATION. THIS SHEET MAY NOT BE TRANSFERRED FROM THE CUSTODY OF THE COMPETENT DIVISION OF R&D DEPARTMENT EXCEPT AS AUTHORIZED BY COMPAL ELECTRONICS, INC. NEITHER THIS SHEET NOR THE INFORMATION IT CONTAINS MAY BE USED BY OR DISCLOSED TO ANY THIRD PARTY WITHOUT PRIOR WRITTEN CONSENT OF COMPAL ELECTRONICS, INC.

Compal Electronics, Inc.

Title: **G72/73VGA Board**

Size: Custom | Document Number: LA-2841 | Rev: 1.0

Date: Thursday, December 15, 2005 | Sheet 22 of 60

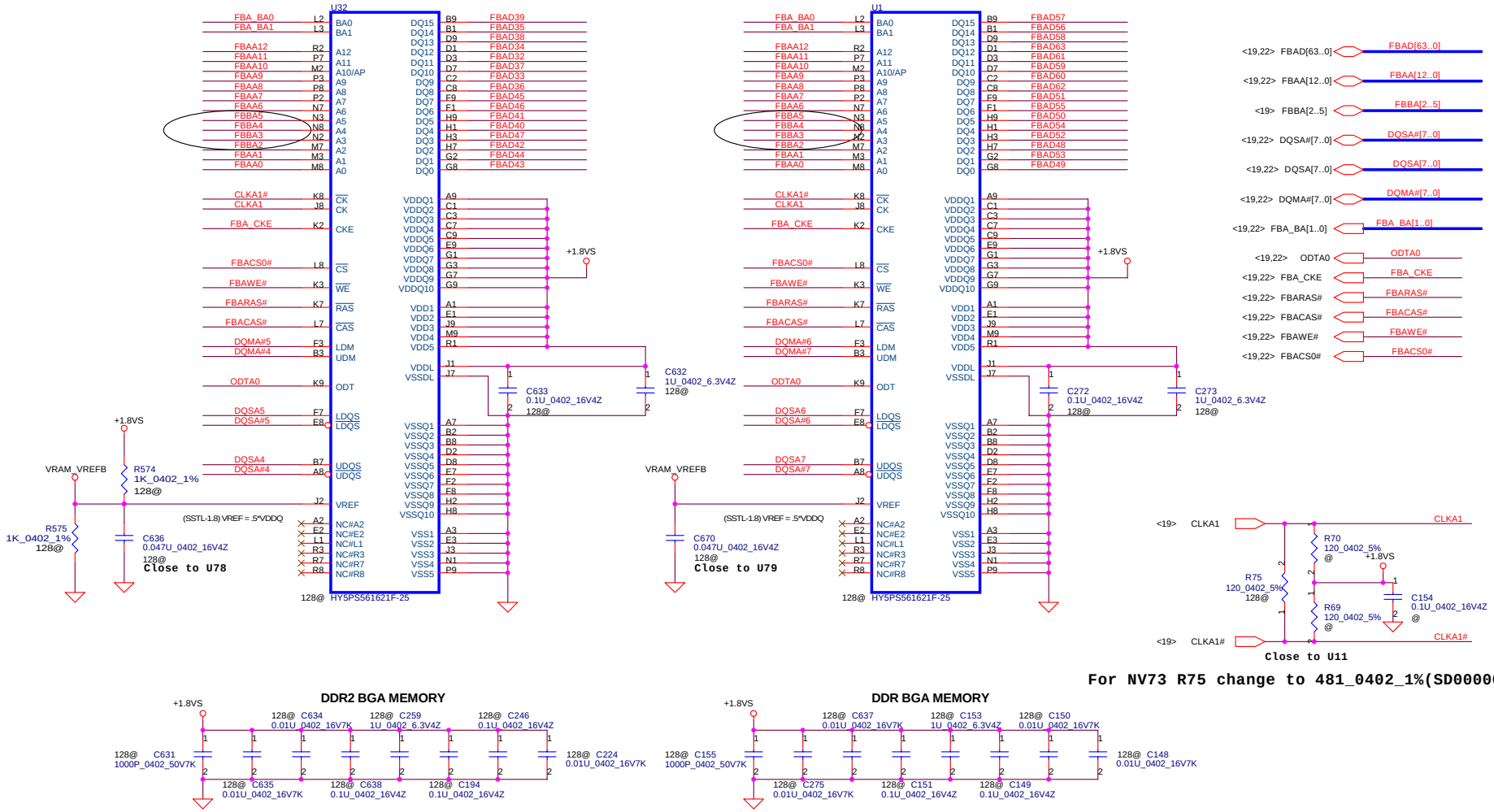

For NV73 R75 change to 481_0402_1%(SD00000CA80)

Security Classification	Compal Secret Data		
Issued Date	2005/03/10	Deciphered Date	2006/03/10

THIS SHEET OF ENGINEERING DRAWING IS THE PROPRIETARY PROPERTY OF COMPAL ELECTRONICS, INC. AND CONTAINS CONFIDENTIAL AND TRADE SECRET INFORMATION. THIS SHEET MAY NOT BE TRANSFERED FROM THE CUSTODY OF THE COMPETENT DIVISION OF R&D DEPARTMENT EXCEPT AS AUTHORIZED BY COMPAL ELECTRONICS, INC. NEITHER THIS SHEET NOR THE INFORMATION IT CONTAINS MAY BE USED BY OR DISCLOSED TO ANY THIRD PARTY WITHOUT PRIOR WRITTEN CONSENT OF COMPAL ELECTRONICS, INC.

Compal Electronics, Inc.

Title: **G72/73VGA Board**

Size: Custom | Document Number: LA-2841 | Rev: 1.0

Date: Thursday, December 15, 2005 | Sheet 23 of 60

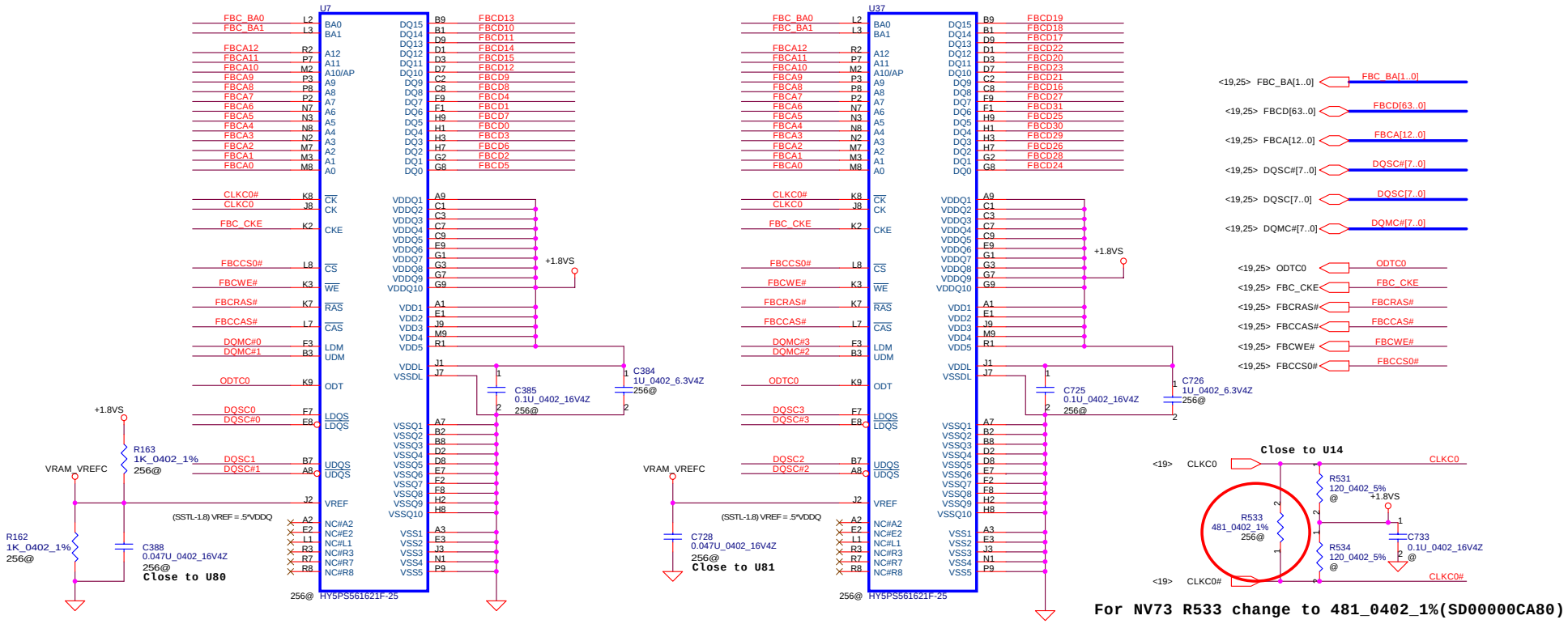

DDR2 BGA MEMORY

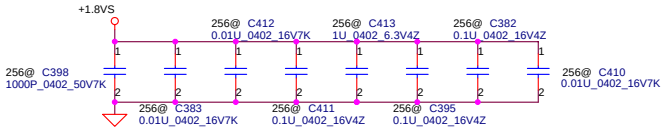

DDR BGA MEMORY

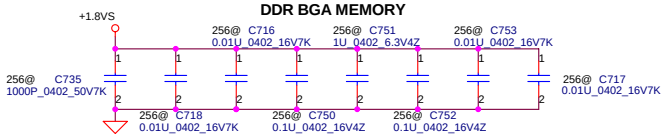

Security Classification	Compal Secret Data		
Issued Date	2005/03/10	Deciphered Date	2006/03/10

THIS SHEET OF ENGINEERING DRAWING IS THE PROPRIETARY PROPERTY OF COMPAL ELECTRONICS, INC. AND CONTAINS CONFIDENTIAL AND TRADE SECRET INFORMATION. THIS SHEET MAY NOT BE TRANSFERED FROM THE CUSTODY OF THE COMPETENT DIVISION OF R&D DEPARTMENT EXCEPT AS AUTHORIZED BY COMPAL ELECTRONICS, INC. NEITHER THIS SHEET NOR THE INFORMATION IT CONTAINS MAY BE USED BY OR DISCLOSED TO ANY THIRD PARTY WITHOUT PRIOR WRITTEN CONSENT OF COMPAL ELECTRONICS, INC.

Compal Electronics, Inc.

Title: **G71/72VGA Board**

Size: Custom | Document Number: LA-2841 | Rev: 1.0

Date: Thursday, December 15, 2005 | Sheet 24 of 60

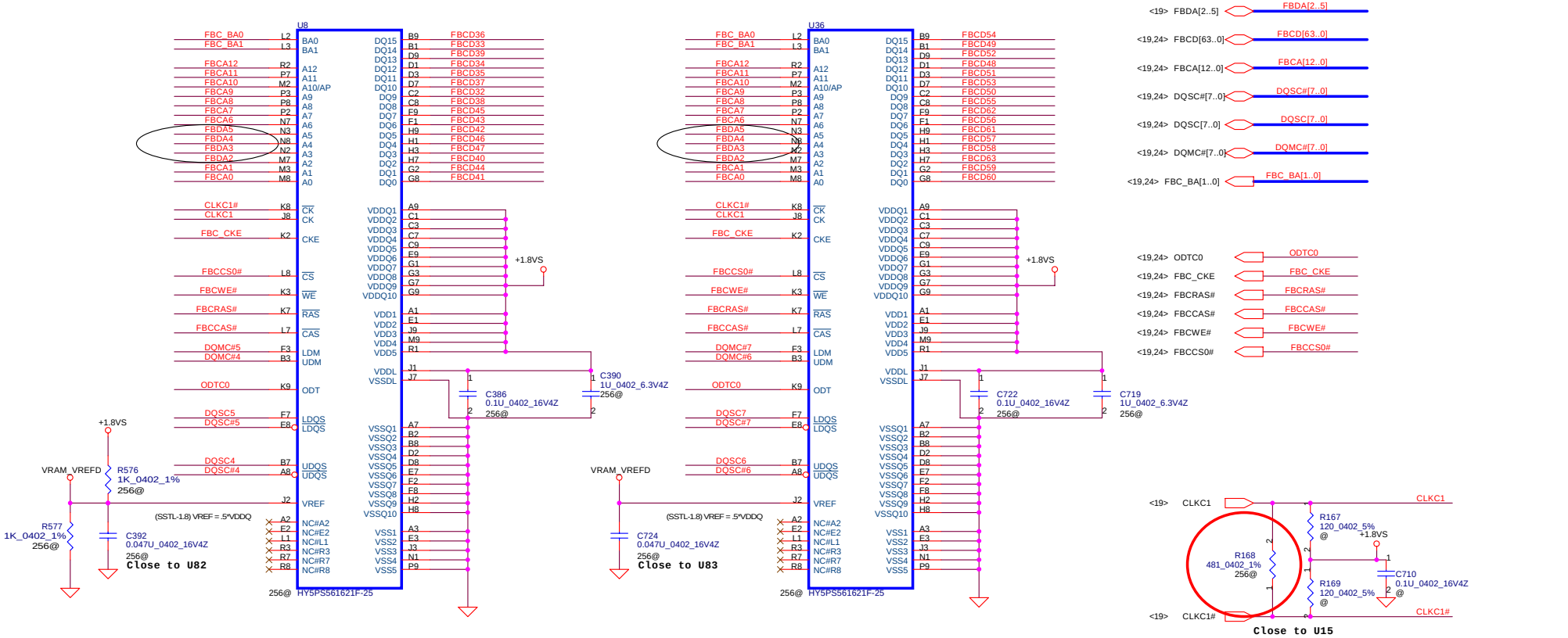

For NV73 R168 change to 481_0402_1%(SD00000CA80)

DDR2 BGA MEMORY

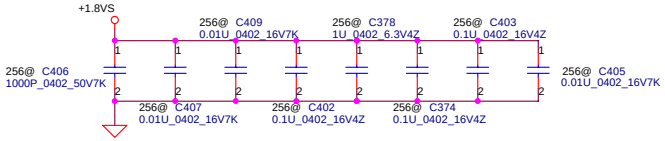

DDR2 BGA MEMORY

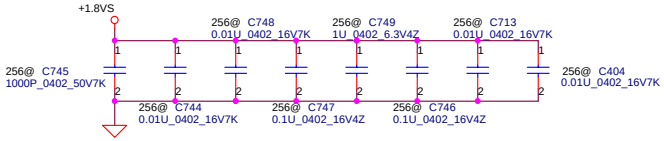

Security Classification	Compal Secret Data		
Issued Date	2005/03/10	Deciphered Date	2006/03/10

THIS SHEET OF ENGINEERING DRAWING IS THE PROPRIETARY PROPERTY OF COMPAL ELECTRONICS, INC. AND CONTAINS CONFIDENTIAL AND TRADE SECRET INFORMATION. THIS SHEET MAY NOT BE TRANSFERED FROM THE CUSTODY OF THE COMPETENT DIVISION OF R&D DEPARTMENT EXCEPT AS AUTHORIZED BY COMPAL ELECTRONICS, INC. NEITHER THIS SHEET NOR THE INFORMATION IT CONTAINS MAY BE USED BY OR DISCLOSED TO ANY THIRD PARTY WITHOUT PRIOR WRITTEN CONSENT OF COMPAL ELECTRONICS, INC.

Compal Electronics, Inc.

Title: **G71/72VGA Board**

Size: Custom | Document Number: LA-2841 | Rev: 1.0

Date: Thursday, December 15, 2005 | Sheet 25 of 60

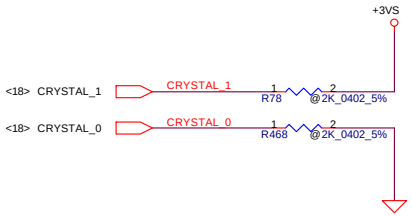

STRAPS	PIN	DESCRIPTION	Value	
CRYSTAL[1:0]	MIOBD[6,2]	27MHz=10, 14.318MHz=01, 13.5MHz=00	10	
ROM_TYPE[1:0]	MIOBD [11:10]	Parallel=00, SERIAL M25P10=01, Serial SST45VF=10	01	
SUB_VENDOR	MIOAD1	VBIOS on card (pull high) VBIOS with system BIOS (pull down)	0	
PEX_PLL_TERM	MIOAD0		0	
PEX_CFG[2:0]	MIOAD [9,8,6]	Overridden	001	
RAM_CFG[3:0]		16Mx16 (1.8V or 2.5V)Hynix X 4pcs	0011	
		16Mx16 (1.8V or 2.5V)Infineon X 4pcs	0010	
		16Mx16 (1.8V or 2.5V)Samsung X 4pcs	0001	
		16Mx16 (1.8V or 2.5V)Hynix X 8pcs	1011	
		16Mx16 (1.8V or 2.5V)Infineon X 8pcs	1010	
		16Mx16 (1.8V or 2.5V)Samsung X 8pcs	1001	
PCI_DEVID[3:0]	A01 VIPD[5:3] MIOA_HSYNC	NV72M	1000	
		NV73M	1000	

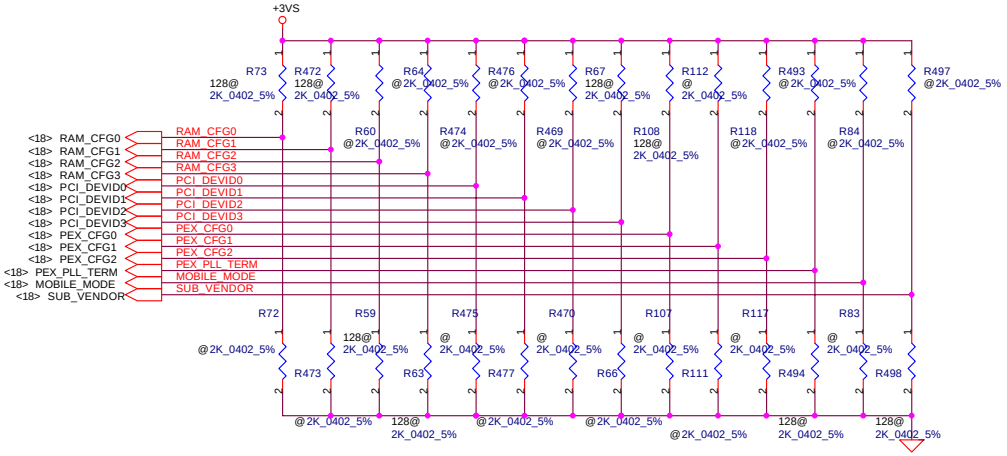

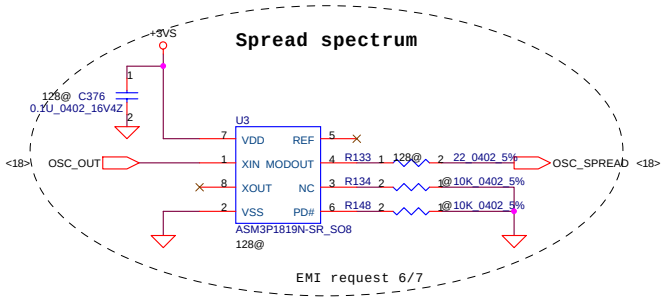

Security Classification	Compal Secret Data		
Issued Date	2005/03/01	Deciphered Date	2006/03/01

THIS SHEET OF ENGINEERING DRAWING IS THE PROPRIETARY PROPERTY OF COMPAL ELECTRONICS, INC. AND CONTAINS CONFIDENTIAL AND TRADE SECRET INFORMATION. THIS SHEET MAY NOT BE TRANSFERED FROM THE CUSTODY OF THE COMPETENT DIVISION OF R&D DEPARTMENT EXCEPT AS AUTHORIZED BY COMPAL ELECTRONICS, INC. NEITHER THIS SHEET NOR THE INFORMATION IT CONTAINS MAY BE USED BY OR DISCLOSED TO ANY THIRD PARTY WITHOUT PRIOR WRITTEN CONSENT OF COMPAL ELECTRONICS, INC.

Compal Electronics, Inc.

Title: **G71/72 VGA Board**

Size: Custom | Document Number: LA-2841 | Rev: 1.0

Date: Thursday, December 15, 2005 | Sheet 26 of 60

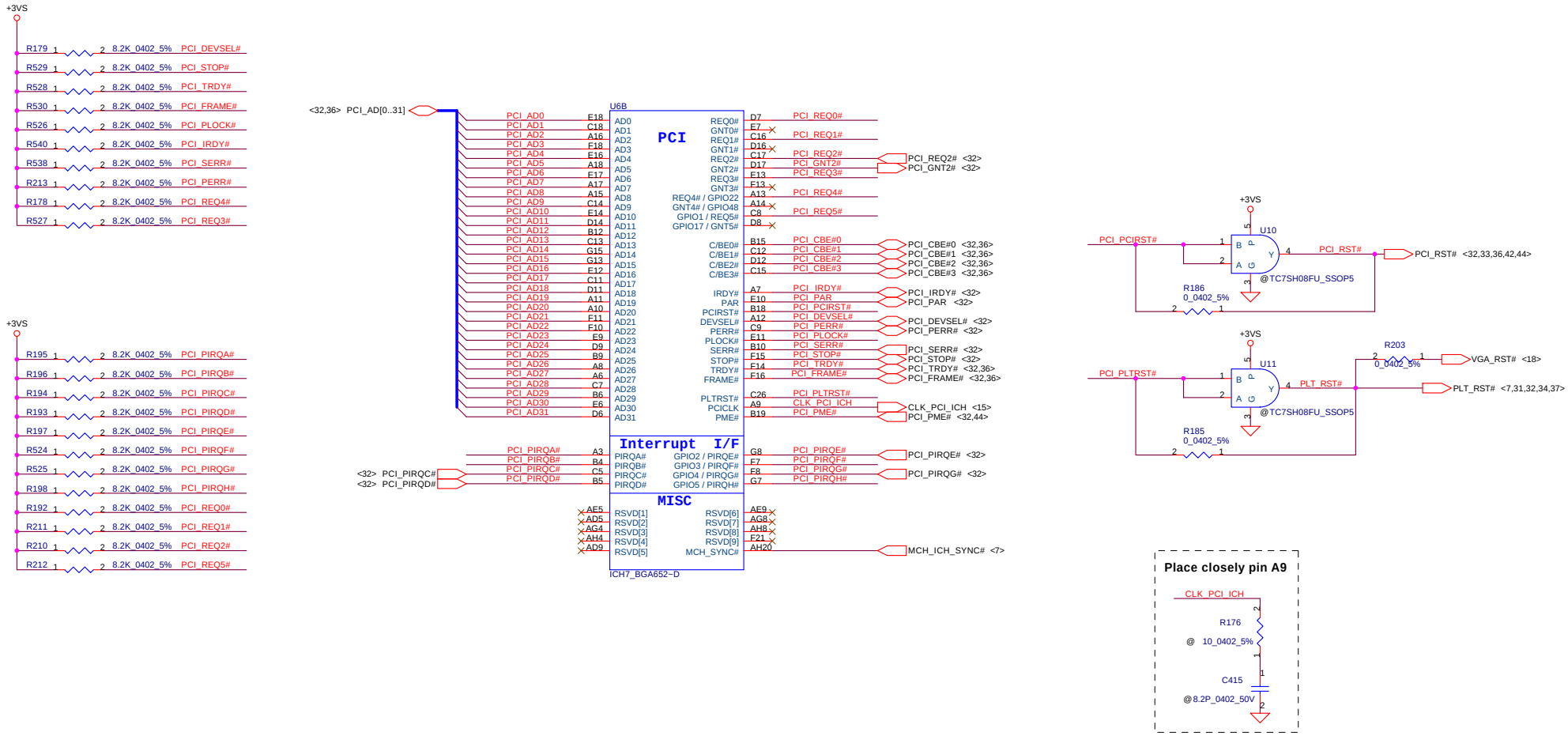

Security Classification	Compal Secret Data		
Issued Date	2005/03/10	Deciphered Date	2006/03/10

THIS SHEET OF ENGINEERING DRAWING IS THE PROPRIETARY PROPERTY OF COMPAL ELECTRONICS, INC. AND CONTAINS CONFIDENTIAL AND TRADE SECRET INFORMATION. THIS SHEET MAY NOT BE TRANSFERED FROM THE CUSTODY OF THE COMPETENT DIVISION OF R&D DEPARTMENT EXCEPT AS AUTHORIZED BY COMPAL ELECTRONICS, INC. NEITHER THIS SHEET NOR THE INFORMATION IT CONTAINS MAY BE USED BY OR DISCLOSED TO ANY THIRD PARTY WITHOUT PRIOR WRITTEN CONSENT OF COMPAL ELECTRONICS, INC.

Compal Electronics, Inc.

Title: **ICH7-M(1/4)**

Size | Document Number: *LA-2841* | Rev 1.0

Date: Thursday, December 15, 2005 | Sheet 27 of 60

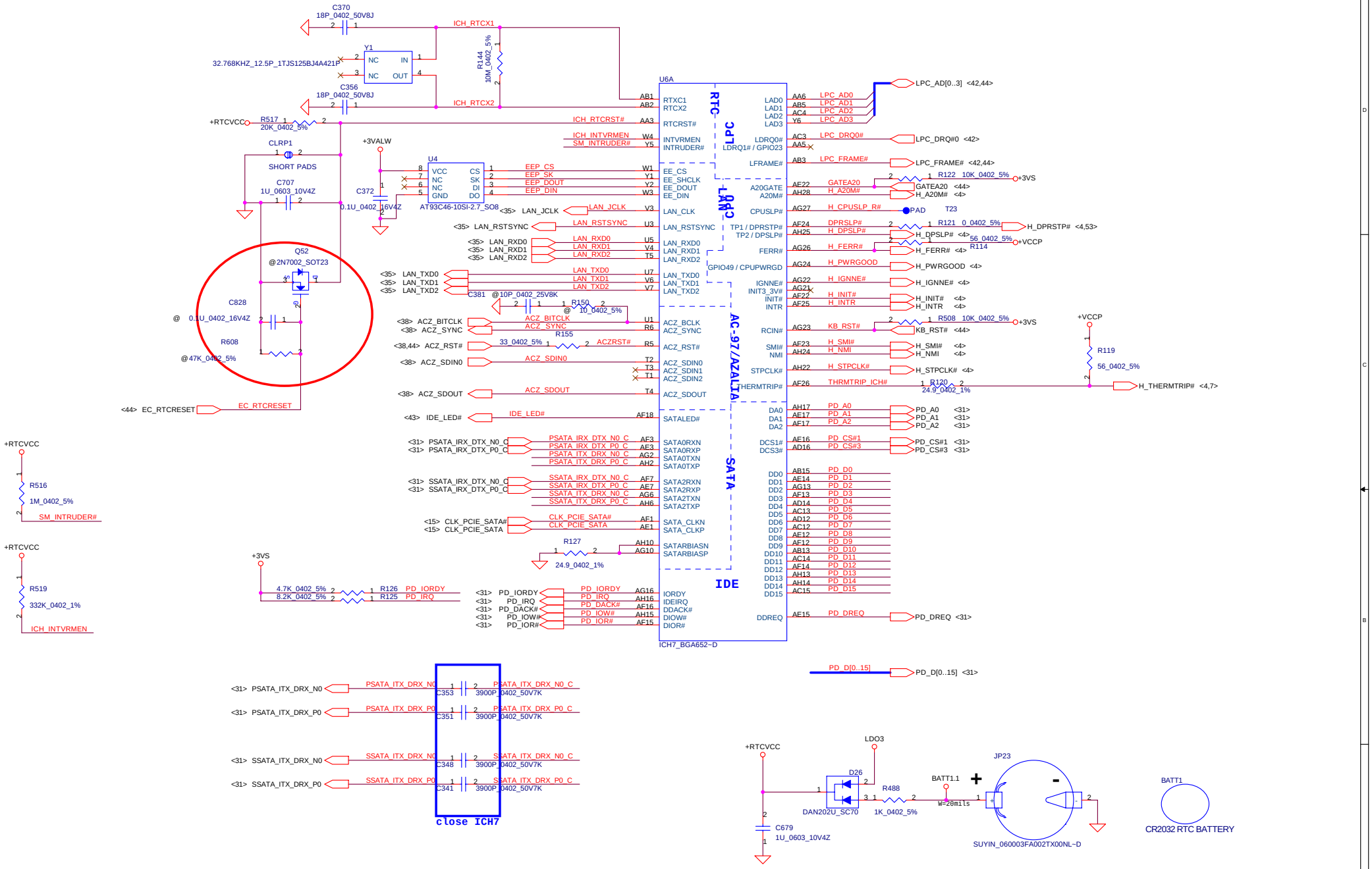

Security Classification	Compal Secret Data		
Issued Date	2005/03/10	Deciphered Date	2006/03/10

THIS SHEET OF ENGINEERING DRAWING IS THE PROPRIETARY PROPERTY OF COMPAL ELECTRONICS, INC. AND CONTAINS CONFIDENTIAL AND TRADE SECRET INFORMATION. THIS SHEET MAY NOT BE TRANSFERED FROM THE CUSTODY OF THE COMPETENT DIVISION OF R&D DEPARTMENT EXCEPT AS AUTHORIZED BY COMPAL ELECTRONICS, INC. NEITHER THIS SHEET NOR THE INFORMATION IT CONTAINS MAY BE USED BY OR DISCLOSED TO ANY THIRD PARTY WITHOUT PRIOR WRITTEN CONSENT OF COMPAL ELECTRONICS, INC.

Compal Electronics, Inc.

Title: **ICH7-M(2/4)**

Size: Custom | Document Number: LA-2841 | Rev: 1.0

Date: Thursday, December 15, 2005 | Sheet 28 of 60

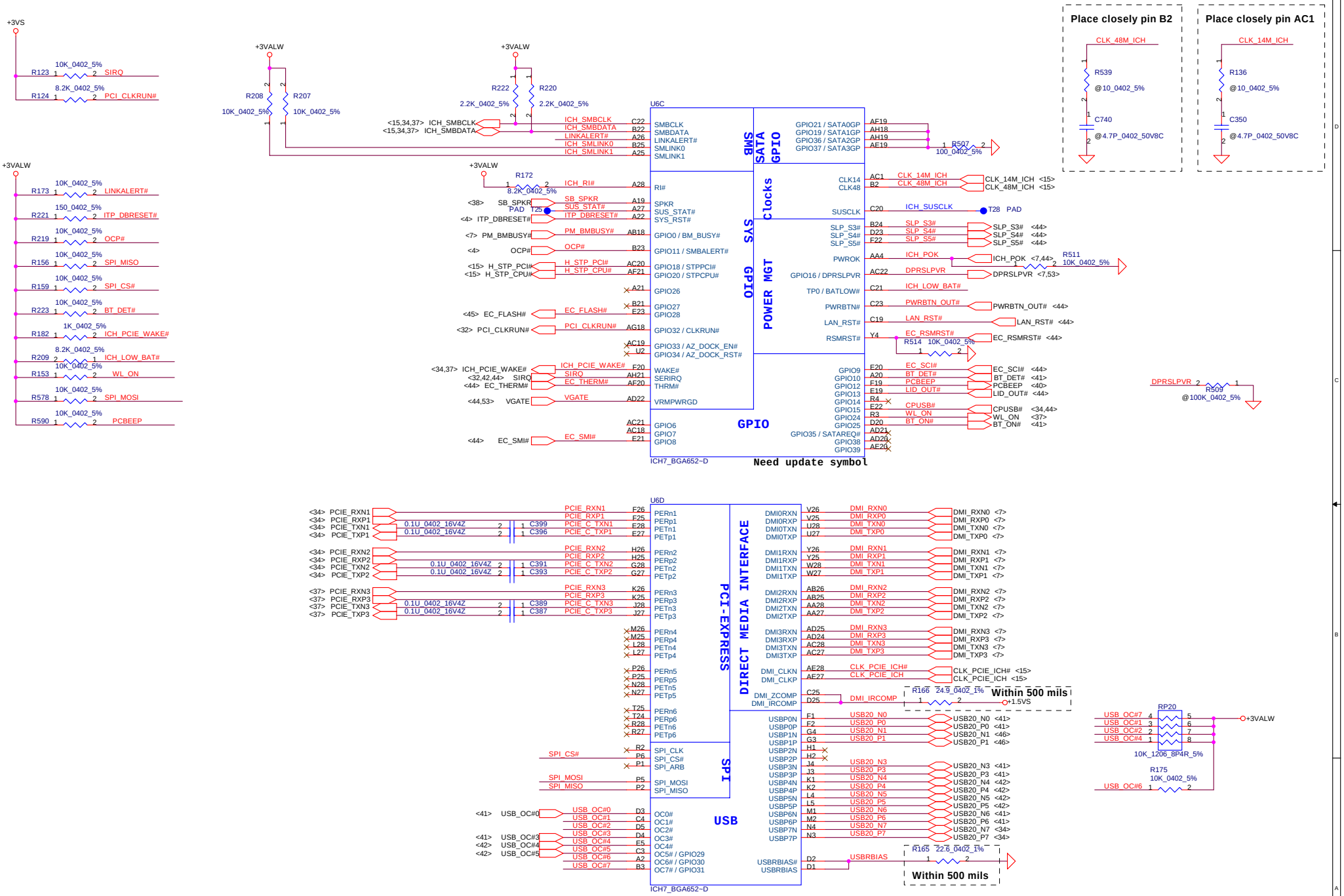
Place closely pin B2
Place closely pin AC1
U6C
ICH7_BGA652-D
Need update symbol
GPIO
SMB
SATA GPIO
Clocks
SYS GPIO
POWER MGT
U6D
PCI-EXPRESS
DIRECT MEDIA INTERFACE
SPI
USB
Within 500 mils
Compal Secret Data
Compal Electronics, Inc.
ICH7-M(3/4)
LA-2841
Issued Date 2005/03/10
Deciphered Date 2006/03/10
Thursday, December 15, 2005
Sheet 29 of 60

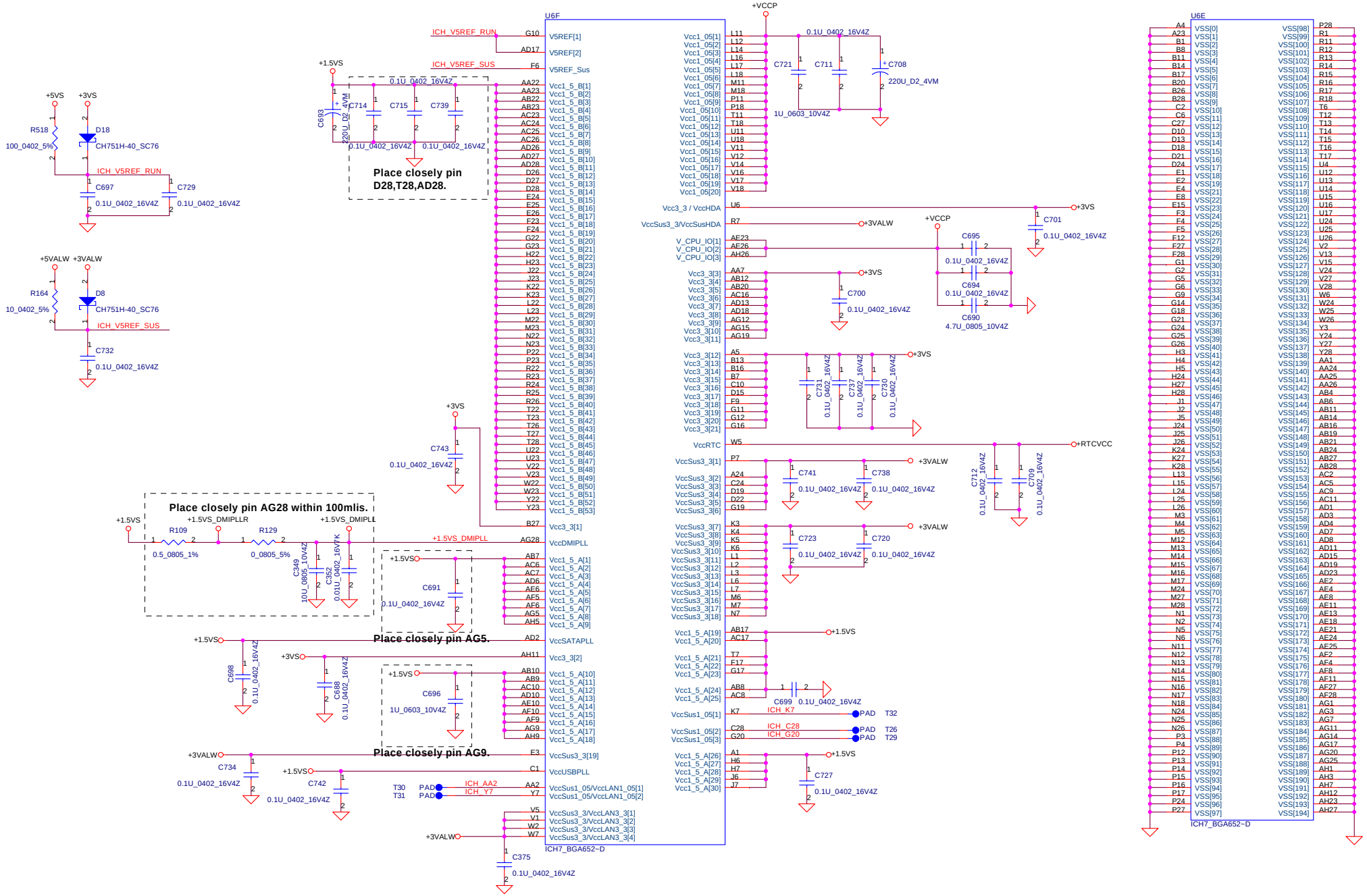

Security Classification	Compal Secret Data		
Issued Date	2005/03/10	Deciphered Date	2006/03/10

THIS SHEET OF ENGINEERING DRAWING IS THE PROPRIETARY PROPERTY OF COMPAL ELECTRONICS, INC. AND CONTAINS CONFIDENTIAL AND TRADE SECRET INFORMATION. THIS SHEET MAY NOT BE TRANSFERED FROM THE CUSTODY OF THE COMPETENT DIVISION OF R&D DEPARTMENT EXCEPT AS AUTHORIZED BY COMPAL ELECTRONICS, INC. NEITHER THIS SHEET NOR THE INFORMATION IT CONTAINS MAY BE USED BY OR DISCLOSED TO ANY THIRD PARTY WITHOUT PRIOR WRITTEN CONSENT OF COMPAL ELECTRONICS, INC.

Compal Electronics, Inc.

Title: **ICH7-M(4/4)**

Size: Custom | Document Number: LA-2841 | Rev: 1.0

Date: Thursday, December 15, 2005 | Sheet 30 of 60

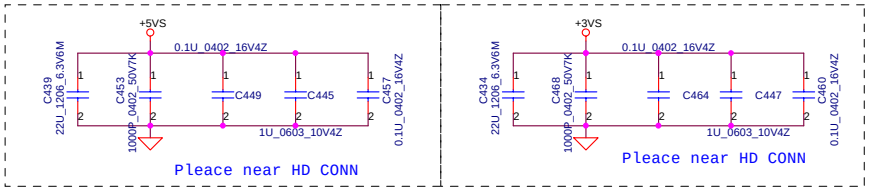

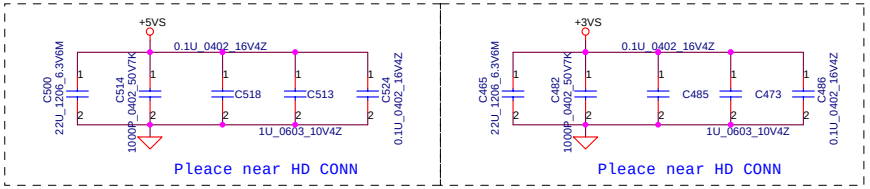

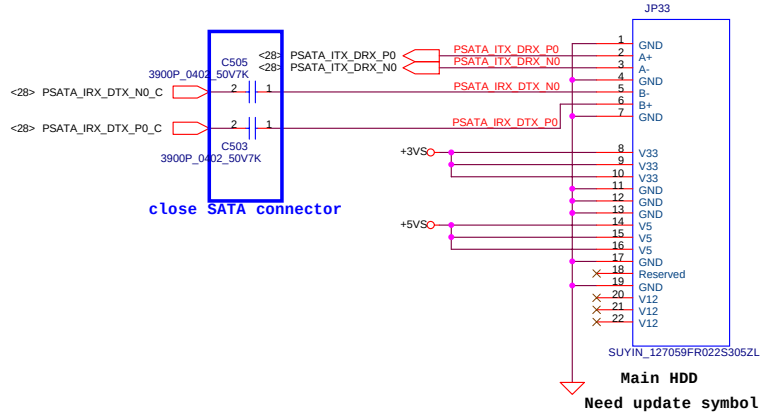

Main HDD

Need update symbol

Main SATA +5V Default

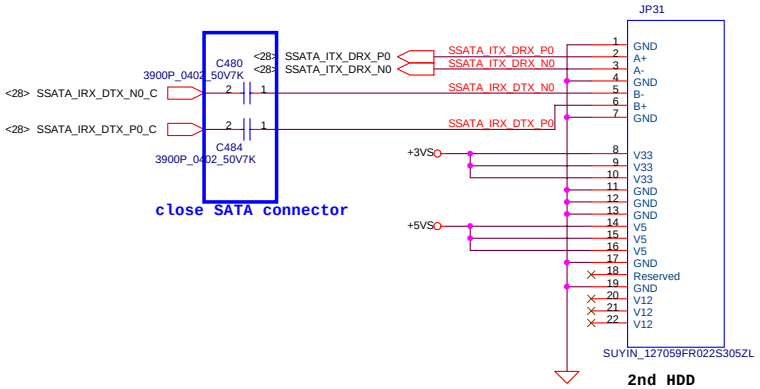

2nd HDD

Need update symbol

Main SATA +5V Default

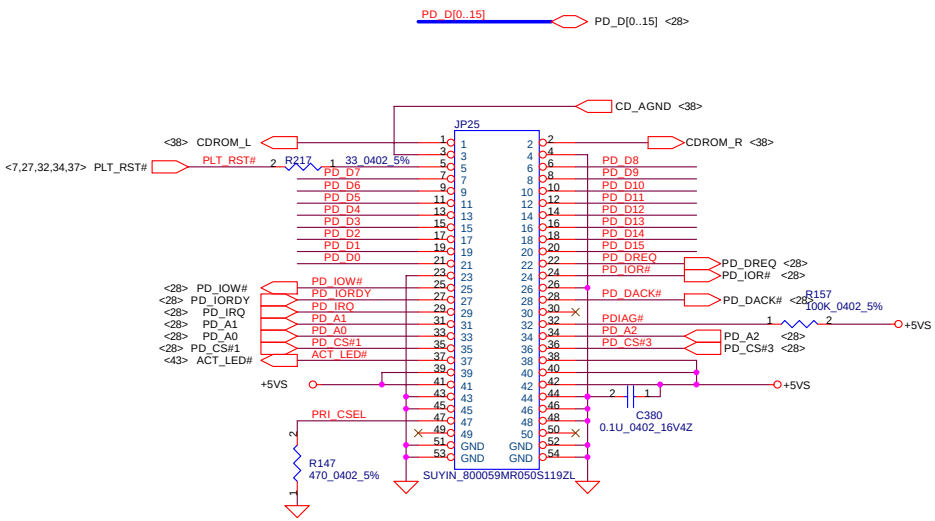

CD-ROM Connector

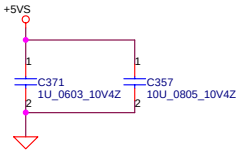

Security Classification	Compal Secret Data		
Issued Date	2005/03/10	Deciphered Date	2006/03/10

THIS SHEET OF ENGINEERING DRAWING IS THE PROPRIETARY PROPERTY OF COMPAL ELECTRONICS, INC. AND CONTAINS CONFIDENTIAL AND TRADE SECRET INFORMATION. THIS SHEET MAY NOT BE TRANSFERED FROM THE CUSTODY OF THE COMPETENT DIVISION OF R&D DEPARTMENT EXCEPT AS AUTHORIZED BY COMPAL ELECTRONICS, INC. NEITHER THIS SHEET NOR THE INFORMATION IT CONTAINS MAY BE USED BY OR DISCLOSED TO ANY THIRD PARTY WITHOUT PRIOR WRITTEN CONSENT OF COMPAL ELECTRONICS, INC.

Compal Electronics, Inc.

Title: **HDD & CDROM**

Size: Custom | Document Number: *LA-2841* | Rev: 1.0

Date: Thursday, December 15, 2005 | Sheet 31 of 60

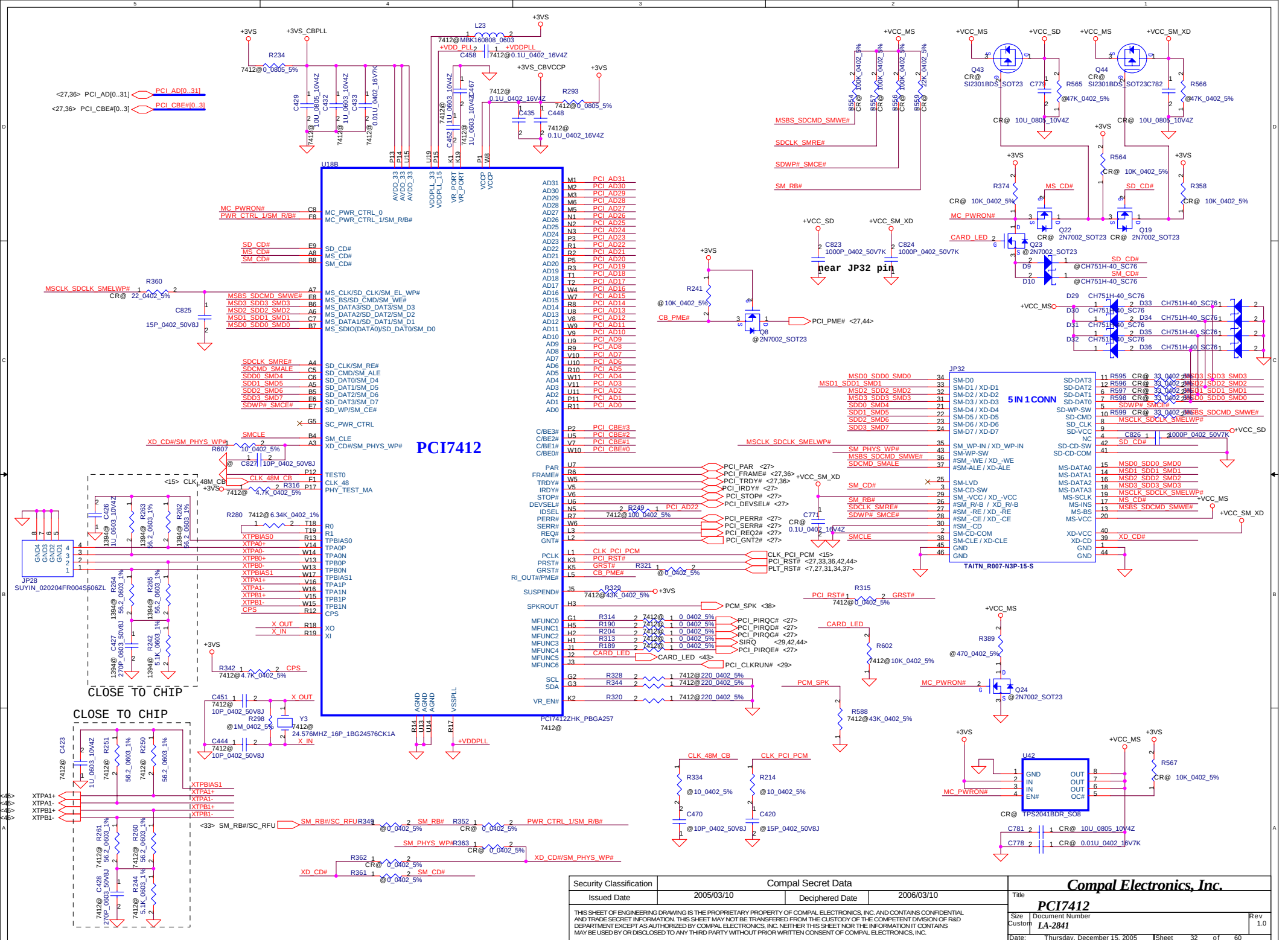

Security Classification	Compal Secret Data		
Issued Date	2005/03/10	Deciphered Date	2006/03/10

THIS SHEET OF ENGINEERING DRAWING IS THE PROPRIETARY PROPERTY OF COMPAL ELECTRONICS, INC. AND CONTAINS CONFIDENTIAL AND TRADE SECRET INFORMATION. THIS SHEET MAY NOT BE TRANSFERED FROM THE CUSTODY OF THE COMPETENT DIVISION OF R&D DEPARTMENT EXCEPT AS AUTHORIZED BY COMPAL ELECTRONICS, INC. NEITHER THIS SHEET NOR THE INFORMATION IT CONTAINS MAY BE USED BY OR DISCLOSED TO ANY THIRD PARTY WITHOUT PRIOR WRITTEN CONSENT OF COMPAL ELECTRONICS, INC.

Compal Electronics, Inc.

Title: **PCI7412**

Size: Custom | Document Number: LA-2841 | Rev: 1.0

Date: Thursday, December 15, 2005 | Sheet 32 of 60

CardBus Power Switch

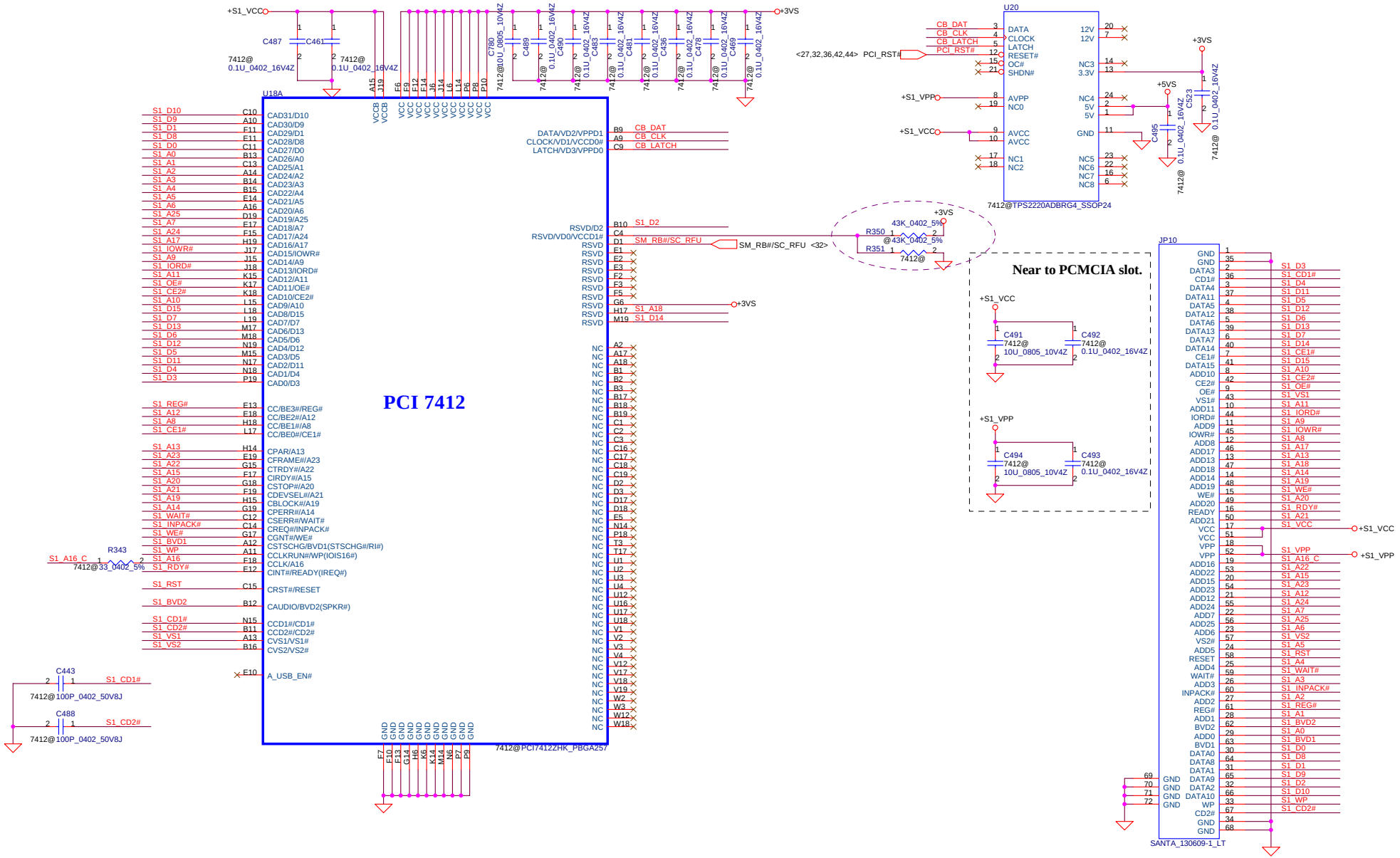

Security Classification	Compal Secret Data		
Issued Date	2005/03/10	Deciphered Date	2006/03/10

THIS SHEET OF ENGINEERING DRAWING IS THE PROPRIETARY PROPERTY OF COMPAL ELECTRONICS, INC. AND CONTAINS CONFIDENTIAL AND TRADE SECRET INFORMATION. THIS SHEET MAY NOT BE TRANSFERED FROM THE CUSTODY OF THE COMPETENT DIVISION OF R&D DEPARTMENT EXCEPT AS AUTHORIZED BY COMPAL ELECTRONICS, INC. NEITHER THIS SHEET NOR THE INFORMATION IT CONTAINS MAY BE USED BY OR DISCLOSED TO ANY THIRD PARTY WITHOUT PRIOR WRITTEN CONSENT OF COMPAL ELECTRONICS, INC.

Compal Electronics, Inc.

Title: **PCI7412**

Size: Custom | Document Number: LA-2841 | Rev: 1.0

Date: Thursday, December 15, 2005 | Sheet 33 of 60

Express Card Power Switch

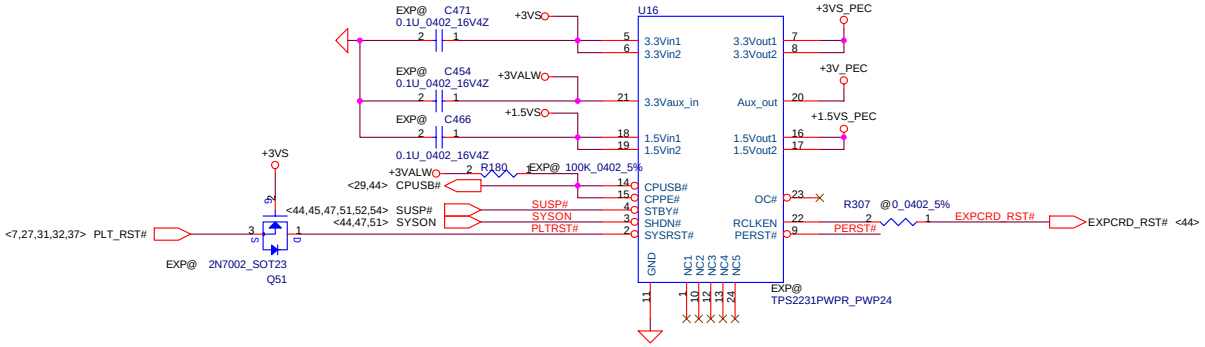

close to JP36

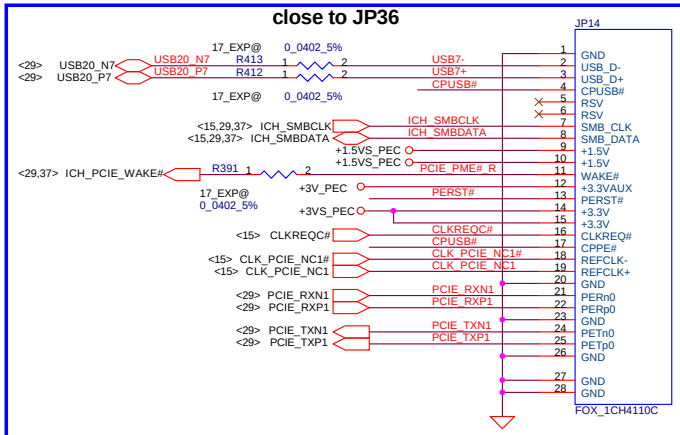

Near to Express Card slot. 17

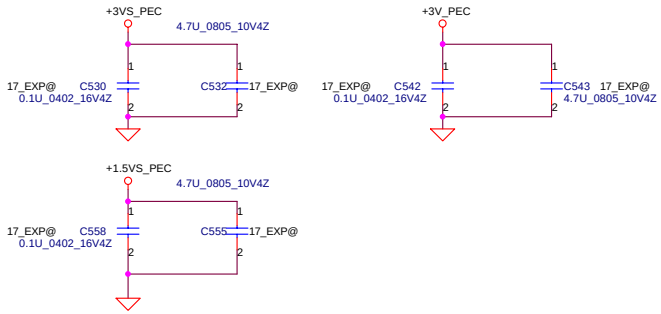

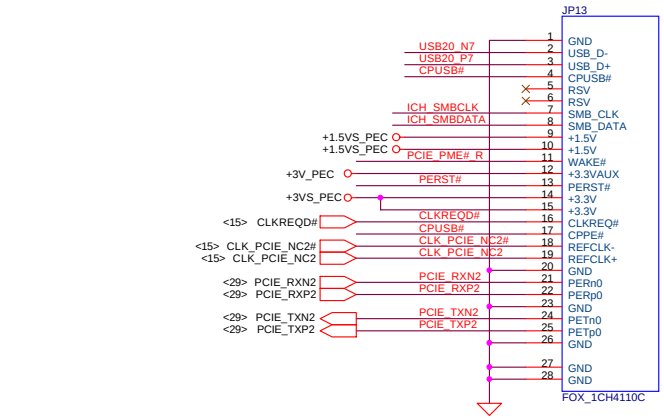

Near to Express Card slot. 15.4

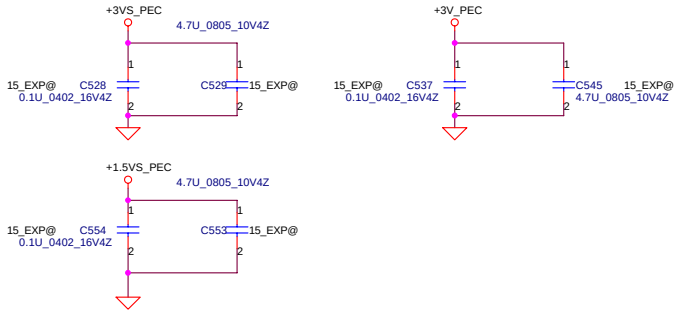

Security Classification	Compal Secret Data		
Issued Date	2005/03/10	Deciphered Date	2006/03/10

THIS SHEET OF ENGINEERING DRAWING IS THE PROPRIETARY PROPERTY OF COMPAL ELECTRONICS, INC. AND CONTAINS CONFIDENTIAL AND TRADE SECRET INFORMATION. THIS SHEET MAY NOT BE TRANSFERED FROM THE CUSTODY OF THE COMPETENT DIVISION OF R&D DEPARTMENT EXCEPT AS AUTHORIZED BY COMPAL ELECTRONICS, INC. NEITHER THIS SHEET NOR THE INFORMATION IT CONTAINS MAY BE USED BY OR DISCLOSED TO ANY THIRD PARTY WITHOUT PRIOR WRITTEN CONSENT OF COMPAL ELECTRONICS, INC.

Compal Electronics, Inc.

Title: **Express Card**

Size: Custom | Document Number: LA-2841 | Rev: 1.0

Date: Thursday, December 15, 2005 | Sheet 34 of 60

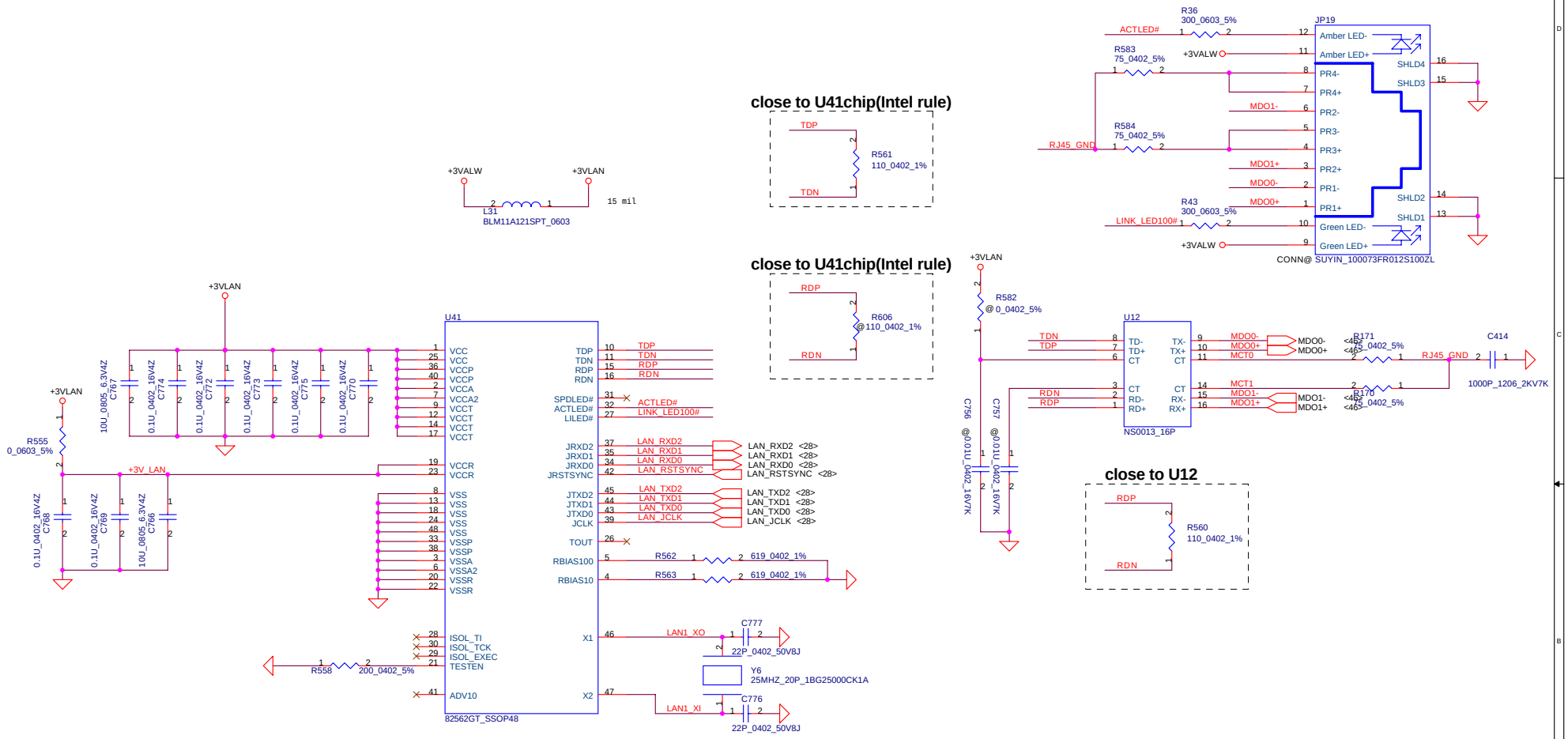

Security Classification	Compal Secret Data		
Issued Date	2005/03/10	Deciphered Date	2006/03/10

THIS SHEET OF ENGINEERING DRAWING IS THE PROPRIETARY PROPERTY OF COMPAL ELECTRONICS, INC. AND CONTAINS CONFIDENTIAL AND TRADE SECRET INFORMATION. THIS SHEET MAY NOT BE TRANSFERED FROM THE CUSTODY OF THE COMPETENT DIVISION OF R&D DEPARTMENT EXCEPT AS AUTHORIZED BY COMPAL ELECTRONICS, INC. NEITHER THIS SHEET NOR THE INFORMATION IT CONTAINS MAY BE USED BY OR DISCLOSED TO ANY THIRD PARTY WITHOUT PRIOR WRITTEN CONSENT OF COMPAL ELECTRONICS, INC.

Compal Electronics, Inc.

Title: **82562EZ LAN**

Size: Custom | Document Number: *LA-2841* | Rev: 1.0

Date: Thursday, December 15, 2005 | Sheet 35 of 60

Port 80 Debug Card Connector

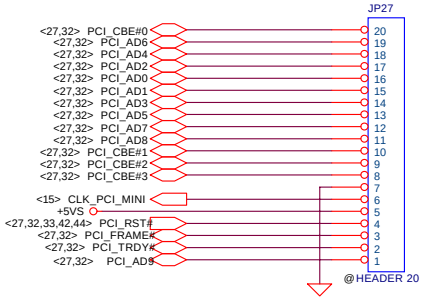

Security Classification	Compal Secret Data		
Issued Date	2005/03/10	Deciphered Date	2006/03/10

THIS SHEET OF ENGINEERING DRAWING IS THE PROPRIETARY PROPERTY OF COMPAL ELECTRONICS, INC. AND CONTAINS CONFIDENTIAL AND TRADE SECRET INFORMATION. THIS SHEET MAY NOT BE TRANSFERED FROM THE CUSTODY OF THE COMPETENT DIVISION OF R&D DEPARTMENT EXCEPT AS AUTHORIZED BY COMPAL ELECTRONICS, INC. NEITHER THIS SHEET NOR THE INFORMATION IT CONTAINS MAY BE USED BY OR DISCLOSED TO ANY THIRD PARTY WITHOUT PRIOR WRITTEN CONSENT OF COMPAL ELECTRONICS, INC.

Compal Electronics, Inc.

Title: **Debug port**

Size: Custom | Document Number: **LA-2841** | Rev: 1.0

Date: Thursday, December 15, 2005 | Sheet 36 of 60

Mini-Express Card(Slot 1-WLAN)

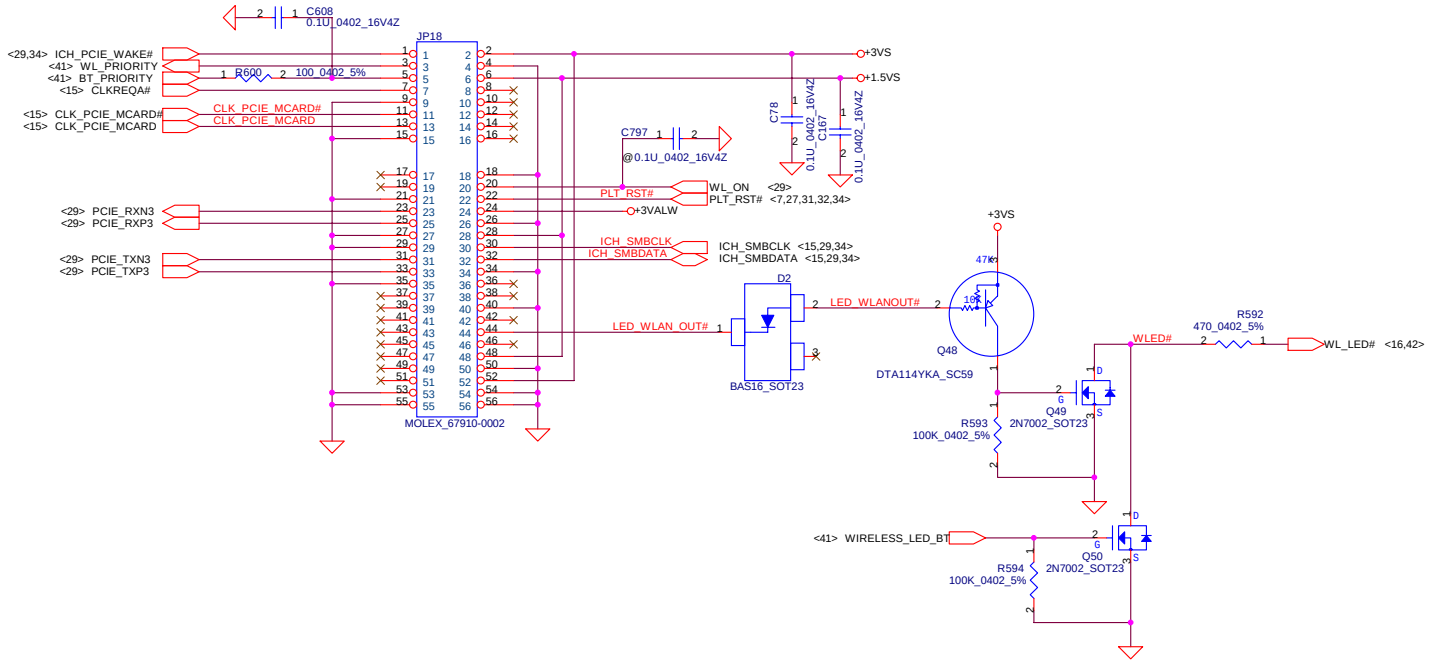

Security Classification	Compal Secret Data		
Issued Date	2005/03/10	Deciphered Date	2006/03/10

THIS SHEET OF ENGINEERING DRAWING IS THE PROPRIETARY PROPERTY OF COMPAL ELECTRONICS, INC. AND CONTAINS CONFIDENTIAL AND TRADE SECRET INFORMATION. THIS SHEET MAY NOT BE TRANSFERED FROM THE CUSTODY OF THE COMPETENT DIVISION OF R&D DEPARTMENT EXCEPT AS AUTHORIZED BY COMPAL ELECTRONICS, INC. NEITHER THIS SHEET NOR THE INFORMATION IT CONTAINS MAY BE USED BY OR DISCLOSED TO ANY THIRD PARTY WITHOUT PRIOR WRITTEN CONSENT OF COMPAL ELECTRONICS, INC.

Compal Electronics, Inc.

Title: **Mini Card**

Size: Custom | Document Number: *LA-2841* | Rev: 1.0

Date: Thursday, December 15, 2005 | Sheet 37 of 60

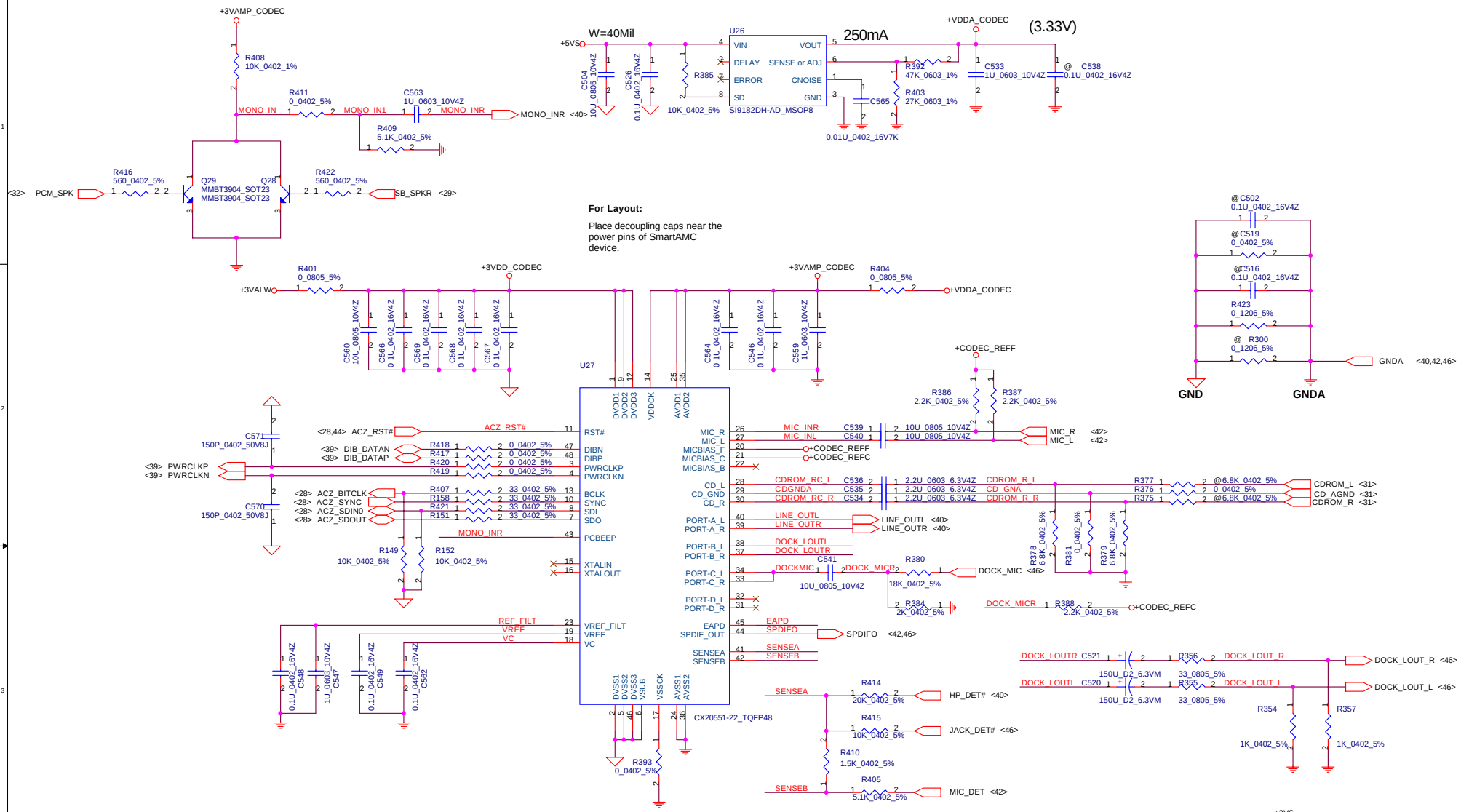

HP_DET#	JACK_DET#	PORT-A	PORT-B	EQ
0	0	ON	OFF	Disable
0	NC	ON	OFF	Disable
NC	0	OFF	ON	Disable
NC	NC	ON	OFF	Enable

MIC_DET	PORT-C	PORT-F
0	ON	OFF
NC	OFF	ON

Security Classification	Compal Secret Data		
Issued Date	2005/03/10	Deciphered Date	2006/03/10

THIS SHEET OF ENGINEERING DRAWING IS THE PROPRIETARY PROPERTY OF COMPAL ELECTRONICS, INC. AND CONTAINS CONFIDENTIAL AND TRADE SECRET INFORMATION. THIS SHEET MAY NOT BE TRANSFERED FROM THE CUSTODY OF THE COMPETENT DIVISION OF R&D DEPARTMENT EXCEPT AS AUTHORIZED BY COMPAL ELECTRONICS, INC. NEITHER THIS SHEET NOR THE INFORMATION IT CONTAINS MAY BE USED BY OR DISCLOSED TO ANY THIRD PARTY WITHOUT PRIOR WRITTEN CONSENT OF COMPAL ELECTRONICS, INC.

Compal Electronics, Inc.

Title: **AMOM_codec**

Size: Custom | Document Number: LA-2841 | Rev: 1.0

Date: Thursday, December 15, 2005 | Sheet 38 of 60

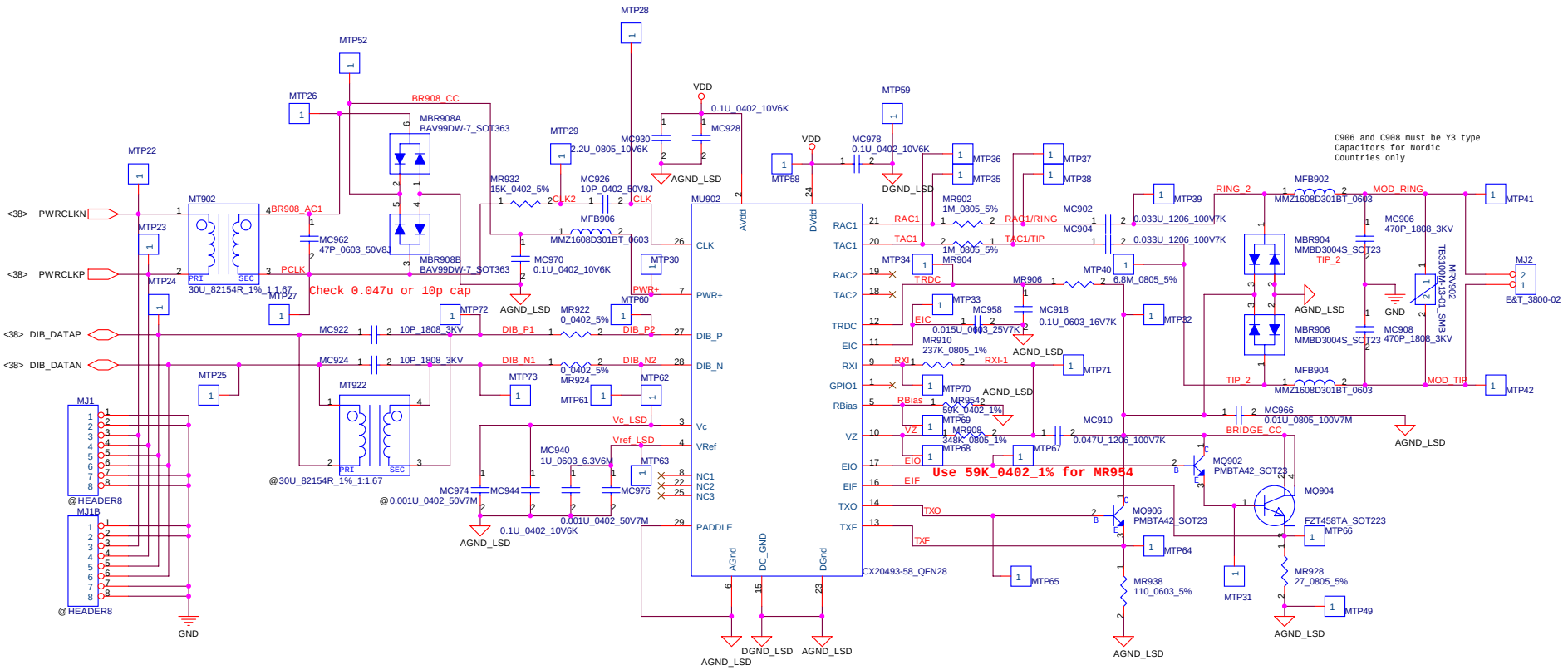

Security Classification	Compal Secret Data		
Issued Date	2005/03/10	Deciphered Date	2006/03/10

THIS SHEET OF ENGINEERING DRAWING IS THE PROPRIETARY PROPERTY OF COMPAL ELECTRONICS, INC. AND CONTAINS CONFIDENTIAL AND TRADE SECRET INFORMATION. THIS SHEET MAY NOT BE TRANSFERED FROM THE CUSTODY OF THE COMPETENT DIVISION OF R&D DEPARTMENT EXCEPT AS AUTHORIZED BY COMPAL ELECTRONICS, INC. NEITHER THIS SHEET NOR THE INFORMATION IT CONTAINS MAY BE USED BY OR DISCLOSED TO ANY THIRD PARTY WITHOUT PRIOR WRITTEN CONSENT OF COMPAL ELECTRONICS, INC.

Compal Electronics, Inc.

Title: **AMOM_modem**

Size: Custom | Document Number: **LA-2841** | Rev: 1.0

Date: Thursday, December 15, 2005 | Sheet 39 of 60

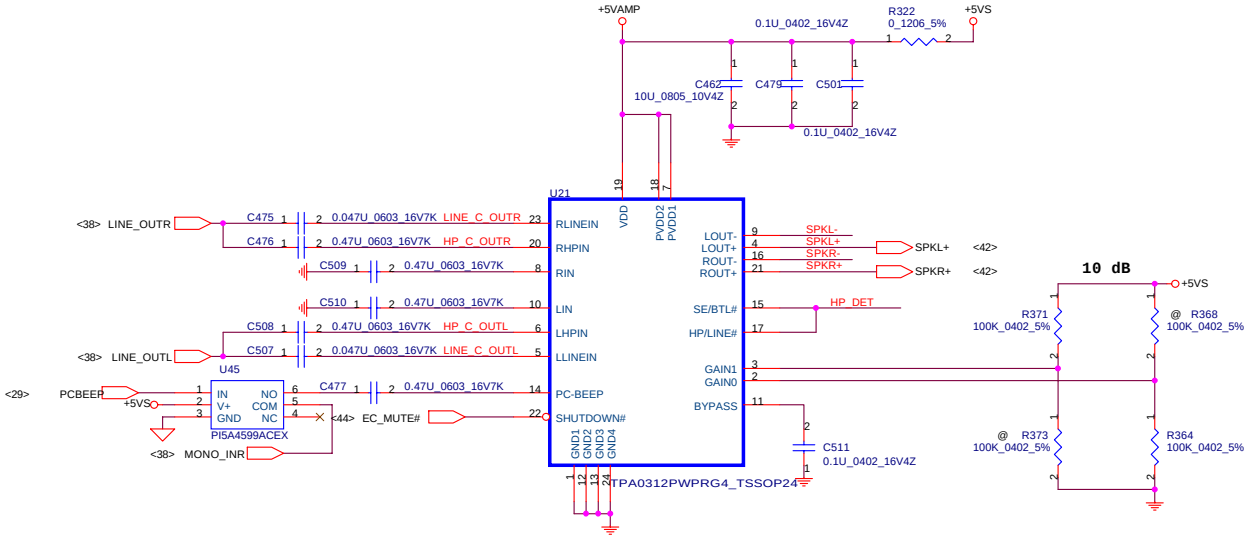

HEADPHONE OUT/LINE OUT

Gain Settings			
GAIN0	GAIN1	SE/BTL#	Av(inv)
0	0	0	6 dB
0	1	0	* 10 dB
1	0	0	15.6 dB
1	1	0	21.6 dB
X	X	1	4.1 dB

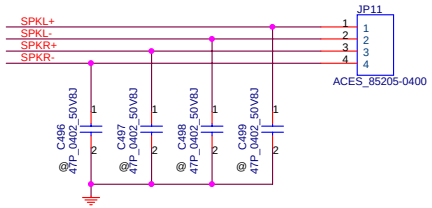

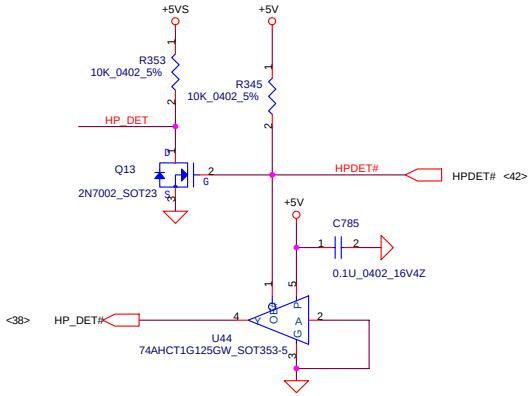

Security Classification	Compal Secret Data		
Issued Date	2005/03/10	Deciphered Date	2006/03/10

THIS SHEET OF ENGINEERING DRAWING IS THE PROPRIETARY PROPERTY OF COMPAL ELECTRONICS, INC. AND CONTAINS CONFIDENTIAL AND TRADE SECRET INFORMATION. THIS SHEET MAY NOT BE TRANSFERED FROM THE CUSTODY OF THE COMPETENT DIVISION OF R&D DEPARTMENT EXCEPT AS AUTHORIZED BY COMPAL ELECTRONICS, INC. NEITHER THIS SHEET NOR THE INFORMATION IT CONTAINS MAY BE USED BY OR DISCLOSED TO ANY THIRD PARTY WITHOUT PRIOR WRITTEN CONSENT OF COMPAL ELECTRONICS, INC.

Compal Electronics, Inc.

Title: **AMP & Audio Jack**

Size: Custom | Document Number: LA-2841 | Rev: 1.0

Date: Thursday, December 15, 2005 | Sheet 40 of 60

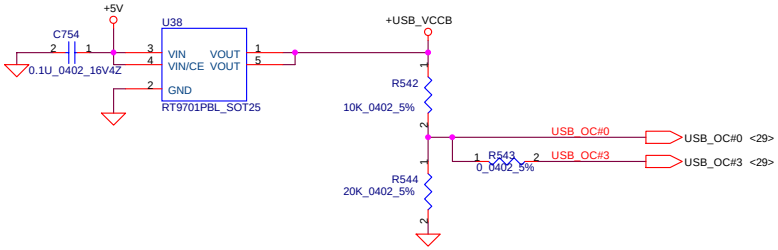

USB CONNECTOR (Left side)

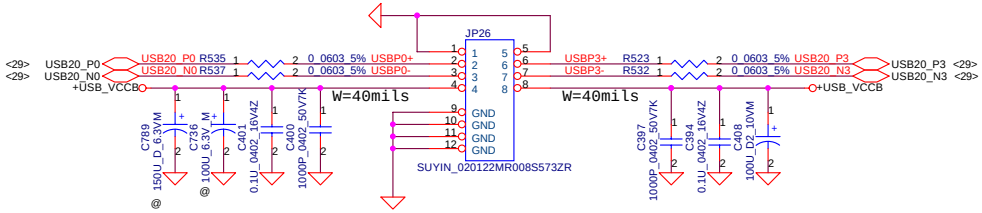

BT CONNECTOR

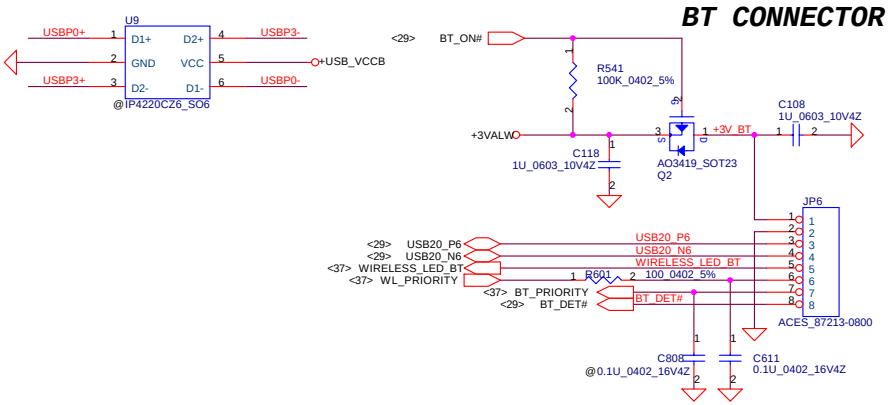

Security Classification	Compal Secret Data		
Issued Date	2005/03/10	Deciphered Date	2006/03/10

THIS SHEET OF ENGINEERING DRAWING IS THE PROPRIETARY PROPERTY OF COMPAL ELECTRONICS, INC. AND CONTAINS CONFIDENTIAL AND TRADE SECRET INFORMATION. THIS SHEET MAY NOT BE TRANSFERED FROM THE CUSTODY OF THE COMPETENT DIVISION OF R&D DEPARTMENT EXCEPT AS AUTHORIZED BY COMPAL ELECTRONICS, INC. NEITHER THIS SHEET NOR THE INFORMATION IT CONTAINS MAY BE USED BY OR DISCLOSED TO ANY THIRD PARTY WITHOUT PRIOR WRITTEN CONSENT OF COMPAL ELECTRONICS, INC.

Compal Electronics, Inc.

Title: **Bluetooth & USB CONN.**

Size: Custom | Document Number: LA-2841 | Rev: 1.0

Date: Thursday, December 15, 2005 | Sheet 41 of 60

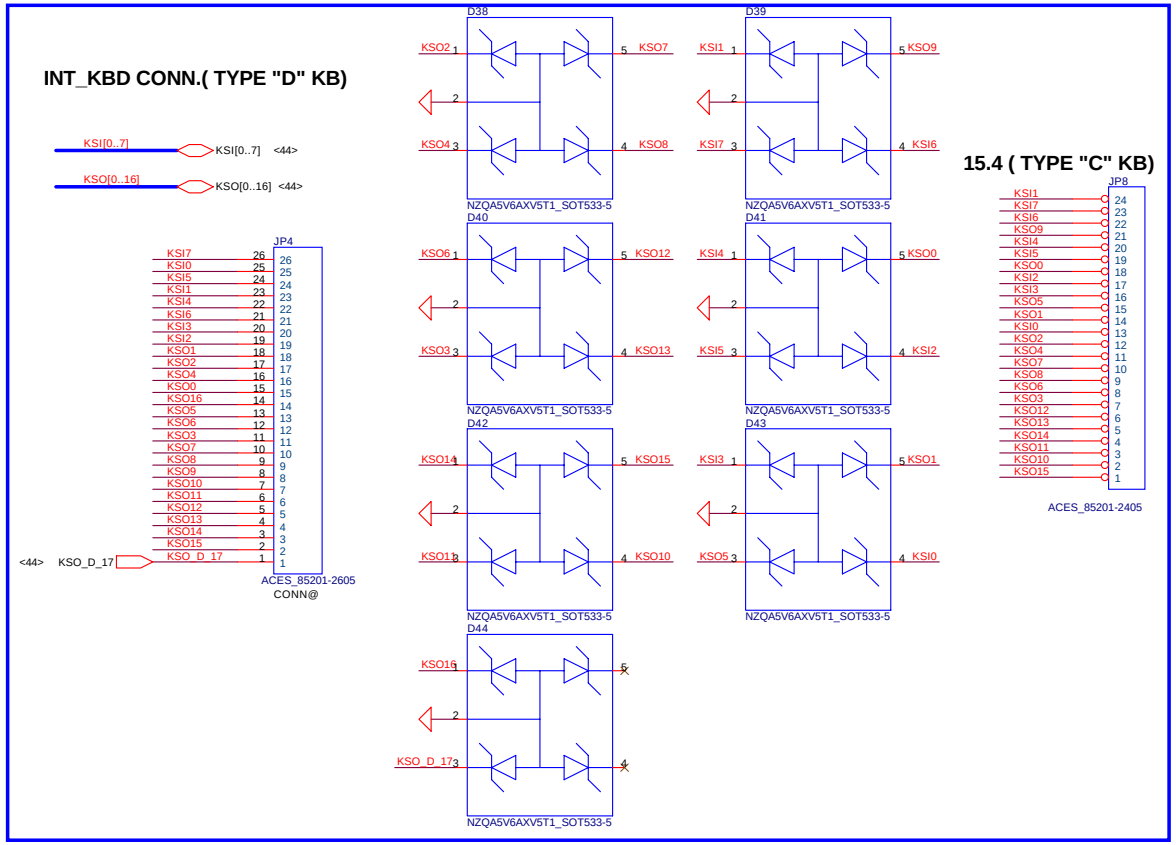

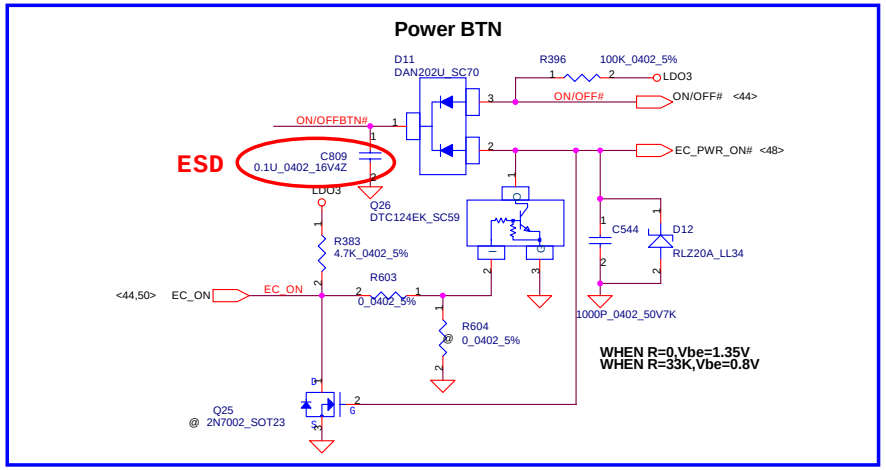

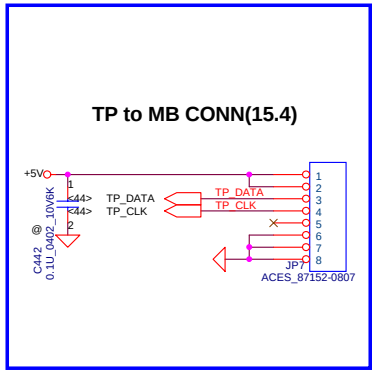

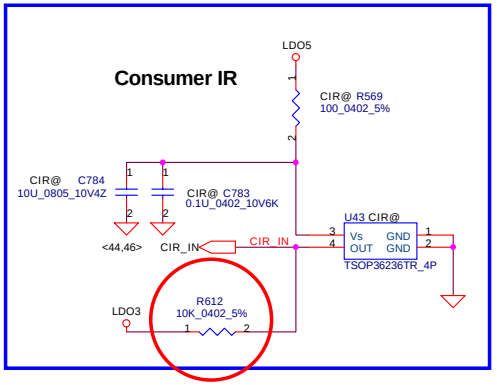

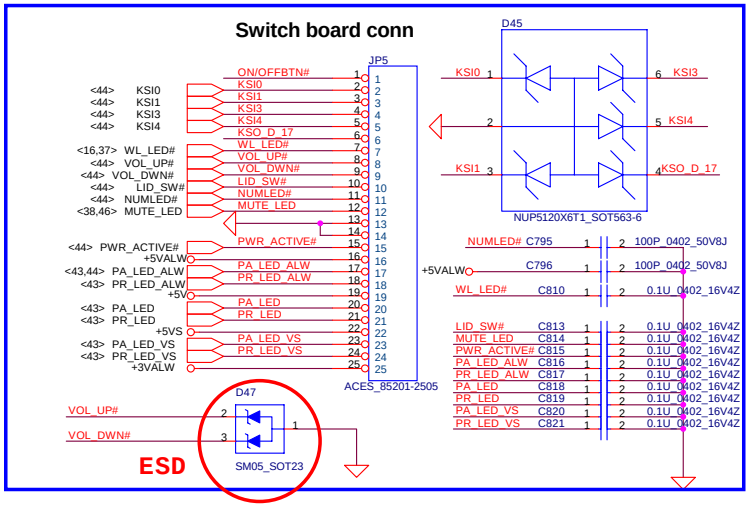

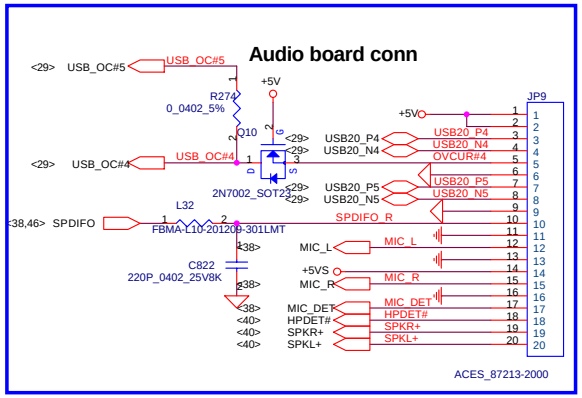

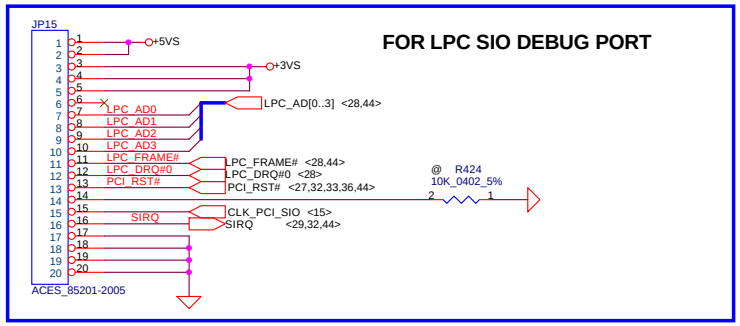

Security Classification	Compal Secret Data		
Issued Date	2005/03/10	Deciphered Date	2006/03/10

THIS SHEET OF ENGINEERING DRAWING IS THE PROPRIETARY PROPERTY OF COMPAL ELECTRONICS, INC. AND CONTAINS CONFIDENTIAL AND TRADE SECRET INFORMATION. THIS SHEET MAY NOT BE TRANSFERED FROM THE CUSTODY OF THE COMPETENT DIVISION OF R&D DEPARTMENT EXCEPT AS AUTHORIZED BY COMPAL ELECTRONICS, INC. NEITHER THIS SHEET NOR THE INFORMATION IT CONTAINS MAY BE USED BY OR DISCLOSED TO ANY THIRD PARTY WITHOUT PRIOR WRITTEN CONSENT OF COMPAL ELECTRONICS, INC.

Compal Electronics, Inc.

Title: **KBD,ON/OFF,T/P,LED/B,DEBUG**

Size: Custom | Document Number: LA-2841 | Rev: 1.0

Date: Thursday, December 15, 2005 | Sheet 42 of 60

For PA

FOR POWER BUTTON BACKLIGHT SYSTEM POWER

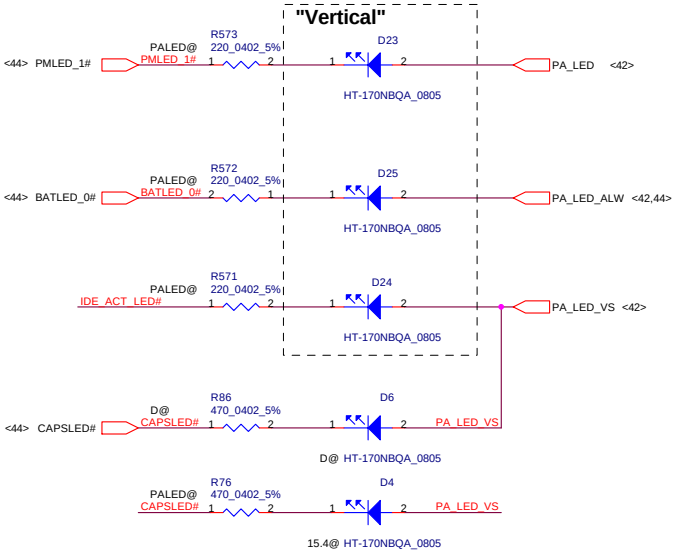

For PR

FOR POWER BUTTON BACKLIGHT SYSTEM POWER

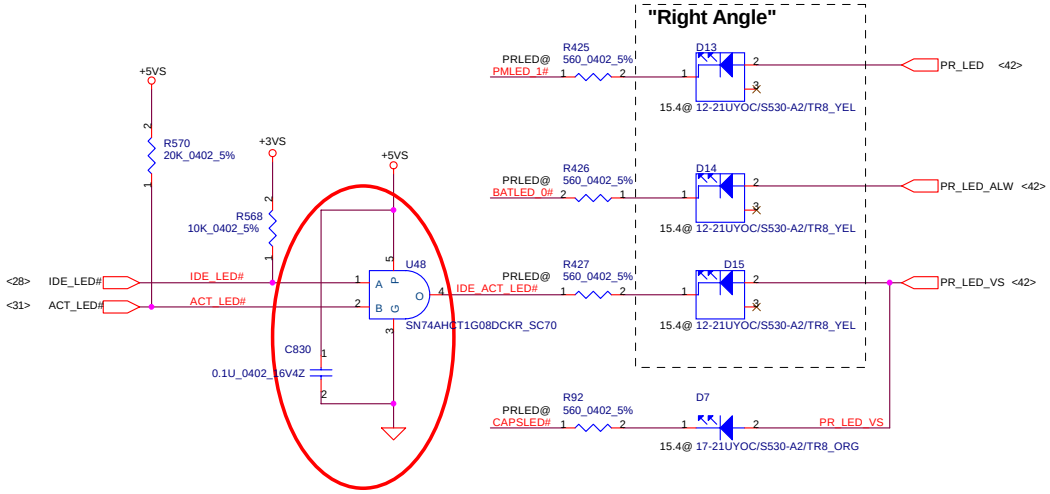

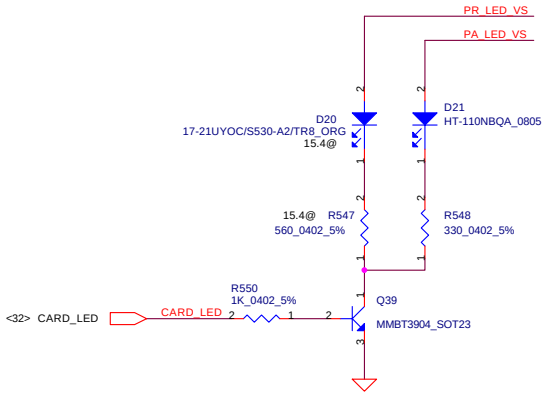

Security Classification	Compal Secret Data		
Issued Date	2005/03/10	Deciphered Date	2006/03/10

THIS SHEET OF ENGINEERING DRAWING IS THE PROPRIETARY PROPERTY OF COMPAL ELECTRONICS, INC. AND CONTAINS CONFIDENTIAL AND TRADE SECRET INFORMATION. THIS SHEET MAY NOT BE TRANSFERED FROM THE CUSTODY OF THE COMPETENT DIVISION OF R&D DEPARTMENT EXCEPT AS AUTHORIZED BY COMPAL ELECTRONICS, INC. NEITHER THIS SHEET NOR THE INFORMATION IT CONTAINS MAY BE USED BY OR DISCLOSED TO ANY THIRD PARTY WITHOUT PRIOR WRITTEN CONSENT OF COMPAL ELECTRONICS, INC.

Compal Electronics, Inc.

Title: **INDICATE LED**

Size: Custom | Document Number: LA-2841 | Rev: 1.0

Date: Thursday, December 15, 2005 | Sheet 43 of 60

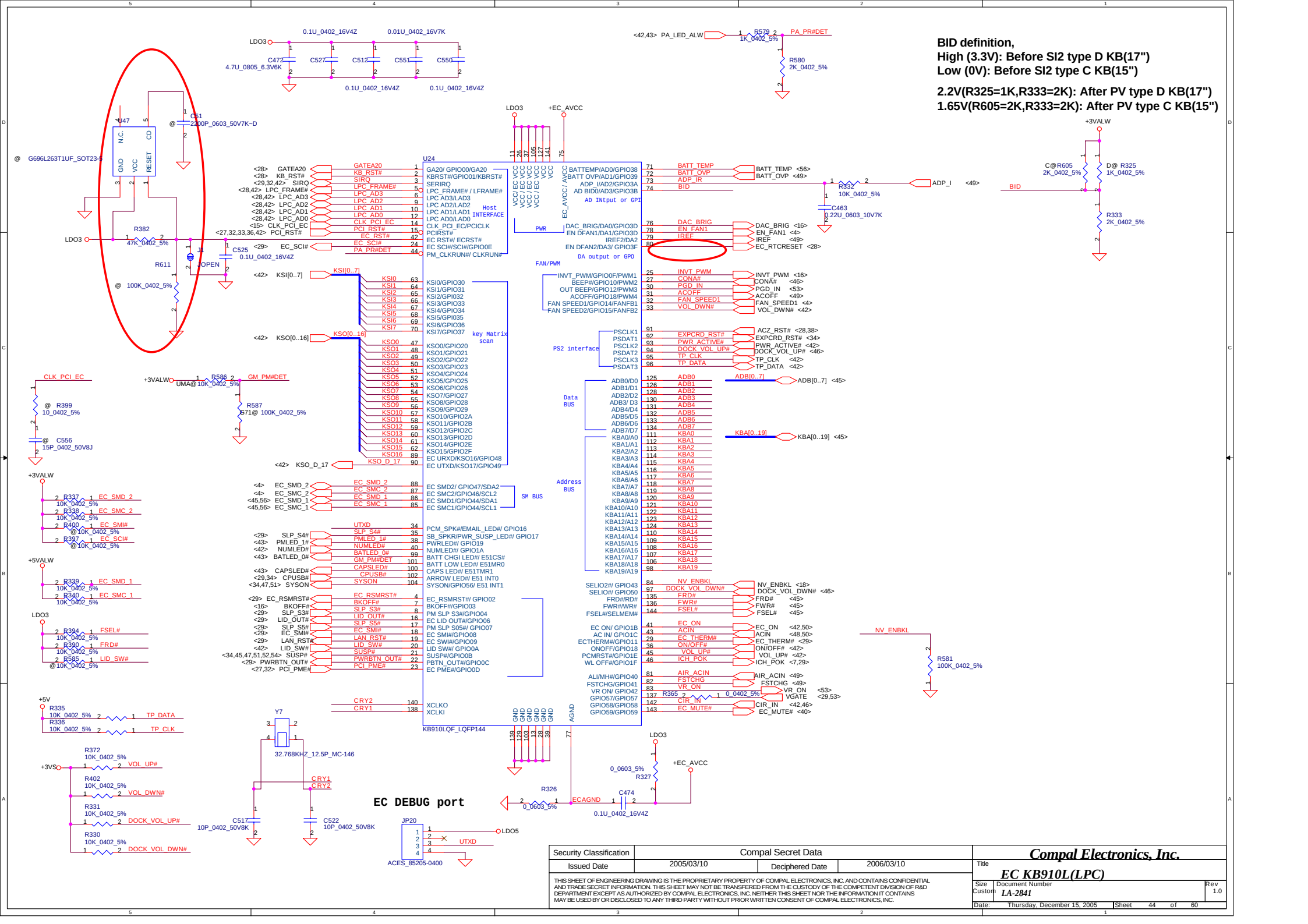
BID definition,
High (3.3V): Before SI2 type D KB(17")
Low (0V): Before SI2 type C KB(15")
2.2V(R325=1K,R333=2K): After PV type D KB(17")
1.65V(R605=2K,R333=2K): After PV type C KB(15")
U24
KB910LQF_LQFP144
EC DEBUG port
Compal Electronics, Inc.
EC KB910L(LPC)
Security Classification
Compal Secret Data
Issued Date
2005/03/10
Deciphered Date
2006/03/10
Document Number
LA-2841
Rev
1.0
Date: Thursday, December 15, 2005
Sheet 44 of 60

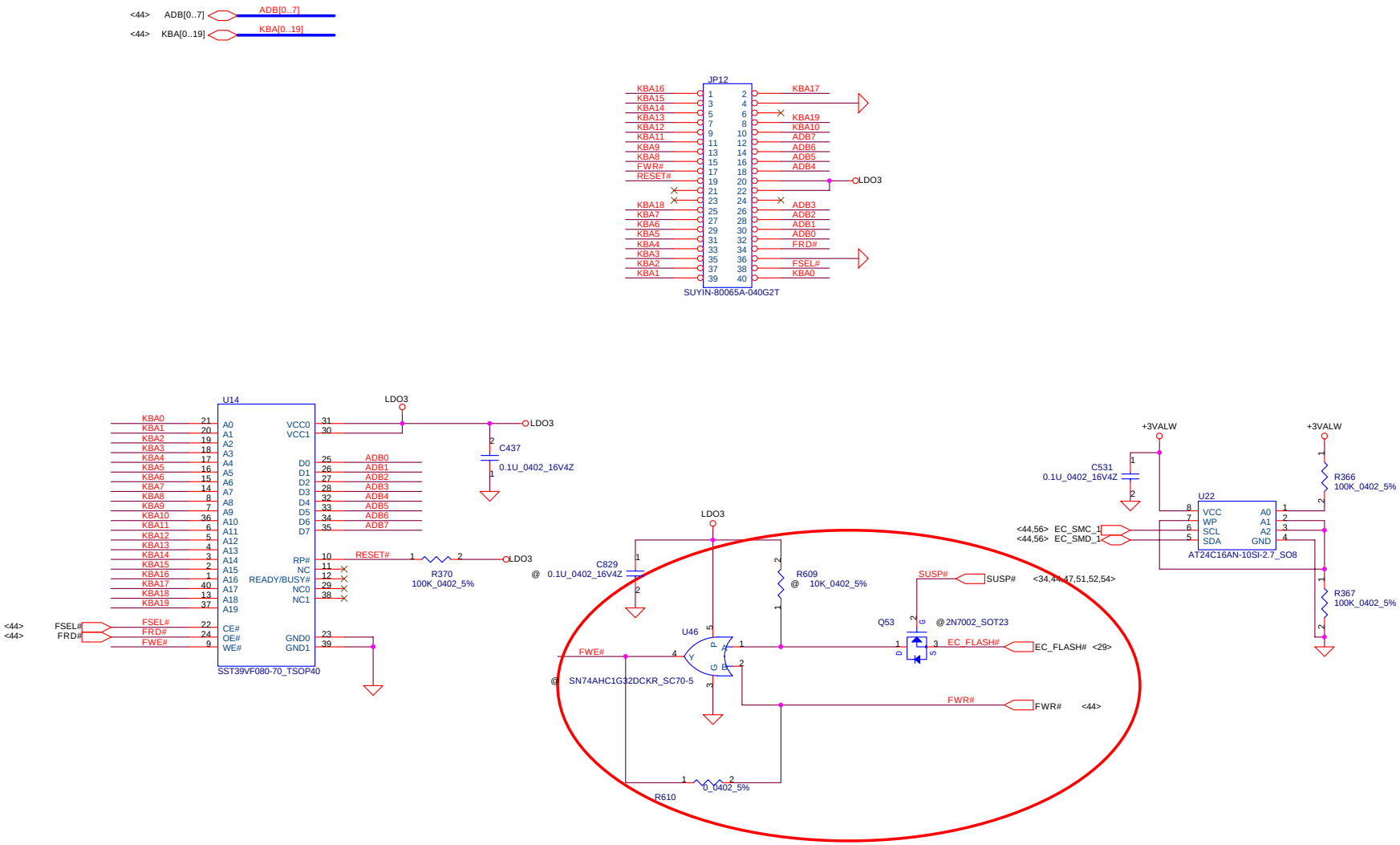

Security Classification	Compal Secret Data		
Issued Date	2005/03/10	Deciphered Date	2006/03/10

THIS SHEET OF ENGINEERING DRAWING IS THE PROPRIETARY PROPERTY OF COMPAL ELECTRONICS, INC. AND CONTAINS CONFIDENTIAL AND TRADE SECRET INFORMATION. THIS SHEET MAY NOT BE TRANSFERED FROM THE CUSTODY OF THE COMPETENT DIVISION OF R&D DEPARTMENT EXCEPT AS AUTHORIZED BY COMPAL ELECTRONICS, INC. NEITHER THIS SHEET NOR THE INFORMATION IT CONTAINS MAY BE USED BY OR DISCLOSED TO ANY THIRD PARTY WITHOUT PRIOR WRITTEN CONSENT OF COMPAL ELECTRONICS, INC.

Compal Electronics, Inc.

Title: **BIOS & EC I/O Port**

Size: Custom | Document Number: LA-2841 | Rev: 1.0

Date: Thursday, December 15, 2005 | Sheet 45 of 60

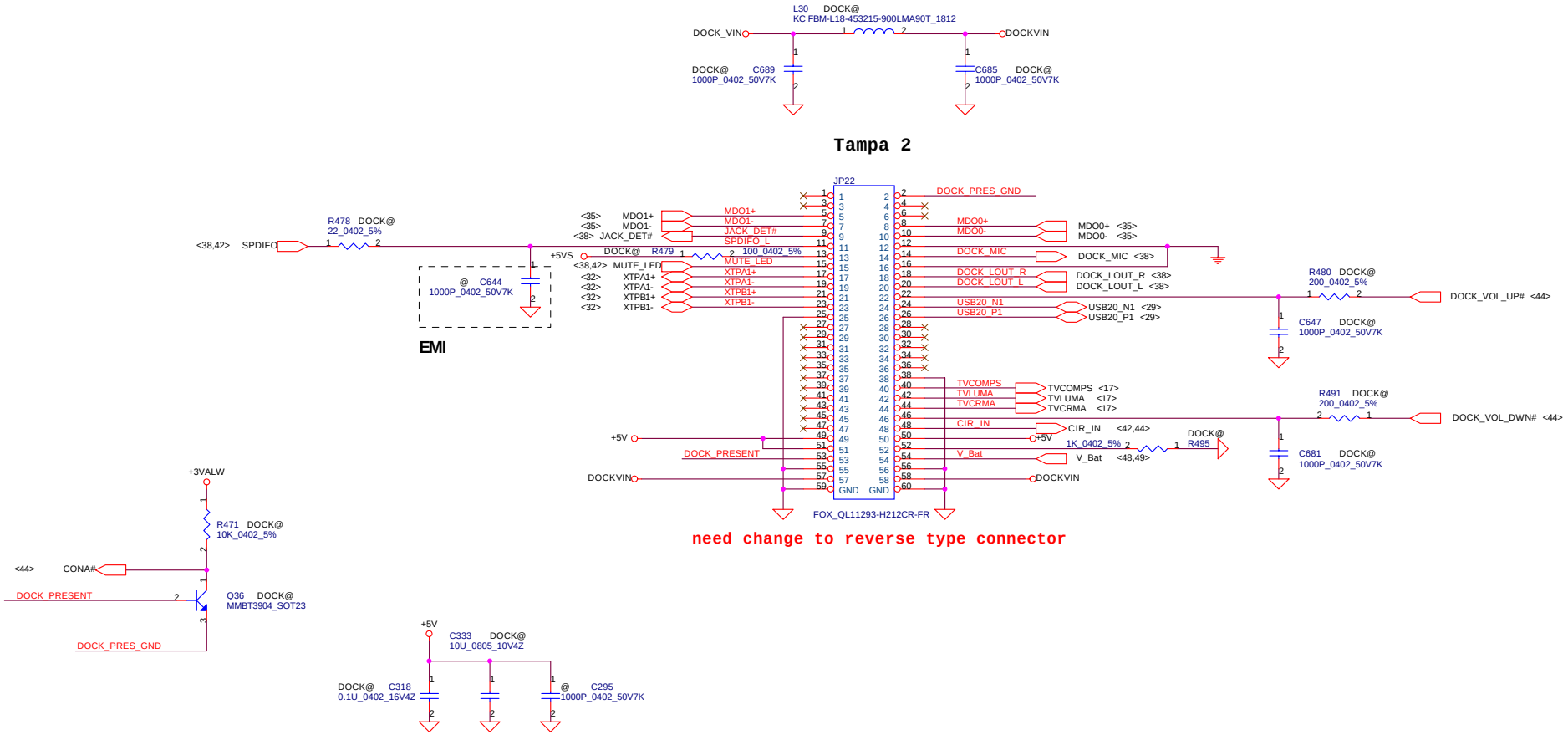

Security Classification	Compal Secret Data		
Issued Date	2005/03/10	Deciphered Date	2006/03/10

THIS SHEET OF ENGINEERING DRAWING IS THE PROPRIETARY PROPERTY OF COMPAL ELECTRONICS, INC. AND CONTAINS CONFIDENTIAL AND TRADE SECRET INFORMATION. THIS SHEET MAY NOT BE TRANSFERED FROM THE CUSTODY OF THE COMPETENT DIVISION OF R&D DEPARTMENT EXCEPT AS AUTHORIZED BY COMPAL ELECTRONICS, INC. NEITHER THIS SHEET NOR THE INFORMATION IT CONTAINS MAY BE USED BY OR DISCLOSED TO ANY THIRD PARTY WITHOUT PRIOR WRITTEN CONSENT OF COMPAL ELECTRONICS, INC.

Compal Electronics, Inc.

Title: **DOCK CONN**

Size: Custom | Document Number: *LA-2841* | Rev: 1.0

Date: Thursday, December 15, 2005 | Sheet 46 of 60

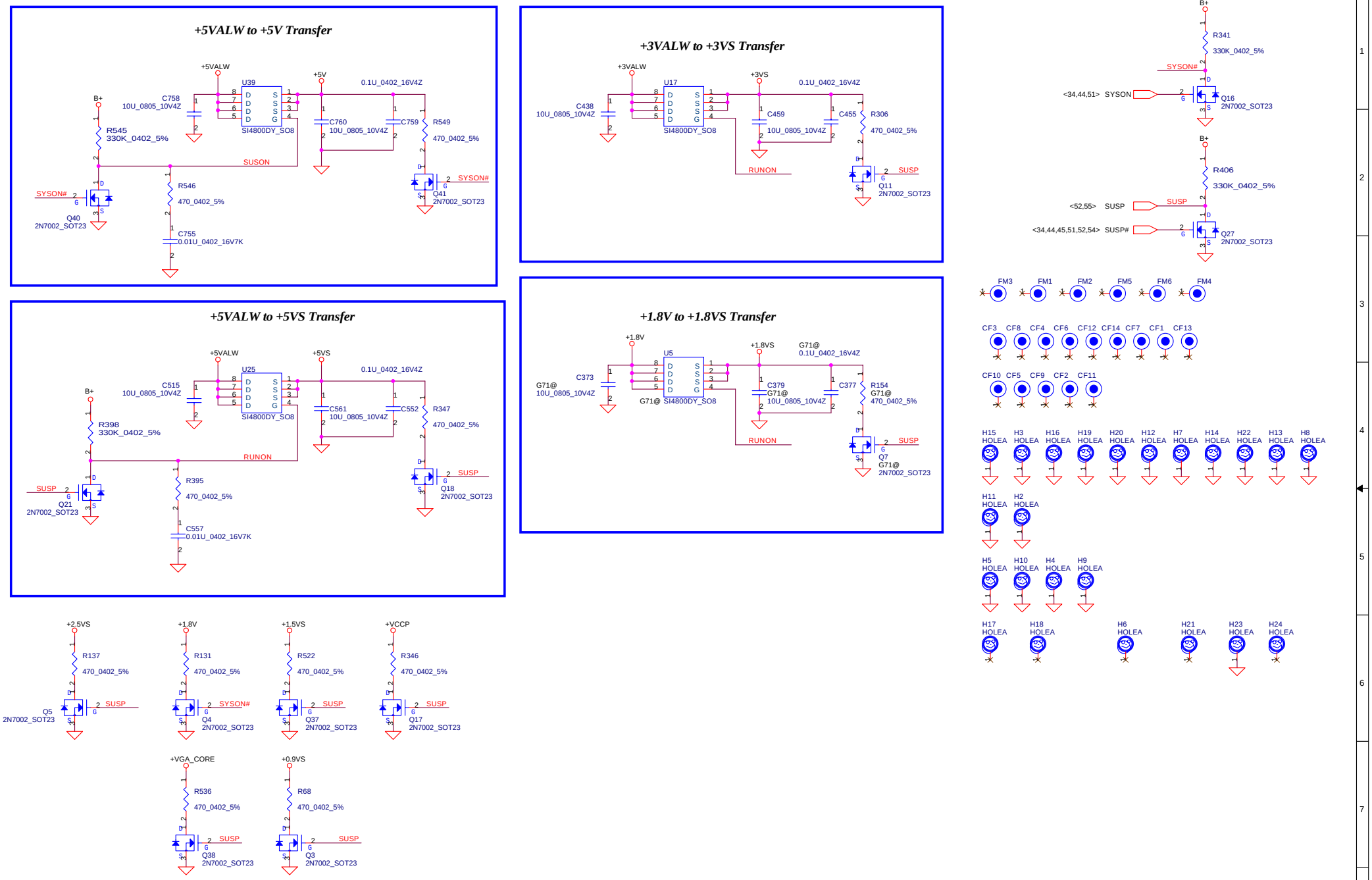

Security Classification	Compal Secret Data		
Issued Date	2005/03/10	Deciphered Date	2006/03/10

THIS SHEET OF ENGINEERING DRAWING IS THE PROPRIETARY PROPERTY OF COMPAL ELECTRONICS, INC. AND CONTAINS CONFIDENTIAL AND TRADE SECRET INFORMATION. THIS SHEET MAY NOT BE TRANSFERED FROM THE CUSTODY OF THE COMPETENT DIVISION OF R&D DEPARTMENT EXCEPT AS AUTHORIZED BY COMPAL ELECTRONICS, INC. NEITHER THIS SHEET NOR THE INFORMATION IT CONTAINS MAY BE USED BY OR DISCLOSED TO ANY THIRD PARTY WITHOUT PRIOR WRITTEN CONSENT OF COMPAL ELECTRONICS, INC.

Compal Electronics, Inc.

Title: **DC/DC Circuit**

Size: Custom | Document Number: LA-2841 | Rev: 1.0

Date: Thursday, December 15, 2005 | Sheet 47 of 60

Detector/Precharge

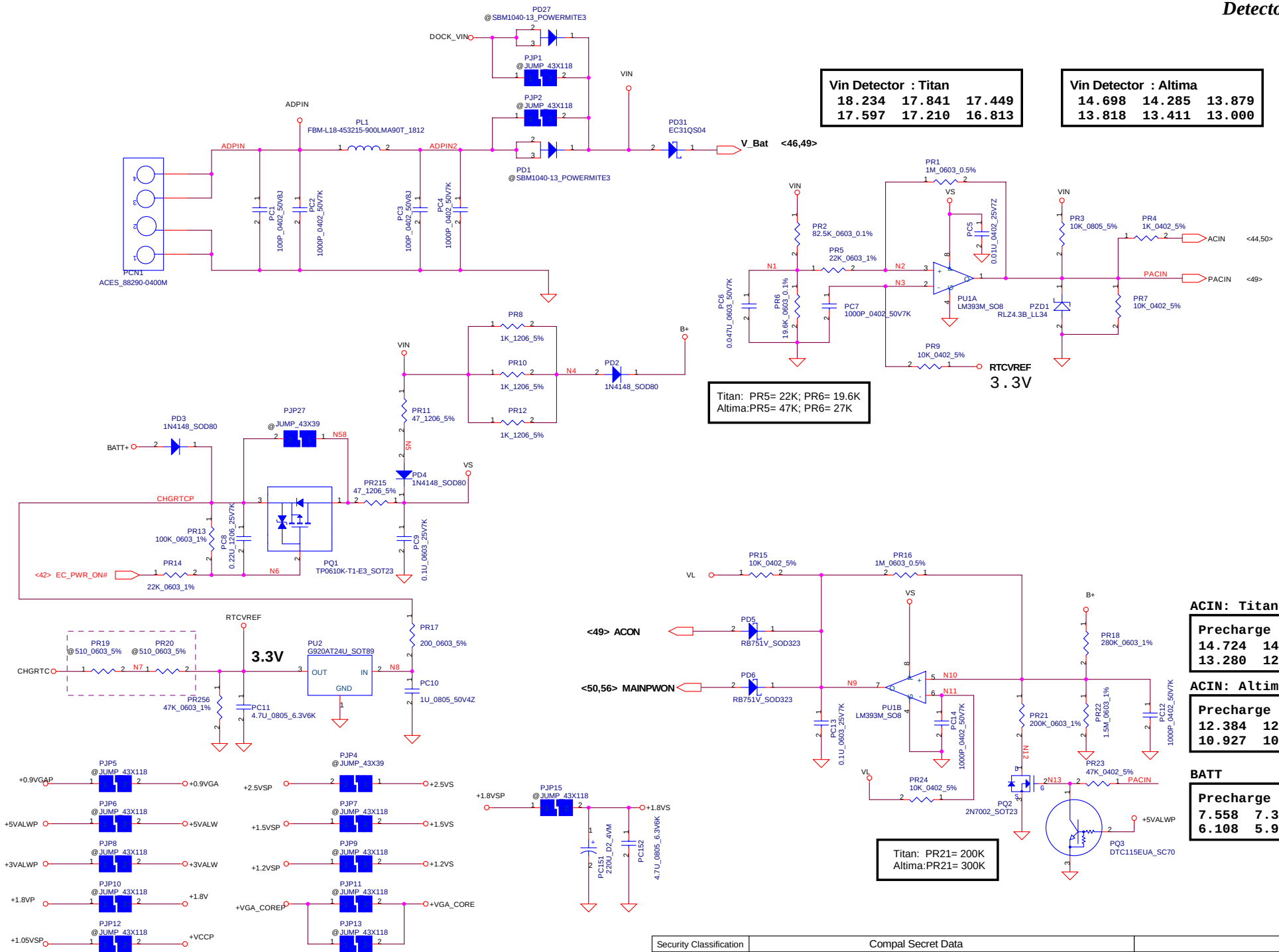

Vin Detector : Titan		
18.234	17.841	17.449
17.597	17.210	16.813

Vin Detector : Altima		
14.698	14.285	13.879
13.818	13.411	13.000

Titan: PR5= 22K; PR6= 19.6K
Altima:PR5= 47K; PR6= 27K

Titan: PR21= 200K
Altima:PR21= 300K

ACIN: Titan

Precharge detector		
14.724	14.333	13.945
13.280	12.933	12.531

ACIN: Altima

Precharge detector		
12.384	12.000	11.624
10.927	10.600	10.223

BATT

Precharge detector		
7.558	7.333	7.112
6.108	5.933	5.704

Security Classification	Compal Secret Data		
Issued Date	2005/03/22	Deciphered Date	2006/03/22

THIS SHEET OF ENGINEERING DRAWING IS THE PROPRIETARY PROPERTY OF COMPAL ELECTRONICS, INC. AND CONTAINS CONFIDENTIAL AND TRADE SECRET INFORMATION. THIS SHEET MAY NOT BE TRANSFERED FROM THE CUSTODY OF THE COMPETENT DIVISION OF R&D DEPARTMENT EXCEPT AS AUTHORIZED BY COMPAL ELECTRONICS, INC. NEITHER THIS SHEET NOR THE INFORMATION IT CONTAINS MAY BE USED BY OR DISCLOSED TO ANY THIRD PARTY WITHOUT PRIOR WRITTEN CONSENT OF COMPAL ELECTRONICS, INC.

Title: **DCIN / Precharge**

Size: Custom | Document Number: LA-2841 | Rev: 1.0

Date: Thursday, December 15, 2005 | Sheet 48 of 60

Charger

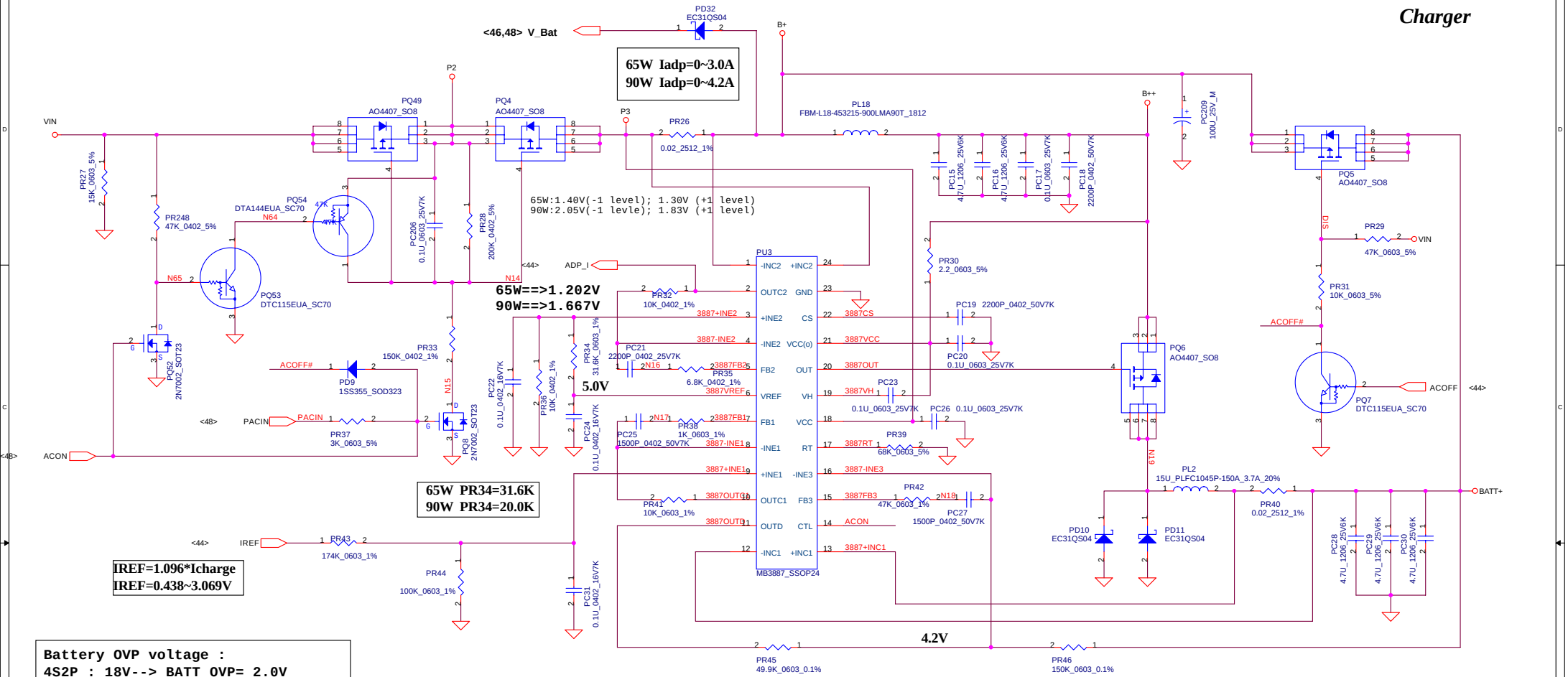

Battery OVP voltage :
4S2P : 18V--> BATT_OVP= 2.0V
(BAT_OVP=0.1112*VMB)

3S2P/3S4P : 13.5V--> BATT_OVP= 2.0V
(BAT_OVP=0.14753 *BATT+)

CC=0.4~2.8A
BATT_Charge Voltage Select
4S2P CV=16.8V PR45 = 49.9K_0603_0.1% PR46 =150K_0603_0.1%
3S2P/3S4P CV=12.6V PR45 = 150K_0603_0.1% PR46=300K_0603_0.1%

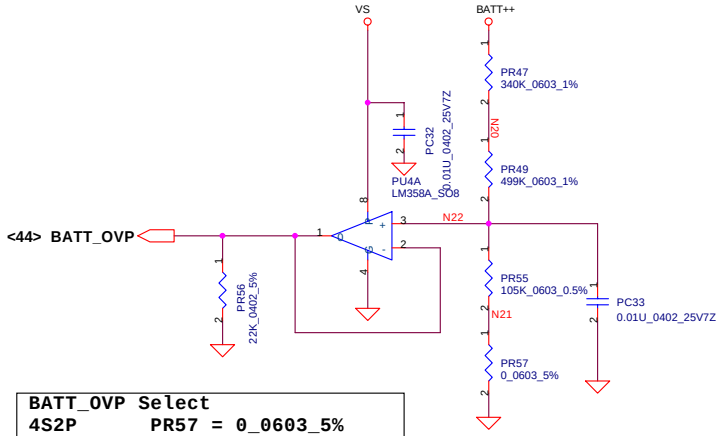

BATT_OVP Select
4S2P PR57 = 0_0603_5%
3S2P/3S4P PR57 = 40.2K_0603_1%

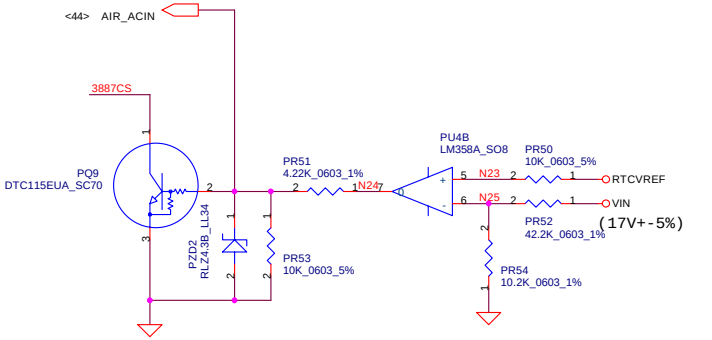

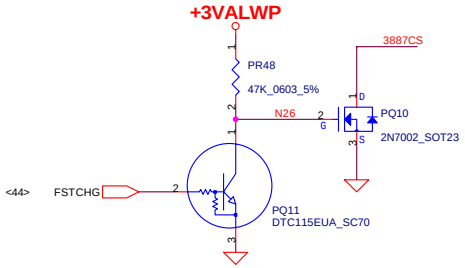

Security Classification	Compal Secret Data		
Issued Date	2005/03/22	Deciphered Date	2006/03/22

THIS SHEET OF ENGINEERING DRAWING IS THE PROPRIETARY PROPERTY OF COMPAL ELECTRONICS, INC. AND CONTAINS CONFIDENTIAL AND TRADE SECRET INFORMATION. THIS SHEET MAY NOT BE TRANSFERED FROM THE CUSTODY OF THE COMPETENT DIVISION OF R&D DEPARTMENT EXCEPT AS AUTHORIZED BY COMPAL ELECTRONICS, INC. NEITHER THIS SHEET NOR THE INFORMATION IT CONTAINS MAY BE USED BY OR DISCLOSED TO ANY THIRD PARTY WITHOUT PRIOR WRITTEN CONSENT OF COMPAL ELECTRONICS, INC.

Title: Charger
Size: Custom | Document Number: LA-2841 | Rev: 1.0
Date: Thursday, December 15, 2005 | Sheet 49 of 60

+3.3VALWP/+5VALWP

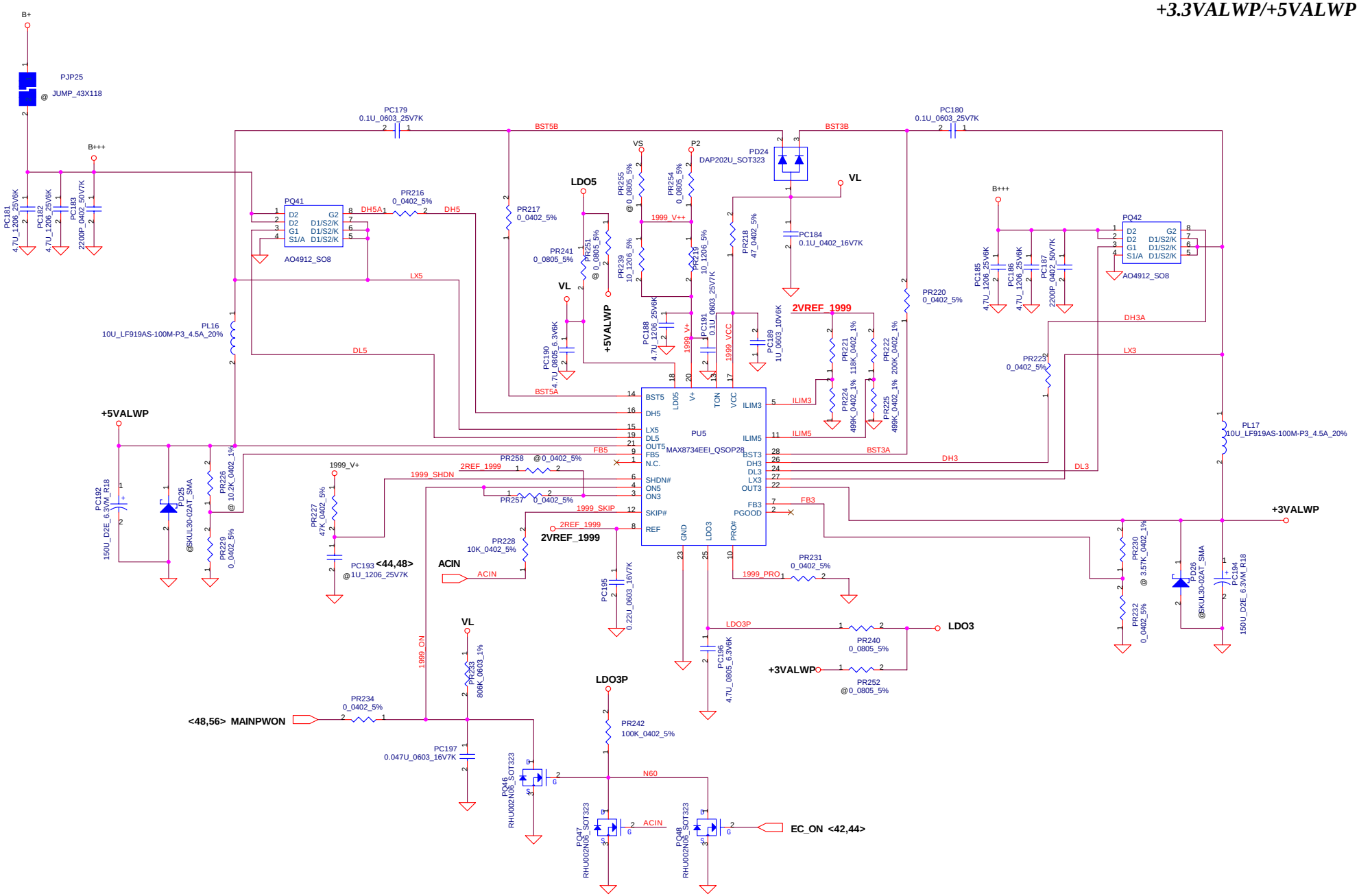

Security Classification	Compal Secret Data		
Issued Date	2005/03/22	Deciphered Date	2006/03/22

THIS SHEET OF ENGINEERING DRAWING IS THE PROPRIETARY PROPERTY OF COMPAL ELECTRONICS, INC. AND CONTAINS CONFIDENTIAL AND TRADE SECRET INFORMATION. THIS SHEET MAY NOT BE TRANSFERED FROM THE CUSTODY OF THE COMPETENT DIVISION OF R&D DEPARTMENT EXCEPT AS AUTHORIZED BY COMPAL ELECTRONICS, INC. NEITHER THIS SHEET NOR THE INFORMATION IT CONTAINS MAY BE USED BY OR DISCLOSED TO ANY THIRD PARTY WITHOUT PRIOR WRITTEN CONSENT OF COMPAL ELECTRONICS, INC.

Title: +3V/+5V

Size	Document Number	Rev
Custom	LA-2841	1.0

Date: Thursday, December 15, 2005 | Sheet 50 of 60

+1.8VP/+1.5VALWP/+2.5VS

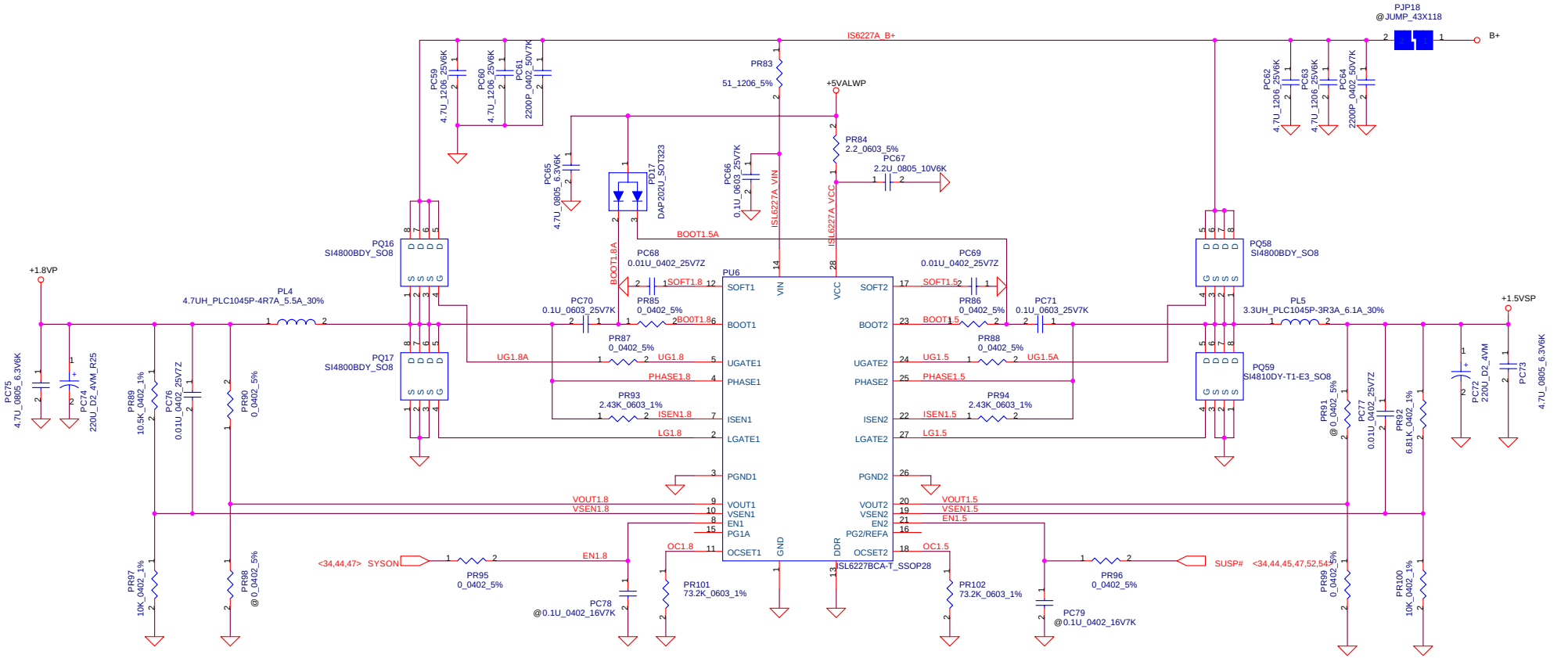

(400mA,40mils ,Via NO.= 1)

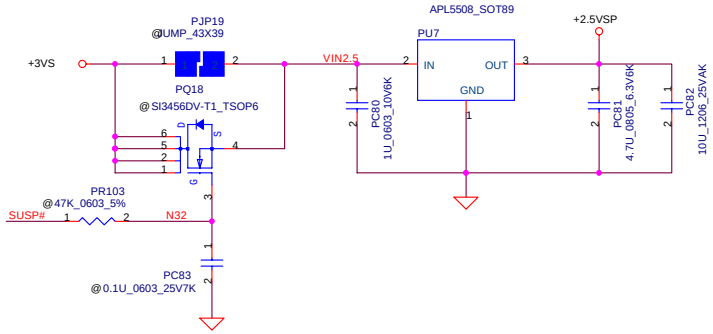

Security Classification	Compal Secret Data		
Issued Date	2005/03/22	Deciphered Date	2006/03/22

THIS SHEET OF ENGINEERING DRAWING IS THE PROPRIETARY PROPERTY OF COMPAL ELECTRONICS, INC. AND CONTAINS CONFIDENTIAL AND TRADE SECRET INFORMATION. THIS SHEET MAY NOT BE TRANSFERED FROM THE CUSTODY OF THE COMPETENT DIVISION OF R&D DEPARTMENT EXCEPT AS AUTHORIZED BY COMPAL ELECTRONICS, INC. NEITHER THIS SHEET NOR THE INFORMATION IT CONTAINS MAY BE USED BY OR DISCLOSED TO ANY THIRD PARTY WITHOUT PRIOR WRITTEN CONSENT OF COMPAL ELECTRONICS, INC.

Title: **1.8V/1.5V/2.5V**

Size: Custom | Document Number: LA-2841 | Rev: 1.0

Date: Thursday, December 15, 2005 | Sheet 51 of 60

+1.05V_VCCPP/+0.9VSP

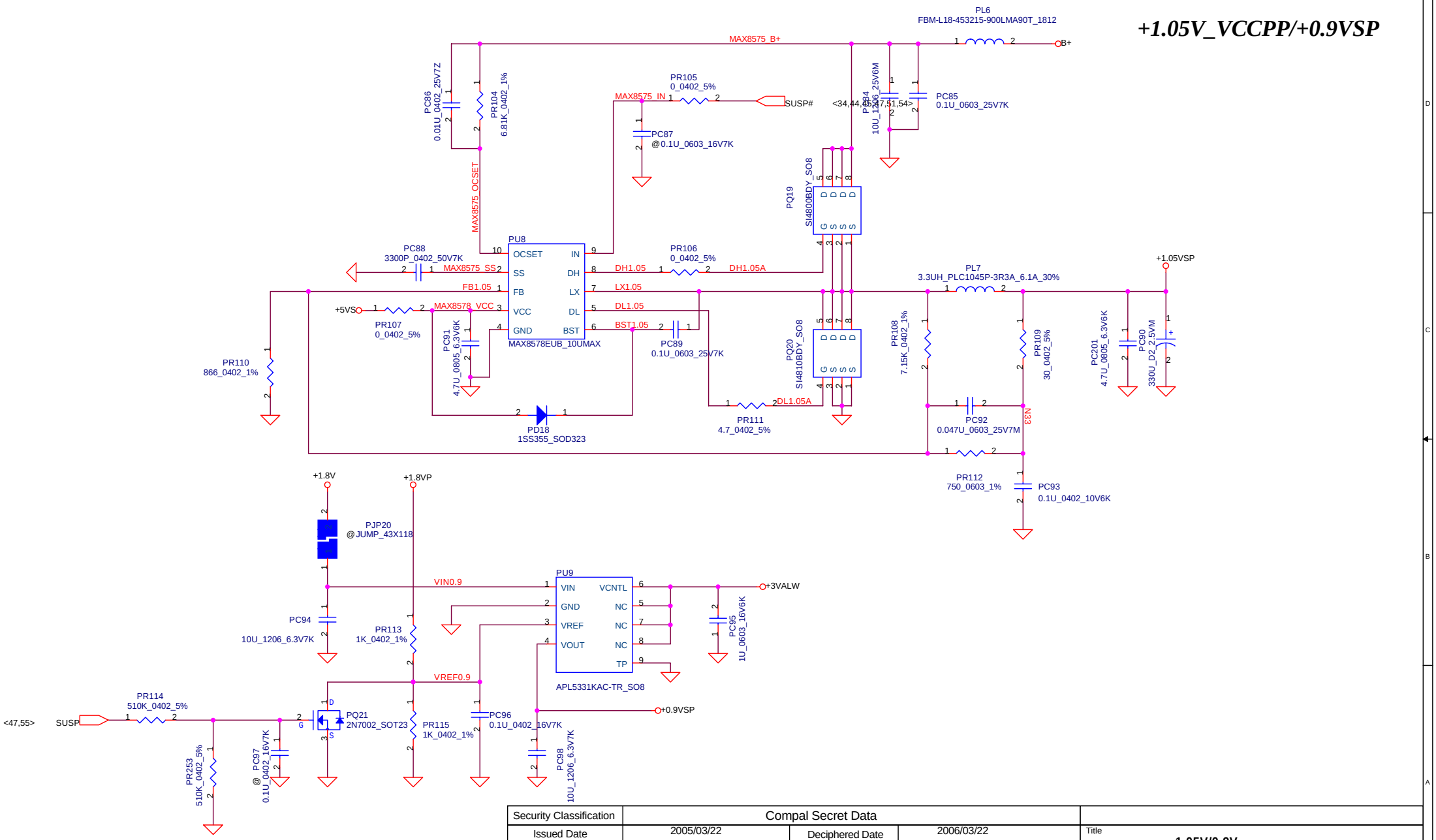

Security Classification	Compal Secret Data		
Issued Date	2005/03/22	Deciphered Date	2006/03/22

THIS SHEET OF ENGINEERING DRAWING IS THE PROPRIETARY PROPERTY OF COMPAL ELECTRONICS, INC. AND CONTAINS CONFIDENTIAL AND TRADE SECRET INFORMATION. THIS SHEET MAY NOT BE TRANSFERED FROM THE CUSTODY OF THE COMPETENT DIVISION OF R&D DEPARTMENT EXCEPT AS AUTHORIZED BY COMPAL ELECTRONICS, INC. NEITHER THIS SHEET NOR THE INFORMATION IT CONTAINS MAY BE USED BY OR DISCLOSED TO ANY THIRD PARTY WITHOUT PRIOR WRITTEN CONSENT OF COMPAL ELECTRONICS, INC.

Title: **1.05V/0.9V**

Size | Document Number | Rev 1.0

Date: Thursday, December 15, 2005 | Sheet 52 of 60

CPU CORE

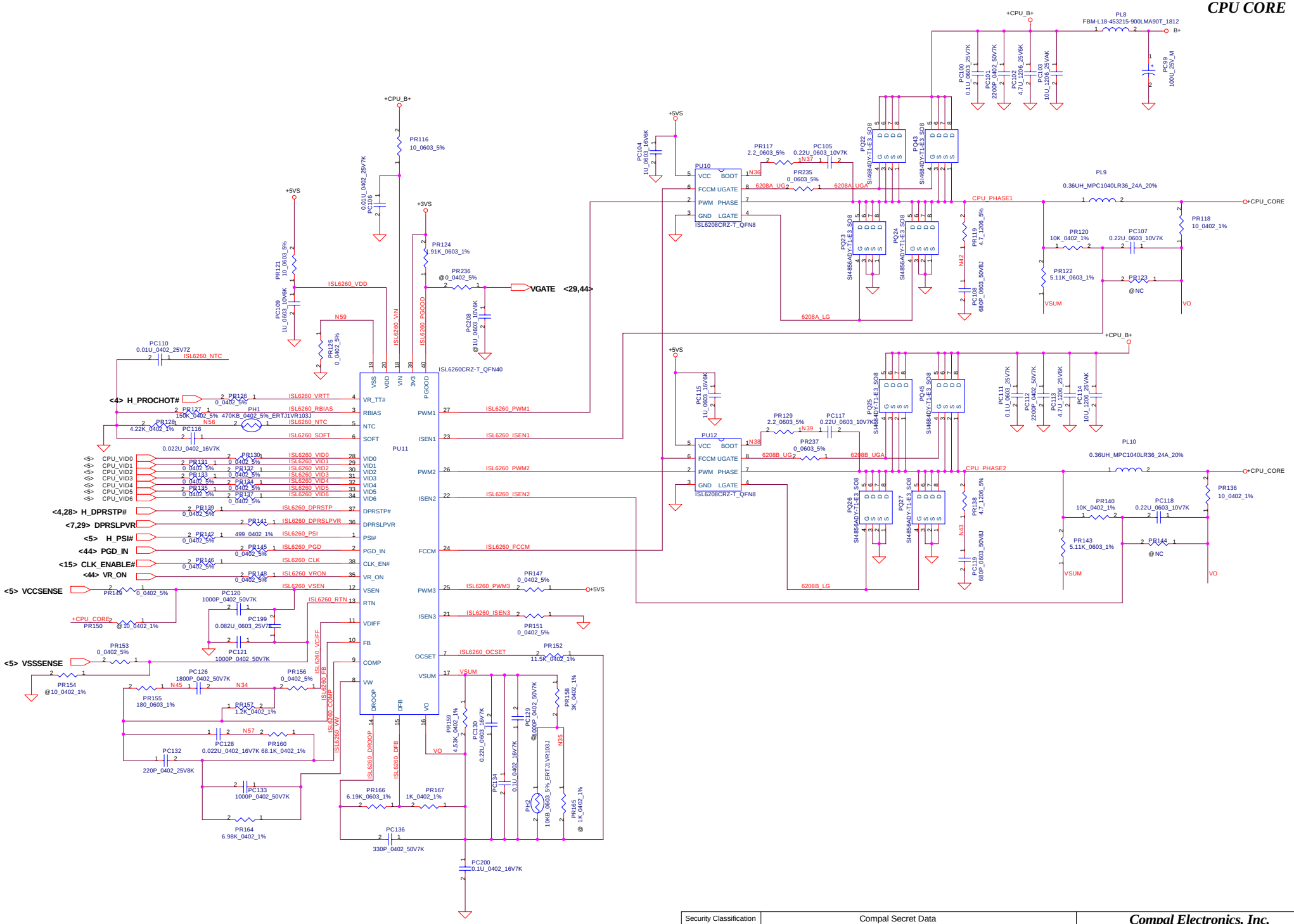

Security Classification	Compal Secret Data		
Issued Date	2005/03/22	Deciphered Date	2006/03/22

THIS SHEET OF ENGINEERING DRAWING IS THE PROPRIETARY PROPERTY OF COMPAL ELECTRONICS, INC. AND CONTAINS CONFIDENTIAL AND TRADE SECRET INFORMATION. THIS SHEET MAY NOT BE TRANSFERED FROM THE CUSTODY OF THE COMPETENT DIVISION OF R&D DEPARTMENT EXCEPT AS AUTHORIZED BY COMPAL ELECTRONICS, INC. NEITHER THIS SHEET NOR THE INFORMATION IT CONTAINS MAY BE USED BY OR DISCLOSED TO ANY THIRD PARTY WITHOUT PRIOR WRITTEN CONSENT OF COMPAL ELECTRONICS, INC.

Compal Electronics, Inc.

Title: CPU_CORE

Size: C | Document Number | Rev: 1.0

Date: Thursday, December 15, 2005 | Sheet 53 of 60

+VGA_COREP/+1.8VSP

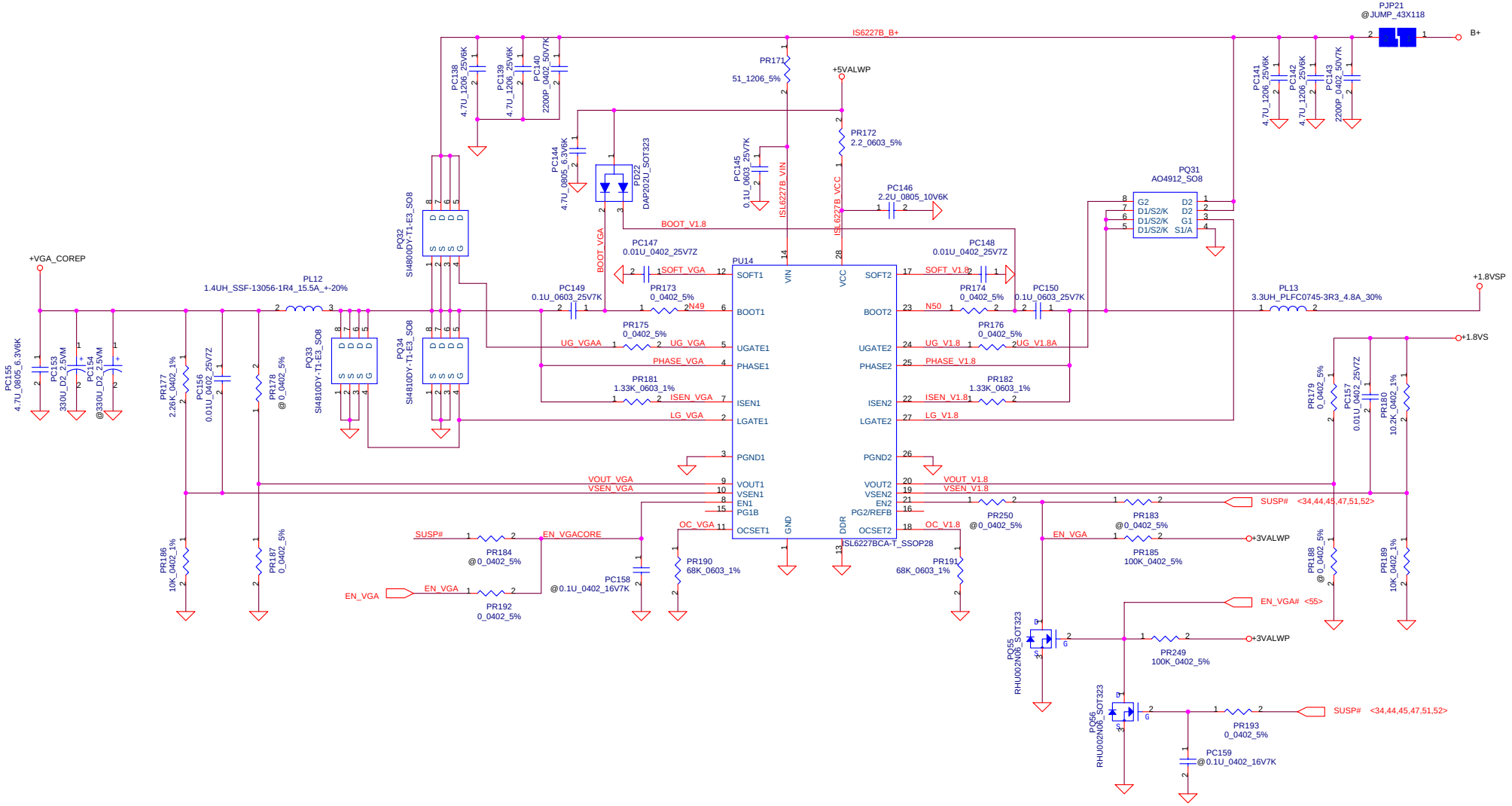

Security Classification	Compal Secret Data			Title
Issued Date	2005/03/22	Deciphered Date	2006/03/22	

THIS SHEET OF ENGINEERING DRAWING IS THE PROPRIETARY PROPERTY OF COMPAL ELECTRONICS, INC. AND CONTAINS CONFIDENTIAL AND TRADE SECRET INFORMATION. THIS SHEET MAY NOT BE TRANSFERED FROM THE CUSTODY OF THE COMPETENT DIVISION OF R&D DEPARTMENT EXCEPT AS AUTHORIZED BY COMPAL ELECTRONICS, INC. NEITHER THIS SHEET NOR THE INFORMATION IT CONTAINS MAY BE USED BY OR DISCLOSED TO ANY THIRD PARTY WITHOUT PRIOR WRITTEN CONSENT OF COMPAL ELECTRONICS, INC.

Size	Document Number	Rev
Custom	LA-2841	1.0

Date: Thursday, December 15, 2005 Sheet 54 of 60

+1.2VSP/+0.9VSP

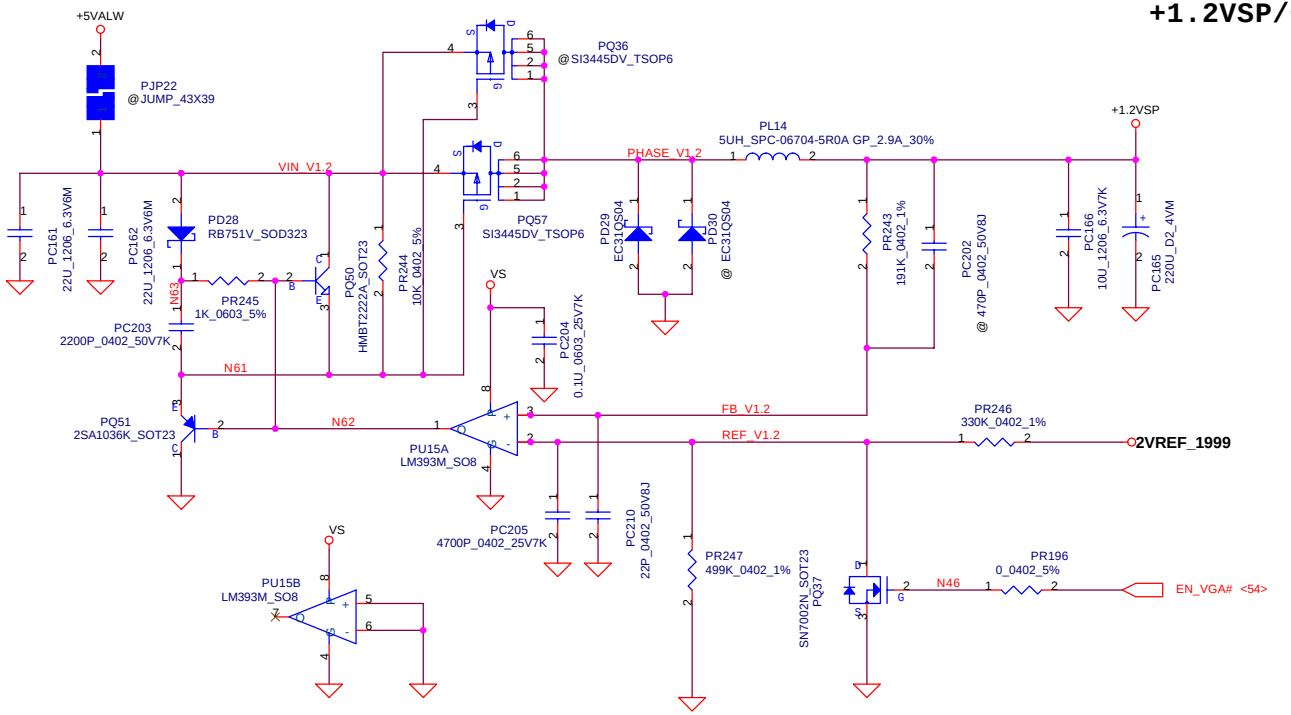

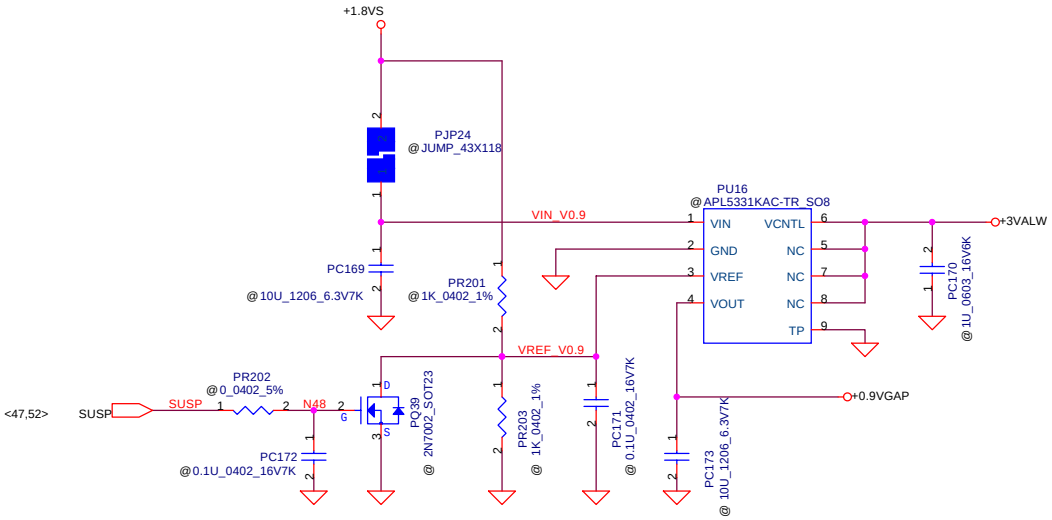

Security Classification	Compal Secret Data		
Issued Date	2005/03/2	Deciphered Date	2006/03/22

THIS SHEET OF ENGINEERING DRAWING IS THE PROPRIETARY PROPERTY OF COMPAL ELECTRONICS, INC. AND CONTAINS CONFIDENTIAL AND TRADE SECRET INFORMATION. THIS SHEET MAY NOT BE TRANSFERED FROM THE CUSTODY OF THE COMPETENT DIVISION OF R&D DEPARTMENT EXCEPT AS AUTHORIZED BY COMPAL ELECTRONICS, INC. NEITHER THIS SHEET NOR THE INFORMATION IT CONTAINS MAY BE USED BY OR DISCLOSED TO ANY THIRD PARTY WITHOUT PRIOR WRITTEN CONSENT OF COMPAL ELECTRONICS, INC.

Compal Electronics, Inc.

Title: **VGA1.2V/VGA0.9V**

Size: Custom | Document Number | Rev 1.0

Date: Thursday, December 15, 2005 | Sheet 55 of 60

Battery Connect/OTP

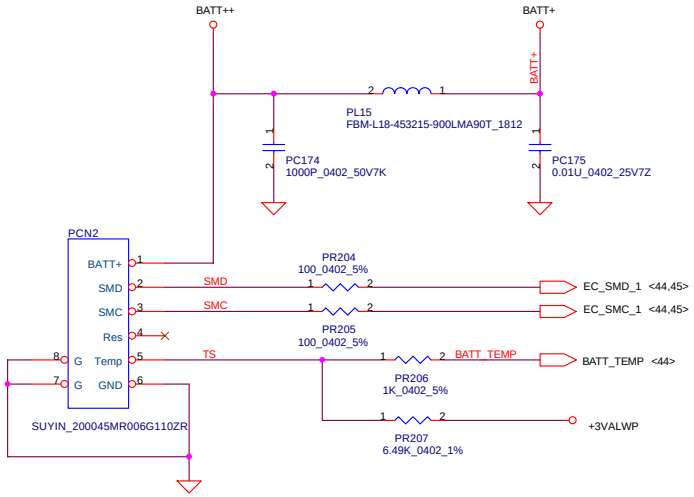

PJPB1 battery connector

SMART Battery:
1.BATT+
2.SMBD
3.SMBC
4.Res
5.Temp
6.GND

PH1 under CPU botten side :
CPU thermal protection at 90 +-3 degree C
Recovery at 50 +-3 degree C

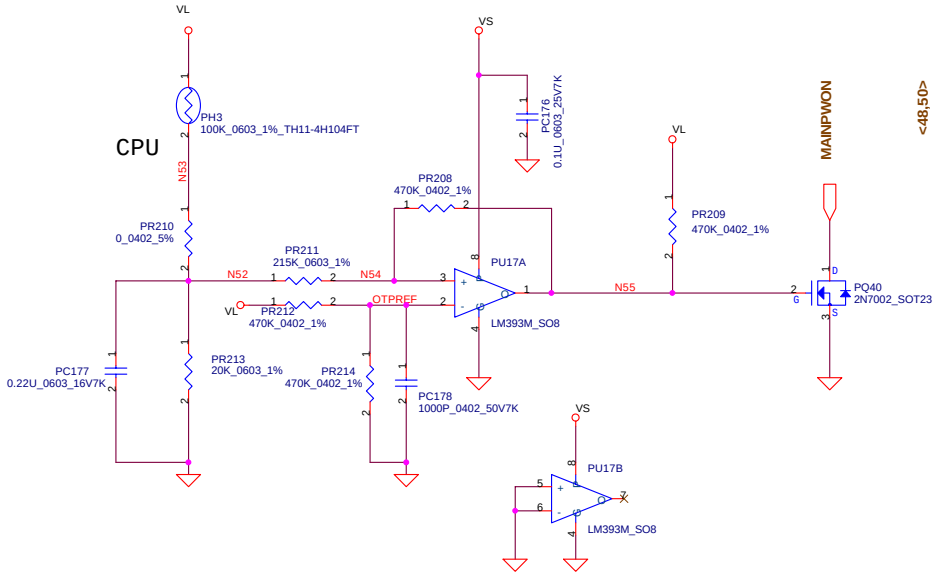

Security Classification	Compal Secret Data		
Issued Date	2005/03/01	Deciphered Date	2006/03/01

THIS SHEET OF ENGINEERING DRAWING IS THE PROPRIETARY PROPERTY OF COMPAL ELECTRONICS, INC. AND CONTAINS CONFIDENTIAL AND TRADE SECRET INFORMATION. THIS SHEET MAY NOT BE TRANSFERED FROM THE CUSTODY OF THE COMPETENT DIVISION OF R&D DEPARTMENT EXCEPT AS AUTHORIZED BY COMPAL ELECTRONICS, INC. NEITHER THIS SHEET NOR THE INFORMATION IT CONTAINS MAY BE USED BY OR DISCLOSED TO ANY THIRD PARTY WITHOUT PRIOR WRITTEN CONSENT OF COMPAL ELECTRONICS, INC.

Title: **BATTERY CONN**

Size	Document Number	Rev
Custom	LA-2841	1.0

Date: Thursday, December 15, 2005 Sheet 56 of 60

Version change list (P.I.R. List)

Item	Modify list	Reason for change	Rev.	PG#	Modify by
1	Add R579 and R580 for EC PA/PR detec	EC team request	Rev0.2	P44	6/6 '05
2	BOM del C591 220U_D2 for +VCCP bypass capacitance	Cost down	Rev0.2	P6	6/6 '05
3	U44 pin5 change from +5VAMP to +5V	Design modify	Rev0.2	P40	6/6 '05
4	U44 pin3 change from GNDA to GND	Design modify	Rev0.2	P40	6/6 '05
5	JP21 50pin contact to U31 F25pin	support system memory throttling	Rev0.2	P13	6/6 '05
6	JP24 50pin contact to U31 H26pin	support system memory throttling	Rev0.2	P14	6/6 '05
7	Add D26	Add RTC Battery life	Rev0.2	P28	6/6 '05
8	BOM del R51	Change NB strap pin CFG9 to Normal Operation	Rev0.2	P11	6/6 '05
9	Change R562 from 649K_0402 to 649_0402_1%	BOM error fix LAN can't link	Rev0.2	P35	6/6 '05
10	Change R558 from3.3K_0402 to 200_0402_5%	BOM error fix LAN can't link	Rev0.2	P35	6/6 '05
11	U24 contact to CPUSB#	Reserve new card detect input	Rev0.2	P44	6/6 '05
12	BOM del R307	no need EC control new card reset	Rev0.2	P44	6/6 '05
13	Add R582 @0_0402	Reserve	Rev0.2	P35	6/6 '05
14	Cancel U12 pin3 contact to +3VLAN	Design modify for LAN function fix LAN can't link	Rev0.2	P35	6/6 '05
15	IFPAB_PLLVDD、PLLVDD、VID_PLLVDD change from 3.3V to 2.5V	G72、G73 power modify	Rev0.2	P20	6/6 '05
16	PEX_CFG 0~2 change from 100 to 001	Overridden CFG modify	Rev0.2	P26	6/6 '05
17	Add JP34 for mini-PCIE card	ME update	Rev0.2	P37	6/6 '05
18	Del BOM R359,R349,R361,D9,D10,Q23	For TI 7412 modify request	Rev0.2	P32	6/7 '05
19	Change MSBS_SDCMD_SMWE_FIXED# to MSBS_SDCMD_SMWE#	For TI 7412 modify request	Rev0.2	P32	6/7 '05
20	Change SDCLK_SMRE_FIXED# to SDCLK_SMRE#	For TI 7412 modify request	Rev0.2	P32	6/7 '05
21	Change SDWP#_SMCE_FIXED# to SDWP#_SMCE#	For TI 7412 modify request	Rev0.2	P32	6/7 '05
22	Change SM_RB_FIXED# to SM_RB#	For TI 7412 modify request	Rev0.2	P32	6/7 '05
23	Change R554,R556,R557,R559 from 10K to 2.2K	For TI 7412 modify request	Rev0.2	P32	6/7 '05
24	Del R369,Q20,Q9,C446,JP29,JOPEN1,JOPEN2	Cancel TV tuner function	Rev0.2	P41	6/7 '05
25	Change LINK_LED100# contact to U41 pin27	Customer request for LAN link LED state	Rev0.2	P35	6/8 '05
26	Add R583,R584 75 ohm contact to JP19 and RJ45_GND	LAN modify	Rev0.2	P35	6/8 '05
27	Swap DQSA0~7/DQSA#0~7 and DQSC0~7/DQSC#0~7	Schematic error modify	Rev0.2	P19	6/8 '05
28	Add R585 LID_SW# 10K pull-high reserve	LID_SW# floating	Rev0.2	P44	6/13 '05
29	U6 pin D23 SLP_S4# contact to U24 pin35	EC need detect SLP_S4# for S4 state	Rev0.2	P44	6/13 '05
30	BOM update add R388	DOCK_MICR need pull-high to +CODEC_REFC	Rev0.2	P38	6/13 '05
31	Change WL_PRIORITY contact to JP18 pin3 and BT_PRIORITY contact to JP18 pin5.	pin define swap	Rev0.2	P37	6/14 '05
32	BOM add R587,R588,R589,R590 0 ohm	for NV72 CLK swap pin rework	Rev0.2	P19	6/14 '05
33	JP17 footprint update	DB1 footprint error, fix can't TV-out	Rev0.2	P17	6/14 '05
34	Del R587,R588,R589,R590 0 ohm	for NV72 chipset modify	Rev0.3	P19	6/17 '05
35	Add R586,R587	UMA or Discrrte PCBA detect	Rev0.3	P44	6/27 '05
36	Change R145,R146 from 88.7K to 88.7 ohm	BOM error	Rev0.3	P18	6/28 '05
37	Change C419,C421 form 33P to 22P_0402	improve TV out quility.	Rev0.3	P15	6/28 '05
38	Add R588	TI recommend(It can avoid the small noise form this SPKROUT pin)	Rev0.3	P32	6/30 '05
39	JP26 footprint update	ME change new USB connector	Rev0.3	P41	6/30 '05
40	JP3 footprint update	ME change new CRT connector	Rev0.3	P17	
41	Add R589	Dual layout for 9LP306 and SLG8LP462.	Rev0.3	P15	7/05 '05
42	BOM add C591 220U_D2 for +VCCP bypass capacitance	change 220U location with C595	Rev0.3	P06	7/06 '05
43	BOM del C595 220U_D2 for +VCCP bypass capacitance	For cost down	Rev0.3	P11	7/06 '05
44	U24(EC) pin91 add ACZ_RST# input	fix into xp codec out popo noise	Rev0.3	P44	7/06 '05
45	Add C790,C791,C792,C793,C794,C795,C796 100P_0402	For EMI	Rev0.3	P42	7/06 '05
46	Add R590,Q46	Switch PCBEEP path	Rev0.3	P29,40	7/07 '05
47	Add C797 reserve	For EMI	Rev0.3	P37	7/07 '05
48	Change R94,R141 to @ and change R96,R142 form @ to 128@	For NVDIA change request	Rev0.3	P19	7/08 '05
49	Change R139,Q6 to @ and change R145 form 87_0402 to 124_0402, R84 from 130_0402 change to 124_0402	For NVDIA change request	Rev0.3	P18	7/08 '05
50	Add screw hold H23, H24	ME drawing modify	Rev0.3	P47	7/08 '05
51	R36 pin1 change contact to ACTLED#,R43 pin1 change contact to LINK_LED100#	Change LAN LED state, Amber LED indicates activity, Green LED indicates the link is present	Rev0.3	P35	7/09 '05
52	Add R591 10K_0402 and Q47	fix mute LED power on turn on	Rev0.3	P38	7/11 '05
53	BOM del R383 4.7K pull-high	EC program this pin as push-pull output	Rev0.3	P42	7/13 '05

Security Classification	Compal Secret Data		
Issued Date	2005/03/10	Deciphered Date	2006/03/10

THIS SHEET OF ENGINEERING DRAWING IS THE PROPRIETARY PROPERTY OF COMPAL ELECTRONICS, INC. AND CONTAINS CONFIDENTIAL AND TRADE SECRET INFORMATION. THIS SHEET MAY NOT BE TRANSFERED FROM THE CUSTODY OF THE COMPETENT DIVISION OF R&D DEPARTMENT EXCEPT AS AUTHORIZED BY COMPAL ELECTRONICS, INC. NEITHER THIS SHEET NOR THE INFORMATION IT CONTAINS MAY BE USED BY OR DISCLOSED TO ANY THIRD PARTY WITHOUT PRIOR WRITTEN CONSENT OF COMPAL ELECTRONICS, INC.

Compal Electronics, Inc.

Title: H/W2 EE Dept. PIR SHEET

Size: | Document Number: LA-2841 | Rev: 1.0

Date: Thursday, December 15, 2005 | Sheet 57 of 60

Version change list (P.I.R. List)

Item	Modify list	Reason for change	Rev.	PG#	Modify by
54	BOM del R101,C161,R467,R88	nvdia recommend	Rev0.3	P18	7/13 '05
55	BOM del R78,R468,R111,R117,R63,R475,R477	nvdia recommend	Rev0.3	P26	7/13 '05
56	BOM del R108,add R112	nvdia recommend(change to PEX_CFG[2..0]=0x010b)	Rev0.3	P26	7/18 '05
57	BOM add C599	add 220U cap for 1.8V power decoupling	Rev0.4	P11	8/18 '05
58	BOM add R455	add 51_0402 resister for intel Yonah B0 sightings update	Rev0.4	P04	8/18 '05
59	Add Q48,Q49,Q50,R593,R594	modify WLED control circuit for OTS:0164892 issue	Rev0.4	P37	8/22 '05
60	Del D3	modify WLED control circuit for OTS:0164892 issue	Rev0.4	P41	8/22 '05
61	Del R440,R432,Q30	modify WLED control circuit for OTS:0164892 issue	Rev0.4	P16	8/22 '05
62	Add R592	add R592 150 ohm for WLED# current limit	Rev0.4	P37	8/22 '05
63	JP9 Pin 14 contact to +5VS	change SPDIF LED power from +5V to +5VS	Rev0.4	P42	8/22 '05
64	Add Q51	Prevent TPS2231 pin2 +3VALW leakage to +3VS	Rev0.4	P34	8/29 '05
65	JP5 Pin 25 contact to +3VALW	switch board need +3VALW provide lie switch power	Rev0.4	P42	8/23 '05
66	BOM change R554/R557/R556 to 100K, change R559 to 22K	TI 7412 pull-high recommend	Rev0.4	P32	8/23 '05
67	JP3 change new part	change CRT conn from top side to bottom side for DFX request	Rev0.4	P17	8/24 '05
68	Del C764,R552,R553, Add D28,change U40 to G993 fan control	Fan control circuit change to G993	Rev0.4	P04	8/24 '05
69	BOM del R47	Intel WW31 document update	Rev0.4	P11	8/29 '05
70	Add R595/R596/R597/R598/R599	SD card signal add 33 ohm damping resister	Rev0.4	P32	8/30 '05
71	Add R817/R77 10K_0402	NV72 A1 chip recommend JTAG_TCK pull-high and JTAG_N pull-down	Rev0.4	P18	8/29 '05
72	Del clock generators difference clock 49.9ohm termination	ICS9LP306 clock generators update	Rev0.4	P15	8/29 '05
73	Change clock generators difference clock 33ohm damping to 10ohm	ICS9LP306 clock generators update	Rev0.4	P15	8/29 '05
74	Change R266 from 475 ohm to 2.4K ohm	ICS9LP306 clock generators update	Rev0.4	P15	8/29 '05
75	Add D29/D30/D31/D32/D33/D34/D35/D36	SD card signal add diode for Voltage clamp	Rev0.4	P32	8/30 '05
76	Move C87/C11/C10/C3/C4/C5/C2/C13/C14/C34/C35/C1 for layout	ME update limit area for CPU	Rev0.4	P06	8/30 '05
77	Change R591 from 10K ohm to 100 ohm	Fix OTS:163350 calgary's mute LED can't display	Rev0.4	P38	8/30 '05
78	JP34 pin50 change contact from PM_EXTTS#1 to PM_EXTTS#0	Intel WW31 document update	Rev0.4	P14	8/30 '05
79	U31 pinH6 change contact from PM_EXTTS#1 to DPRSLPVR	Intel WW31 document update	Rev0.4	P07	8/30 '05
80	D26 pin2 change contact from +3VALW to LDO3	Add RTC battery life	Rev0.4	P28	8/30 '05
81	BOM change R562 from 649 ohm to 619 ohm and change U12 to new part	LAN performance modify	Rev0.4	P35	8/30 '05
82	Add R600 100 ohm and DEL C608 @	HP recommend	Rev0.4	P37	8/30 '05
83	Add R601 100 ohm	HP recommend	Rev0.4	P41	8/30 '05
84	Reserve C810~C821 0.1u cap	For EMI	Rev0.4	P42	8/30 '05
85	Add L32 and C822 on SPDIF signal	For EMI	Rev0.4	P42	8/30 '05
86	Add C802 /C803 /C804 /C805 1000P for CLKREQA#/CLKREQB#/CLKREQC#/CLKREQD#	For EMI	Rev0.4	P15	8/30 '05
87	U40 pin5,6,7,8 contact to GND	schematic update for SI2 fan can't full trun on issue	Rev0.5	P04	10/26 '05
88	change C599 from 220U to 330U	Steady the 1.8V	Rev0.5	P11	10/26 '05
89	Add R103 40.2ohm	nvdia recommend	Rev0.5	P21	10/28 '05
90	change R510,R75,R533,R168 from 120ohm to 499ohm for NV73 only	nvdia recommend	Rev0.5	P22~25	10/26 '05
91	straps table PEX_CFG[2:0] from 010 to 001 and PCI_DEVID[3:0] NV73M from 1010 to 1011	nvdia recommend	Rev0.5	P26	10/26 '05
92	Add C825 15P_0402 for MSCLK_SDCLK_SMELWP# signal	For EMI	Rev0.5	P32	10/26 '05
93	Add C823 1000P_0402 for +VCC_SD	For EMI	Rev0.5	P32	10/26 '05
94	Add C824 1000P_0402 for +VCC_SM_XD	For EMI	Rev0.5	P32	10/26 '05
95	Add C826 1000P_0402 for JP32 pin4	For EMI	Rev0.5	P32	10/26 '05
96	change PCM_SPK pull down R588 from 43K to 10K	TI recommend	Rev0.5	P32	10/26 '05
97	D29,D30,D31,D32 pin1 contact to +VCC_MS	schematic update for SI2 MS card can't work issue	Rev0.5	P32	10/26 '05
98	Add R607 22ohm and @ C827 10P	Reserve	Rev0.5	P32	10/26 '05
99	U18 pin6 contact to +3VS	TI recommend	Rev0.5	P33	10/26 '05
100	Add @ R606 110ohm	Reserve	Rev0.5	P35	10/26 '05
101	Change Q46 to U45 analog switch	design change	Rev0.5	P40	10/26 '05
102	Change U38 pin3,4 form +5VALW to +5V	design change	Rev0.5	P41	10/26 '05
103	Change Q2 from AO3413 to AO3419		Rev0.5	P41	10/26 '05
104	Add D38~D45 for KB ESD solution	For ESD request	Rev0.5	P42	10/26 '05
105	AIR_ACIN change contact to U24 pin81 and add R605 for BID define, add D37.	design change	Rev0.5	P44	10/26 '05

Security Classification	Compal Secret Data		
Issued Date	2005/03/10	Deciphered Date	2006/03/10

THIS SHEET OF ENGINEERING DRAWING IS THE PROPRIETARY PROPERTY OF COMPAL ELECTRONICS, INC. AND CONTAINS CONFIDENTIAL AND TRADE SECRET INFORMATION. THIS SHEET MAY NOT BE TRANSFERED FROM THE CUSTODY OF THE COMPETENT DIVISION OF R&D DEPARTMENT EXCEPT AS AUTHORIZED BY COMPAL ELECTRONICS, INC. NEITHER THIS SHEET NOR THE INFORMATION IT CONTAINS MAY BE USED BY OR DISCLOSED TO ANY THIRD PARTY WITHOUT PRIOR WRITTEN CONSENT OF COMPAL ELECTRONICS, INC.

Compal Electronics, Inc.

Title: H/W2 EE Dept. PIR SHEET

Size: | Document Number: LA-2841 | Rev: 1.0

Date: Thursday, December 15, 2005 | Sheet 58 of 60

Version change list (P.I.R. List)

Item	Modify list	Reason for change	Rev.	PG#	Modify by
106	Add D46	ESD	Rev1.0	P17	12/08 '05
107	RESERVE Q52 / C828 / R608	CONTROL RTC RESET	Rev1.0	P28	12/08 '05
108	ADD R612	CIR OUTPUT IS OPEN-DRAIN	Rev1.0	P42	12/08 '05
109	CANCEL C811 / C812 AND ADD D47	ESD	Rev1.0	P42	12/08 '05
110	CANCEL Q45 AND ADD U48 / C830	FIX ODD CAUSE BOOT LATE ISSUE	Rev1.0	P43	12/08 '05
111	CANCEL D37 AND RESERVE U47 / C51 / R611	IMPROVE EC RESET SIGNAL	Rev1.0	P44	12/08 '05
112	RESERVE U46 / C829 / R609 / Q53 / R610	CONTROL WRITE SIGNAL OF FLASH ROM	Rev1.0	P45	12/08 '05

Security Classification	Compal Secret Data		
Issued Date	2005/03/10	Deciphered Date	2006/03/10

THIS SHEET OF ENGINEERING DRAWING IS THE PROPRIETARY PROPERTY OF COMPAL ELECTRONICS, INC. AND CONTAINS CONFIDENTIAL AND TRADE SECRET INFORMATION. THIS SHEET MAY NOT BE TRANSFERED FROM THE CUSTODY OF THE COMPETENT DIVISION OF R&D DEPARTMENT EXCEPT AS AUTHORIZED BY COMPAL ELECTRONICS, INC. NEITHER THIS SHEET NOR THE INFORMATION IT CONTAINS MAY BE USED BY OR DISCLOSED TO ANY THIRD PARTY WITHOUT PRIOR WRITTEN CONSENT OF COMPAL ELECTRONICS, INC.

Compal Electronics, Inc.

Title: H/W2 EE Dept. PIR SHEET

Size: | Document Number: LA-2841 | Rev: 1.0

Date: Thursday, December 15, 2005 | Sheet 59 of 60

Version change list (P.I.R. List)

Power section

Item	Reason for change	PG#	Modify List	Date	B.Ver#
1	Solve the oscillate of +3VALWP when plug adapter.	48	Change PC11 from 10U_0805_10V to 0.1U_0603_25V.	2005.06.01	
2	Adjust VGA power rail sequence.	54	Add PQ55, PQ56 and PR249	2005.06.21	
3	To protect PQ21, because SUSP change to 18.5V from 5V.	52	Add PR253 and change PR114 to 510K_0402_5%.	2005.08.10	
4	To save S5 power consumption.	50,48	Add PR254, PR13, PR14, PQ1 and PC8. Reserve PR255.	2005.08.15	
5	To solve EMI issue.	53,49	Add PR117,PR129,PR119,PR138,PC108 and PC119. Change PJP16 to PL18 and PR30 from 0_0402 to 2.2_0603.	2005.08.15	
6	To speed up CP mode response.	49	Change PR32 to 10K; PR35 to 6.8K and PC21 to 2200P.	2005.08.23	
7	Reserve capacitor to reduce noise.	49	Reserve PC209.	2005.08.27	
8	To speed up C4 return to C0. follow Intel recommend.	53	Change PR141 from 0_0402_5% to 499_0402_1%.	2005.08.29	
9	To pull up +1.8V power plan to 1.846V.	51	Change PR89 from 10.2K to 10.5K.	2005.10.01	
10	To filter high frequency from AirCard.	55	Add PC210 22P_0402_50V.	2005.11.25	

Security Classification: Compal Secret Data
Issued Date: 2005/03/22 Deciphered Date: 2006/03/22

THIS SHEET OF ENGINEERING DRAWING IS THE PROPRIETARY PROPERTY OF COMPAL ELECTRONICS, INC. AND CONTAINS CONFIDENTIAL AND TRADE SECRET INFORMATION. THIS SHEET MAY NOT BE TRANSFERED FROM THE CUSTODY OF THE COMPETENT DIVISION OF R&D DEPARTMENT EXCEPT AS AUTHORIZED BY COMPAL ELECTRONICS, INC. NEITHER THIS SHEET NOR THE INFORMATION IT CONTAINS MAY BE USED BY OR DISCLOSED TO ANY THIRD PARTY WITHOUT PRIOR WRITTEN CONSENT OF COMPAL ELECTRONICS, INC.

Title: Power PIR
Size: Custom | Document Number: LA-2841 | Rev: 1.0
Date: Thursday, December 15, 2005 | Sheet 60 of 60