VULCAIN
UMA
SI Build
FINAL

2008.12.26

DATE	CHANGE NO.	REV

	EE	DATE	POWER	DATE
DRAWER				
DESIGN				
CHECK				
RESPONSIBLE				

SIZE = 3 VER :

FILE NAME : XXXX-XXXXXX-XX

P/N XXXXXXXXXXXX

INVENTEC

TITLE VV UMA SATA

SIZE	CODE	DOC. NUMBER	REV
D	CS	1310A22163-0-MTR	A01

SHEET 1 OF 50

http://laptop-motherboard-schematic.blogspot.com/

TABLE OF CONTENTS

PAGE
5- DC& BATTERY CHARGER
6- SELECT & BATTERY CONN
7- SYSTEM POWER(3V/5V)
8- SYSTEM POWER(+V1.8/+V1.25S)
9- SYSTEM POWER(+VGFX/+VCCP)
10- SYSTEM POWER(+V1.5S)
11- CPU POWER(VCC_CORE)
12- DDR TERMINATION VOLTAGE
13- POWER(SLEEP)
14- POWER(SEQUENCE)

PAGE
15- CLOCK_GENERATOR
16- PENRYN-1
17- PENRYN-2
18- PENRYN-3
19- THERMAL&FAN CONTROLLER
20- Crestline-1
21- Crestline-2
22- Crestline-3
23- Crestline-4
24- Crestline-5
25- Crestline-6
26- DDR2-DIMM0
27- DDR2-DIMM1
28- DDR2-DAMPING
29- VGA CONN
30- LCM CONN
31- ICH8-1
32- ICH8-2
33- ICH8-3
34- ICH8-4
35- ICH8-5

PAGE
36- SYSTEM BIOS
37- HDD&ODD CONN
38- USB CONN
39- KBC
40- KB&TP CONN
41- AUDIO CODEC
42- MDC CONN & AUDIO JACK
43- NIC 10/100- CONTROLLER
44- NIC 10/100- RJ45 CONN
45- MINICARD & BT CONN
46- NEW CARD & SD/MMC
47- LED & BUTTON&LID SWITCH
48- SCREW HOLE
49- SWITCH Board
50- ODD Extend Board

INVENTEC					
TITLE Vulcain UMA					
SIZE D	CODE CS	DOC. NUMBER AX1			REV 000
CHANGE by Puma_Chen	26-Dec-2008	SHEET 2 OF 50			

http://laptop-motherboard-schematic.blogspot.com/

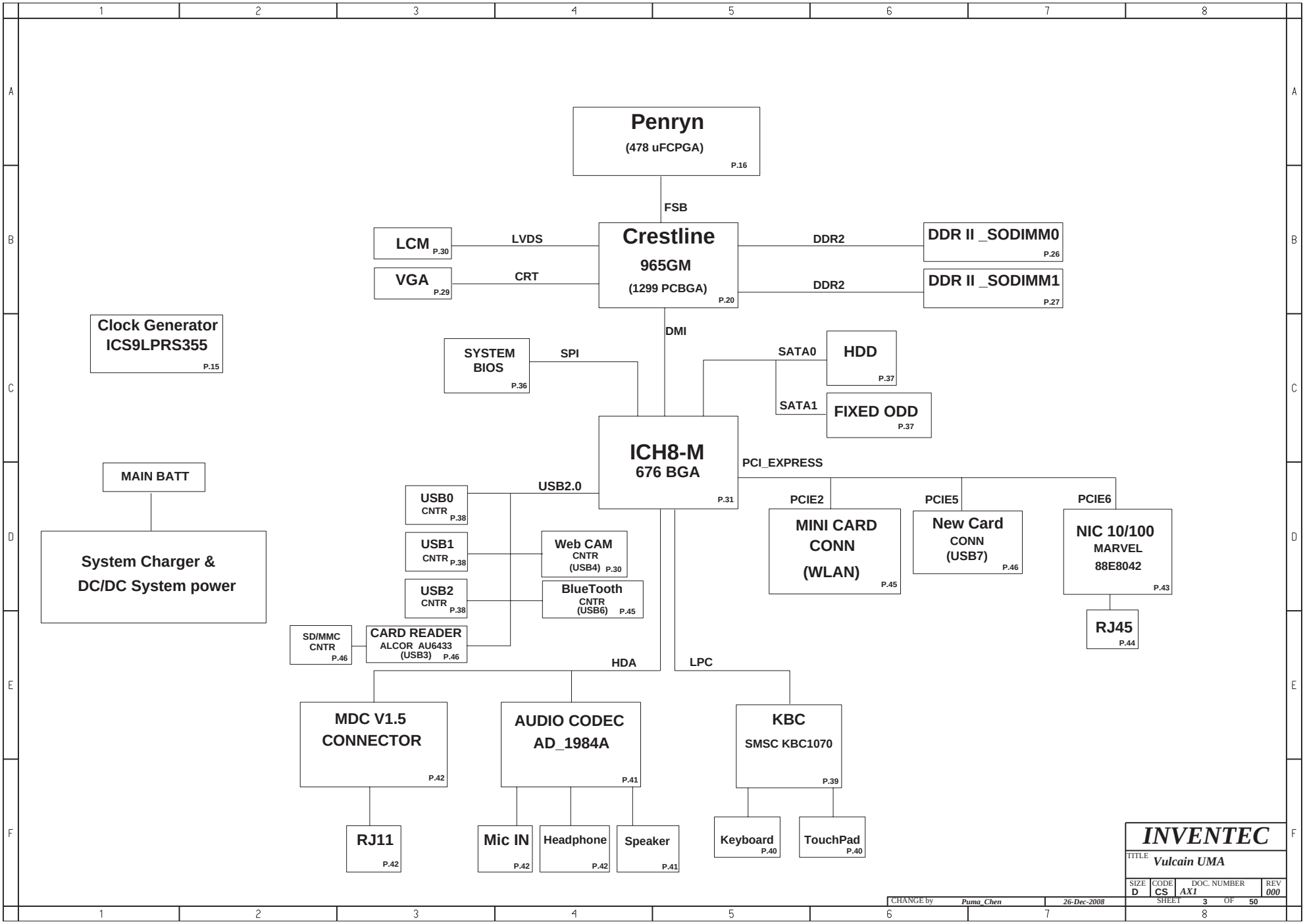

http://laptop-motherboard-schematic.blogspot.com/

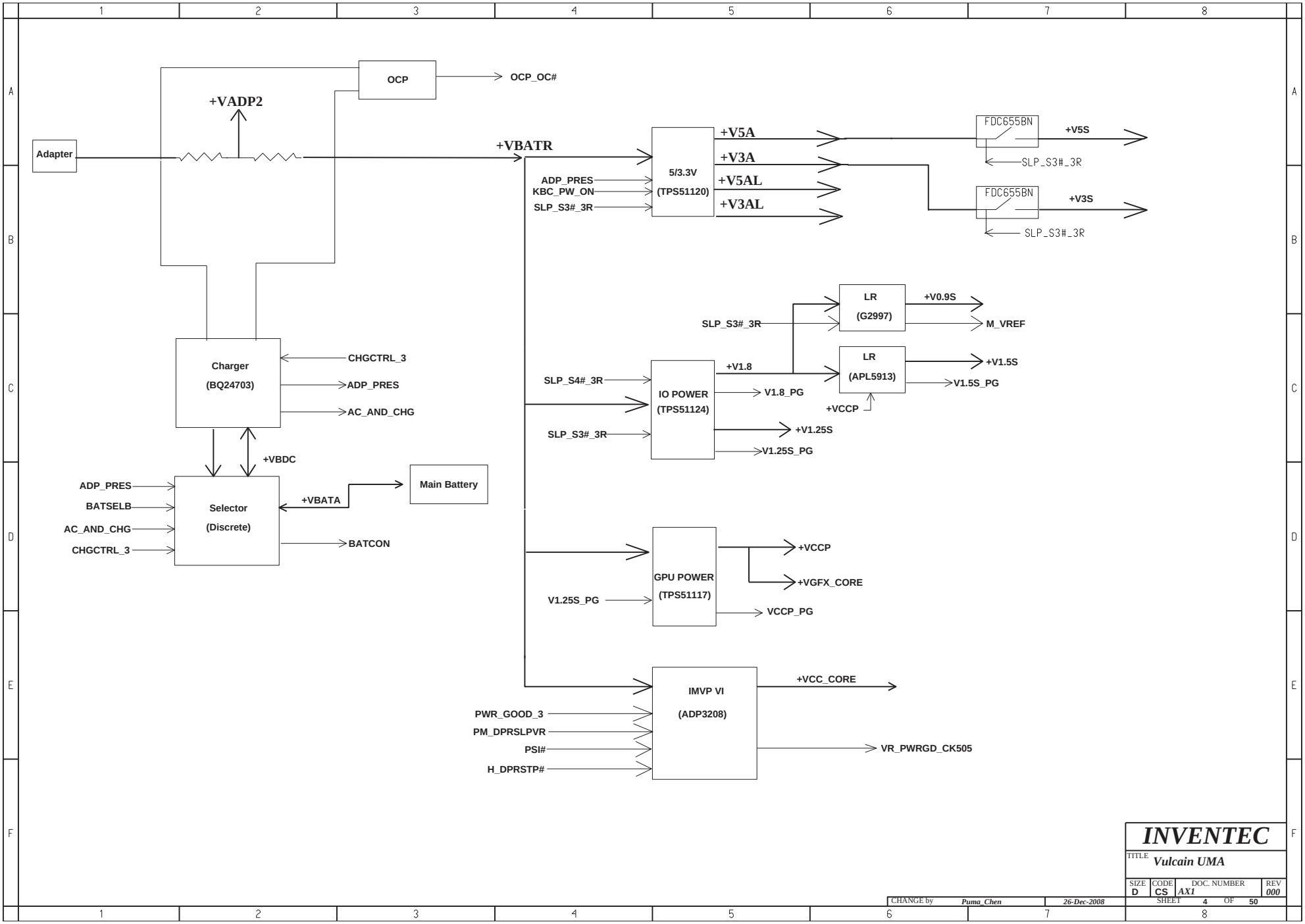

INVENTEC			
TITLE Vulcain UMA			
SIZE D	CODE CS	DOC. NUMBER AX1	REV 000
CHANGE by Puma_Chen	26-Dec-2008	SHEET 4 OF 50	

http://laptop-motherboard-schematic.blogspot.com/

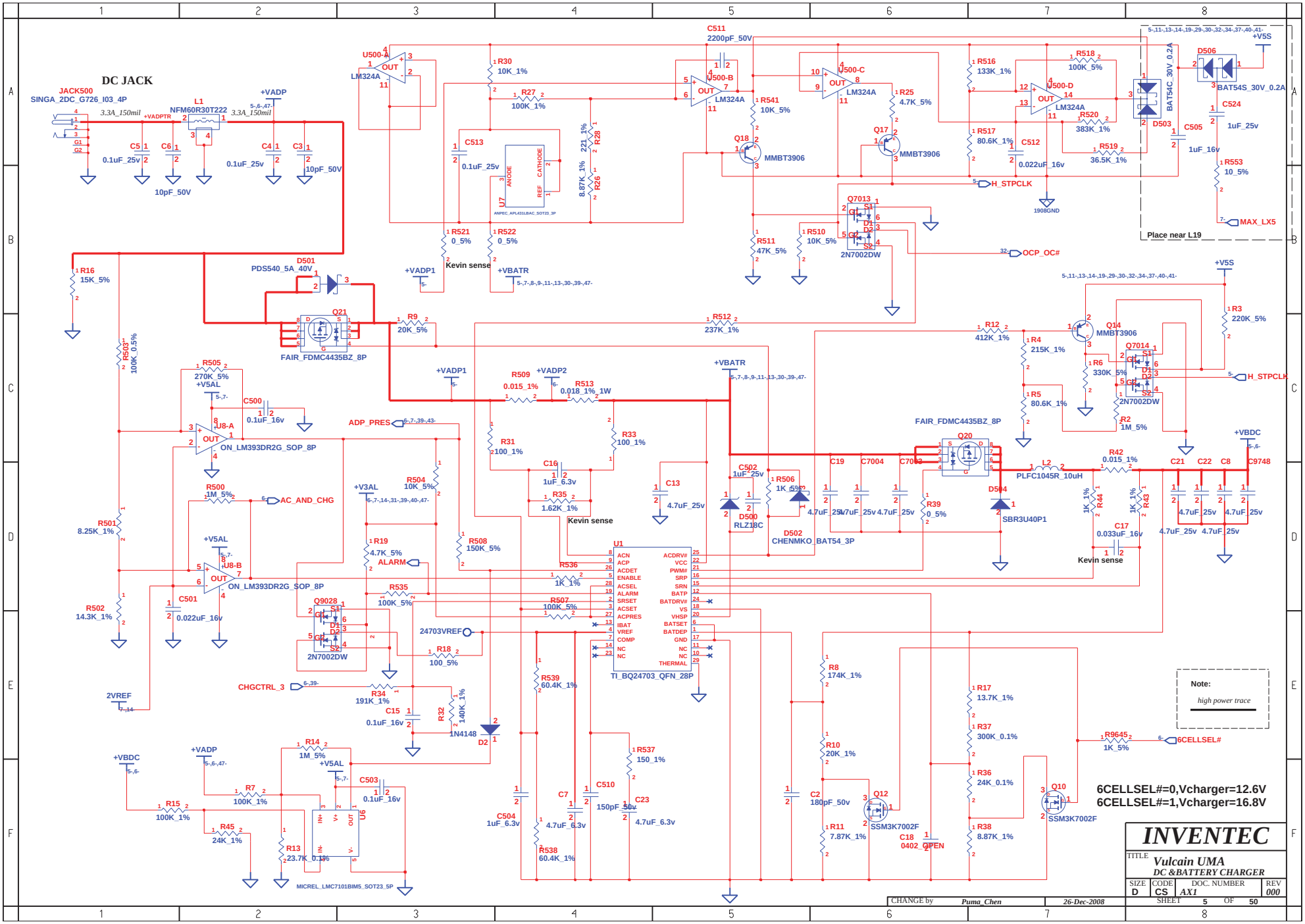

http://laptop-motherboard-schematic.blogspot.com/

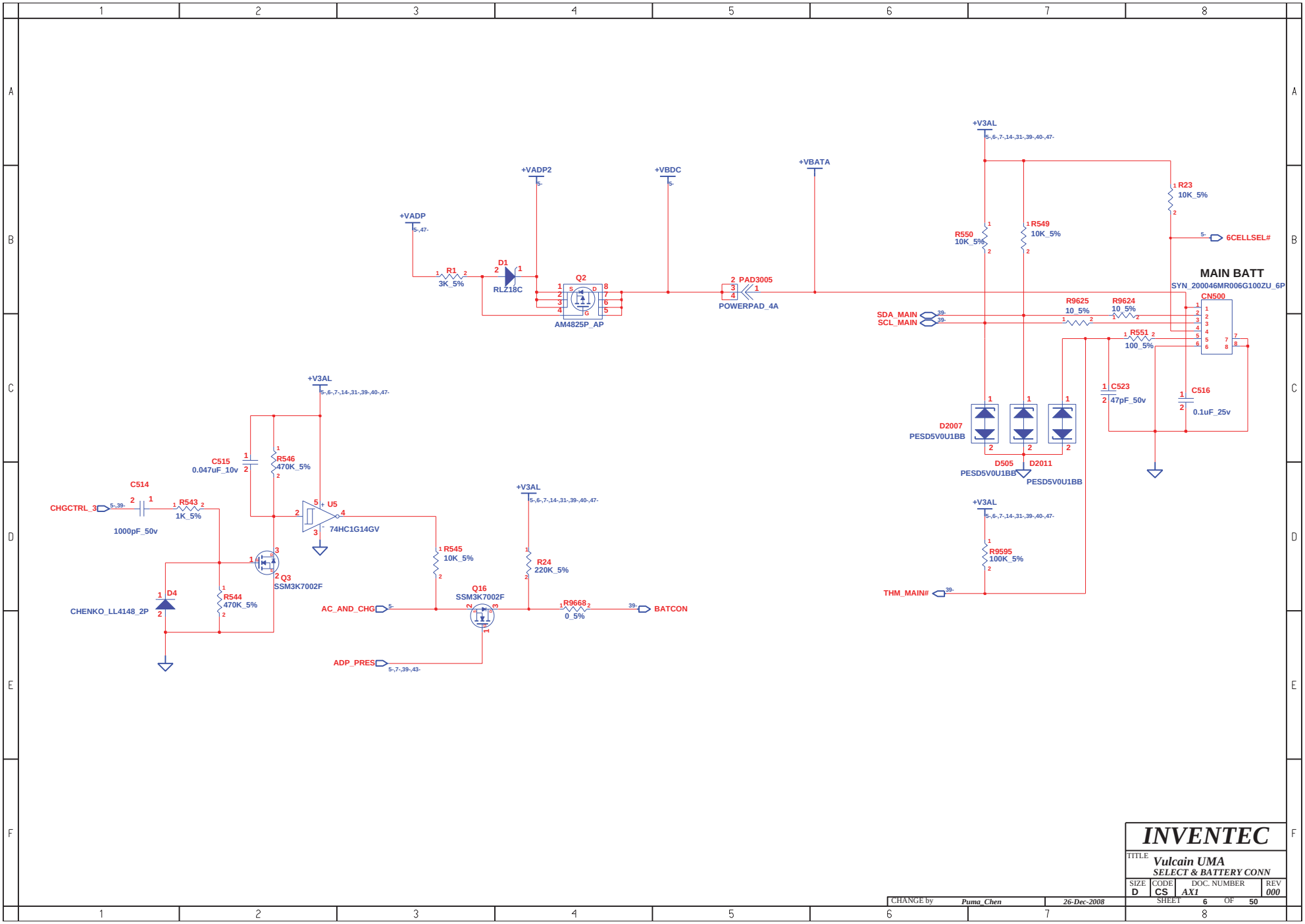

INVENTEC			
TITLE	Vulcain UMA SELECT & BATTERY CONN		
SIZE D	CODE CS	DOC. NUMBER AX1	REV 000
CHANGE by Puma_Chen	26-Dec-2008	SHEET 6 OF 50	

http://laptop-motherboard-schematic.blogspot.com/

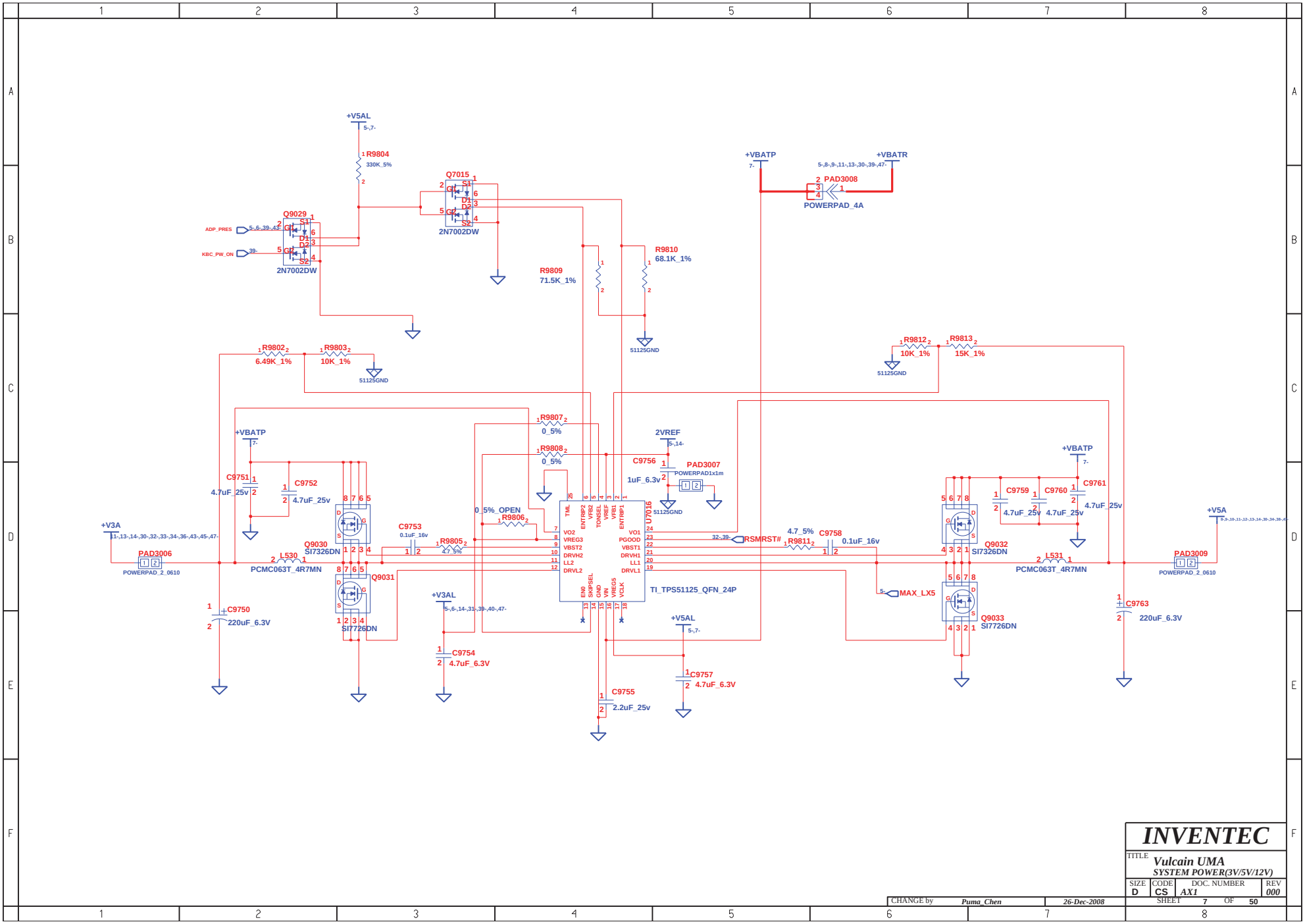

INVENTEC			
TITLE	Vulcain UMA SYSTEM POWER(3V/5V/12V)		
SIZE D	CODE CS	DOC. NUMBER AX1	REV 000
CHANGE by Puma_Chen	26-Dec-2008	SHEET 7 OF 50	

http://laptop-motherboard-schematic.blogspot.com/

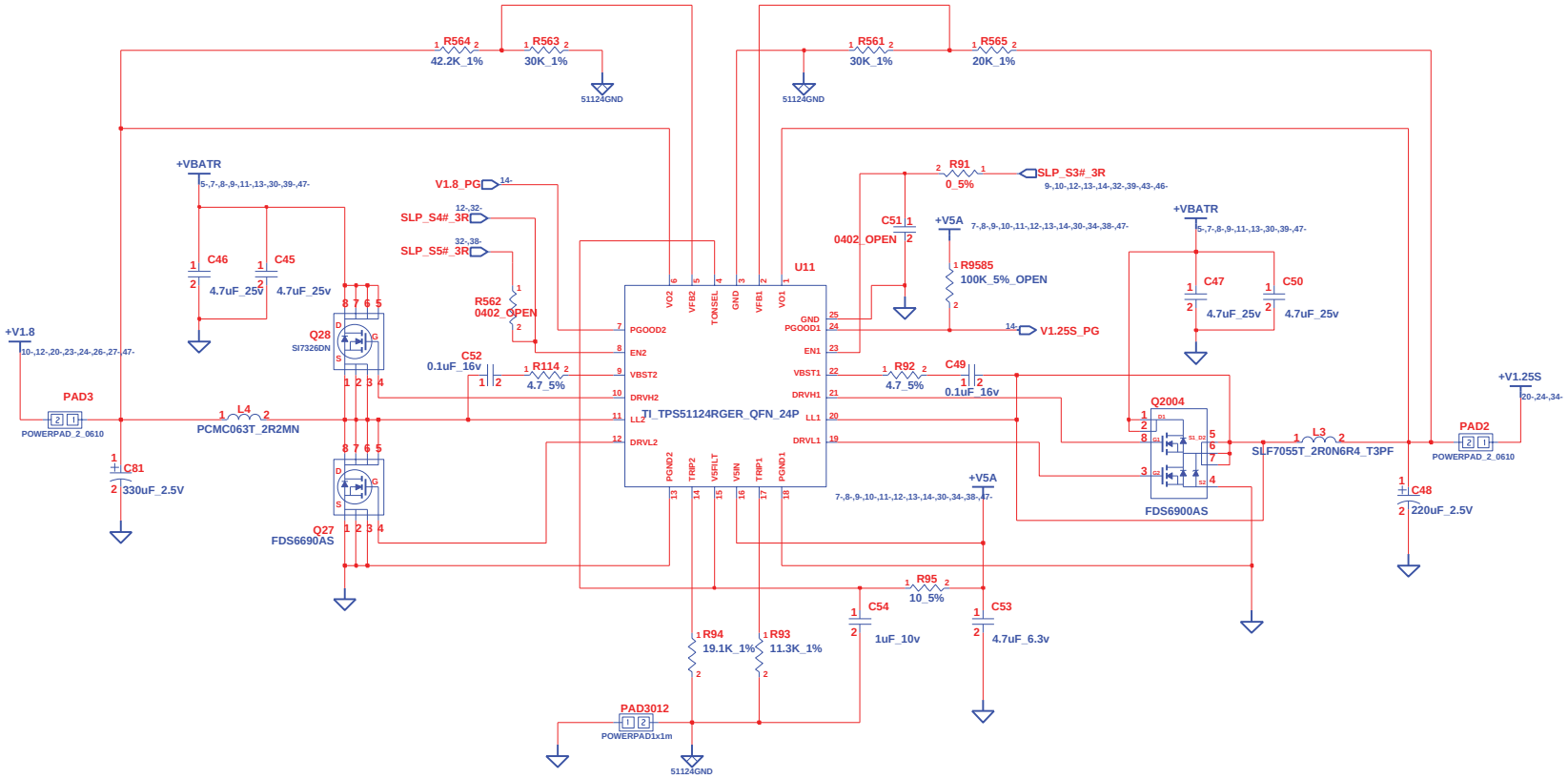

INVENTEC			
TITLE: Vulcain UMA SYSTEM POWER(+V1.8/+V1.25S)			
SIZE: D	CODE: CS	DOC. NUMBER: AX1	REV: 000
CHANGE by: Puma_Chen	26-Dec-2008	SHEET 8 OF 50	

http://laptop-motherboard-schematic.blogspot.com/

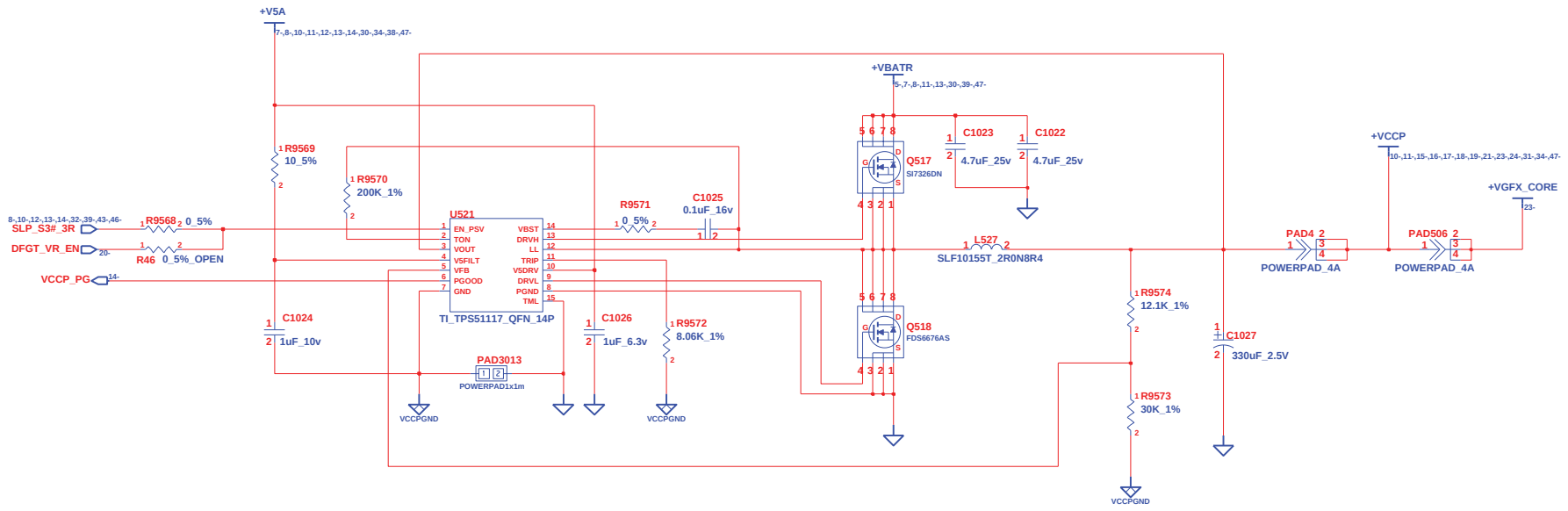

CHANGE by	Puma_Chen	26-Dec-2008	

INVENTEC

TITLE: *Vulcain UMA*
GRAPHIC POWER (+VGFX_CORE)

SIZE	CODE	DOC. NUMBER	REV
D	CS	AX1	000

SHEET 9 OF 50

http://laptop-motherboard-schematic.blogspot.com/

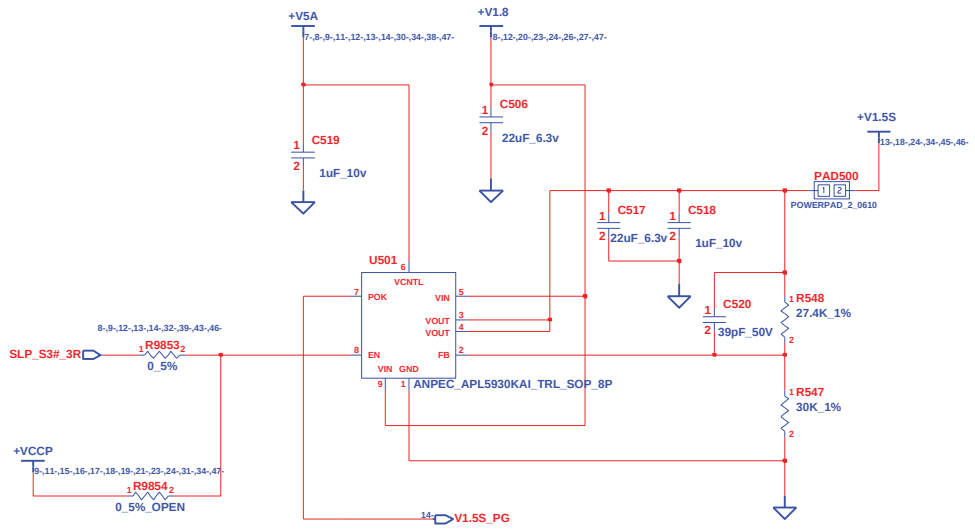

CHANGE by	Puma_Chen	26-Dec-2008	

INVENTEC

TITLE
Vulcain UMA
SYSTEM POWER(+VCCP/+V1.5S)

SIZE	CODE	DOC. NUMBER	REV
D	CS	AX1	000

SHEET 10 OF 50

http://laptop-motherboard-schematic.blogspot.com/

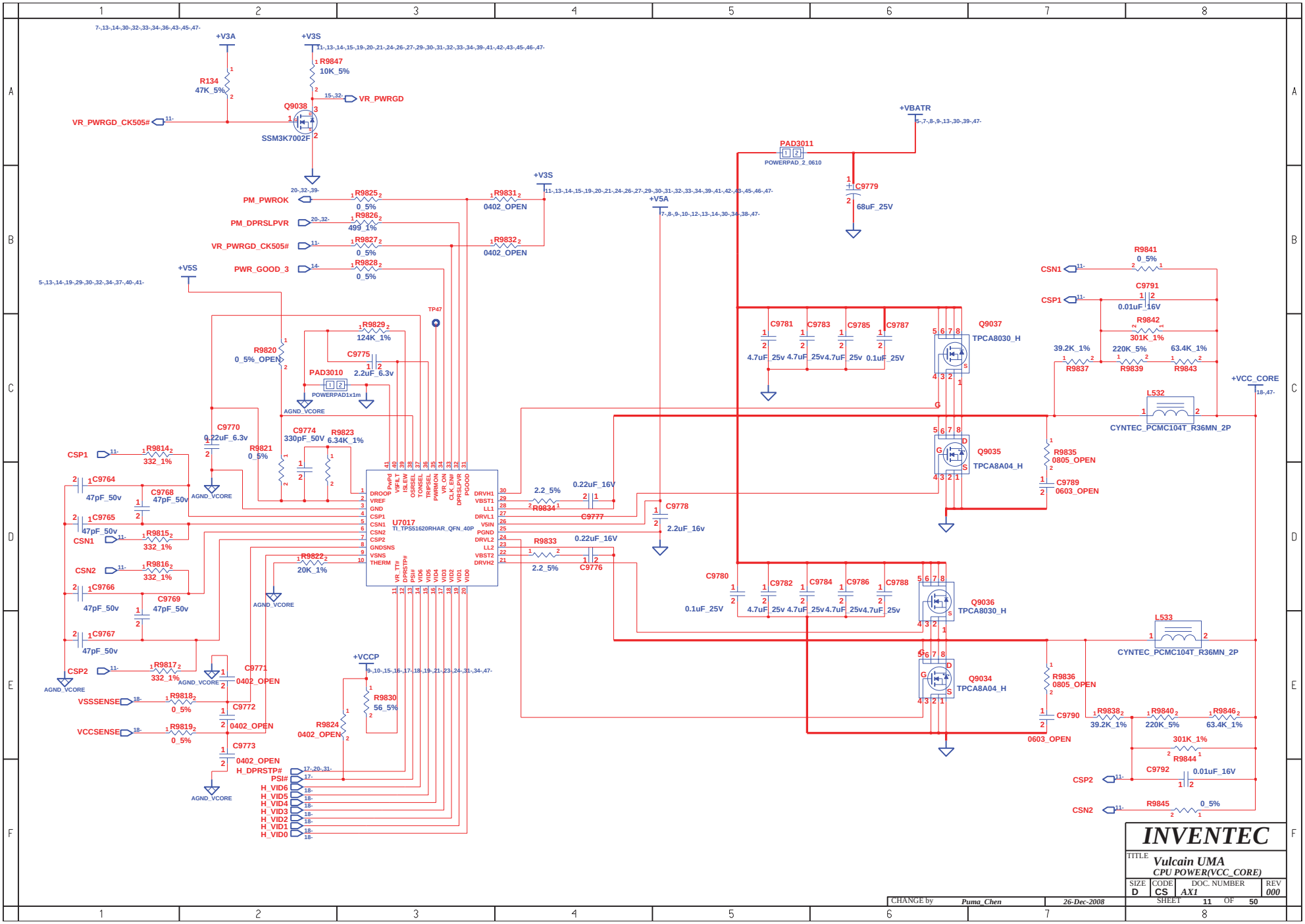

http://laptop-motherboard-schematic.blogspot.com/

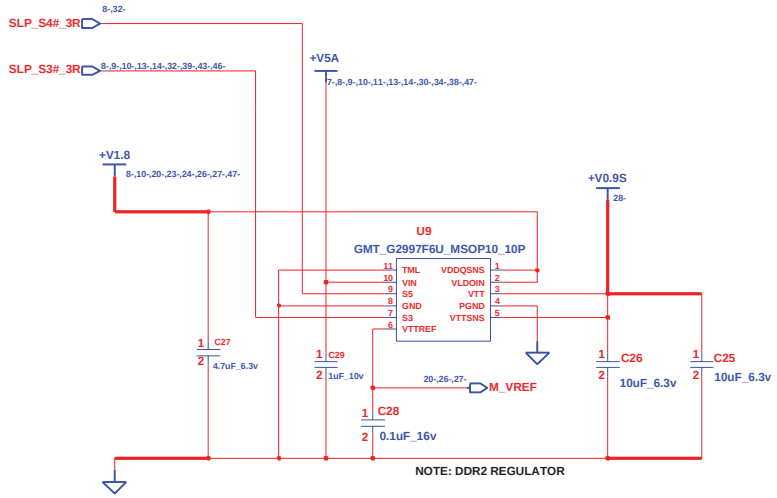

INVENTEC			
TITLE Vulcain UMA DDR TERMINATION VOLTAGE			
SIZE D	CODE CS	DOC. NUMBER AX1	REV 000
CHANGE by Puma_Chen	26-Dec-2008	SHEET 12 OF 50	

http://laptop-motherboard-schematic.blogspot.com/

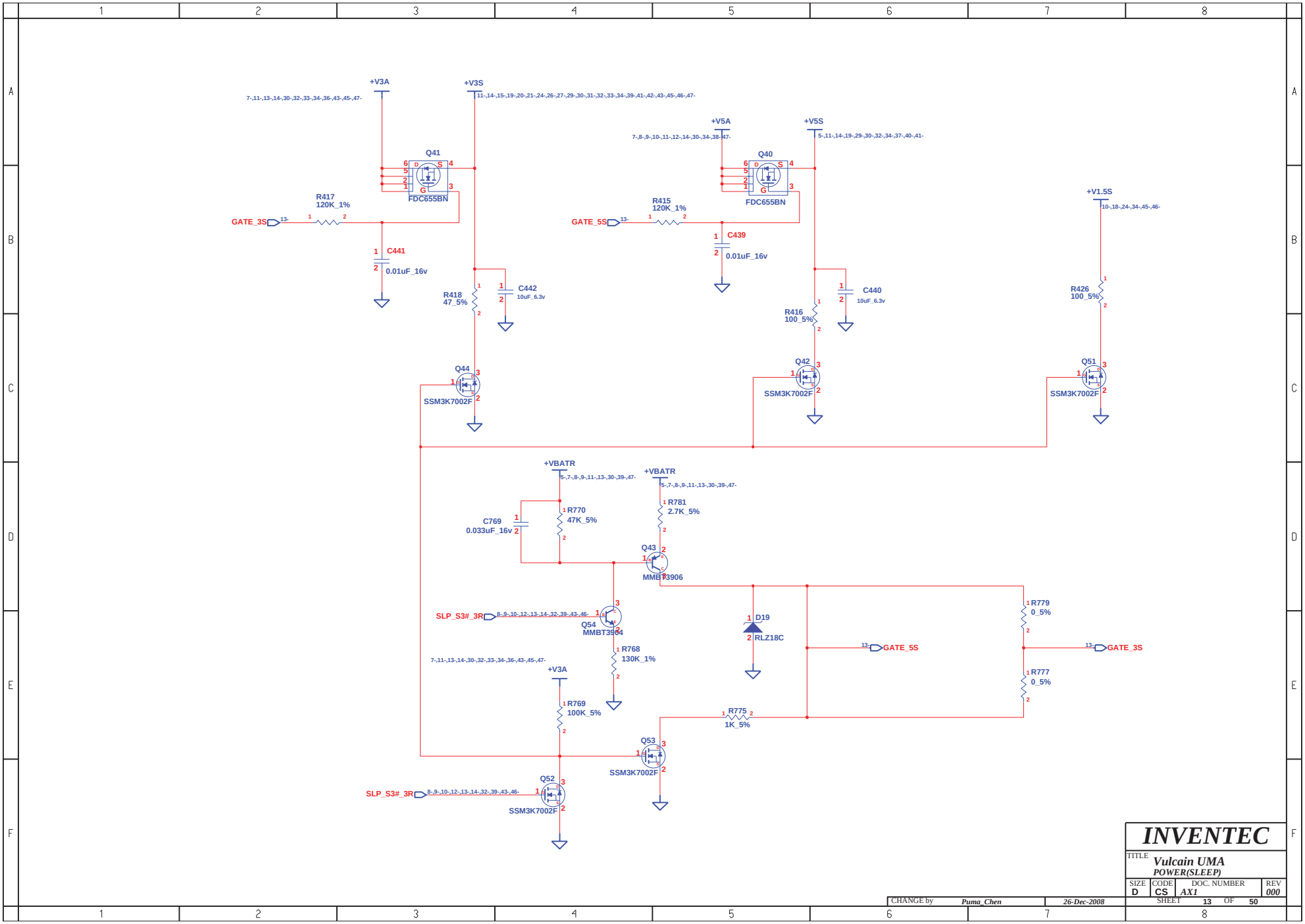

http://laptop-motherboard-schematic.blogspot.com/

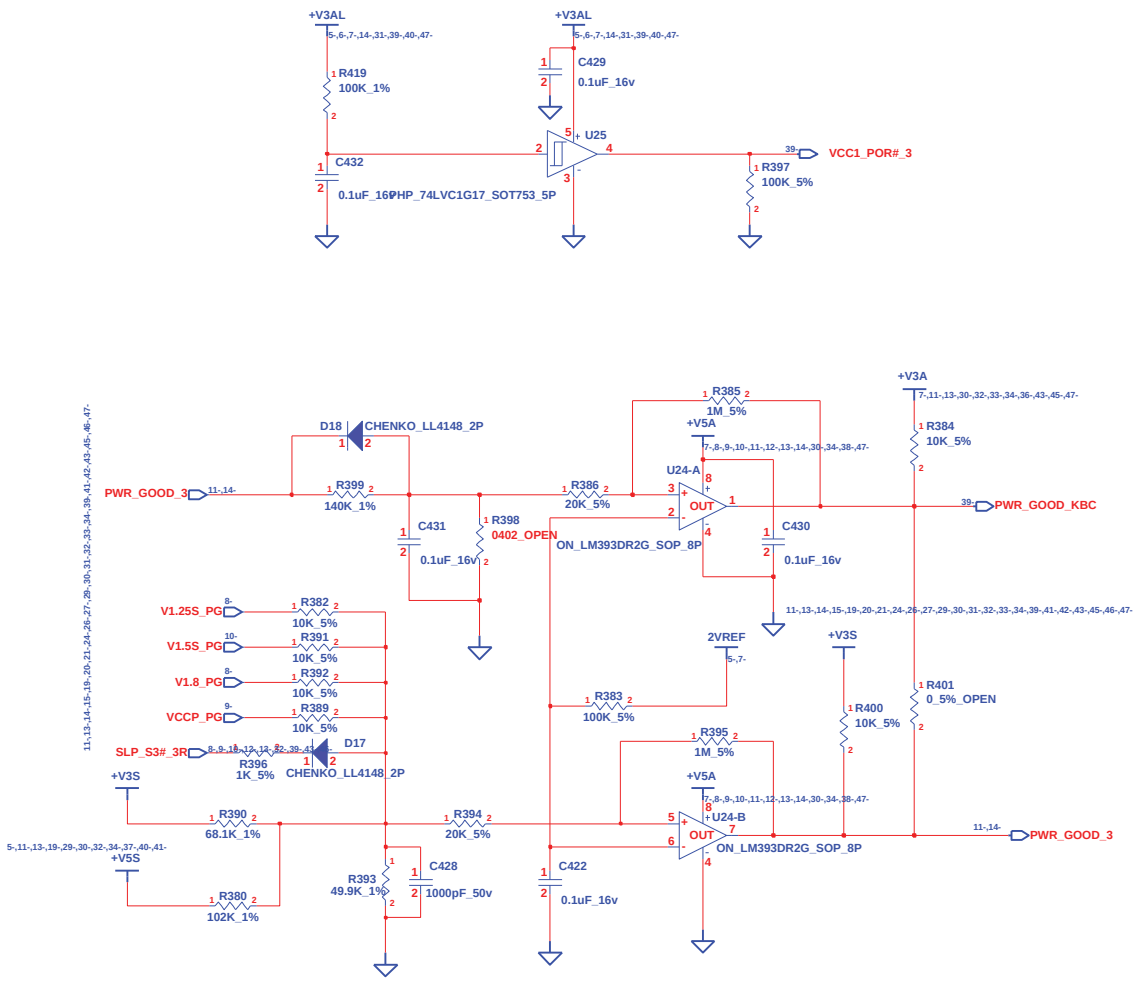

INVENTEC			
TITLE: *Vulcain UMA* *POWER(SEQUENCE)*			
SIZE: D	CODE: CS	DOC. NUMBER: *AX1*	REV: *000*
CHANGE by: *Puma_Chen*	*26-Dec-2008*	SHEET 14 OF 50	

http://laptop-motherboard-schematic.blogspot.com/

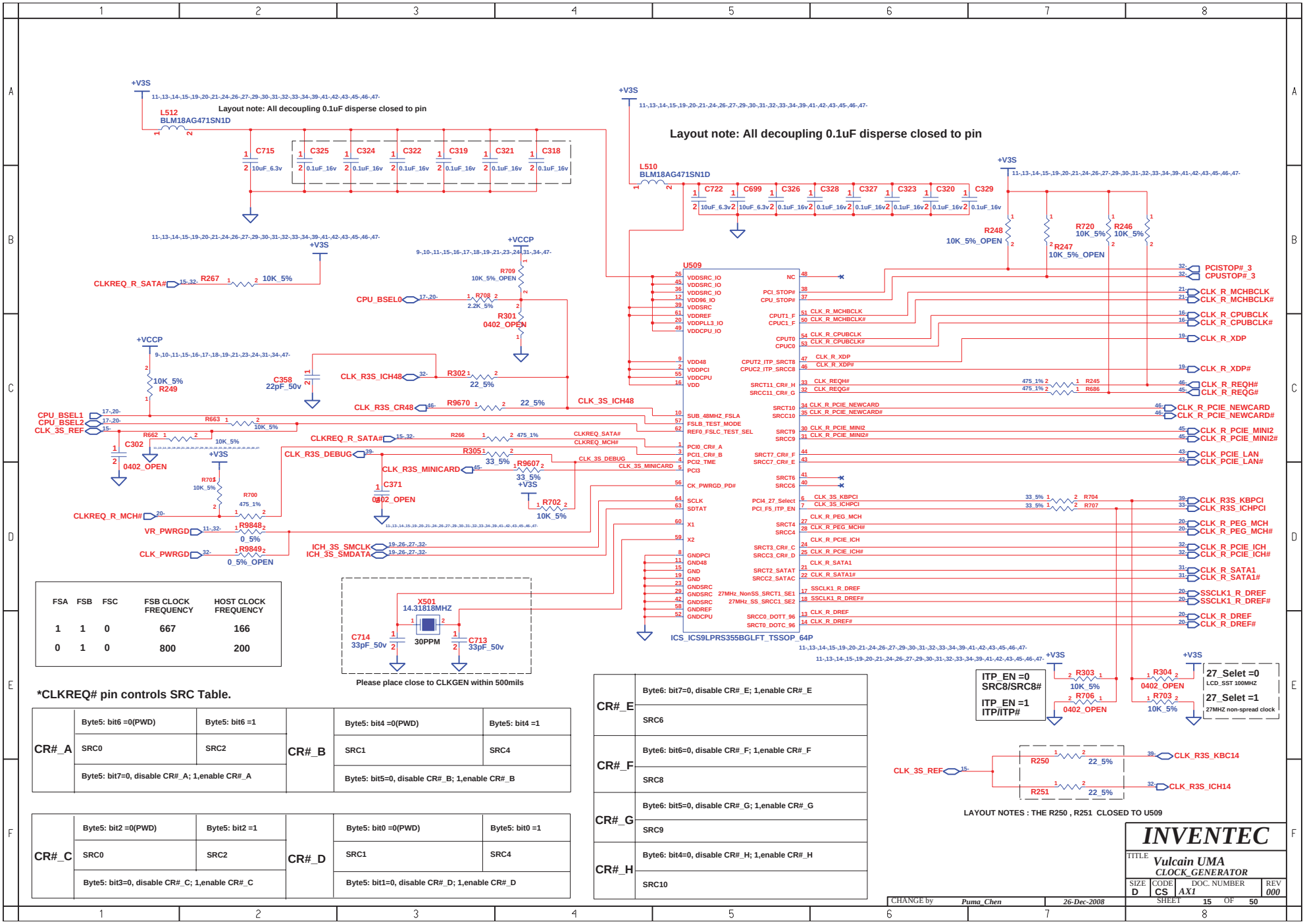

FSA	FSB	FSC	FSB CLOCK FREQUENCY	HOST CLOCK FREQUENCY
1	1	0	667	166
0	1	0	800	200

*CLKREQ# pin controls SRC Table.

CR#_A	Byte5: bit6 =0(PWD)	Byte5: bit6 =1	CR#_B	Byte5: bit4 =0(PWD)	Byte5: bit4 =1
	SRC0	SRC2		SRC1	SRC4
	Byte5: bit7=0, disable CR#_A; 1,enable CR#_A			Byte5: bit5=0, disable CR#_B; 1,enable CR#_B	

CR#_C	Byte5: bit2 =0(PWD)	Byte5: bit2 =1	CR#_D	Byte5: bit0 =0(PWD)	Byte5: bit0 =1
	SRC0	SRC2		SRC1	SRC4
	Byte5: bit3=0, disable CR#_C; 1,enable CR#_C			Byte5: bit1=0, disable CR#_D; 1,enable CR#_D	

CR#_E	Byte6: bit7=0, disable CR#_E; 1,enable CR#_E
	SRC6
CR#_F	Byte6: bit6=0, disable CR#_F; 1,enable CR#_F
	SRC8
CR#_G	Byte6: bit5=0, disable CR#_G; 1,enable CR#_G
	SRC9
CR#_H	Byte6: bit4=0, disable CR#_H; 1,enable CR#_H
	SRC10

http://laptop-motherboard-schematic.blogspot.com/

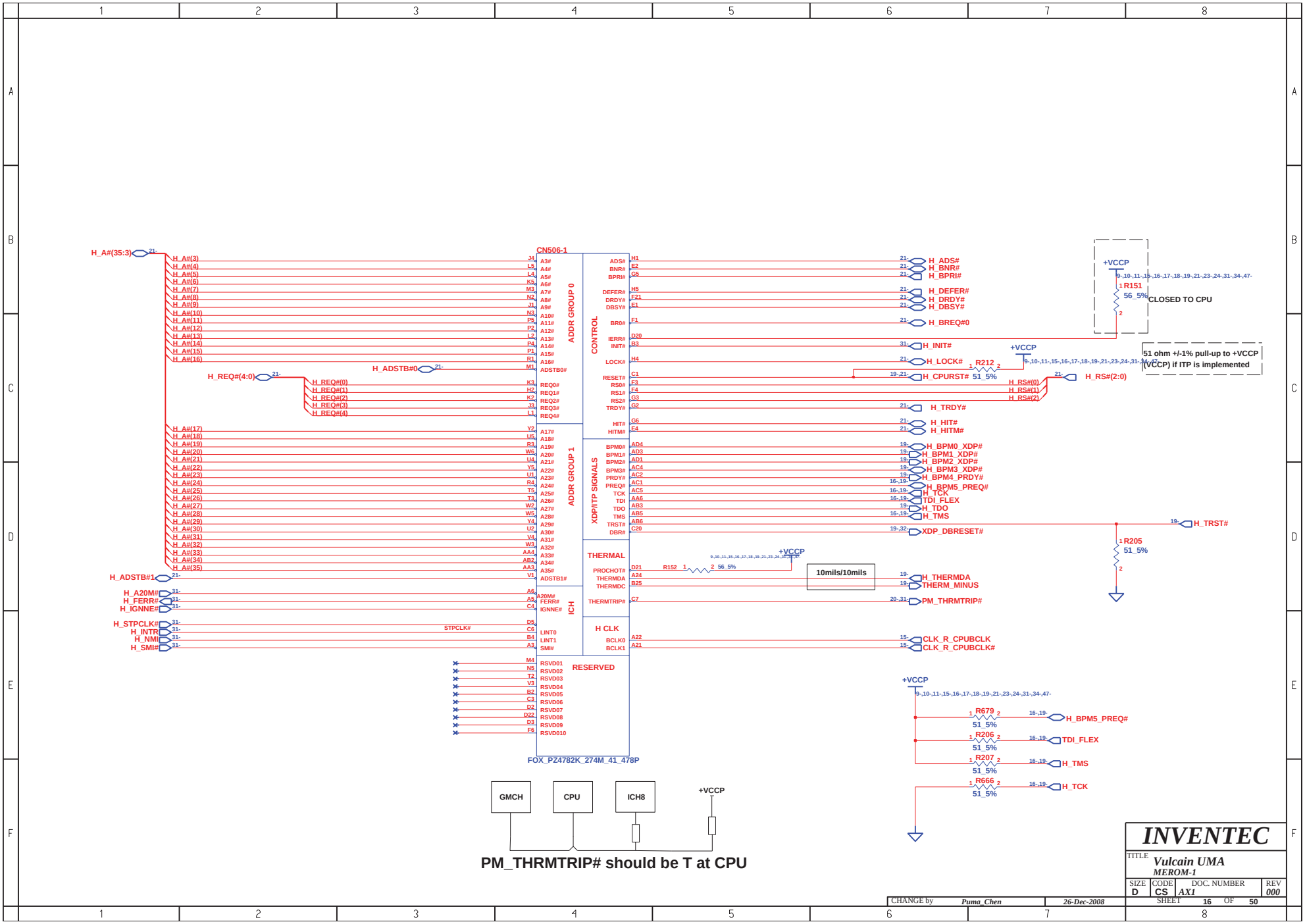

http://laptop-motherboard-schematic.blogspot.com/

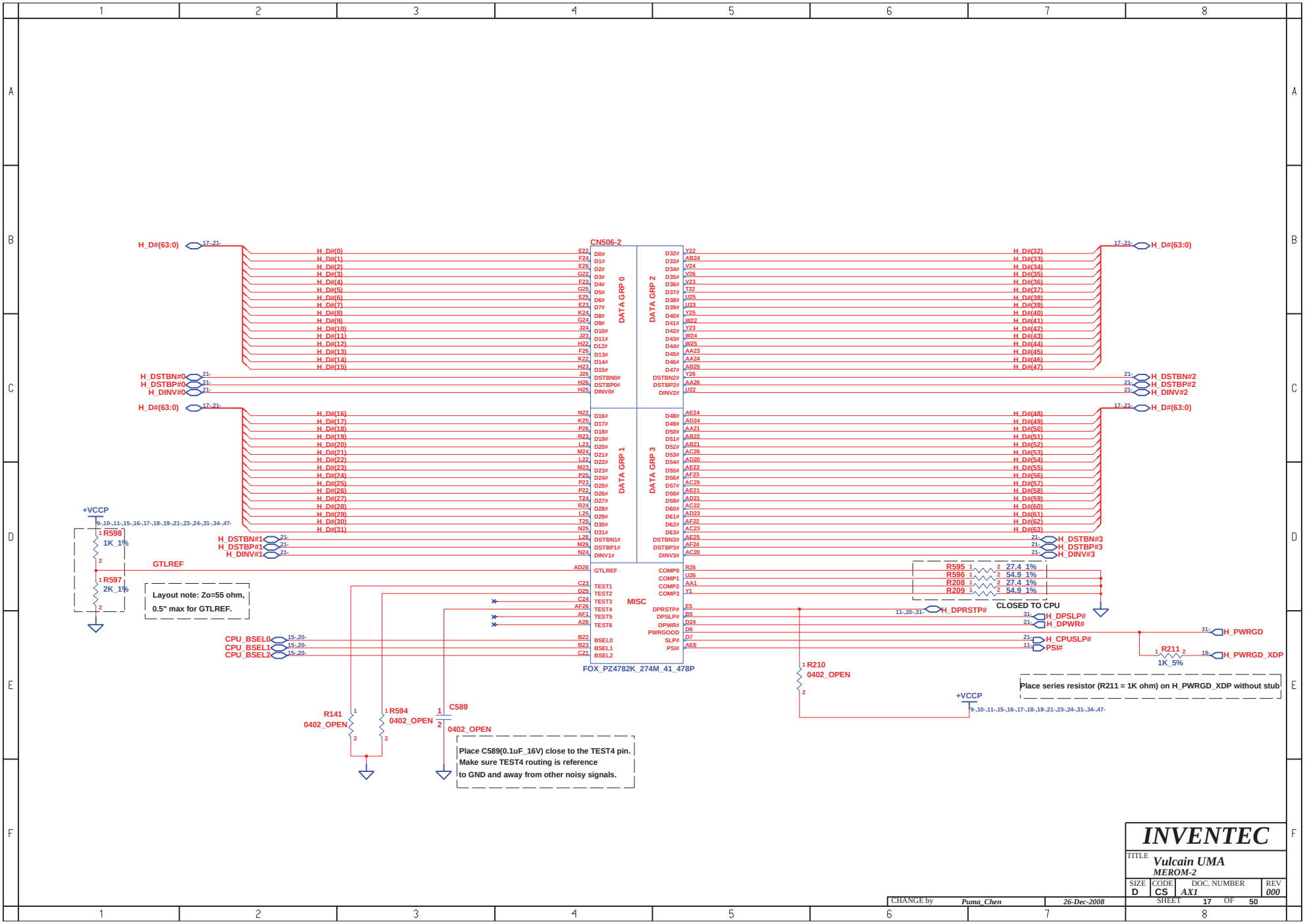

INVENTEC			
TITLE: Vulcain UMA MEROM-2			
SIZE D	CODE CS	DOC. NUMBER AX1	REV 000
CHANGE by Puma_Chen	26-Dec-2008	SHEET 17 OF 50	

http://laptop-motherboard-schematic.blogspot.com/

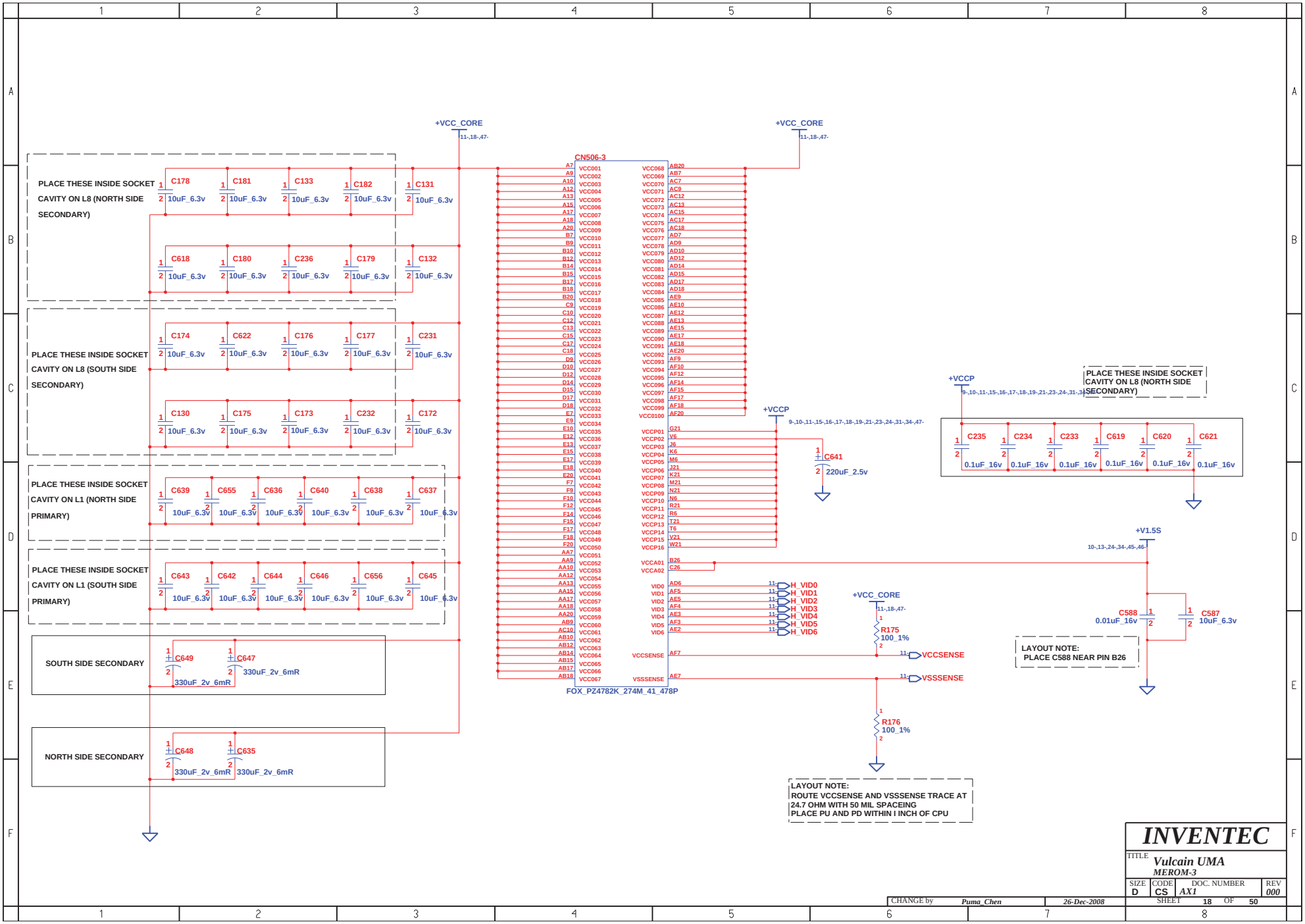

http://laptop-motherboard-schematic.blogspot.com/

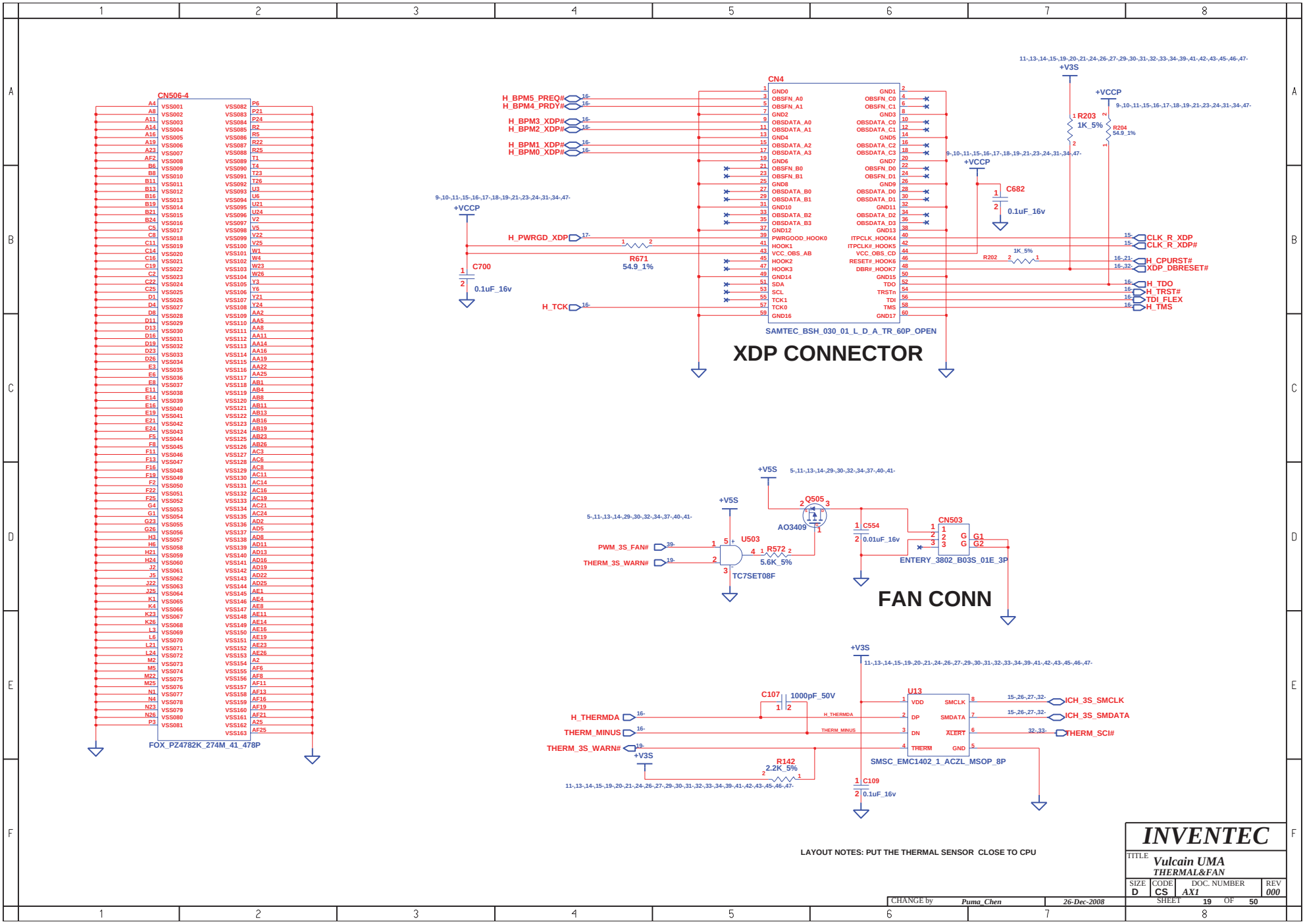

http://laptop-motherboard-schematic.blogspot.com/

MCH_CFG(5)	LOW=DMIx2 HIGH=DMIx4

MCH_CFG(7) (CPU Strap)	LOW=RSVD HIGH=Mobile CPU

MCH_CFG(9) PCIE Graphics Lane	LOW=Reverse Lane HIGH=Normal operation

NOTE : USE 4K-OHM RESISTOR WHEN INSTALLING PULL-UP/PULL-DOWN RESISTOR ON ANY MCH-CFG CONNECTION/PINS.

MCH_CFG(13:12) XOR/ALLZ	00=PARTIAL CLOCK GATING DISABLE 01=XOR MODE ENABLE 10=ALL-Z MODE ENABLE 11=NORMAL OPERATION

MCH_CFG(16) (FSB Dynamic ODT)	LOW=Dynamic ODT Disable HIGH=Dynamic ODT Enable

MCH_CFG(11) PSB 4X CLK ENABLE	LOW=CALISTOGA HIGH=RESERVED

NOTE: CFG[2:0] STRP : 001b : 533 MT/S
011b : 667 MT/S

Note: R569,R570
For Calero : 80.6 ohm
For Crestline : 20 ohm

MCH_CFG(18) VCC SELECT	LOW=1.05V HIGH=1.5V

MCH_CFG(19) (DMI LANE REVERSAL)	LOW=NORMAL HIGH=LANES REVERSED

MCH_CFG(20) (PCIE BACKWARD INTERPOERABILITY MODE	LOW=ONLY SDVO OR PCIE X1 IS OPERATIONAL HIGH=SDVO AND PCIE X1 ARE OPERATING SIMULTANEOUSLY VIA THE PEG PORT

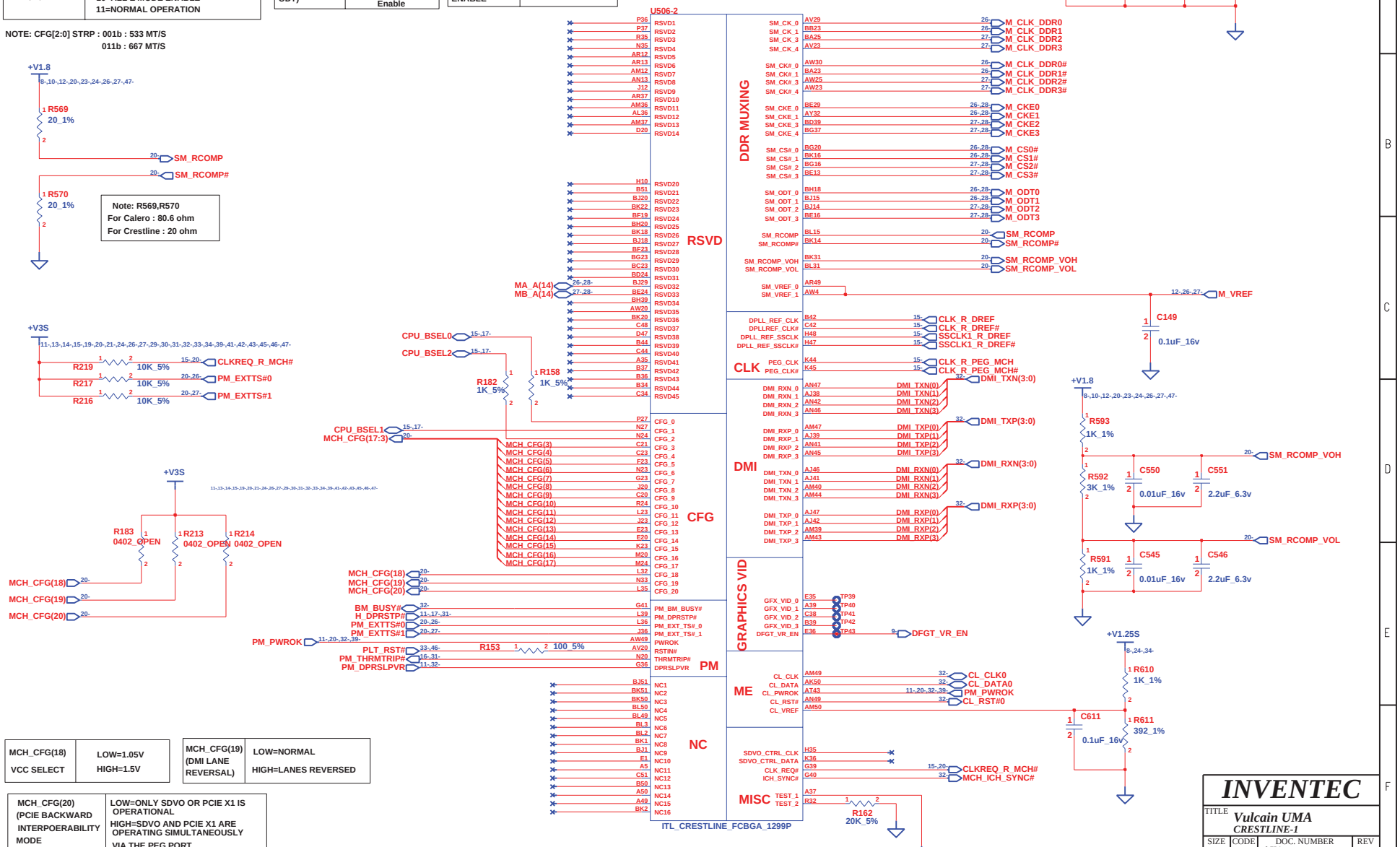

INVENTEC			
TITLE Vulcain UMA CRESTLINE-1			
SIZE D	CODE CS	DOC. NUMBER AX1	REV 000
CHANGE by Puma_Chen	26-Dec-2008	SHEET 20 OF 50	

http://laptop-motherboard-schematic.blogspot.com/

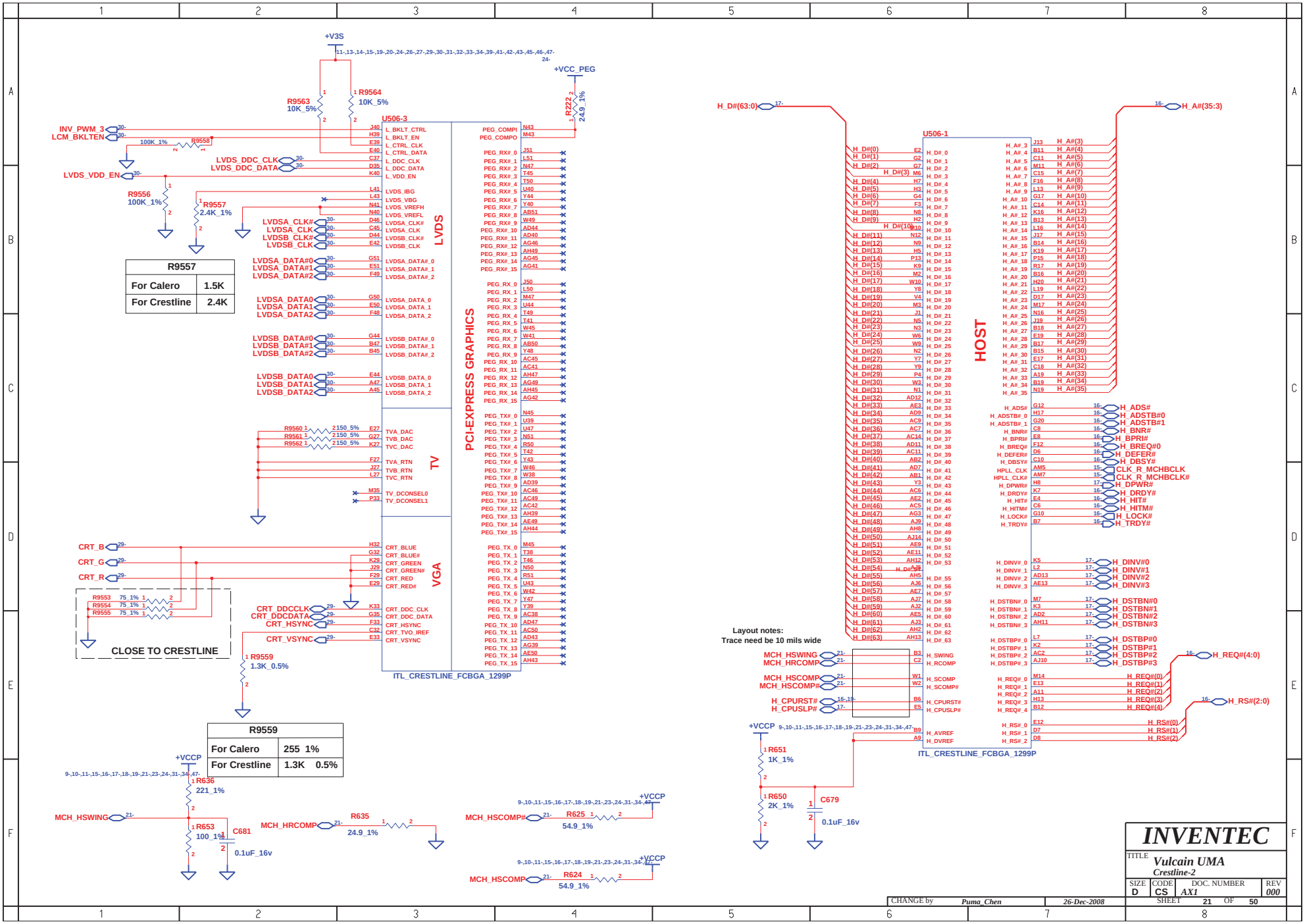

http://laptop-motherboard-schematic.blogspot.com/

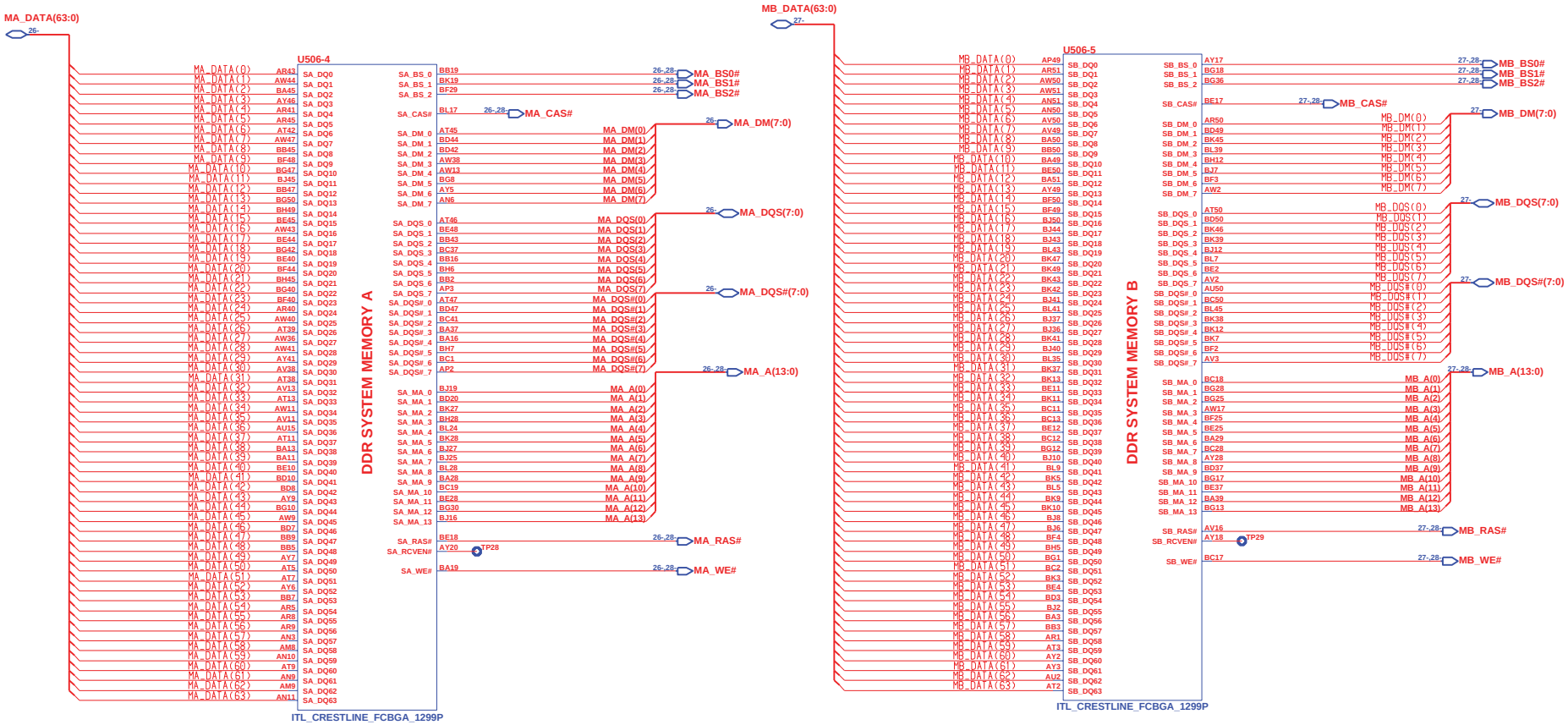

CHANGE by	Puma_Chen	26-Dec-2008	

INVENTEC

TITLE: *Vulcain UMA*
CRESTLINE-3

SIZE	CODE	DOC. NUMBER	REV
D	CS	AX1	000

SHEET 22 OF 50

http://laptop-motherboard-schematic.blogspot.com/

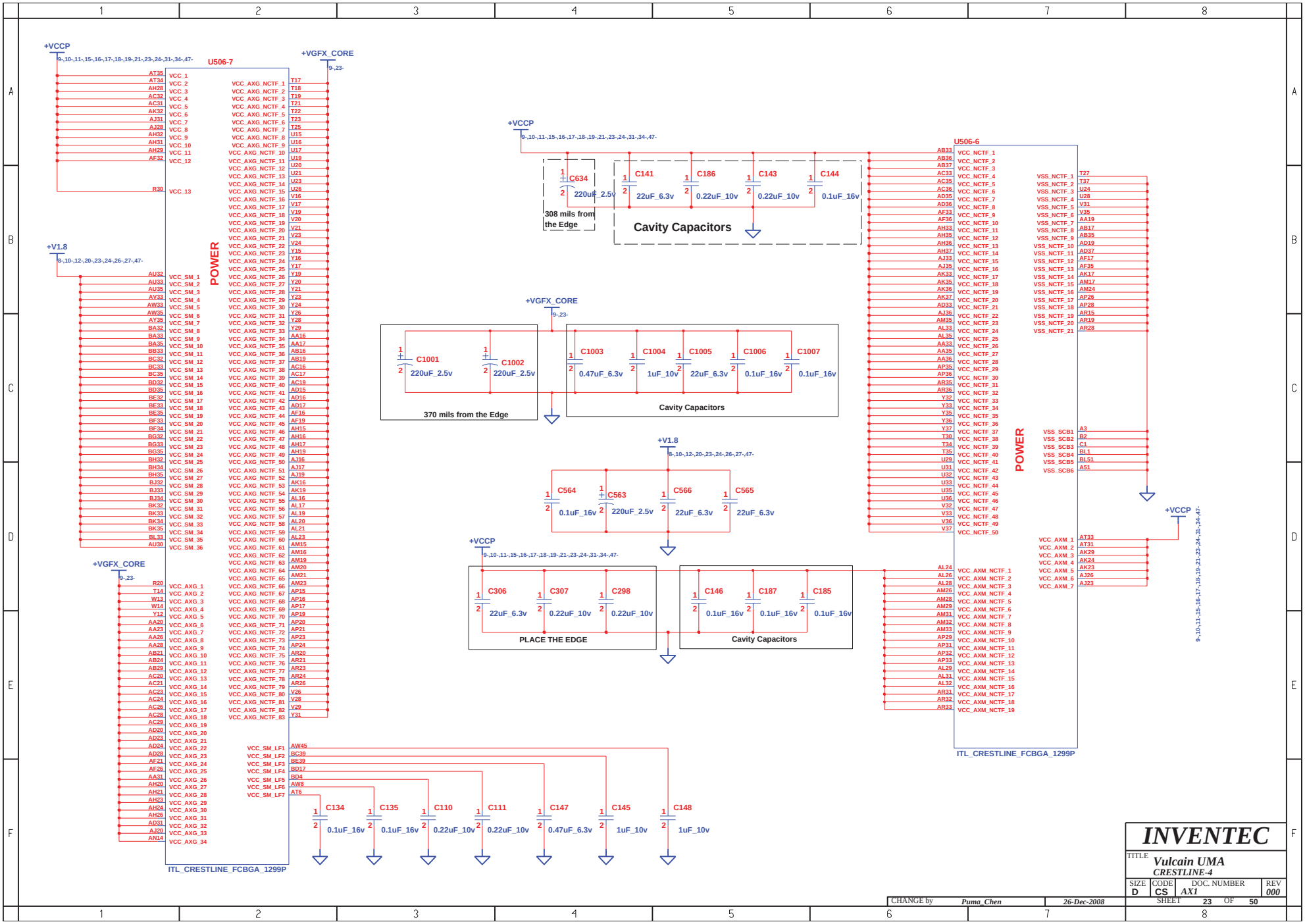

INVENTEC			
TITLE	Vulcain UMA CRESTLINE-4		
SIZE D	CODE CS	DOC. NUMBER AX1	REV 000
CHANGE by Puma_Chen	26-Dec-2008	SHEET 23 OF 50	

http://laptop-motherboard-schematic.blogspot.com/

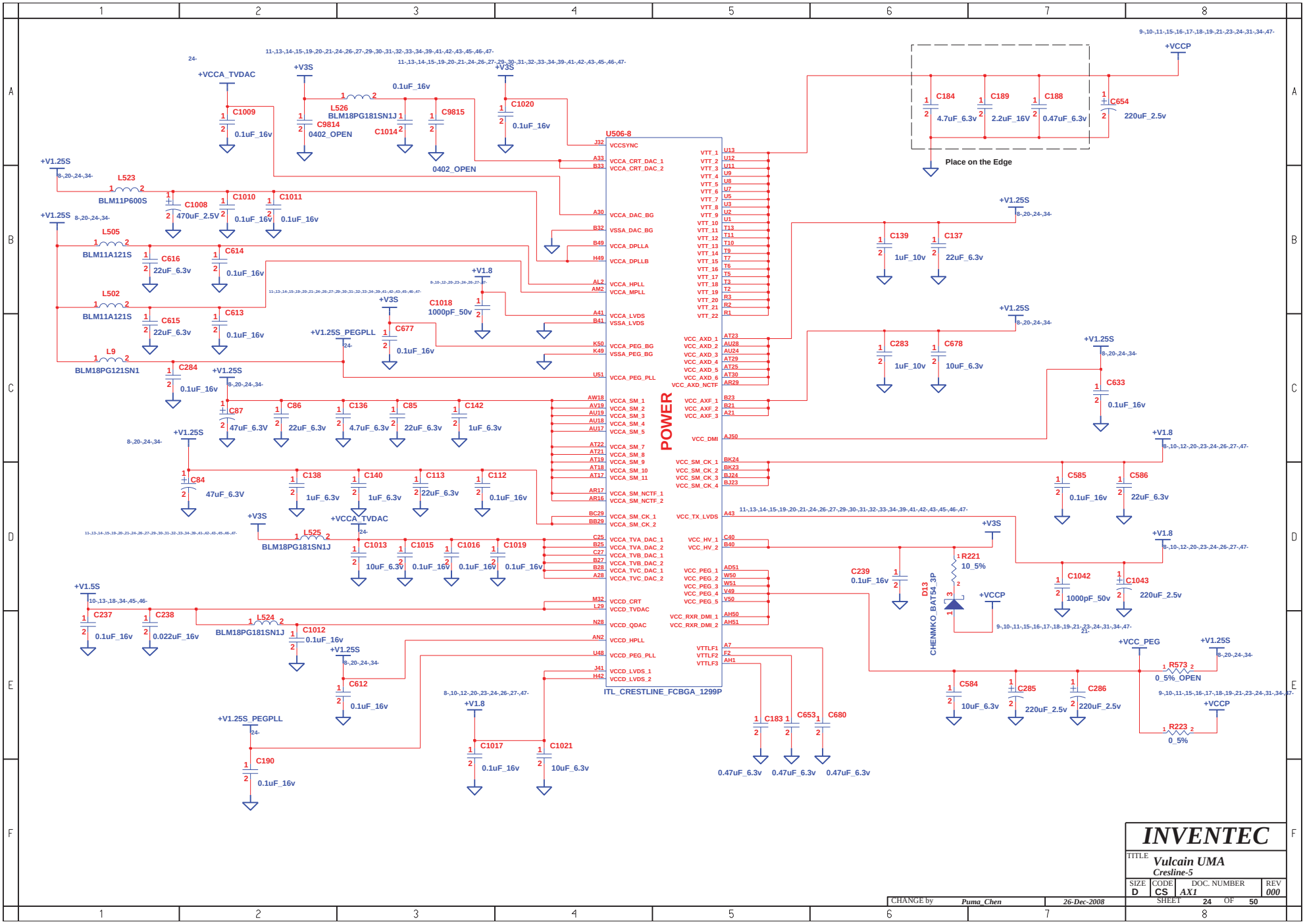

http://laptop-motherboard-schematic.blogspot.com/

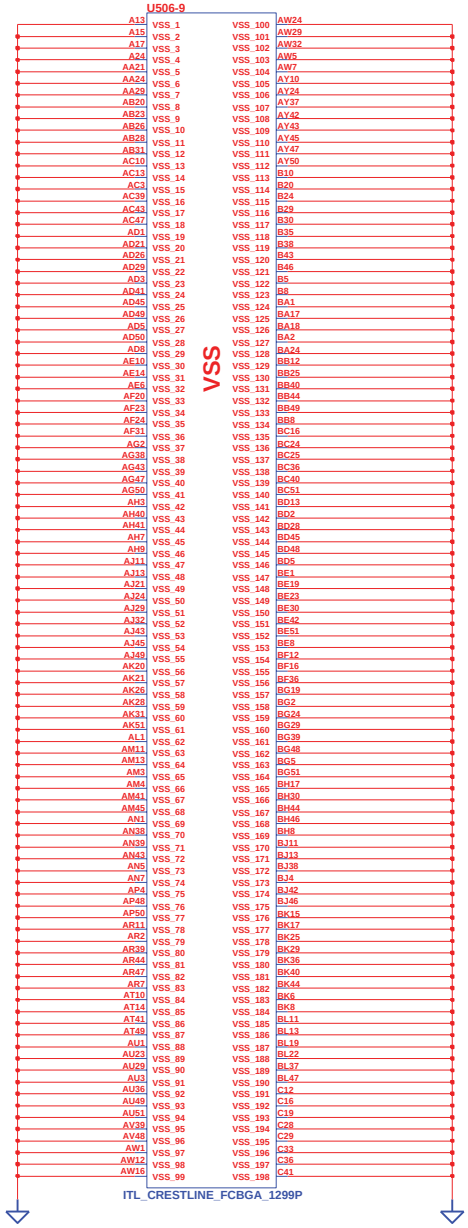

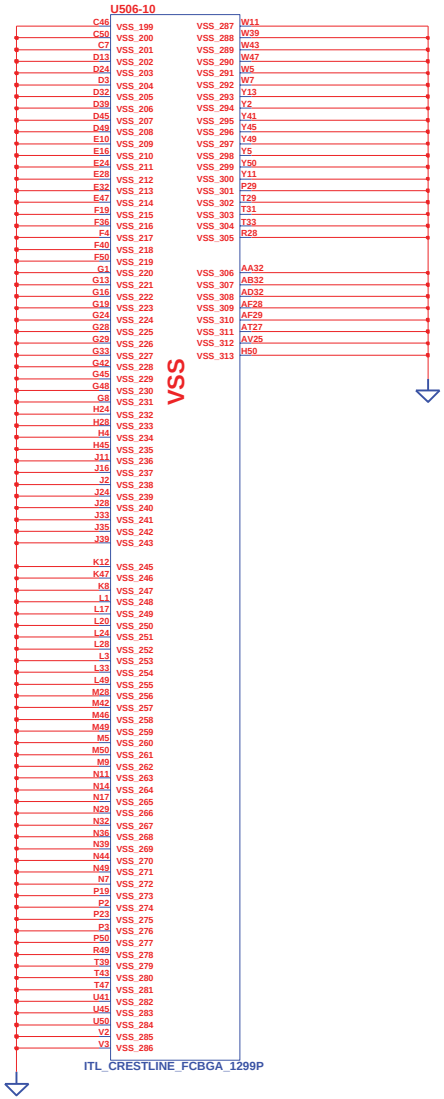

INVENTEC			
TITLE Vulcain UMA CRESTLINE-6			
SIZE D	CODE CS	DOC. NUMBER AX1	REV 000
CHANGE by Puma_Chen	26-Dec-2008	SHEET 25 OF 50	

http://laptop-motherboard-schematic.blogspot.com/

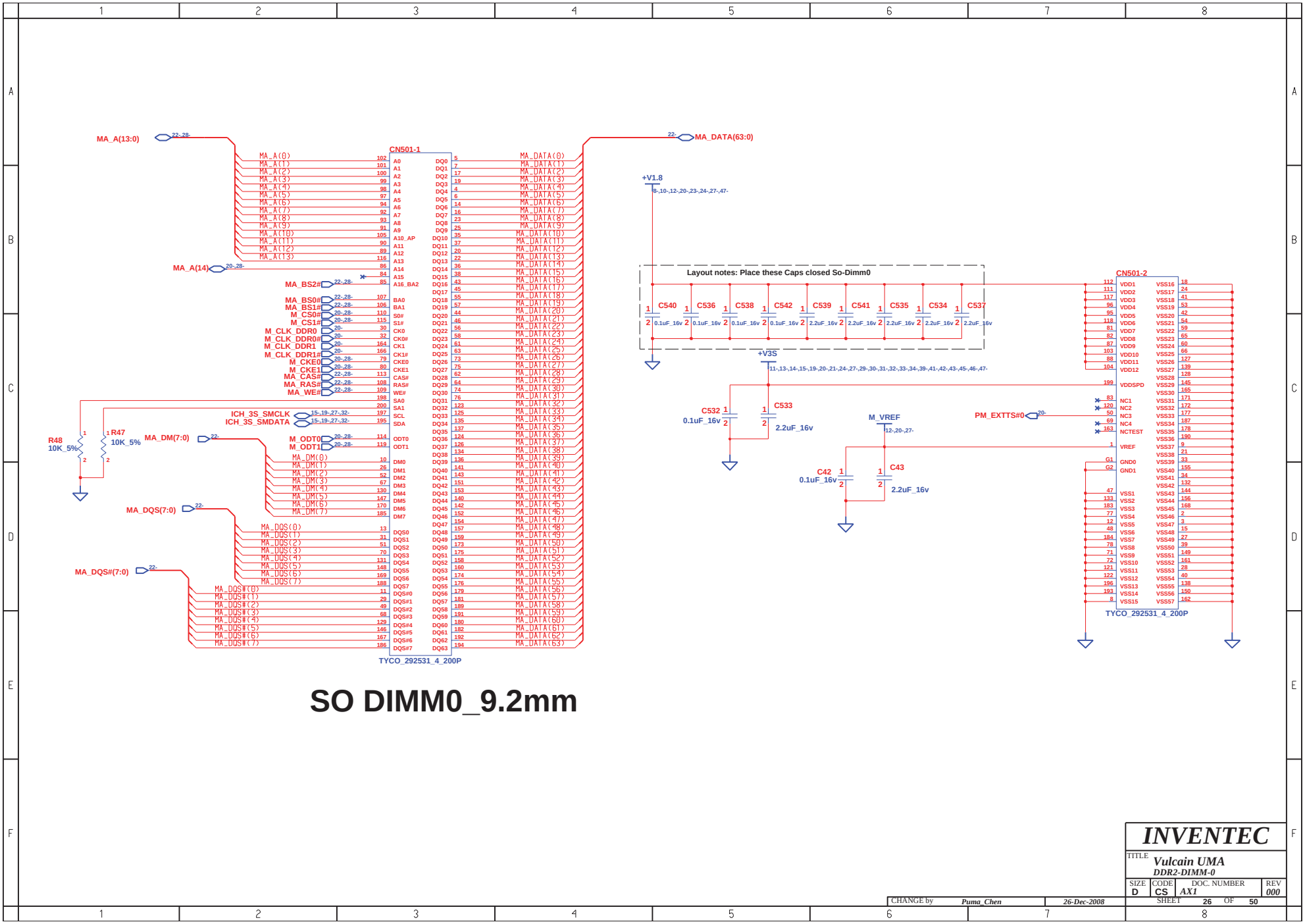

SO DIMM0_9.2mm

http://laptop-motherboard-schematic.blogspot.com/

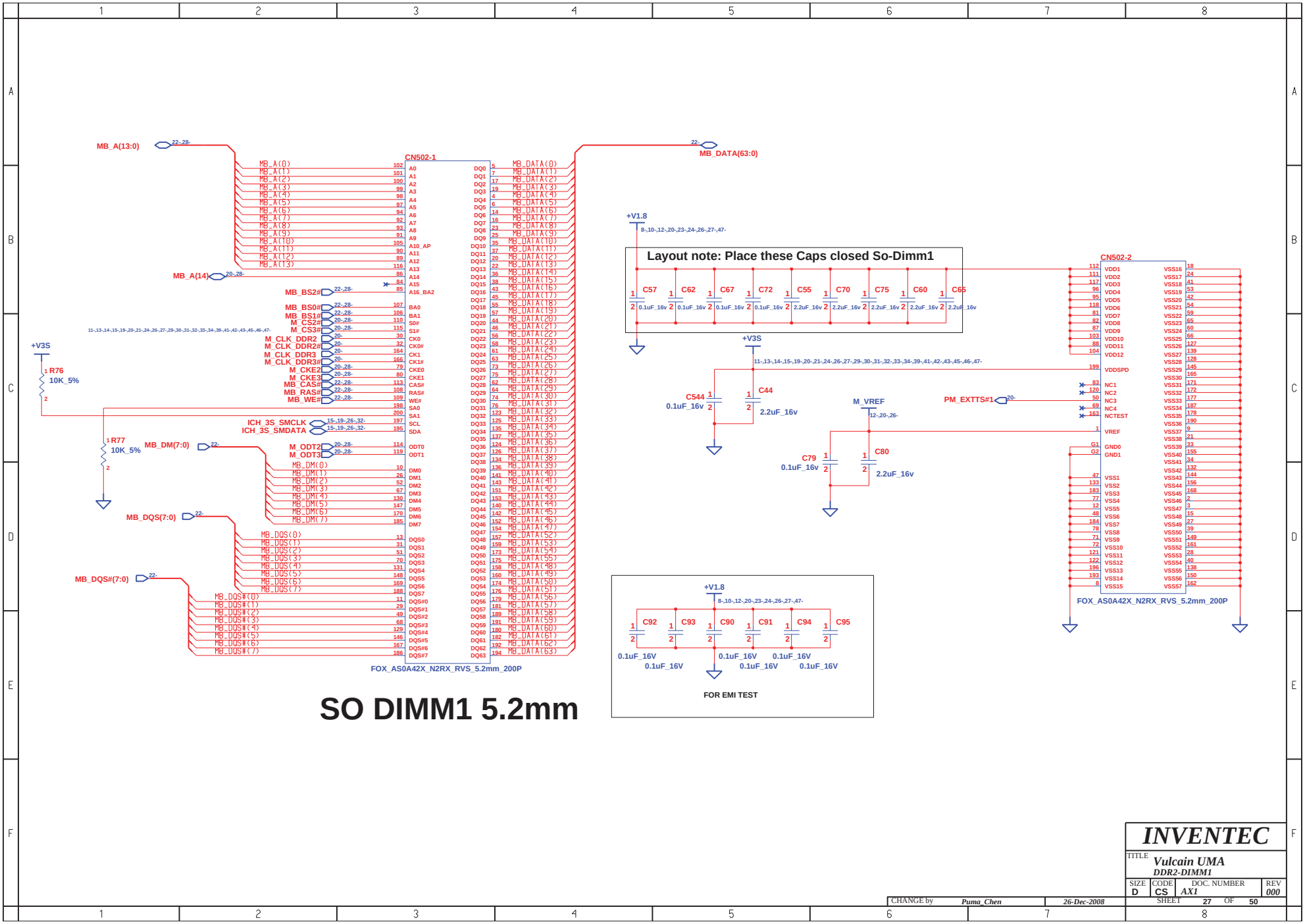

http://laptop-motherboard-schematic.blogspot.com/

http://laptop-motherboard-schematic.blogspot.com/

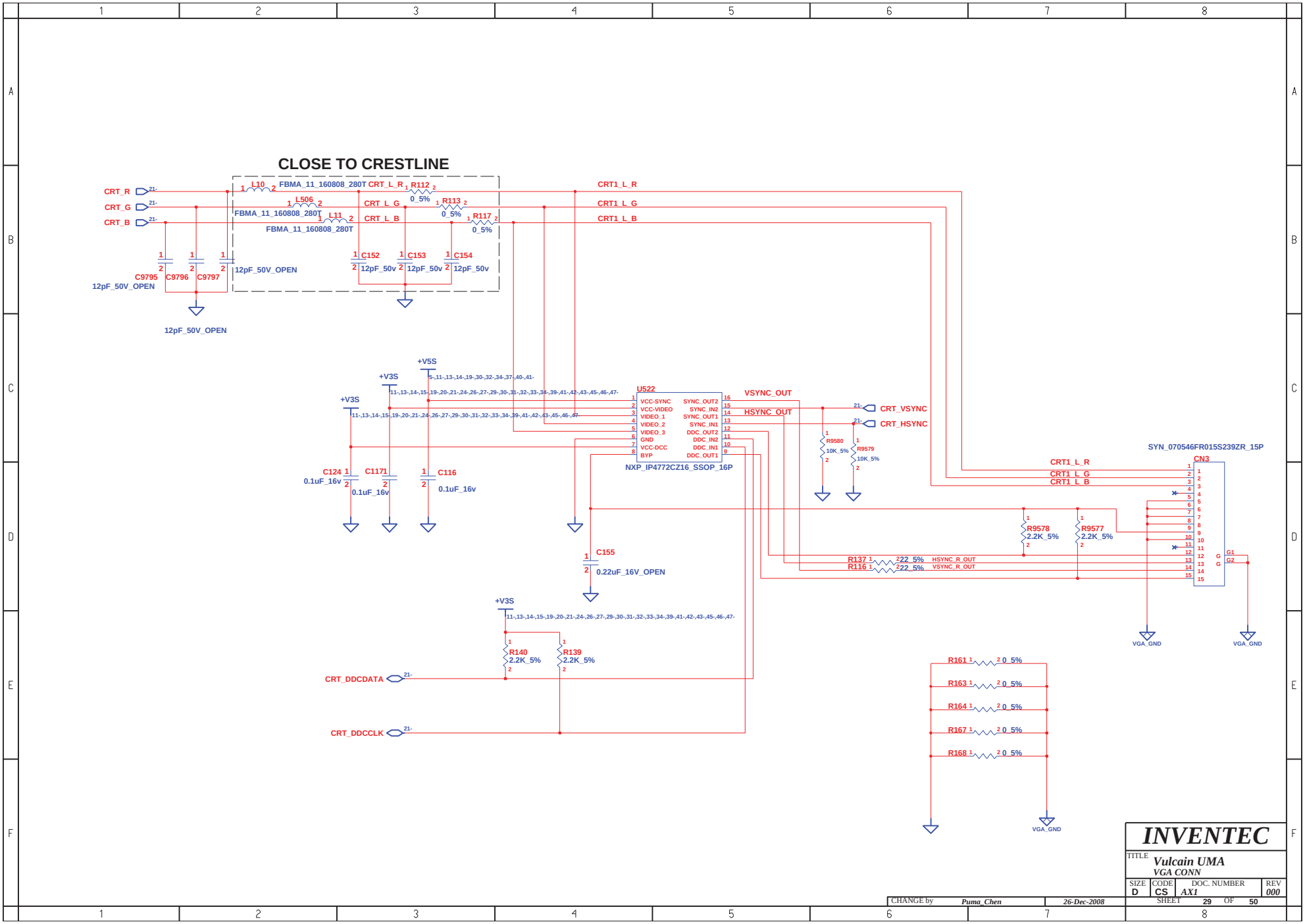

http://laptop-motherboard-schematic.blogspot.com/

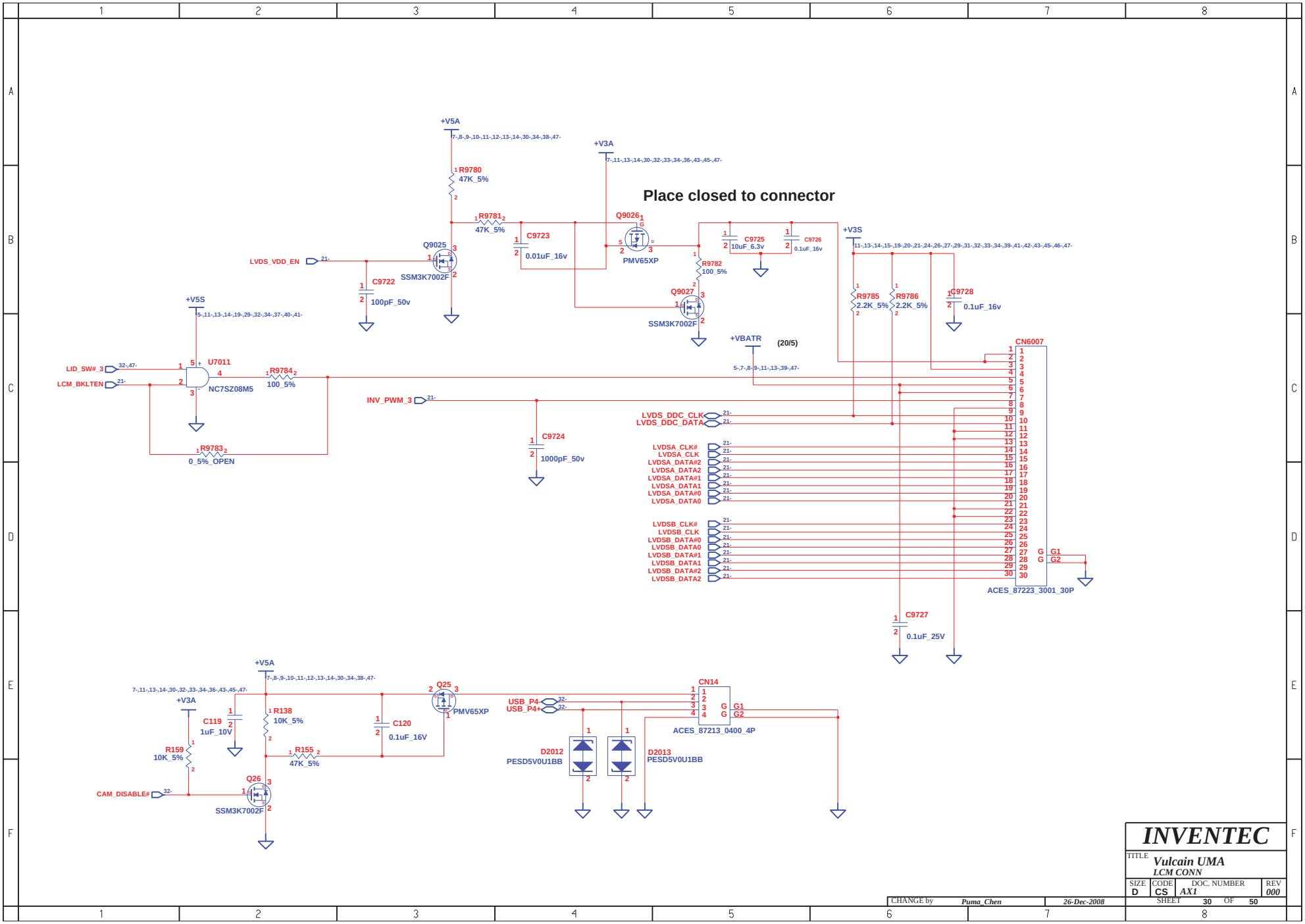

http://laptop-motherboard-schematic.blogspot.com/

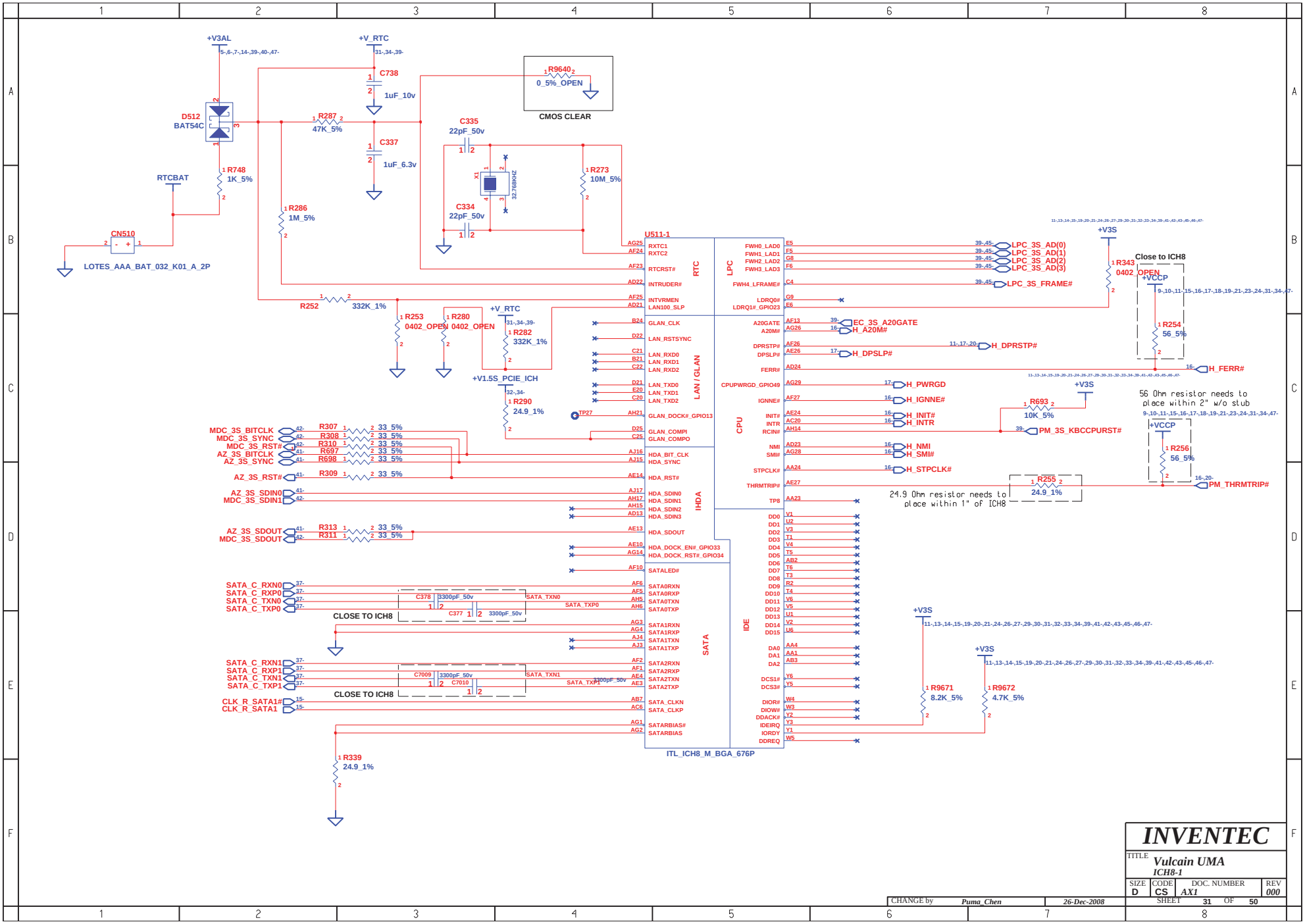

http://laptop-motherboard-schematic.blogspot.com/

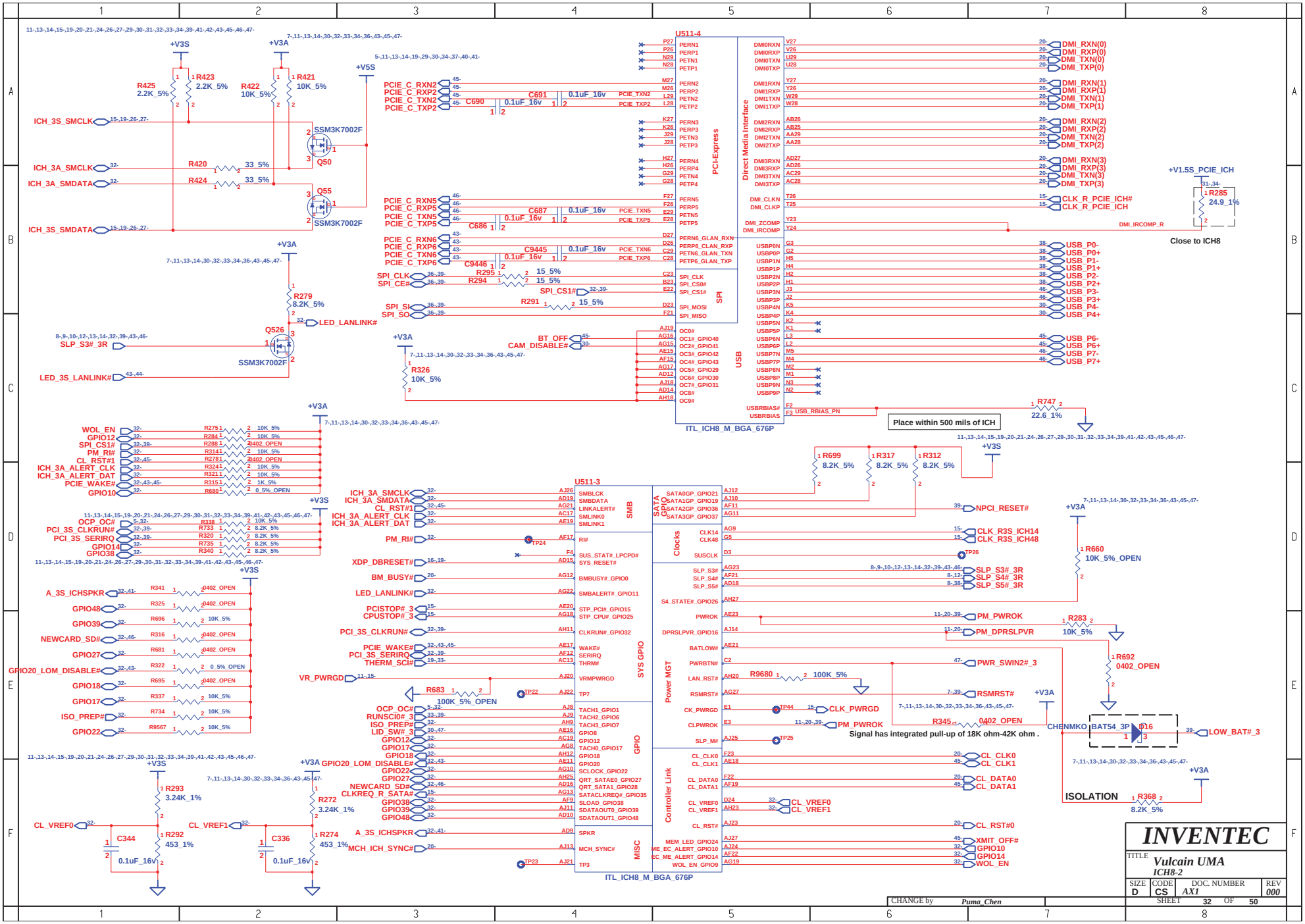

http://laptop-motherboard-schematic.blogspot.com/

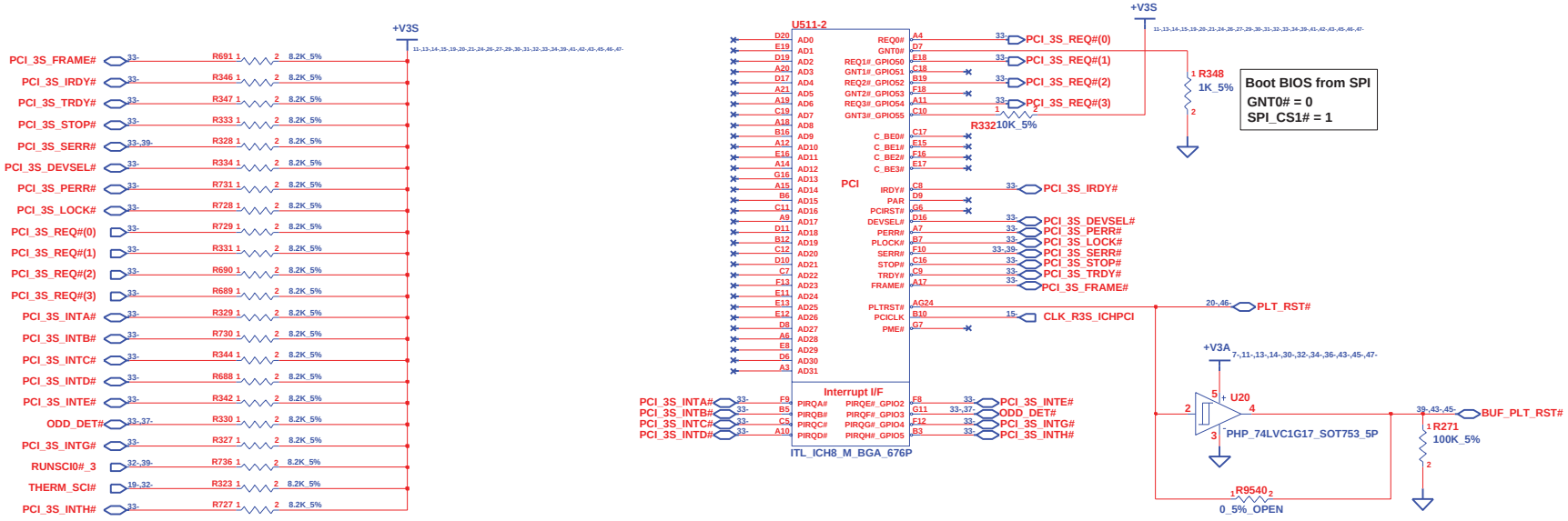

INVENTEC			
TITLE Vulcain UMA ICH8-3			
SIZE D	CODE CS	DOC. NUMBER AX1	REV 000
CHANGE by Puma_Chen	26-Dec-2008	SHEET 33 OF 50	

http://laptop-motherboard-schematic.blogspot.com/

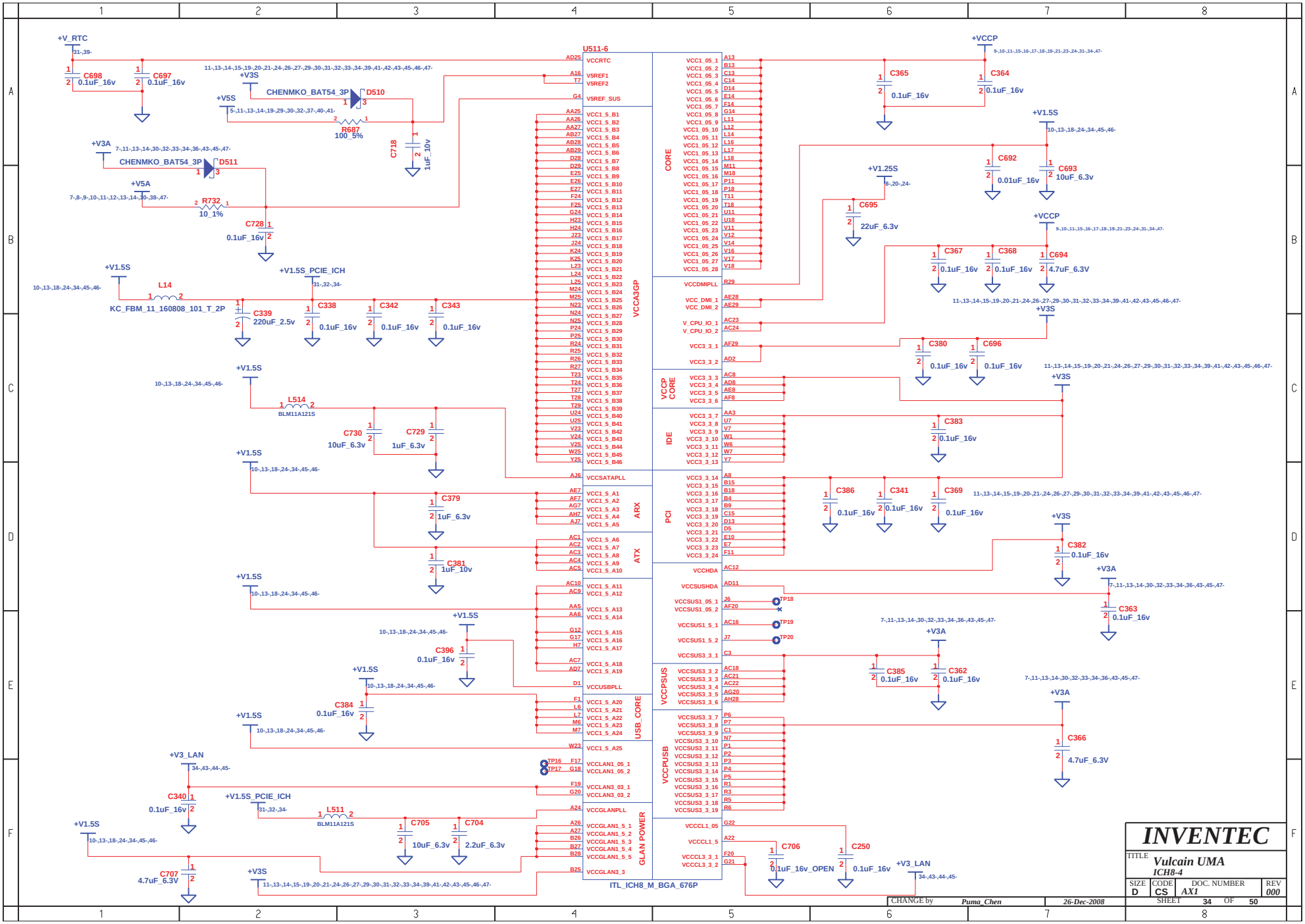

http://laptop-motherboard-schematic.blogspot.com/

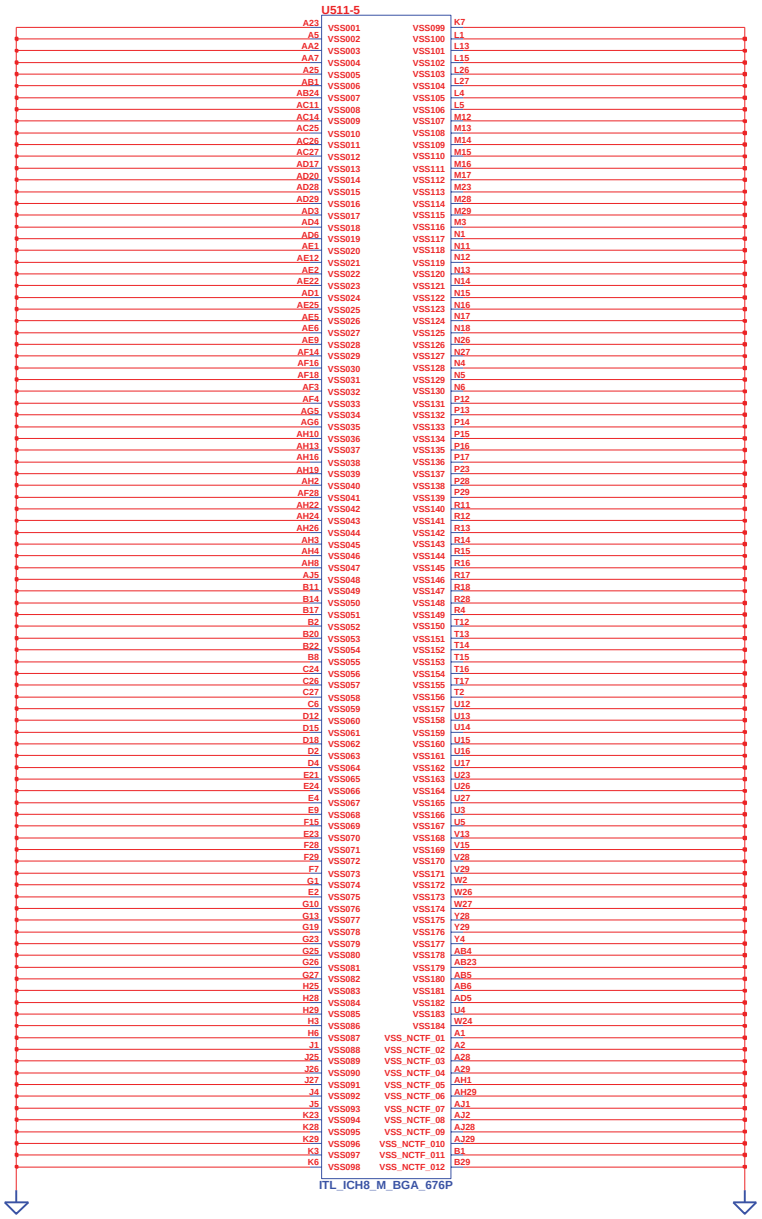

CHANGE by	Puma_Chen	26-Dec-2008	

INVENTEC

TITLE: Vulcain UMA
ICH8-5

SIZE	CODE	DOC. NUMBER	REV
D	CS	AX1	000

SHEET 35 OF 50

http://laptop-motherboard-schematic.blogspot.com/

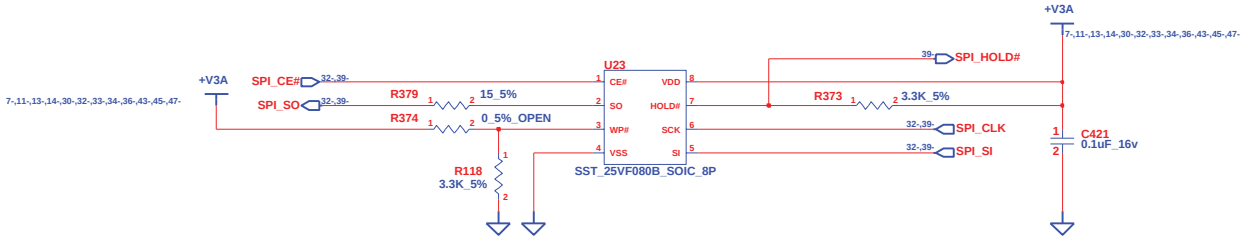

INVENTEC			
TITLE Vulcain UMA SYSTEM BIOS&ODD EXT/B			
SIZE D	CODE CS	DOC. NUMBER AX1	REV 000
CHANGE by Puma_Chen	26-Dec-2008	SHEET 36 OF 50	

http://laptop-motherboard-schematic.blogspot.com/

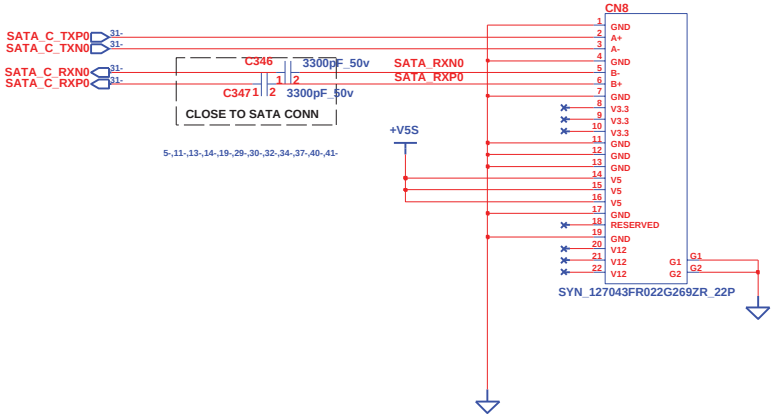

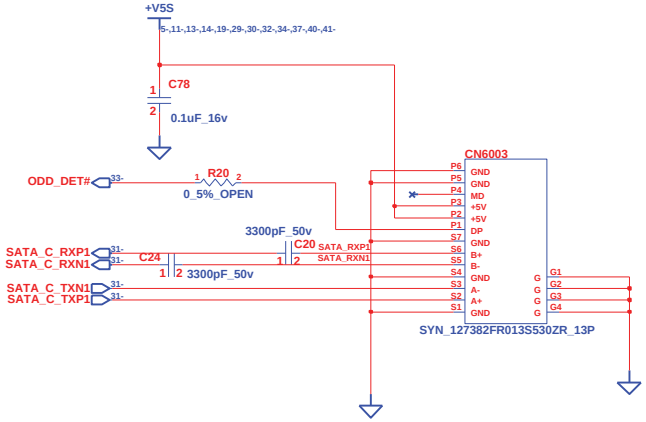

INVENTEC			
TITLE	Vulcain UMA HDD & ODD CONN		
SIZE D	CODE CS	DOC. NUMBER AX1	REV 000
CHANGE by Puma_Chen	26-Dec-2008	SHEET 37 OF 50	

http://laptop-motherboard-schematic.blogspot.com/

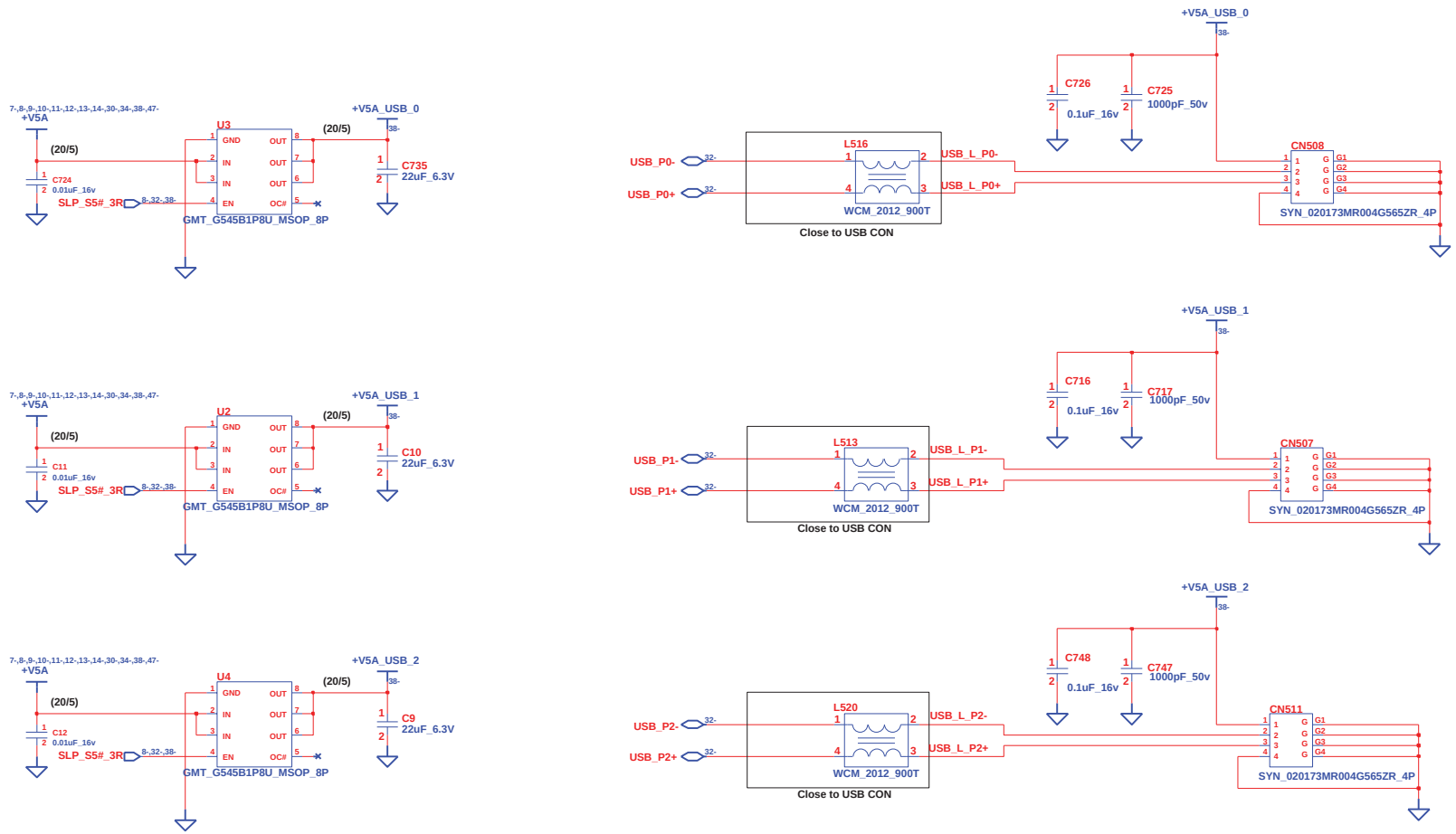

Close to USB CON

CHANGE by	Puma_Chen	26-Dec-2008	

INVENTEC

TITLE: *Vulcain UMA*
USB CONN

SIZE	CODE	DOC. NUMBER	REV
D	CS	AX1	000

SHEET 38 OF 50

http://laptop-motherboard-schematic.blogspot.com/

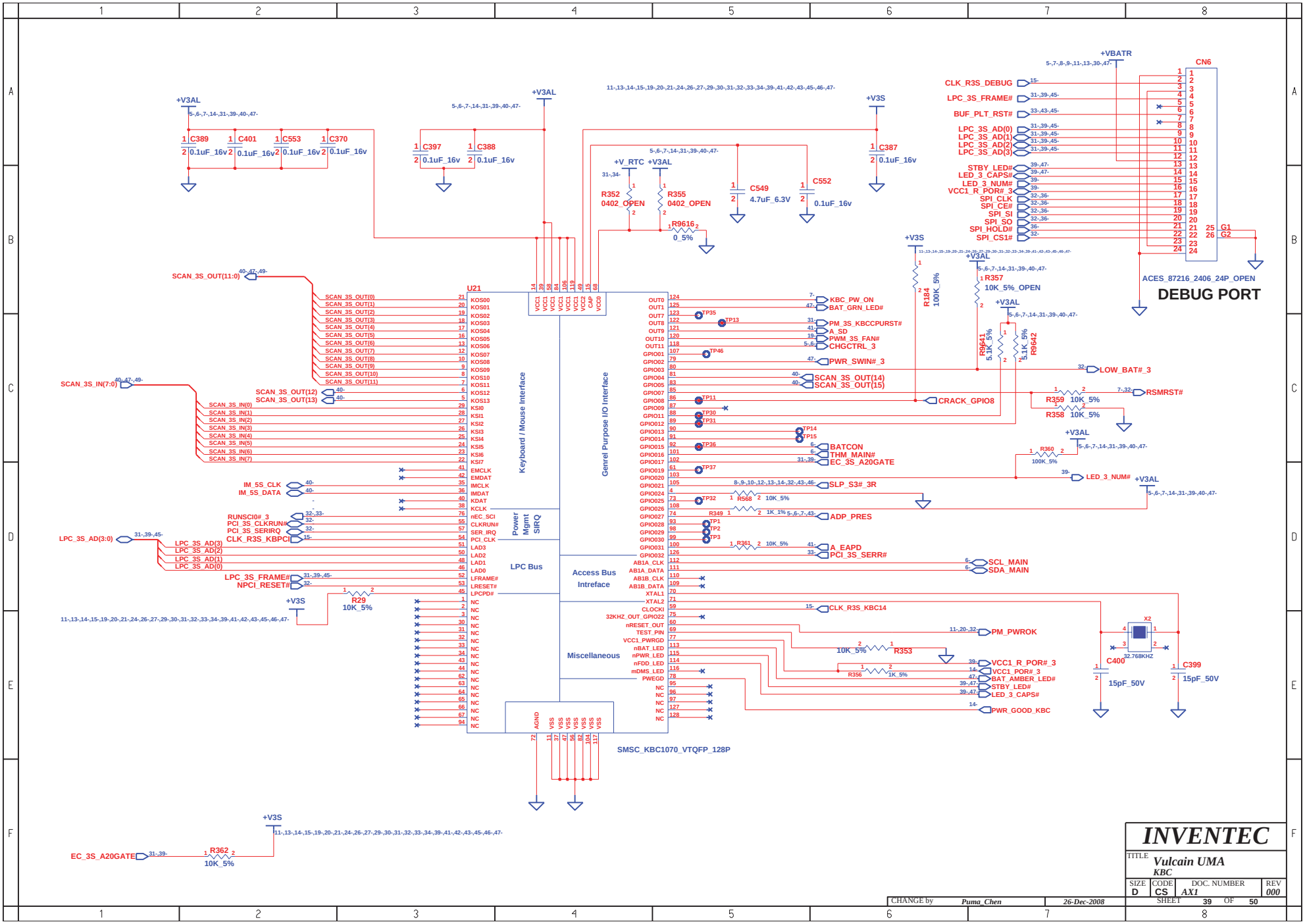

http://laptop-motherboard-schematic.blogspot.com/

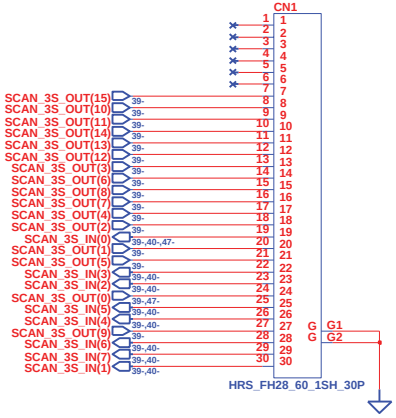

KEYBOARD CONN

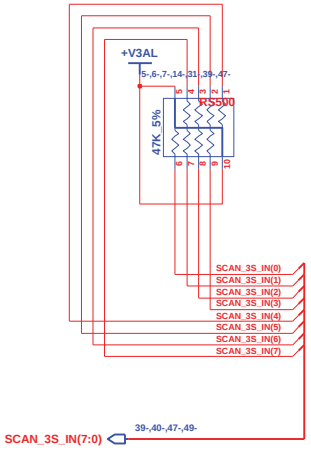

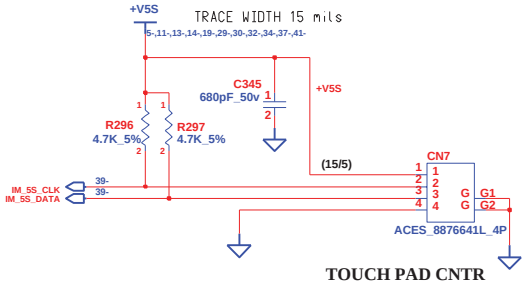

TOUCH PAD CNTR

CHANGE by	Puma_Chen	26-Dec-2008	

INVENTEC

TITLE *Vulcain UMA*
KB & TP CONN

SIZE	CODE	DOC. NUMBER	REV
D	CS	AX1	000

SHEET 40 OF 50

http://laptop-motherboard-schematic.blogspot.com/

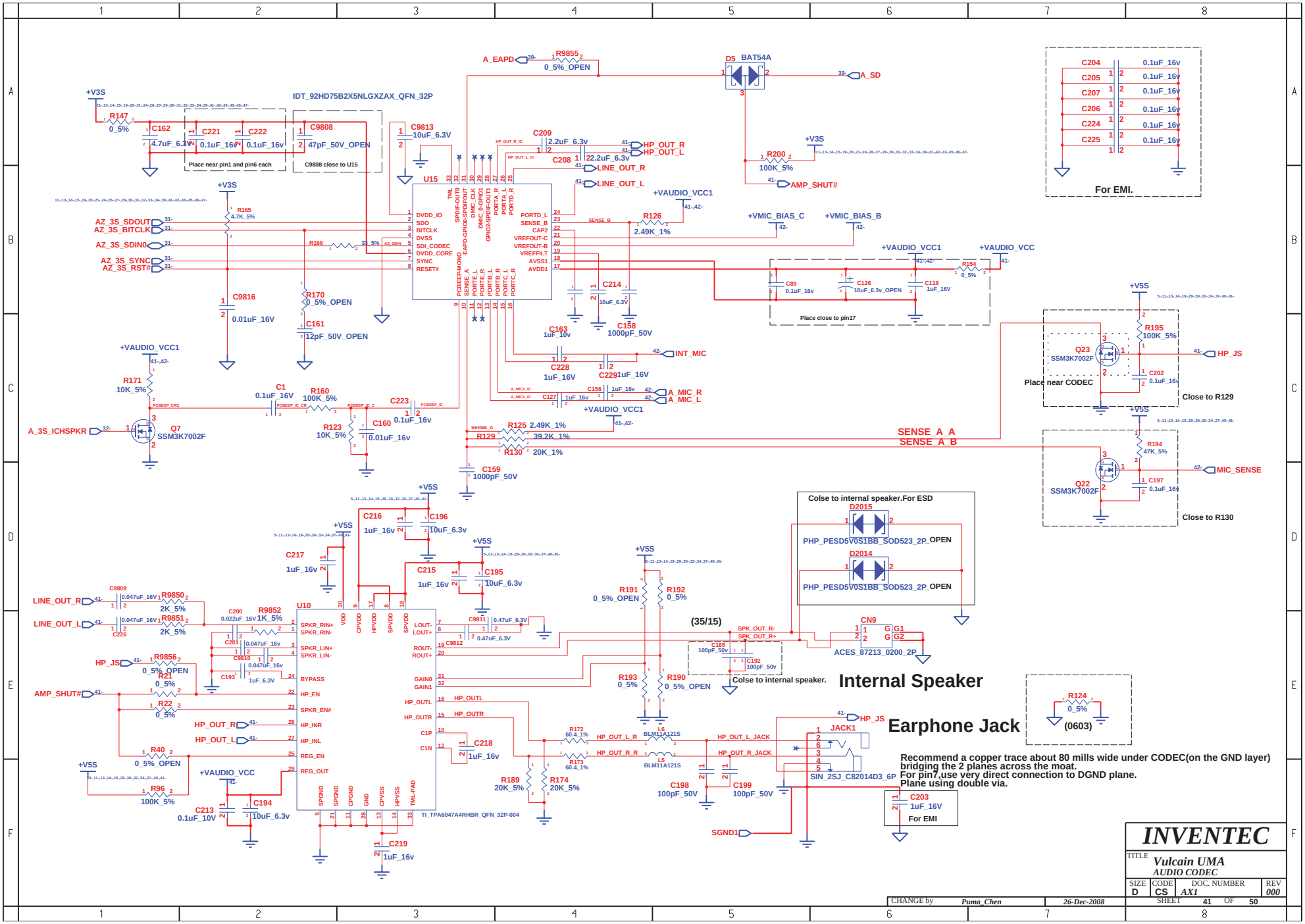

http://laptop-motherboard-schematic.blogspot.com/

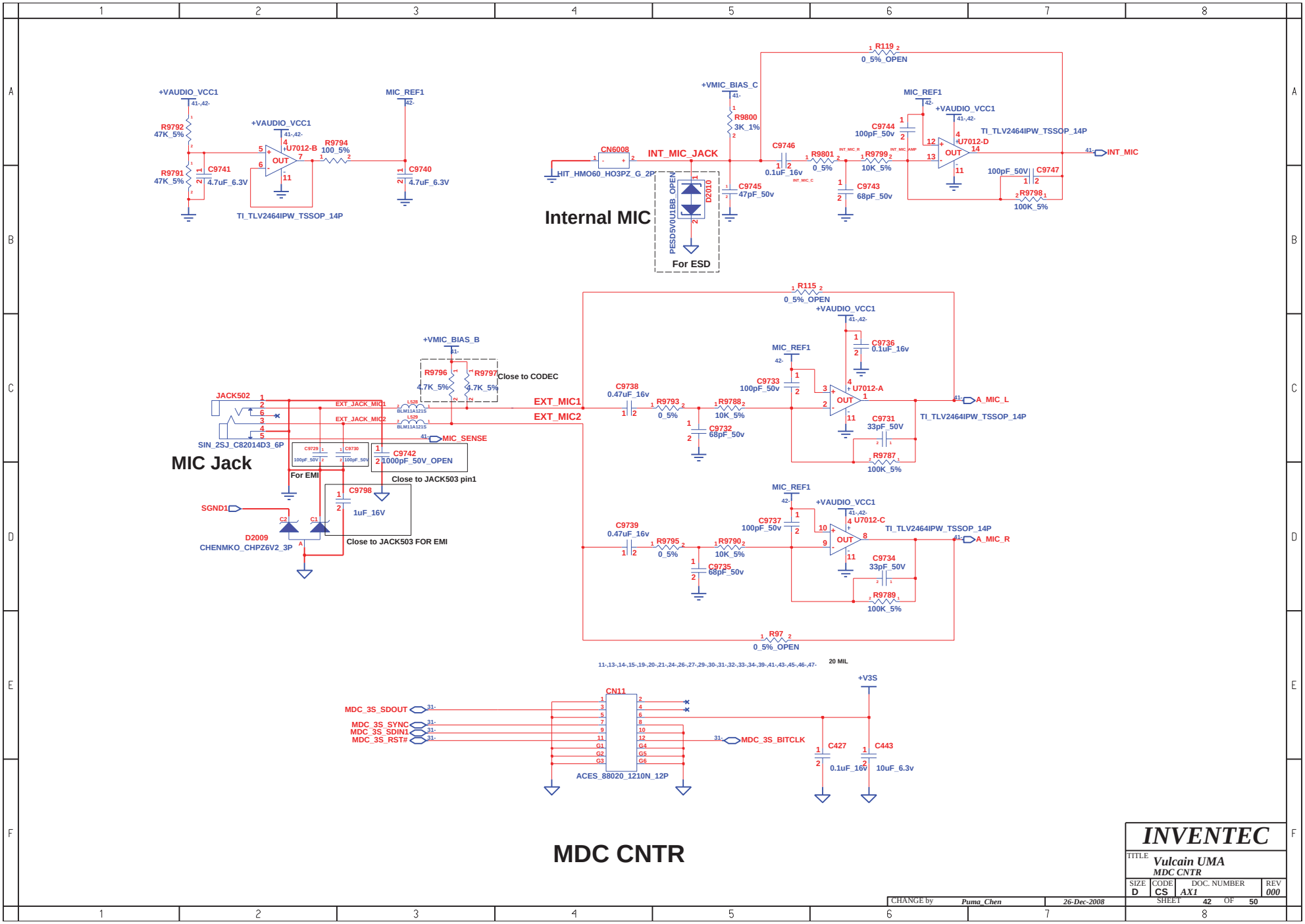

http://laptop-motherboard-schematic.blogspot.com/

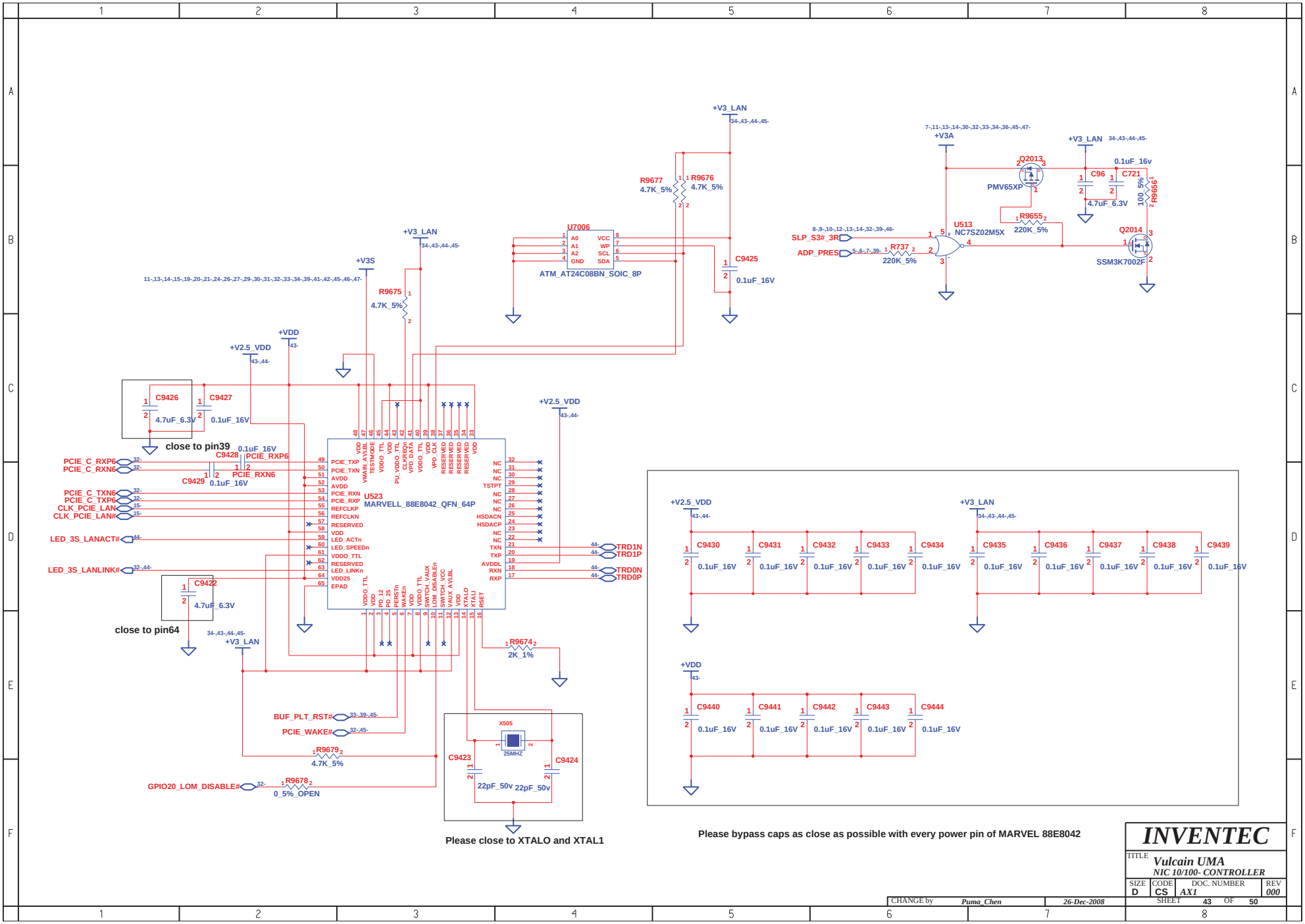

INVENTEC

TITLE: Vulcain UMA
NIC 10/100- CONTROLLER

SIZE	CODE	DOC. NUMBER	REV
D	CS	AX1	000

CHANGE by: Puma_Chen 26-Dec-2008

SHEET 43 OF 50

http://laptop-motherboard-schematic.blogspot.com/

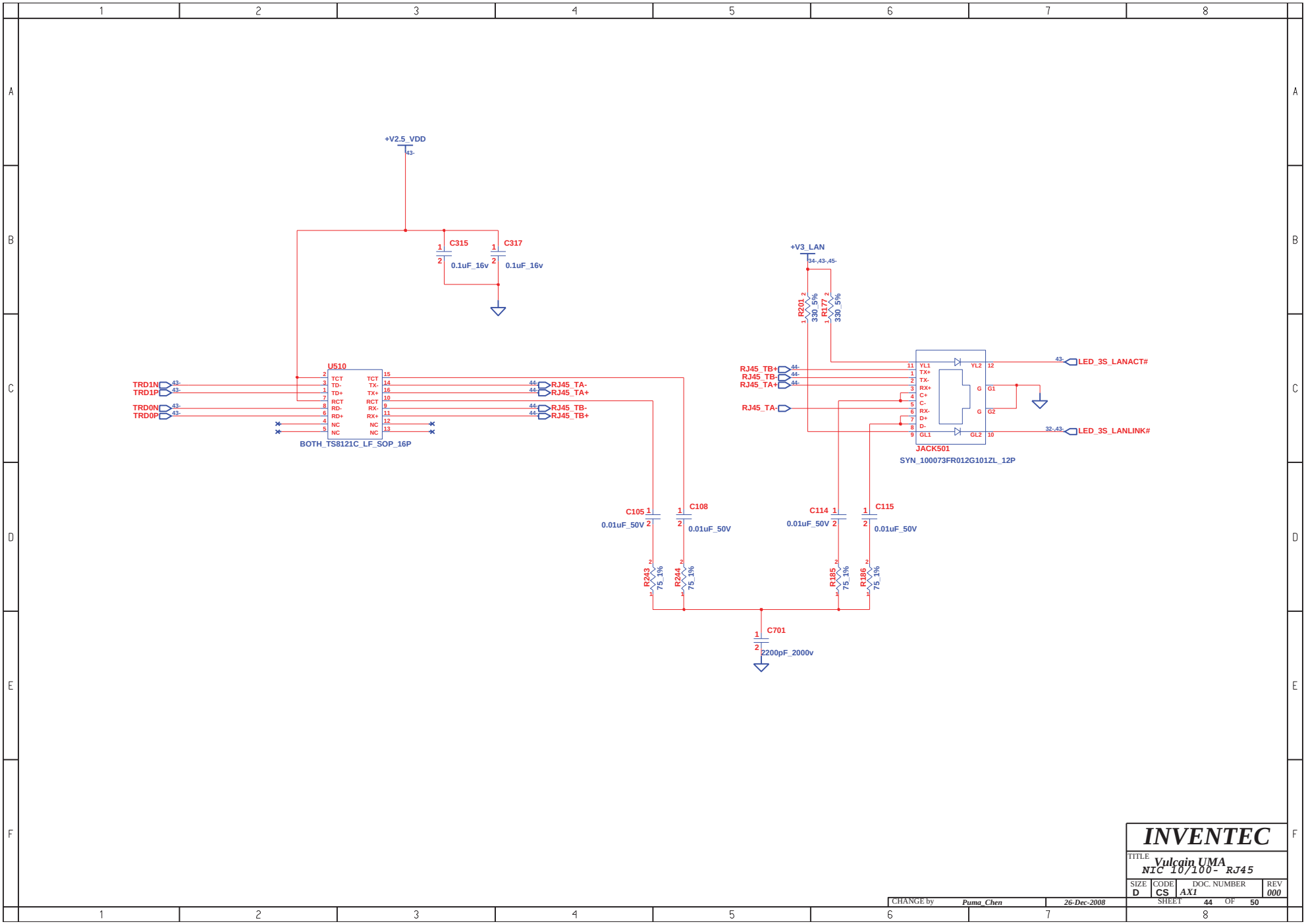

http://laptop-motherboard-schematic.blogspot.com/

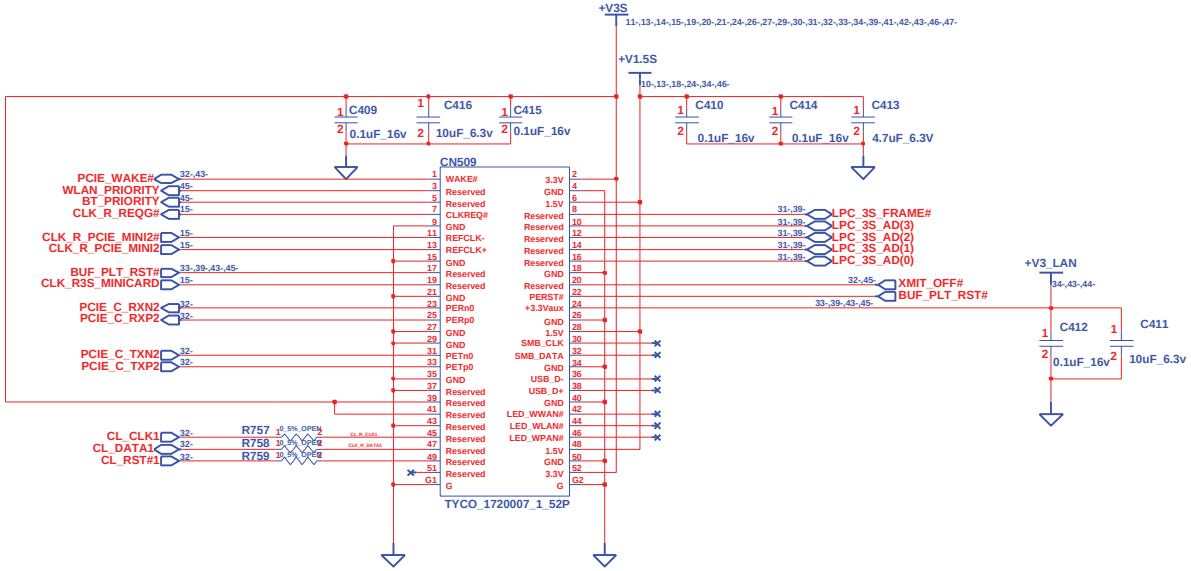

WLAN CNTR

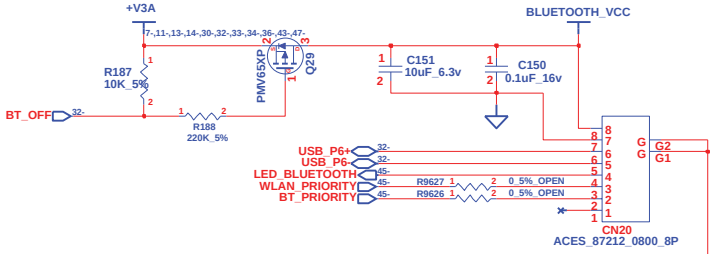

BLUETOOTH CNTR

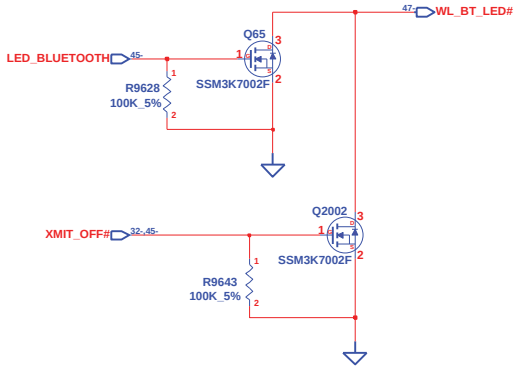

INVENTEC			
TITLE Vulcain UMA MINICARD & BT CONN			
SIZE D	CODE CS	DOC. NUMBER AX1	REV 000
CHANGE by Puma_Chen	26-Dec-2008	SHEET 45 OF 50	

http://laptop-motherboard-schematic.blogspot.com/

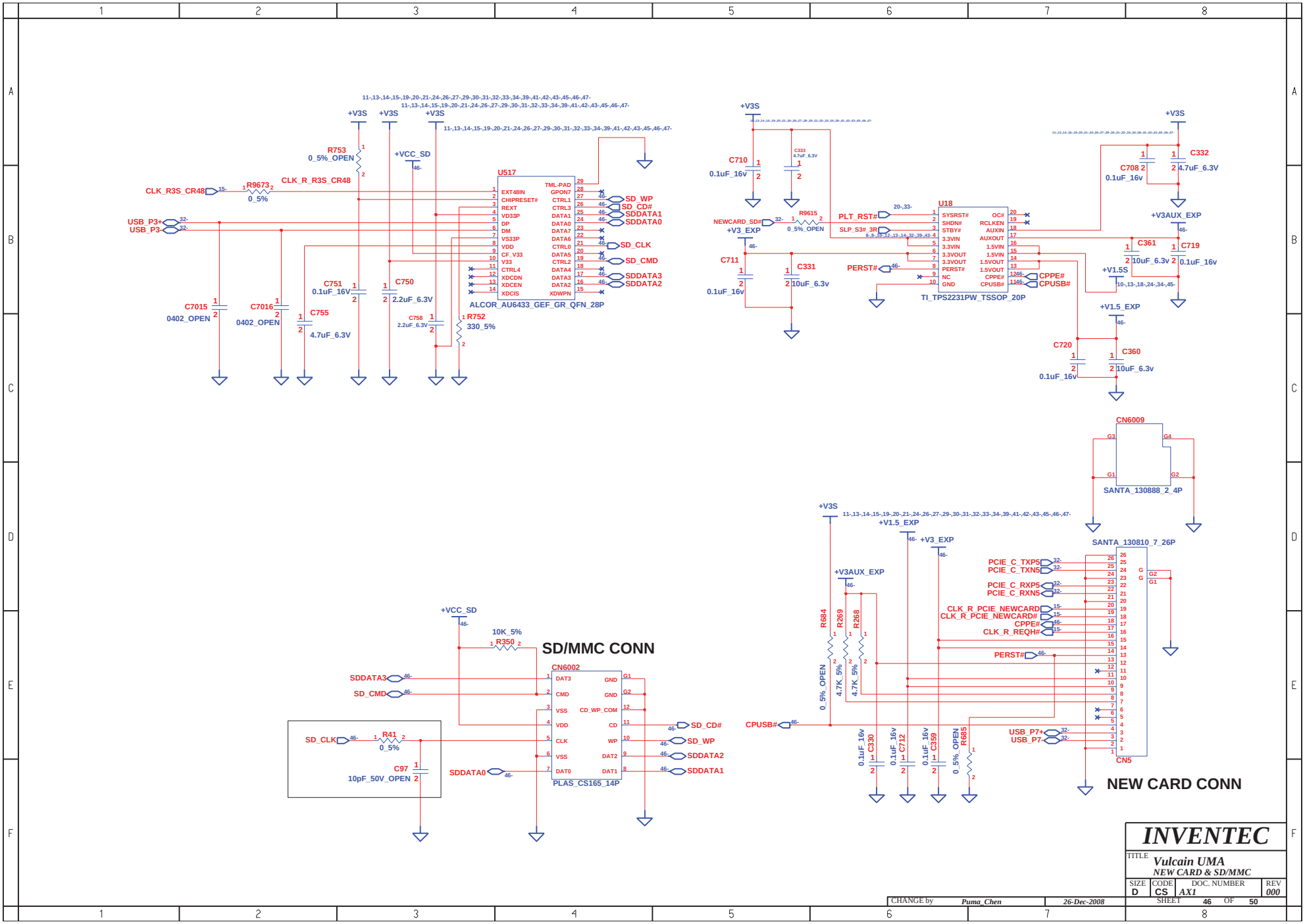

http://laptop-motherboard-schematic.blogspot.com/

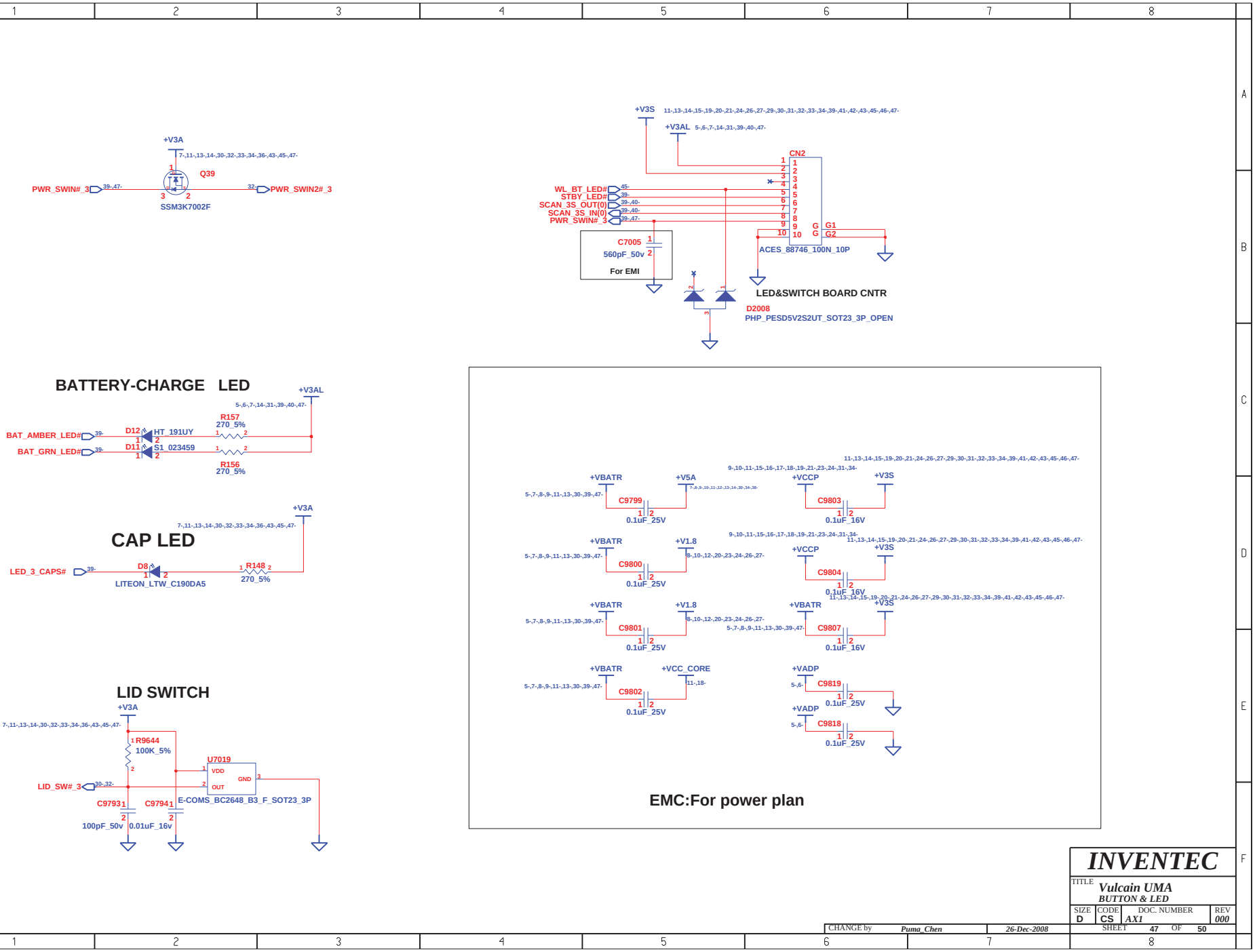

http://laptop-motherboard-schematic.blogspot.com/

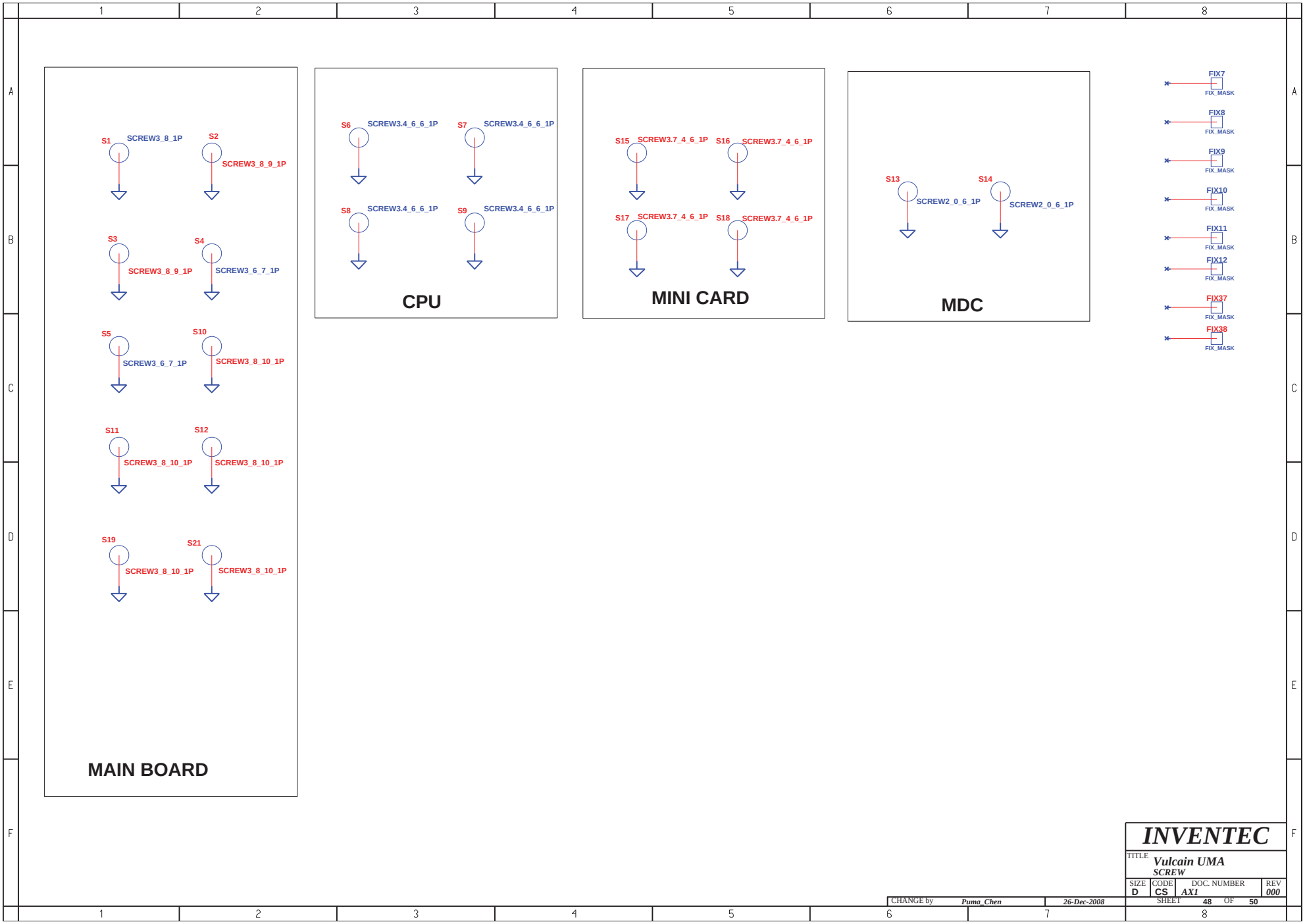

http://laptop-motherboard-schematic.blogspot.com/

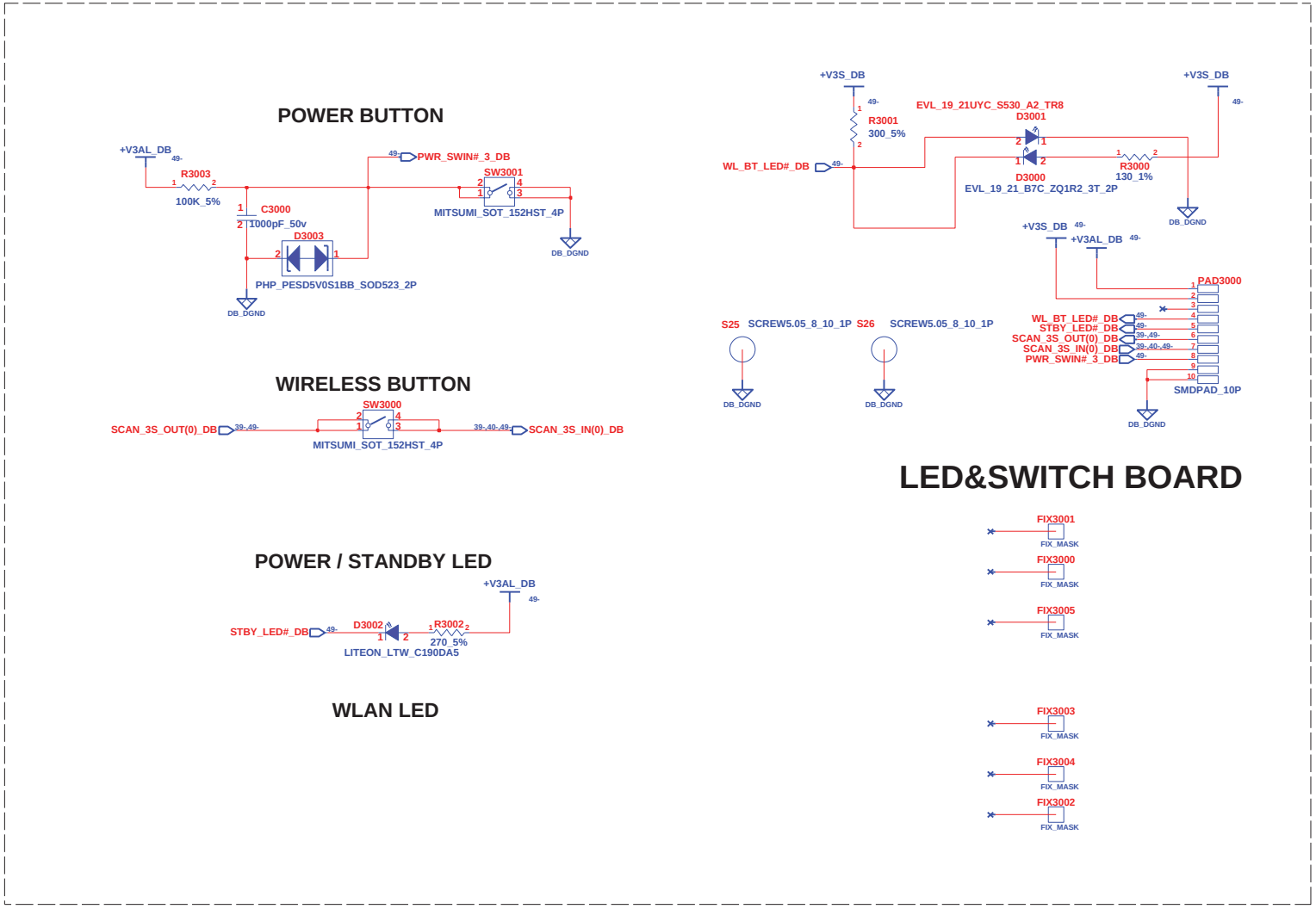

SWITCH DAUGHTER BOARD

INVENTEC			
TITLE: Vulcain UMA SWITCH Board			
SIZE: D	CODE: CS	DOC. NUMBER: AX1	REV: 000
CHANGE by: Puma_Chen	26-Dec-2008	SHEET 49 OF 50	

http://laptop-motherboard-schematic.blogspot.com/

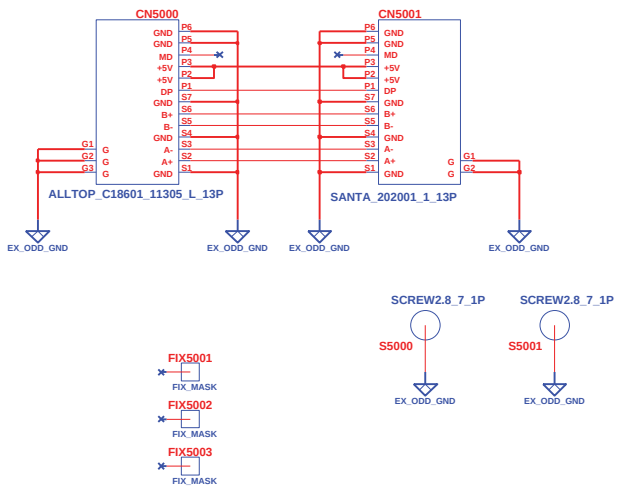

ODD EXTEND/B

INVENTEC			
TITLE Vulcain UMA 15.4"W ODD Extend Board			
SIZE D	CODE CS	DOC. NUMBER AX1	REV 000
CHANGE by Puma_Chen	26-Dec-2008	SHEET 50 OF 50	

http://laptop-motherboard-schematic.blogspot.com/