# EF4

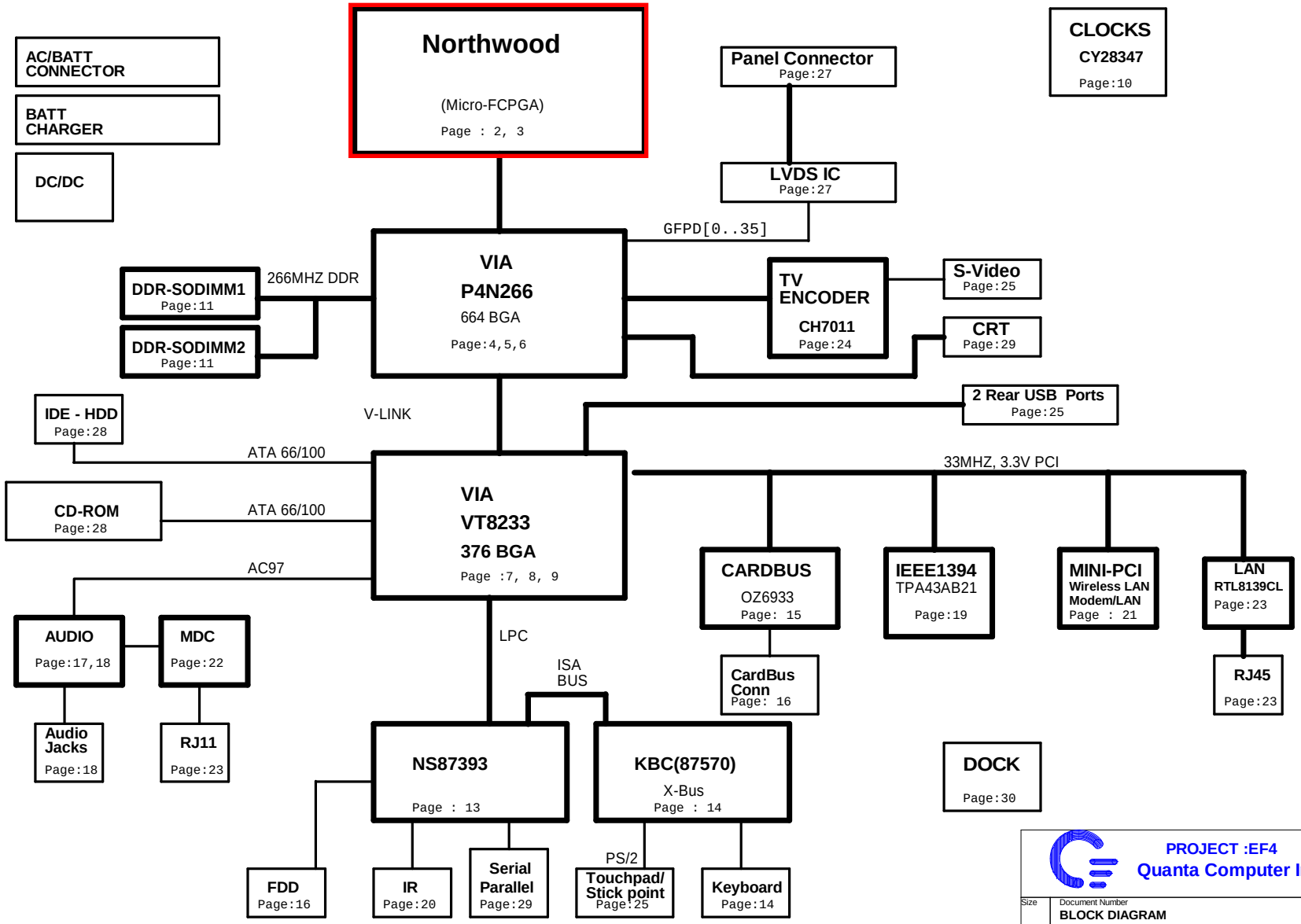


PROJECT :EF4
Quanta Computer Inc.

| Size | Document Number | Rev |
|---|---|---|
| | BLOCK DIAGRAM | 1A |

Date: Wednesday, January 07, 2004 Sheet 1 of 34

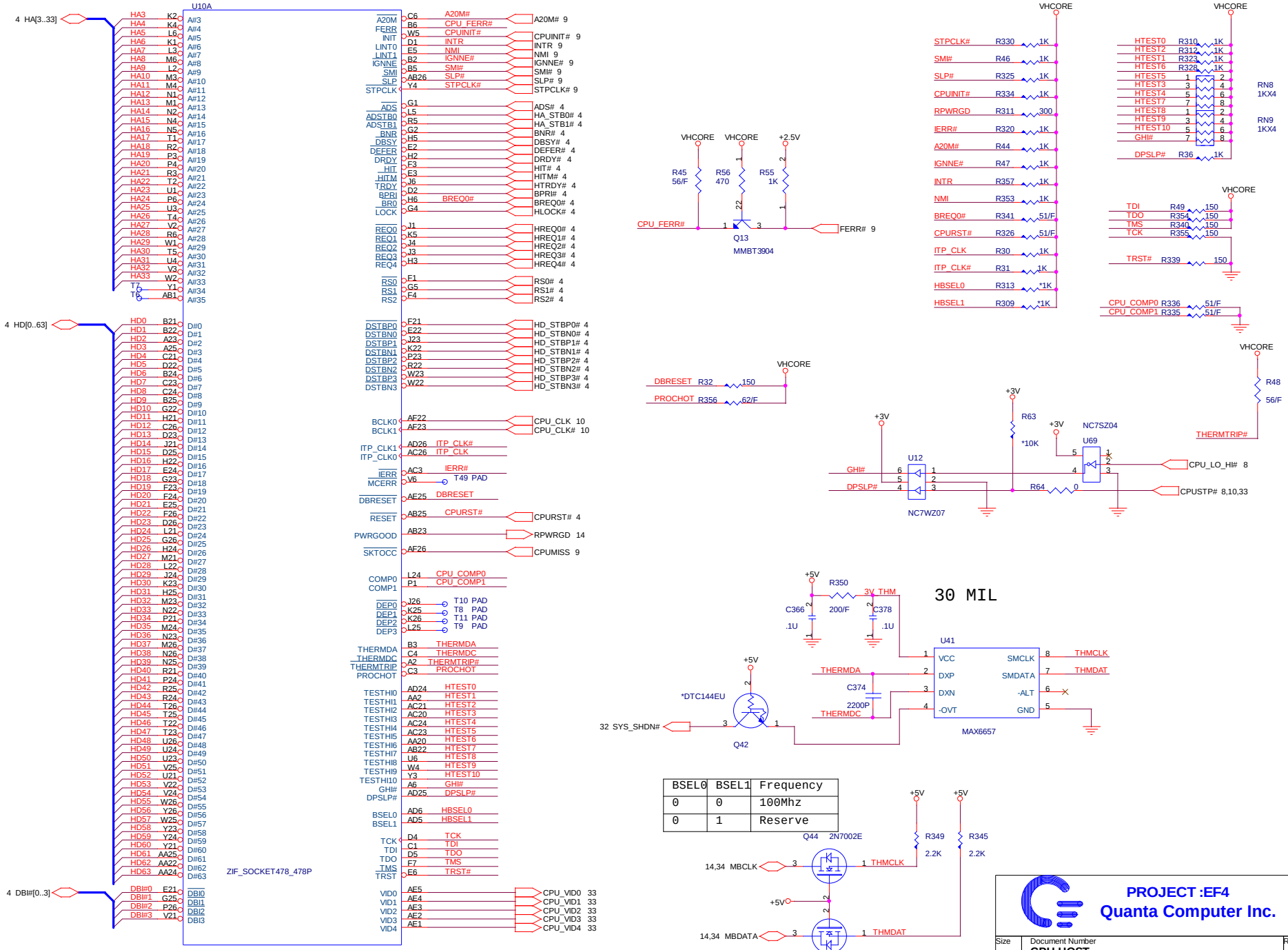


| BSEL0 | BSEL1 | Frequency |
|---|---|---|
| 0 | 0 | 100Mhz |
| 0 | 1 | Reserve |

**PROJECT :EF4**
**Quanta Computer Inc.**

| Size | Document Number | Rev |
|---|---|---|
| | **CPU HOST** | 1A |

Date: Wednesday, January 07, 2004 Sheet 2 of 34

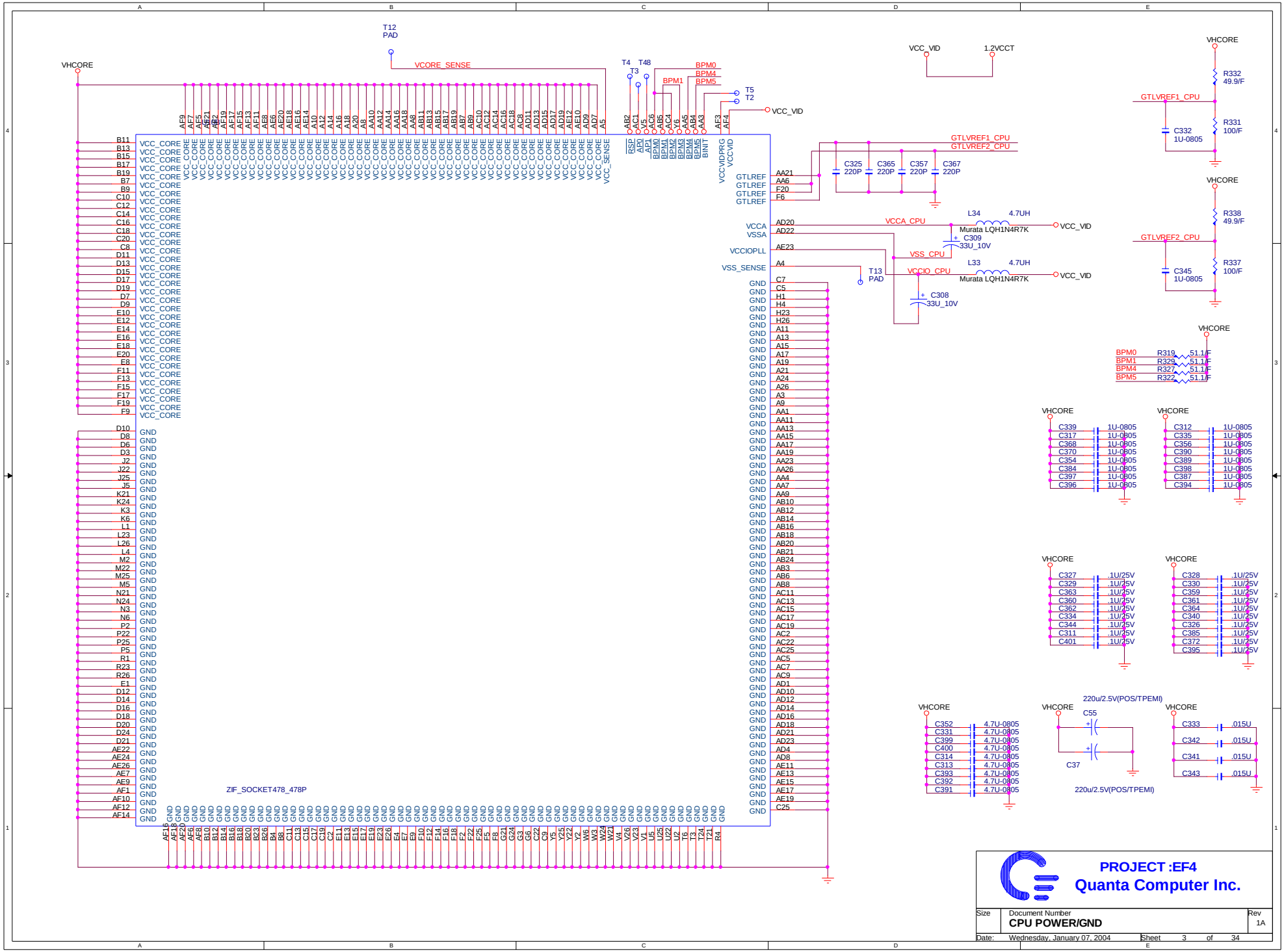
VHCORE
T12
PAD
VCORE_SENSE
T4
T48
T3
BPM0
BPM4
BPM5
BPM1
T5
T2
VCC_VID
VCC_VID
1.2VCCT
GTLVREF1_CPU
GTLVREF2_CPU
C325 220P
C365 220P
C357 220P
C367 220P
VCCA_CPU
L34 4.7UH
Murata LQH1N4R7K
C309 33U_10V
VSS_CPU
VCCIO_CPU
L33 4.7UH
Murata LQH1N4R7K
C308 33U_10V
T13
PAD
R332 49.9/F
R331 100/F
C332 1U-0805
R338 49.9/F
R337 100/F
C345 1U-0805
R319 51.1/F
R329 51.1/F
R327 51.1/F
R322 51.1/F
C339 1U-0805
C317 1U-0805
C368 1U-0805
C370 1U-0805
C354 1U-0805
C384 1U-0805
C397 1U-0805
C396 1U-0805
C312 1U-0805
C335 1U-0805
C356 1U-0805
C390 1U-0805
C389 1U-0805
C398 1U-0805
C387 1U-0805
C394 1U-0805
C327 .1U/25V
C329 .1U/25V
C363 .1U/25V
C360 .1U/25V
C362 .1U/25V
C334 .1U/25V
C344 .1U/25V
C311 .1U/25V
C401 .1U/25V
C328 .1U/25V
C330 .1U/25V
C359 .1U/25V
C361 .1U/25V
C364 .1U/25V
C340 .1U/25V
C326 .1U/25V
C385 .1U/25V
C372 .1U/25V
C395 .1U/25V
C352 4.7U-0805
C331 4.7U-0805
C399 4.7U-0805
C400 4.7U-0805
C314 4.7U-0805
C313 4.7U-0805
C393 4.7U-0805
C392 4.7U-0805
C391 4.7U-0805
220u/2.5V(POS/TPEMI)
C55
C37
220u/2.5V(POS/TPEMI)
C333 .015U
C342 .015U
C341 .015U
C343 .015U
ZIF_SOCKET478_478P
VCC_CORE
GND
VCCA
VSSA
VCCIOPLL
VSS_SENSE
GTLREF
VCCVIDPRG
VCCVID
RSP
BINIT
PROJECT :EF4
Quanta Computer Inc.
Size
Document Number
CPU POWER/GND
Rev
1A
Date: Wednesday, January 07, 2004
Sheet 3 of 34

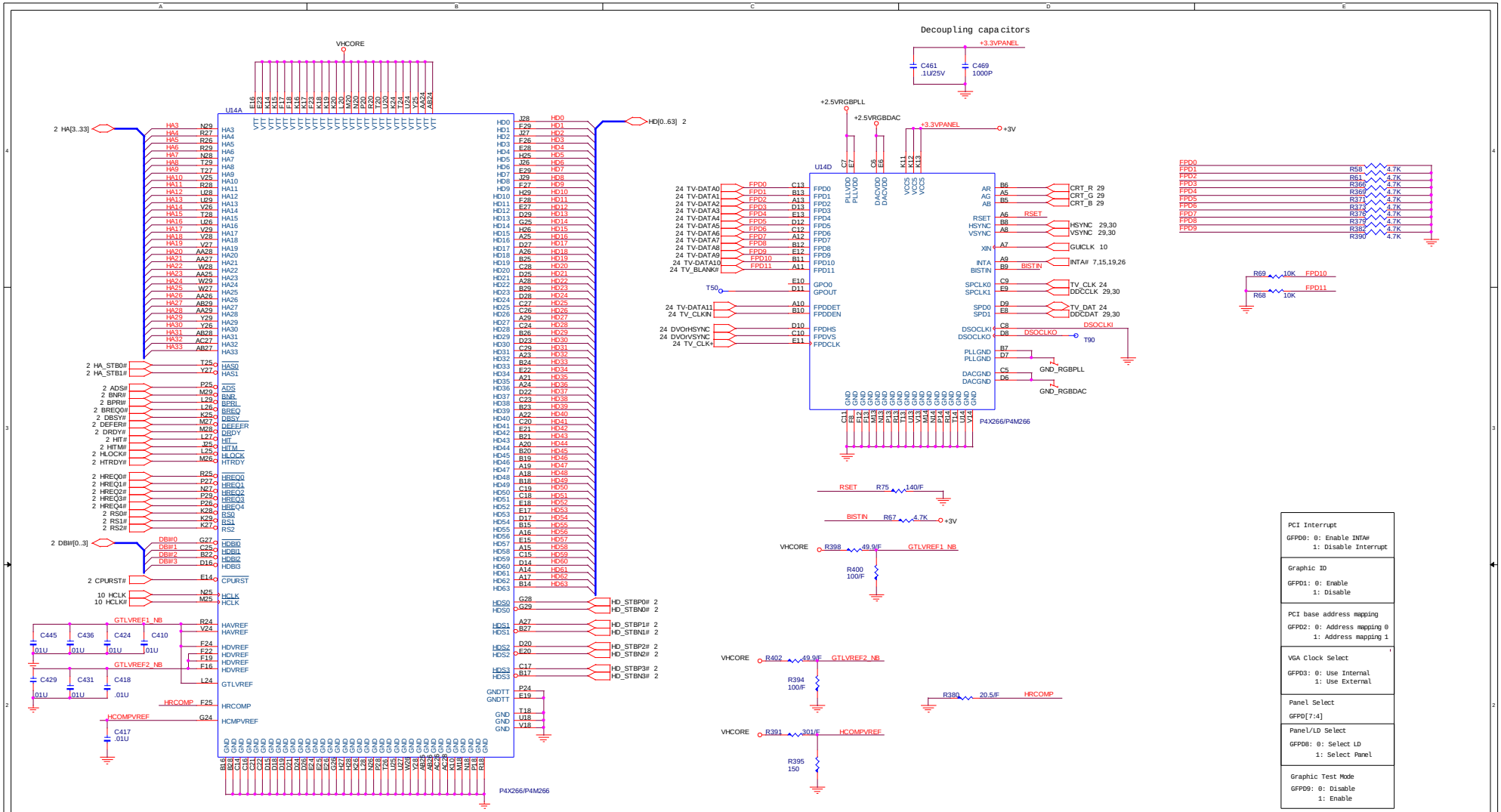
Decoupling capacitors
VHCORE
U14A
U14D
P4X266/P4M266
+3.3VPANEL
+2.5VRGBPLL
+2.5VRGBDAC
+3V
C461 .1U25V
C469 1000P
2 HA[3..33]
HD[0..63] 2
2 HA_STB0#
2 HA_STB1#
2 ADS#
2 BNR#
2 BPRI#
2 BREQ0#
2 DBSY#
2 DEFER#
2 DRDY#
2 HIT#
2 HITM#
2 HLOCK#
2 HTRDY#
2 HREQ0#
2 HREQ1#
2 HREQ2#
2 HREQ3#
2 HREQ4#
2 RS0#
2 RS1#
2 RS2#
2 DBI#[0..3]
2 CPURST#
10 HCLK
10 HCLK#
GTLVREF1_NB
GTLVREF2_NB
HCOMPVREF
HRCOMP
24 TV-DATA0
24 TV-DATA1
24 TV-DATA2
24 TV-DATA3
24 TV-DATA4
24 TV-DATA5
24 TV-DATA6
24 TV-DATA7
24 TV-DATA8
24 TV-DATA9
24 TV-DATA10
24 TV_BLANK#
24 TV-DATA11
24 TV_CLKIN
24 DVOrHSYNC
24 DVOrVSYNC
24 TV_CLK#
T50
CRT_R 29
CRT_G 29
CRT_B 29
HSYNC 29,30
VSYNC 29,30
GUICLK 10
INTA# 7,15,19,26
TV_CLK 24
DDCCLK 29,30
TV_DAT 24
DDCDAT 29,30
DSOCLKO
T90
GND_RGBPLL
GND_RGBDAC
RSET
BISTIN
R75 140/F
R67 4.7K
R398 49.9/F
R400 100/F
R402 49.9/F
R394 100/F
R391 301/F
R395 150
R380 20.5/F
R69 10K
R68 10K
FPD10
FPD11
PCI Interrupt
GFPD0: 0: Enable INTA#
1: Disable Interrupt
Graphic ID
GFPD1: 0: Enable
1: Disable
PCI base address mapping
GFPD2: 0: Address mapping 0
1: Address mapping 1
VGA Clock Select
GFPD3: 0: Use Internal
1: Use External
Panel Select
GFPD[7:4]
Panel/LD Select
GFPD8: 0: Select LD
1: Select Panel
Graphic Test Mode
GFPD9: 0: Disable
1: Enable
PROJECT :EF4
Quanta Computer Inc.
Size
Document Number
VIA P4N266 HBUS
Rev
1A
Date: Wednesday, January 07, 2004
Sheet 4 of 34

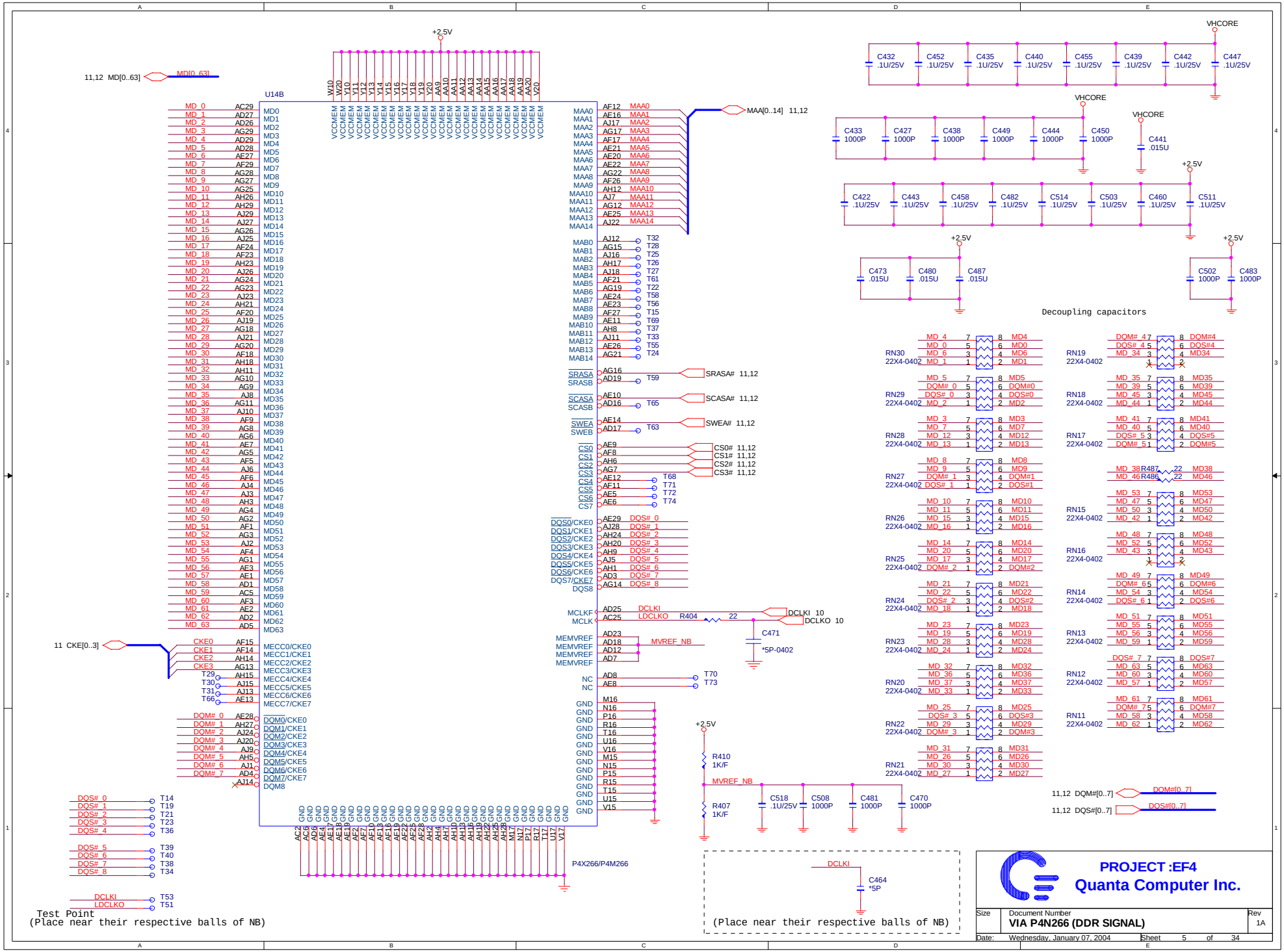
U14B
P4X266/P4M266
Decoupling capacitors
Test Point
(Place near their respective balls of NB)
(Place near their respective balls of NB)
PROJECT :EF4
Quanta Computer Inc.
Size
Document Number
VIA P4N266 (DDR SIGNAL)
Rev
1A
Date: Wednesday, January 07, 2004
Sheet 5 of 34

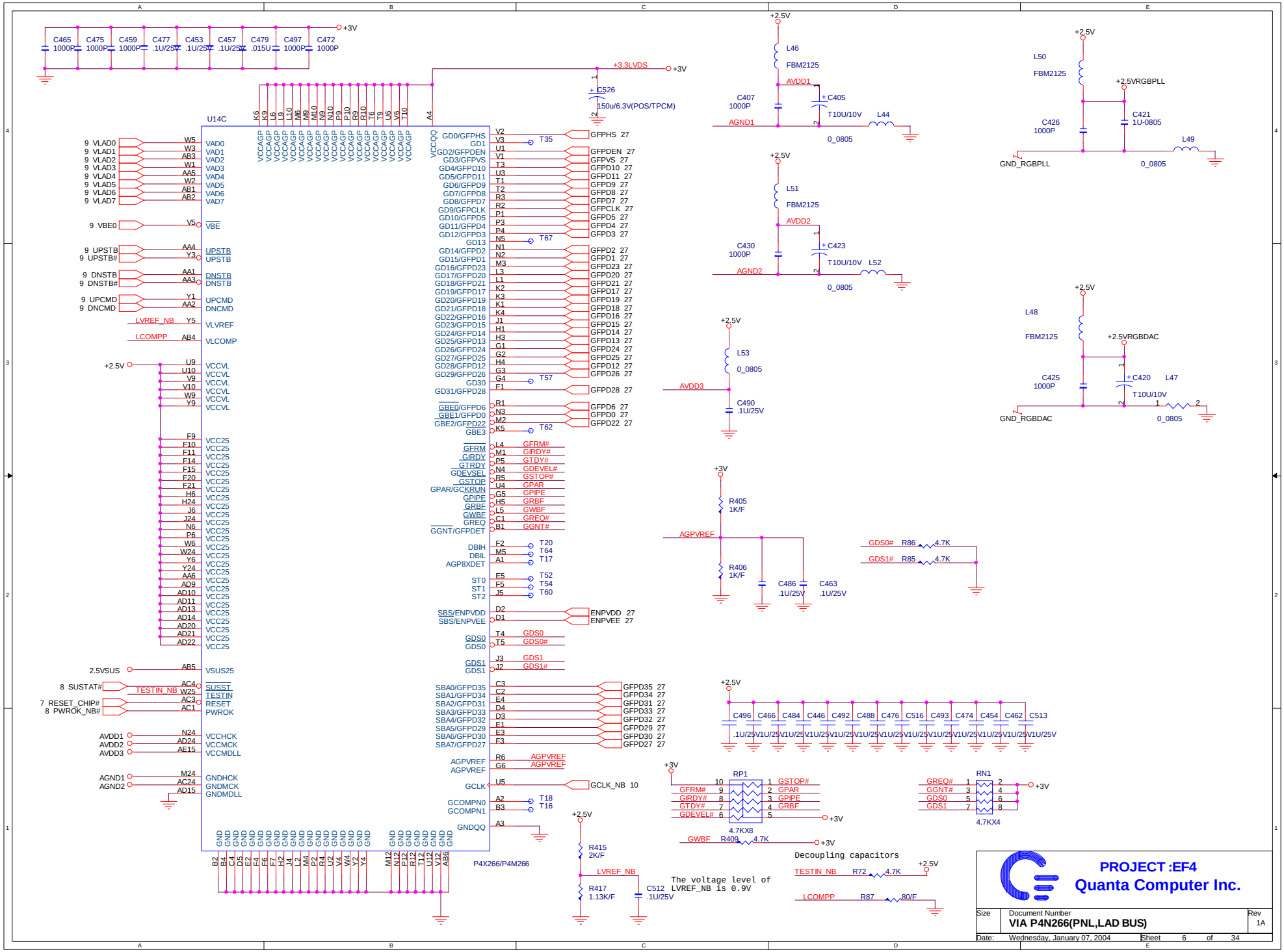
U14C
P4X266/P4M266
C465 1000P
C475 1000P
C459 1000P
C477 .1U/25V
C453 .1U/25V
C457 .1U/25V
C479 .015U
C497 1000P
C472 1000P
+3V
+3.3LVDS
C526 150u/6.3V(POS/TPCM)
L46 FBM2125
AVDD1
C407 1000P
C405 T10U/10V
L44 0_0805
AGND1
L50 FBM2125
+2.5VRGBPLL
C426 1000P
C421 1U-0805
L49 0_0805
GND_RGBPLL
L51 FBM2125
AVDD2
C430 1000P
C423 T10U/10V
L52 0_0805
AGND2
L48 FBM2125
+2.5VRGBDAC
C425 1000P
C420 T10U/10V
L47 0_0805
GND_RGBDAC
L53 0_0805
AVDD3
C490 .1U/25V
R405 1K/F
R406 1K/F
AGPVREF
C486 .1U/25V
C463 .1U/25V
GDS0# R86 4.7K
GDS1# R85 4.7K
C496 C466 C484 C446 C492 C488 C476 C516 C493 C474 C454 C462 C513
.1U/25V
RP1
GFRM# GIRDY# GTDY# GDEVEL#
GSTOP# GPAR GPIPE GRBF
4.7KX8
GWBF R409 4.7K
RN1
GREQ# GGNT# GDS0 GDS1
4.7KX4
R415 2K/F
R417 1.13K/F
C512 .1U/25V
LVREF_NB
The voltage level of LVREF_NB is 0.9V
Decoupling capacitors
TESTIN_NB R72 4.7K
LCOMPP R87 80/F
PROJECT :EF4
Quanta Computer Inc.
Size
Document Number
VIA P4N266(PNL,LAD BUS)
Rev 1A
Date: Wednesday, January 07, 2004
Sheet 6 of 34

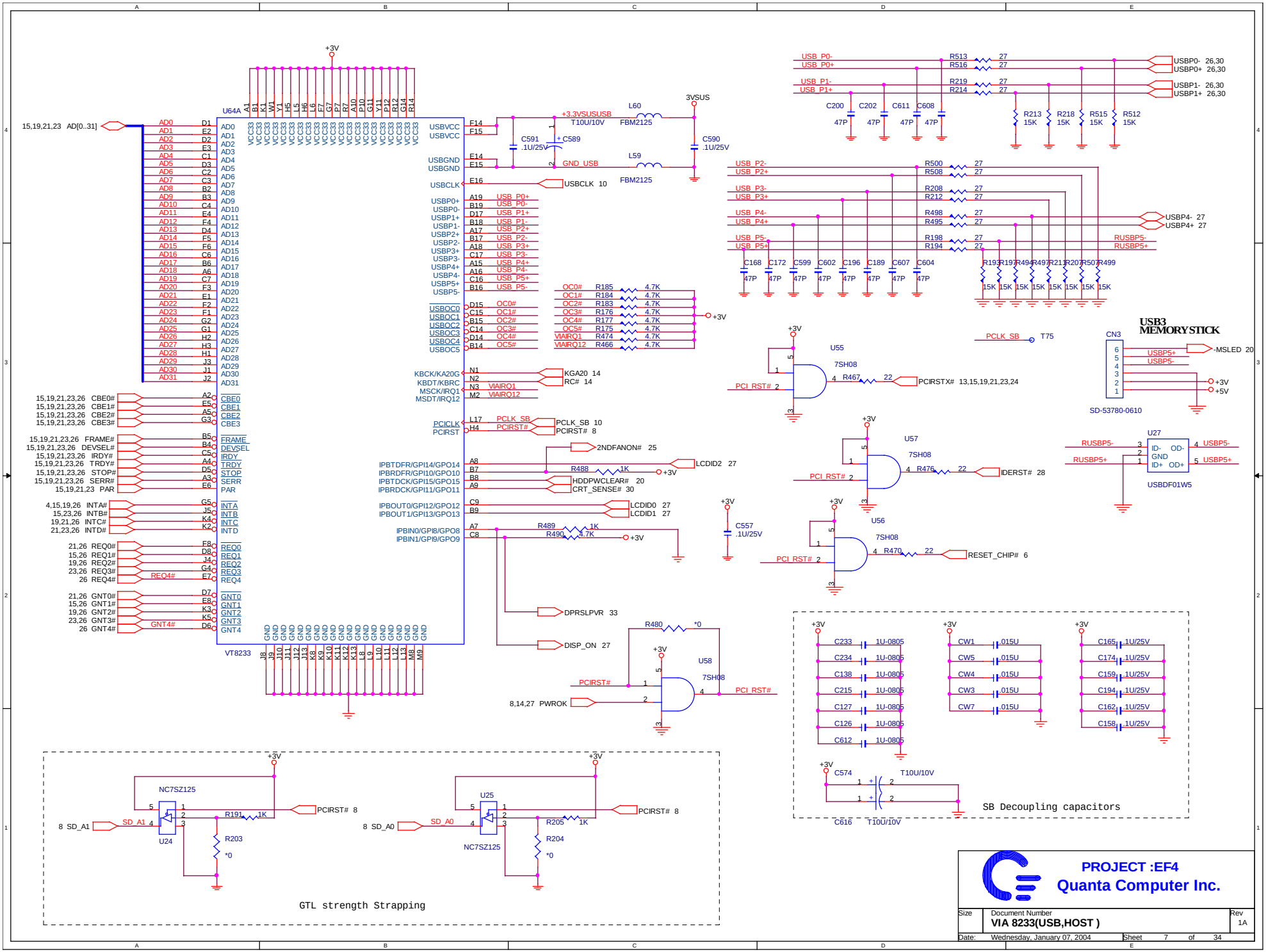
U64A
VT8233
15,19,21,23 AD[0..31]
USB3 MEMORY STICK
CN3
SD-53780-0610
USBDF01W5
U55
U57
U56
U58
U24
U25
NC7SZ125
7SH08
PCIRSTX# 13,15,19,21,23,24
IDERST# 28
RESET_CHIP# 6
PCIRST# 8
8,14,27 PWROK
DISP_ON 27
DPRSLPVR 33
2NDFANON# 25
LCDID2 27
LCDID0 27
LCDID1 27
USBCLK 10
KGA20 14
RC# 14
PCLK_SB 10
PCIRST# 8
HDDPWCLEAR# 20
CRT_SENSE# 30
-MSLED 20
USBP0- 26,30
USBP0+ 26,30
USBP1- 26,30
USBP1+ 26,30
USBP4- 27
USBP4+ 27
RUSBP5-
RUSBP5+
GTL strength Strapping
SB Decoupling capacitors
PROJECT :EF4
Quanta Computer Inc.
Document Number
VIA 8233(USB,HOST )
Rev 1A
Date: Wednesday, January 07, 2004
Sheet 7 of 34

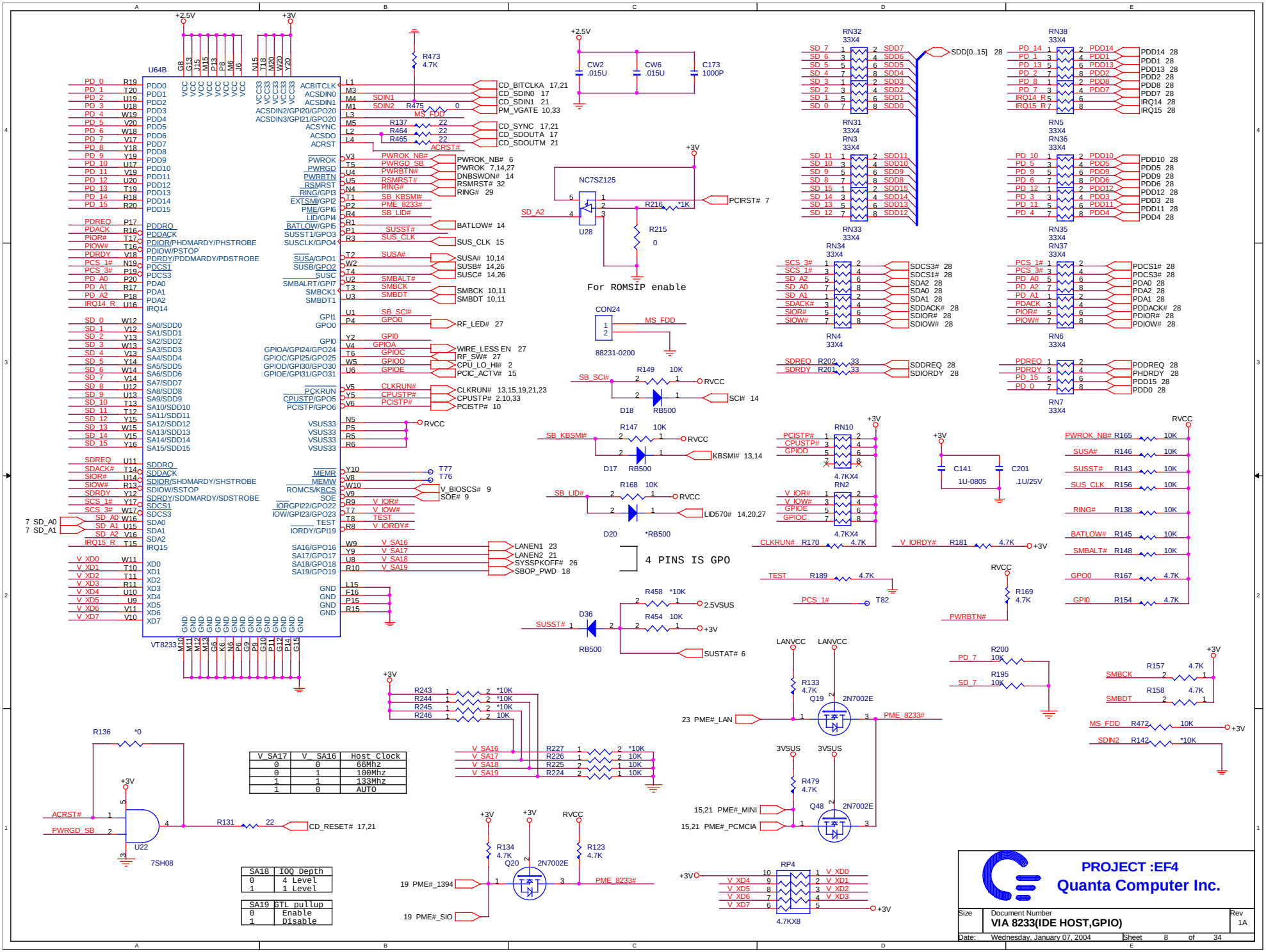


| V_SA17 | V_SA16 | Host Clock |
|---|---|---|
| 0 | 0 | 66Mhz |
| 0 | 1 | 100Mhz |
| 1 | 1 | 133Mhz |
| 1 | 0 | AUTO |

| SA18 | IOQ Depth |
|---|---|
| 0 | 4 Level |
| 1 | 1 Level |

| SA19 | GTL pullup |
|---|---|
| 0 | Enable |
| 1 | Disable |

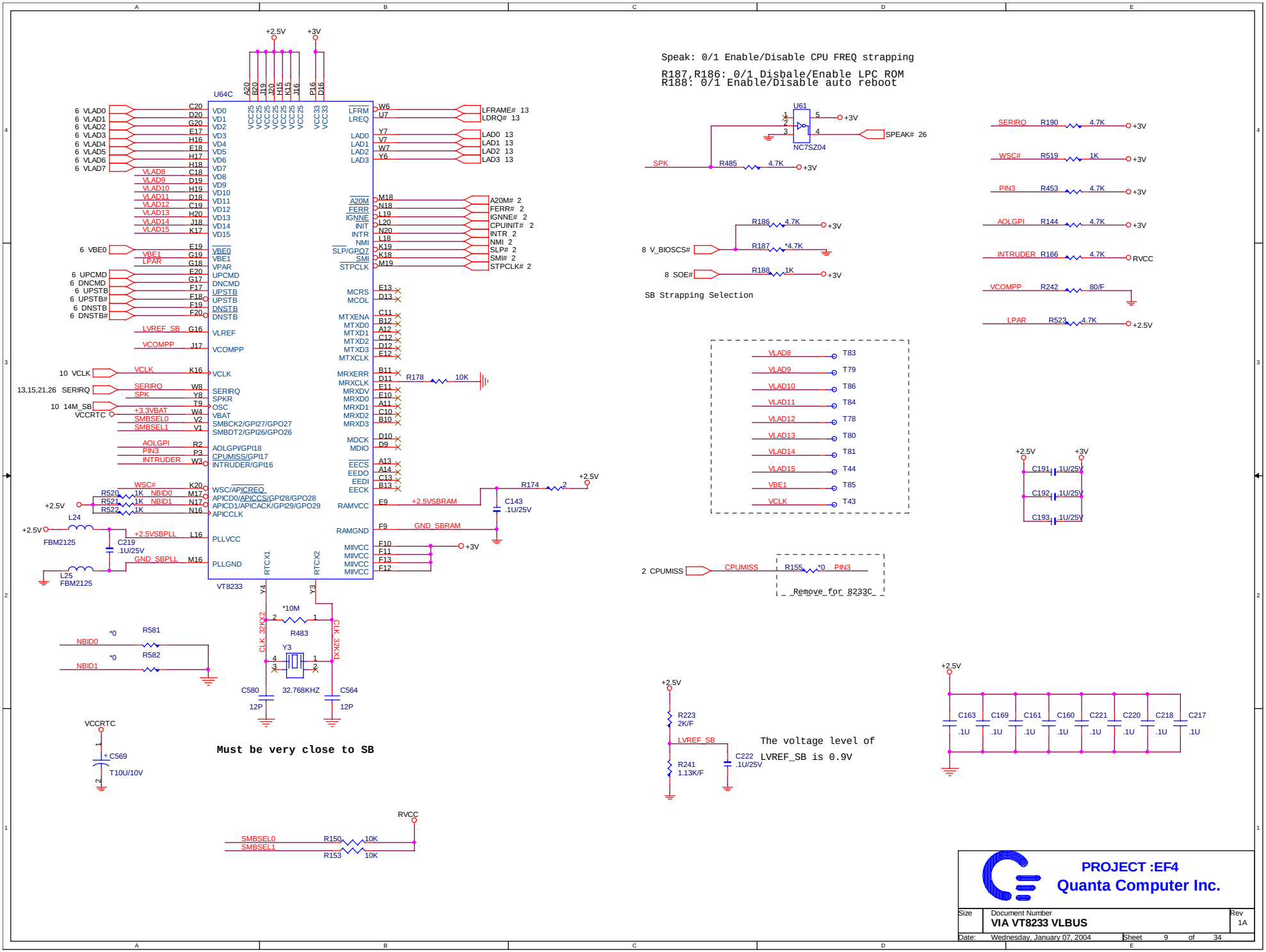
Speak: 0/1 Enable/Disable CPU FREQ strapping
R187,R186: 0/1 Disbale/Enable LPC ROM
R188: 0/1 Enable/Disable auto reboot
U64C
VT8233
U61
NC7SZ04
SB Strapping Selection
Must be very close to SB
The voltage level of LVREF_SB is 0.9V
Remove_for_8233C
PROJECT :EF4
Quanta Computer Inc.
Document Number
VIA VT8233 VLBUS
Rev
1A
Date: Wednesday, January 07, 2004
Sheet 9 of 34

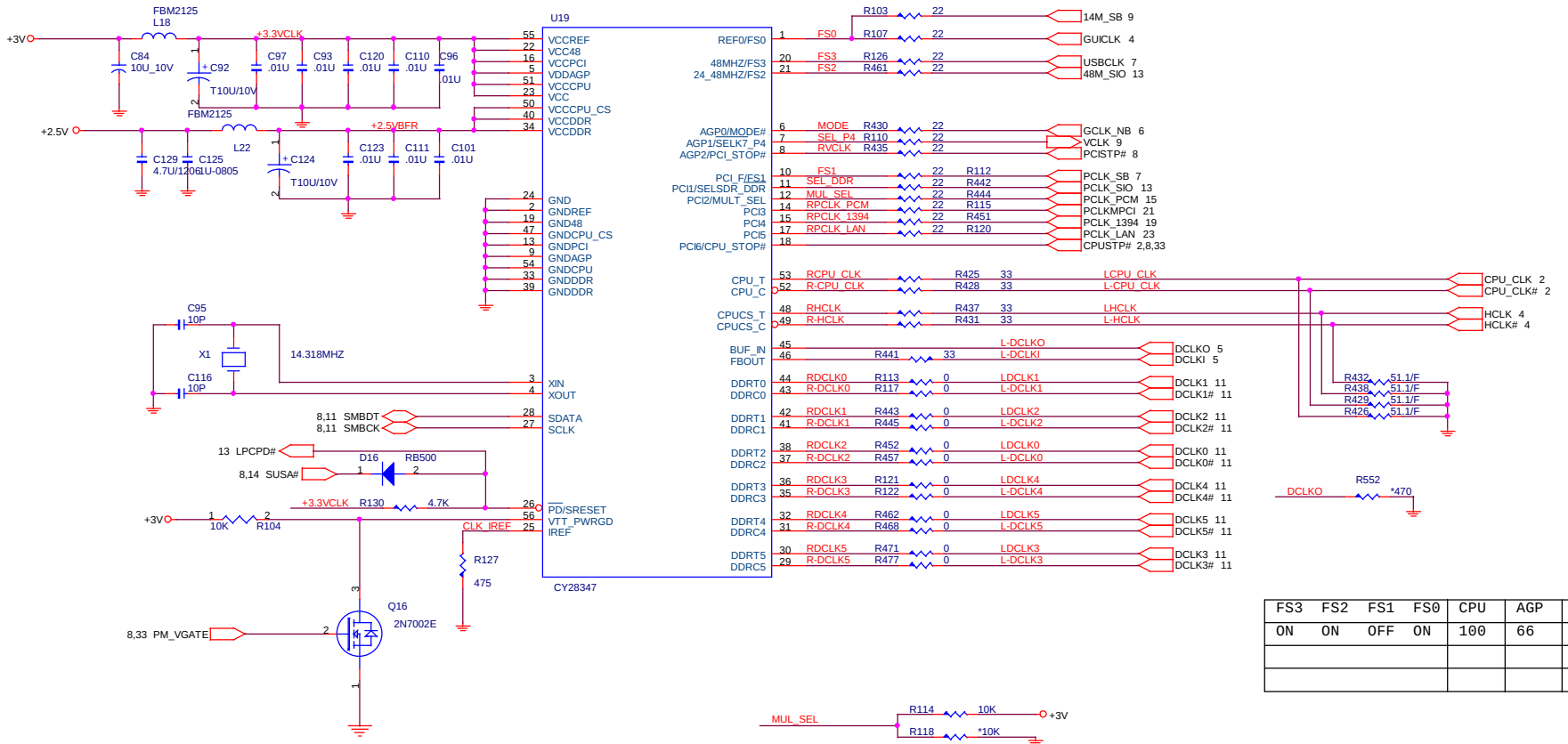


| FS3 | FS2 | FS1 | FS0 | CPU | AGP | PCI |
|---|---|---|---|---|---|---|
| ON | ON | OFF | ON | 100 | 66 | 33 |
| | | | | | | |
| | | | | | | |

**PROJECT :EF4**

**Quanta Computer Inc.**

| Size | Document Number | Rev |
|---|---|---|
| | **CLOCK (CY82347)** | 1A |

Date: Wednesday, January 07, 2004 Sheet 10 of 34

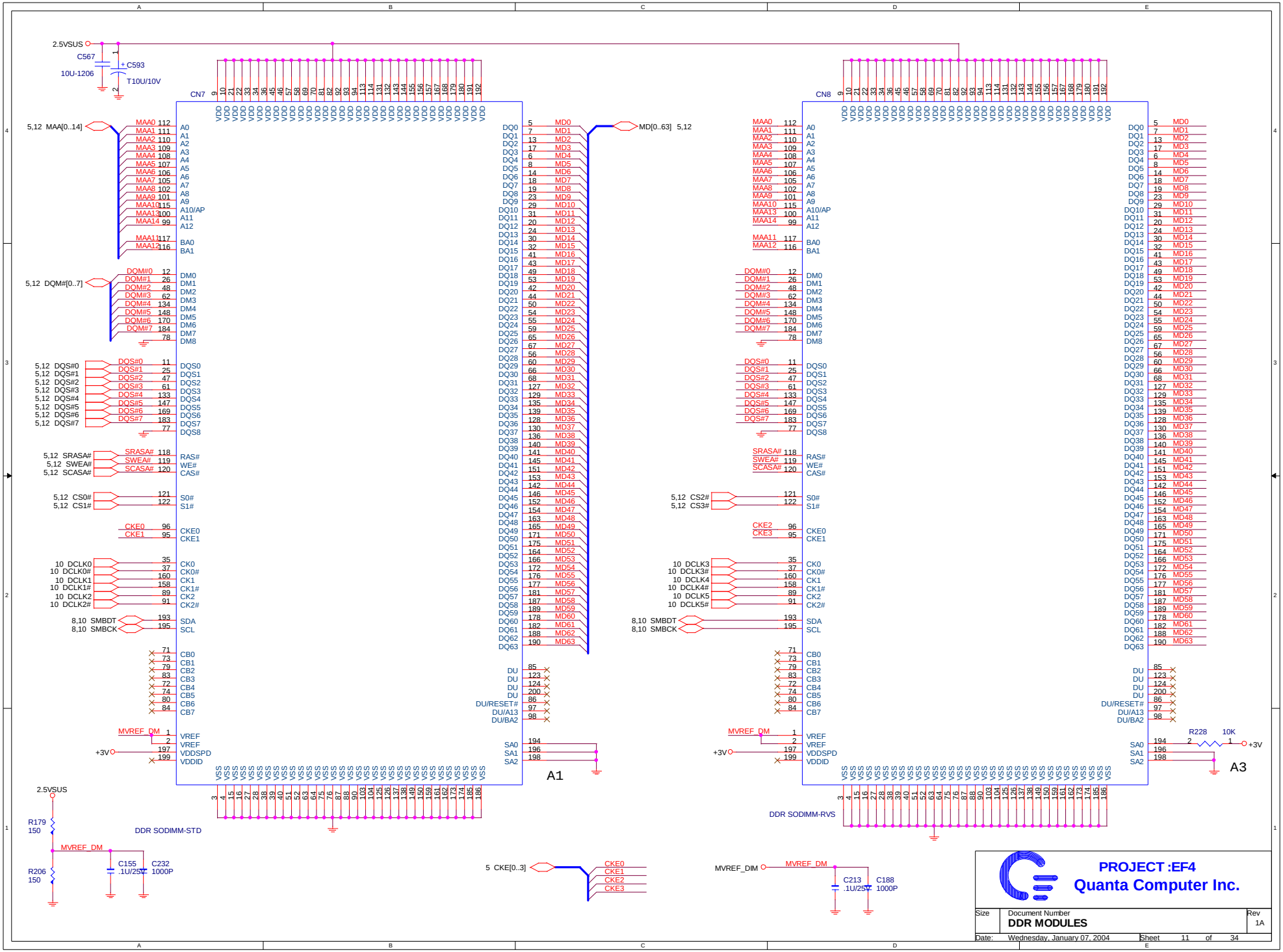
2.5VSUS
C567
10U-1206
C593
T10U/10V
CN7
CN8
5,12 MAA[0..14]
5,12 DQM#[0..7]
5,12 DQS#0
5,12 DQS#1
5,12 DQS#2
5,12 DQS#3
5,12 DQS#4
5,12 DQS#5
5,12 DQS#6
5,12 DQS#7
5,12 SRASA#
5,12 SWEA#
5,12 SCASA#
5,12 CS0#
5,12 CS1#
5,12 CS2#
5,12 CS3#
10 DCLK0
10 DCLK0#
10 DCLK1
10 DCLK1#
10 DCLK2
10 DCLK2#
10 DCLK3
10 DCLK4
10 DCLK4#
10 DCLK5
10 DCLK5#
8,10 SMBDT
8,10 SMBCK
MD[0..63] 5,12
MVREF_DM
+3V
R228
10K
A1
A3
DDR SODIMM-STD
DDR SODIMM-RVS
R179
150
R206
150
C155
.1U/25V
C232
1000P
5 CKE[0..3]
CKE0
CKE1
CKE2
CKE3
MVREF_DIM
C213
.1U/25V
C188
1000P
PROJECT :EF4
Quanta Computer Inc.
Size
Document Number
DDR MODULES
Rev
1A
Date: Wednesday, January 07, 2004
Sheet 11 of 34

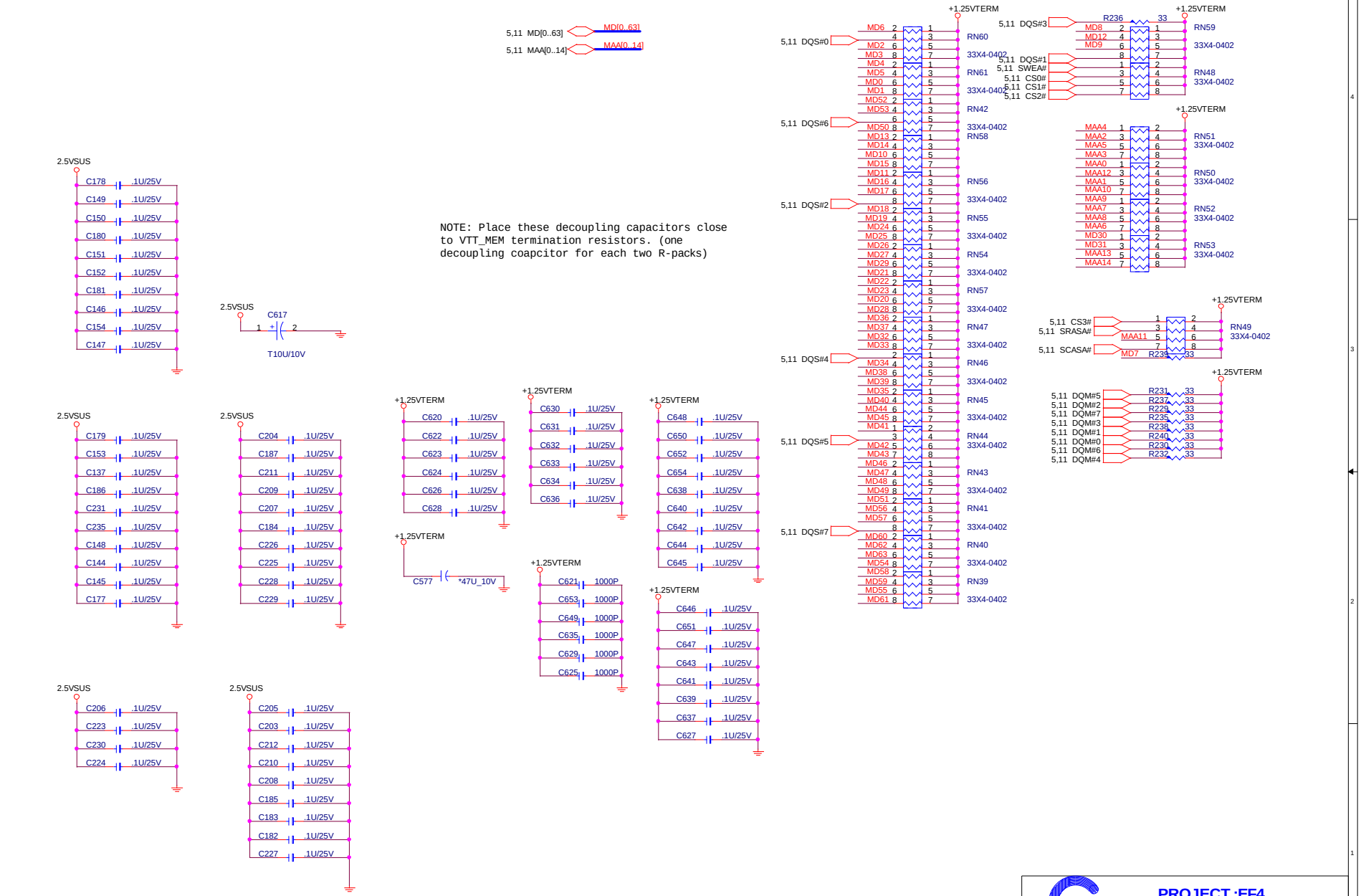


PROJECT :EF4

Quanta Computer Inc.

| Size | Document Number | Rev |
|---|---|---|
| | DDR TERMINATOR | 1A |

Date: Wednesday, January 07, 2004 Sheet 12 of 34

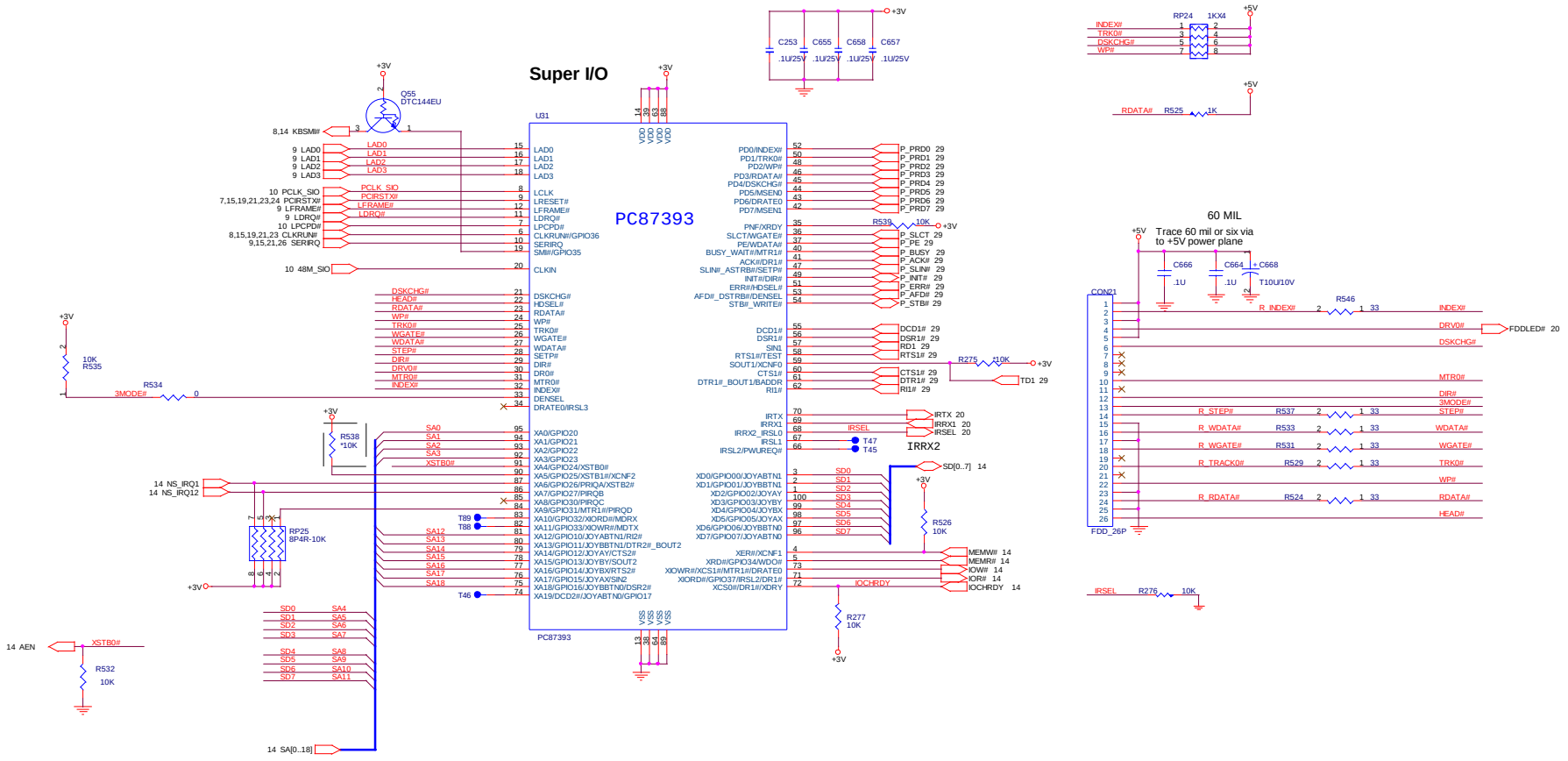
Super I/O
PC87393
U31
Q55
DTC144EU
C253 .1U/25V
C655 .1U/25V
C658 .1U/25V
C657 .1U/25V
RP24 1KX4
RDATA# R525 1K
60 MIL
Trace 60 mil or six via to +5V power plane
C666 .1U
C664 .1U
C668 T10U/10V
CON21
FDD_26P
R546
R_INDEX#
R_STEP# R537
R_WDATA# R533
R_WGATE# R531
R_TRACK0# R529
R_RDATA# R524
IRSEL R276 10K
R539 10K
R275 10K
R534 0
R535 10K
R538 10K
RP25 8P4R-10K
R532 10K
R526 10K
R277 10K
IRRX2
XSTB0#
14 AEN
14 SA[0..18]
14 SD[0..7]
14 NS_IRQ1
14 NS_IRQ12
8,14 KBSMI#
10 48M_SIO
PROJECT :EF4
Quanta Computer Inc.
Size
Document Number
LPC(LPC47N227,FDD)
Rev
1A
Date: Wednesday, January 07, 2004
Sheet 13 of 34

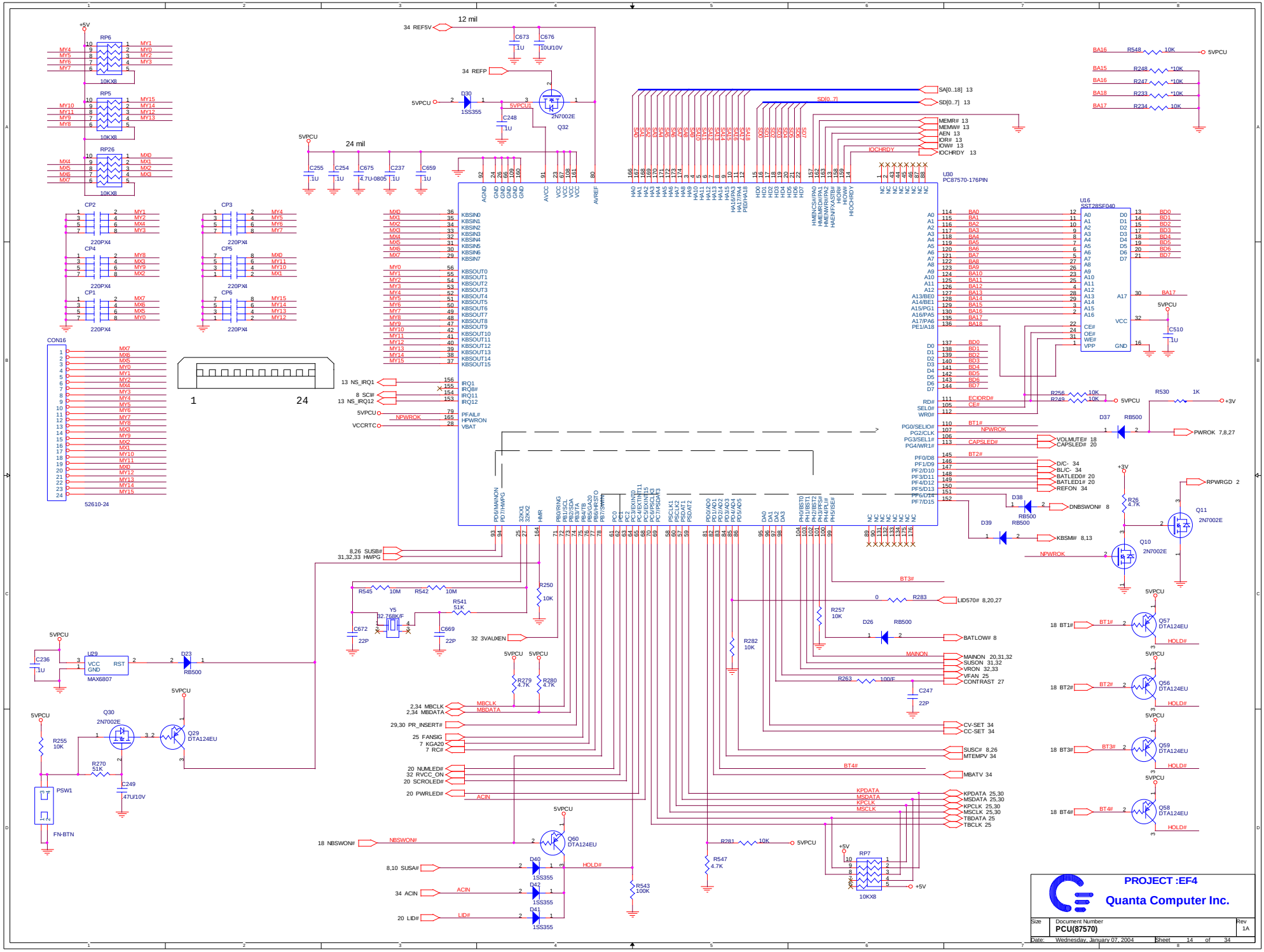
PROJECT :EF4
Quanta Computer Inc.
Size
Document Number
PCU(87570)
Rev
1A
Date: Wednesday, January 07, 2004
Sheet 14 of 34
U30
PC87570-176PIN
U16
SST28SF040
CON16
52610-24
U29
MAX6807
Q32
2N7002E
Q11
2N7002E
Q10
2N7002E
Q30
2N7002E
Q29
DTA124EU
Q60
DTA124EU
Q57
DTA124EU
Q56
DTA124EU
Q59
DTA124EU
Q58
DTA124EU
PSW1
FN-BTN
Y5
32.768K/F
RP6
RP5
RP26
RP7
10KX8
CP1
CP2
CP3
CP4
CP5
CP6
220PX4
12 mil
24 mil
34 REF5V
34 REFP
5VPCU
+5V
+3V
PWROK 7,8,27
RPWRGD 2
MAINON 20,31,32
SUSON 31,32
VRON 32,33
VFAN 25
CONTRAST 27
CV-SET 34
CC-SET 34
SUSC# 8,26
MTEMPV 34
MBATV 34
KPDATA 25,30
MSDATA 25,30
KPCLK 25,30
MSCLK 25,30
TBDATA 25
TBCLK 25
BATLOW# 8
LID570# 8,20,27
DNBSWON# 8
KBSMI# 8,13
VOLMUTE# 18
CAPSLED# 20
BATLED0# 20
BATLED1# 20
REFON 34
D/C- 34
BL/C- 34
SA[0..18] 13
SD[0..7] 13
MEMR# 13
MEMW# 13
AEN 13
IOR# 13
IOW# 13
IOCHRDY 13
NS_IRQ1
SC#
NS_IRQ12
NPWROK
VCCRTC
8,26 SUSB#
31,32,33 HWPG
2,34 MBCLK
2,34 MBDATA
29,30 PR_INSERT#
25 FANSIG
7 KGA20
7 RC#
20 NUMLED#
32 RVCC_ON
20 SCROLED#
20 PWRLED#
32 3VAUXEN
18 NBSWON#
8,10 SUSA#
34 ACIN
20 LID#
18 BT1#
18 BT2#
18 BT3#
18 BT4#

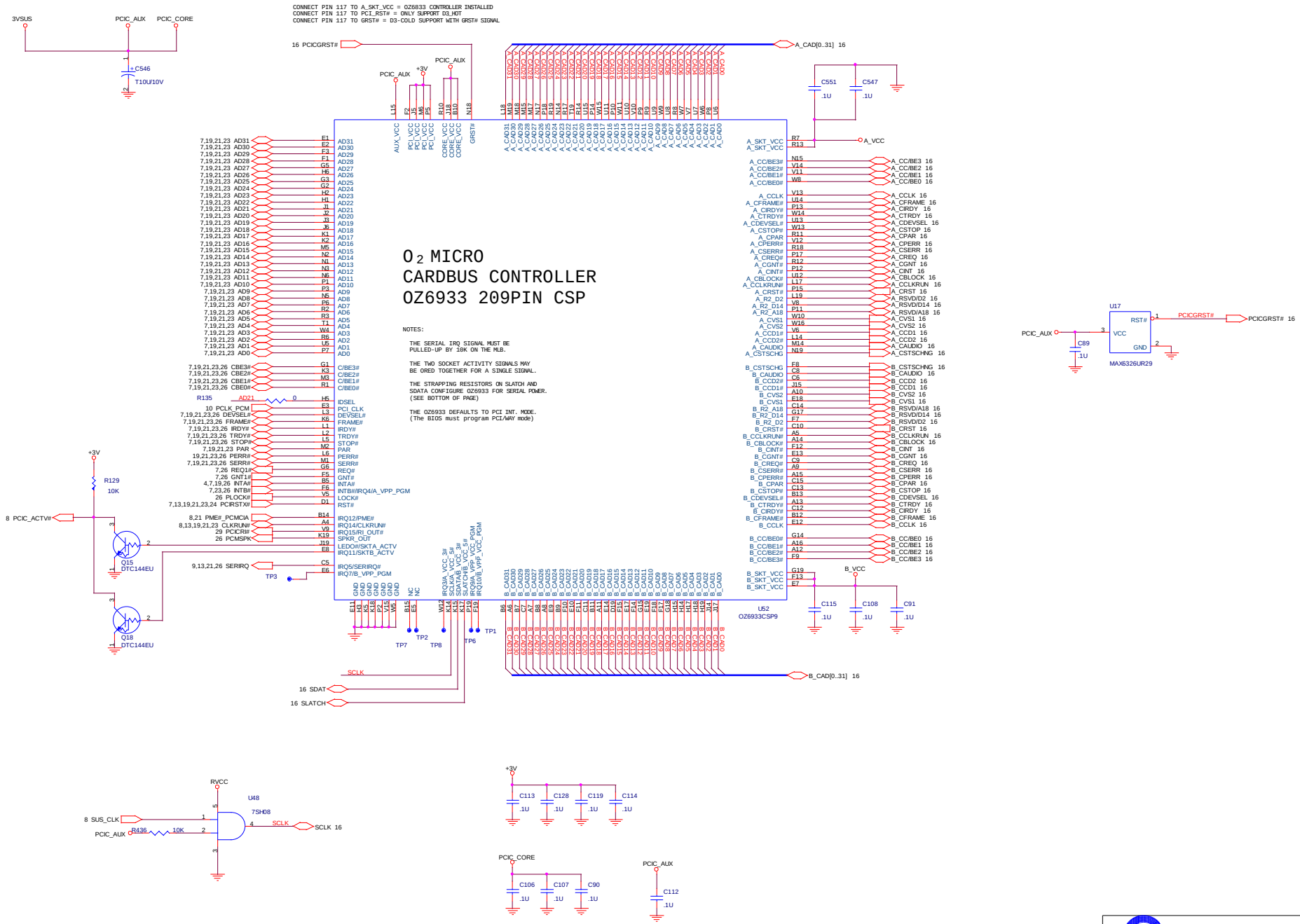
CONNECT PIN 117 TO A_SKT_VCC = OZ6933 CONTROLLER INSTALLED
CONNECT PIN 117 TO PCI_RST# = ONLY SUPPORT D3_HOT
CONNECT PIN 117 TO GRST# = D3-COLD SUPPORT WITH GRST# SIGNAL
O2 MICRO
CARDBUS CONTROLLER
OZ6933 209PIN CSP
NOTES:
THE SERIAL IRQ SIGNAL MUST BE PULLED-UP BY 10K ON THE MLB.
THE TWO SOCKET ACTIVITY SIGNALS MAY BE ORED TOGETHER FOR A SINGLE SIGNAL.
THE STRAPPING RESISTORS ON SLATCH AND SDATA CONFIGURE OZ6933 FOR SERIAL POWER. (SEE BOTTOM OF PAGE)
THE OZ6933 DEFAULTS TO PCI INT. MODE. (The BIOS must program PCI/WAY mode)
U52
OZ6933CSP9
U17
MAX6326UR29
U48
7SH08
PROJECT :EF4
Quanta Computer Inc.
Size
Document Number
OZ6933
Rev
1A
Date: Wednesday, January 07, 2004
Sheet 15 of 34

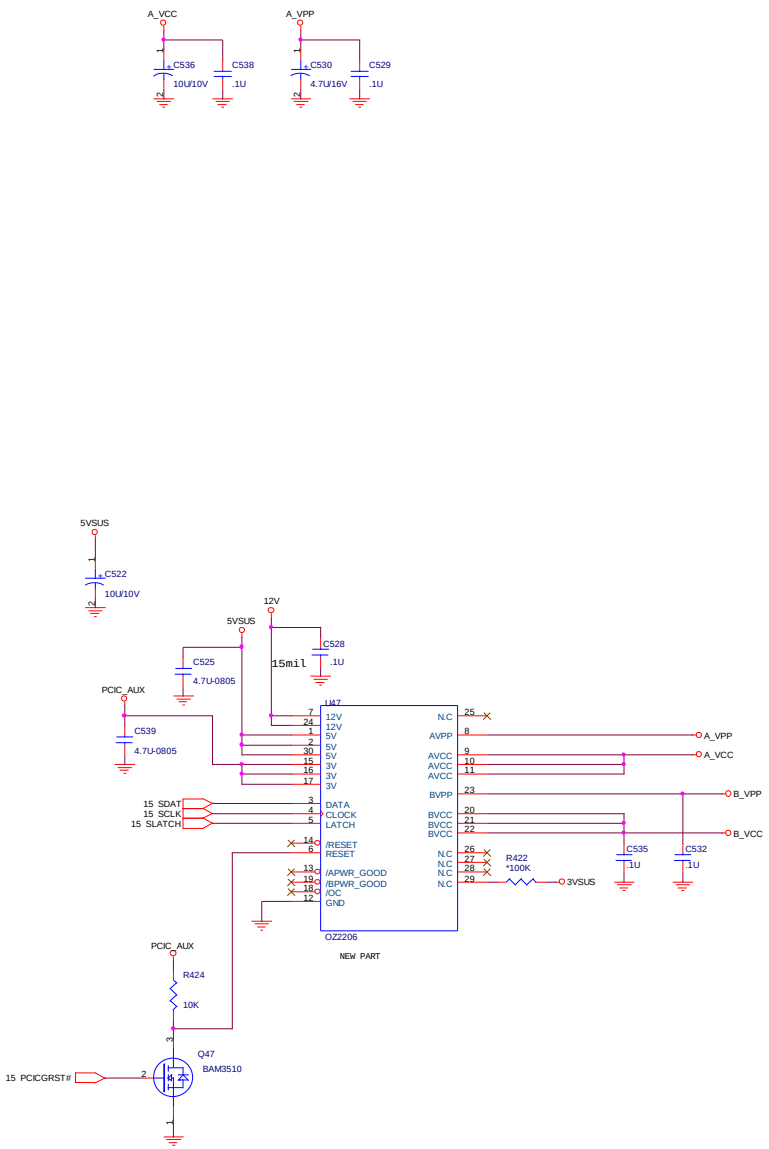


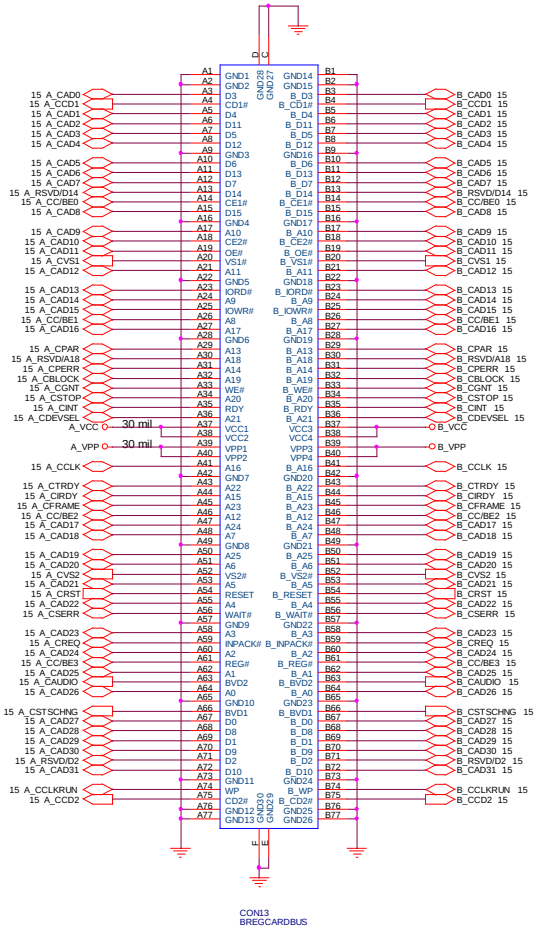


**PROJECT :EF4**
**Quanta Computer Inc.**

| Size | Document Number | Rev |
|---|---|---|
| | **CARBUS SLOT** | 1A |

Date: Wednesday, January 07, 2004 Sheet 16 of 34

The AMC20463-004 modem is used for mother board family MBAMC20463-004.

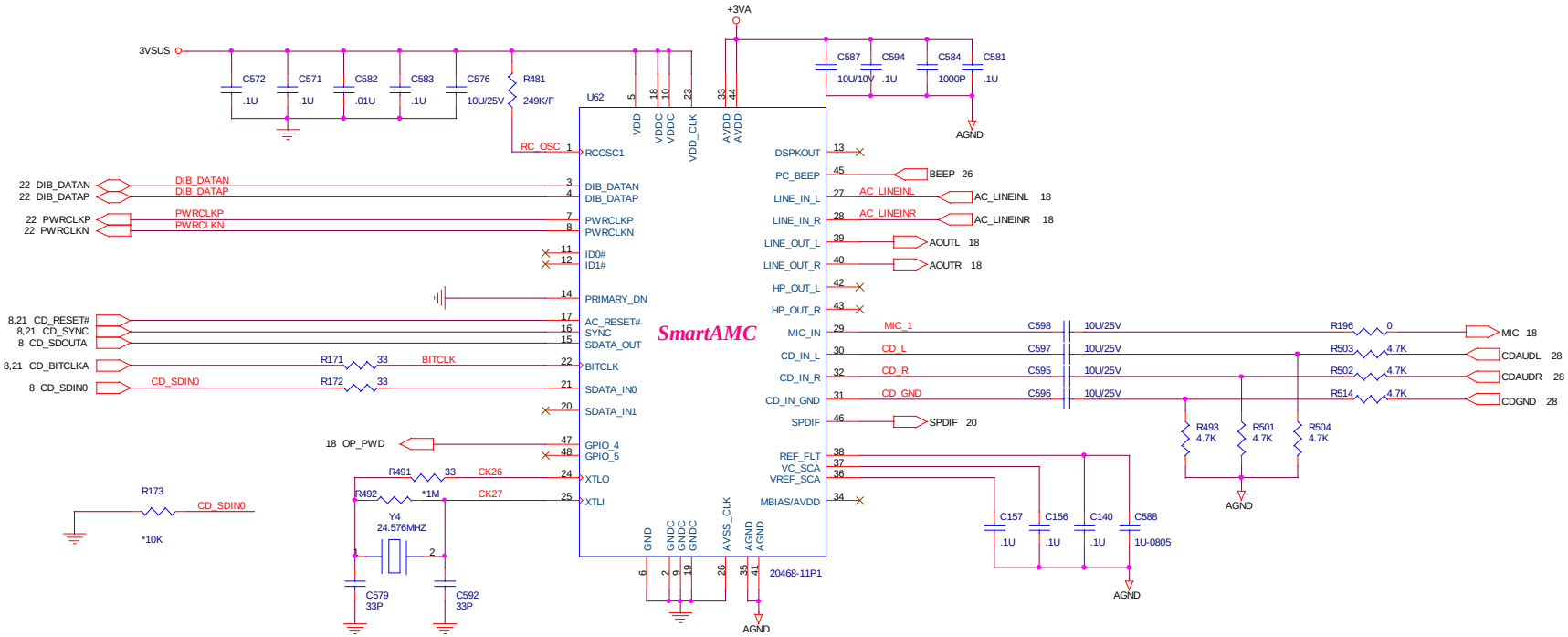


**PROJECT :EF4**
**Quanta Computer Inc.**

| Size | Document Number | Rev |
|---|---|---|
| | **AMC97** | 1A |

Date: Wednesday, January 07, 2004 Sheet 17 of 34

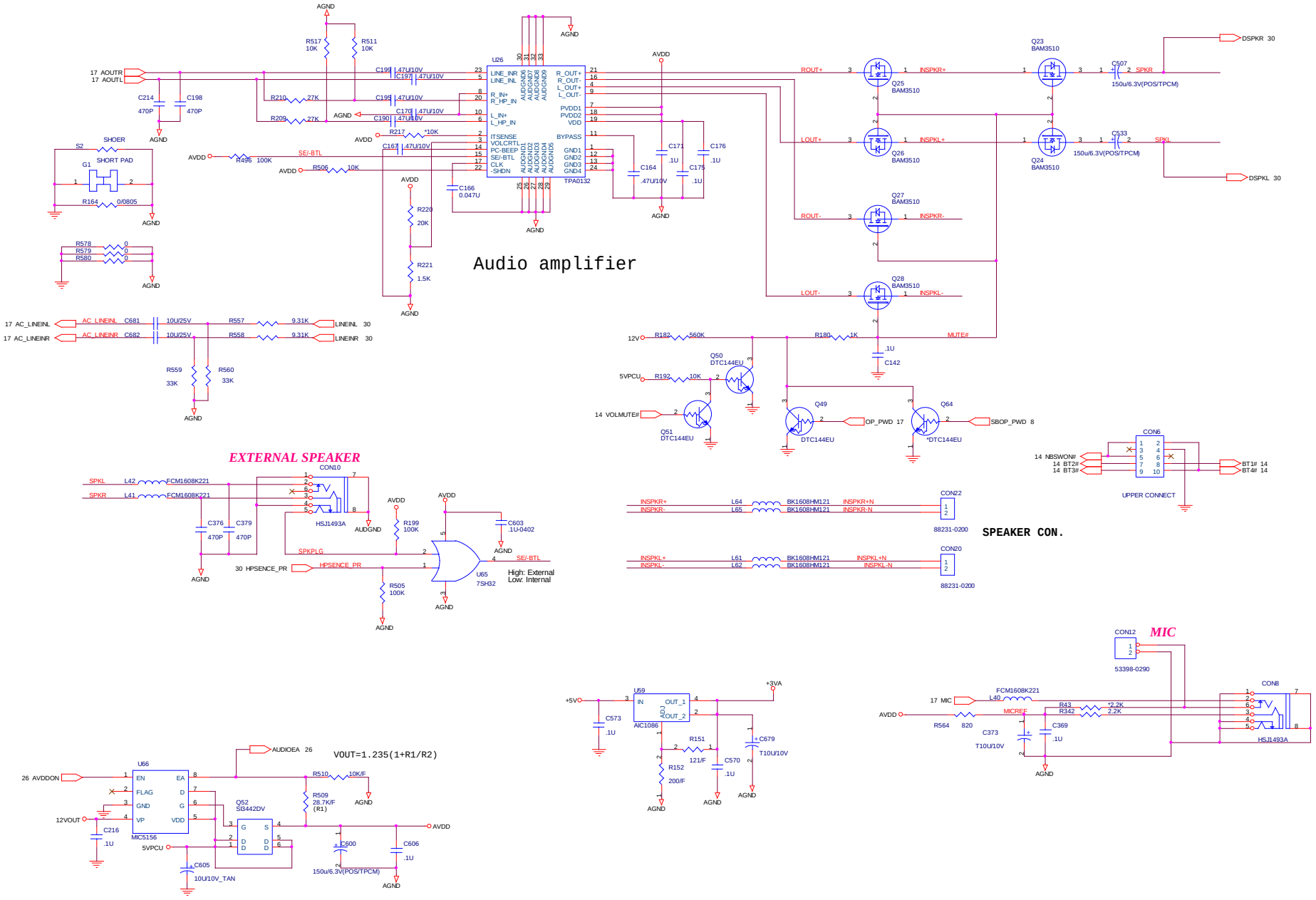


**PROJECT :EF4**
**Quanta Computer Inc.**

| Size | Document Number | Rev |
|---|---|---|
| | AMPLIFIER,UPPER/B | 1A |

Date: Wednesday, January 07, 2004 Sheet 18 of 34

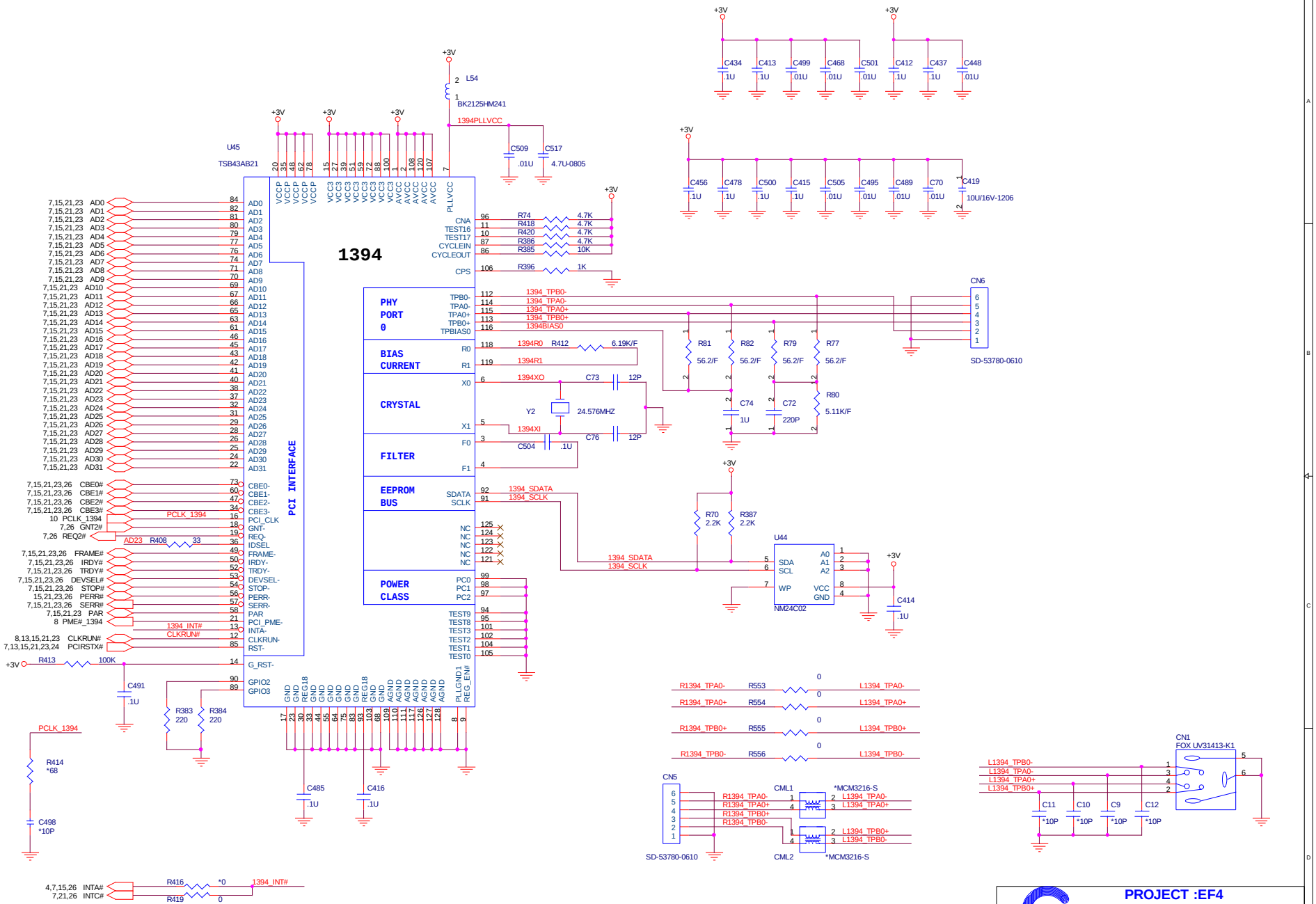
1394
U45
TSB43AB21
PCI INTERFACE
PHY PORT 0
BIAS CURRENT
CRYSTAL
FILTER
EEPROM BUS
POWER CLASS
L54
BK2125HM241
1394PLLVCC
C509 .01U
C517 4.7U-0805
C434 .1U
C413 .1U
C499 .01U
C468 .01U
C501 .01U
C412 .1U
C437 .1U
C448 .01U
C456 .1U
C478 .1U
C500 .1U
C415 .1U
C505 .01U
C495 .01U
C489 .01U
C70 .01U
C419 10U/16V-1206
CN6
SD-53780-0610
R81 56.2/F
R82 56.2/F
R79 56.2/F
R77 56.2/F
R80 5.11K/F
C74 1U
C72 220P
Y2 24.576MHZ
C73 12P
C76 12P
C504 .1U
R412 6.19K/F
R70 2.2K
R387 2.2K
U44
NM24C02
C414 .1U
R413 100K
C491 .1U
R383 220
R384 220
R414 *68
C498 *10P
C485 .1U
C416 .1U
R416 *0
R419 0
R553 0
R554 0
R555 0
R556 0
CN5
SD-53780-0610
CML1
CML2
*MCM3216-S
CN1
FOX UV31413-K1
C11 *10P
C10 *10P
C9 *10P
C12 *10P
PROJECT :EF4
Quanta Computer Inc.
Size
Document Number
TSB43AB21(1394)
Rev 1A
Date: Wednesday, January 07, 2004
Sheet 19 of 34

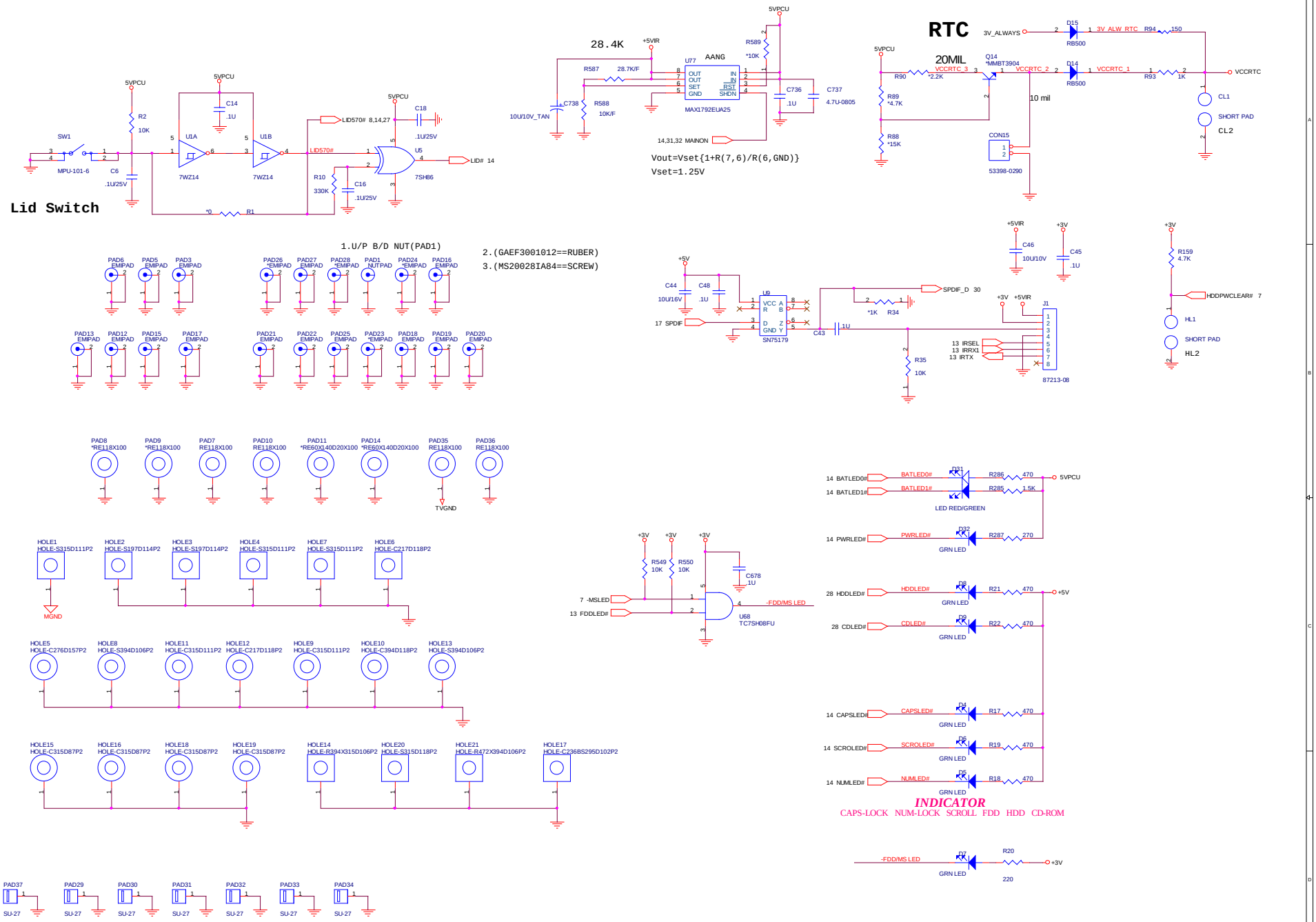
Lid Switch
SW1
MPU-101-6
5VPCU
R2
10K
C6
.1U/25V
U1A
7WZ14
U1B
7WZ14
C14
.1U
R1
*0
LID570#
LID570# 8,14,27
R10
330K
C16
.1U/25V
C18
.1U/25V
U5
7SH86
LID# 14
28.4K
+5VIR
R587
28.7K/F
U77
AANG
OUT
OUT
SET
GND
IN
IN
RST
SHDN
MAX1792EUA25
R588
10K/F
C738
10U/10V_TAN
R589
*10K
C736
.1U
C737
4.7U-0805
14,31,32 MAINON
Vout=Vset{1+R(7,6)/R(6,GND)}
Vset=1.25V
RTC
20MIL
3V_ALWAYS
D15
RB500
3V_ALW_RTC
R94
150
R90
*2.2K
VCCRTC_3
Q14
*MMBT3904
VCCRTC_2
D14
RB500
VCCRTC_1
R93
1K
VCCRTC
R89
*4.7K
R88
*15K
10 mil
CON15
53398-0290
CL1
SHORT PAD
CL2
1.U/P B/D NUT(PAD1)
2.(GAEF3001012==RUBER)
3.(MS20028IA84==SCREW)
PAD6 EMIPAD
PAD5 EMIPAD
PAD3 EMIPAD
PAD26 *EMIPAD
PAD27 EMIPAD
PAD28 *EMIPAD
PAD1 NUTPAD
PAD24 *EMIPAD
PAD16 EMIPAD
PAD13 EMIPAD
PAD12 EMIPAD
PAD15 EMIPAD
PAD17 EMIPAD
PAD21 EMIPAD
PAD22 EMIPAD
PAD25 EMIPAD
PAD23 *EMIPAD
PAD18 EMIPAD
PAD19 EMIPAD
PAD20 EMIPAD
C44
10U/16V
C48
.1U
17 SPDIF
U9
VCC
R
D
GND
A
B
Z
Y
SN75179
SPDIF_D 30
*1K
R34
C43
.1U
R35
10K
13 IRSEL
13 IRRX1
13 IRTX
J1
87213-08
C46
10U/10V
C45
.1U
R159
4.7K
HDDPWCLEAR# 7
HL1
SHORT PAD
HL2
PAD8 *RE118X100
PAD9 *RE118X100
PAD7 RE118X100
PAD10 RE118X100
PAD11 *RE60X140D20X100
PAD14 *RE60X140D20X100
PAD35 RE118X100
PAD36 RE118X100
TVGND
HOLE1 HOLE-S315D111P2
HOLE2 HOLE-S197D114P2
HOLE3 HOLE-S197D114P2
HOLE4 HOLE-S315D111P2
HOLE7 HOLE-S315D111P2
HOLE6 HOLE-C217D118P2
MGND
HOLE5 HOLE-C276D157P2
HOLE8 HOLE-S394D106P2
HOLE11 HOLE-C315D111P2
HOLE12 HOLE-C217D118P2
HOLE9 HOLE-C315D111P2
HOLE10 HOLE-C394D118P2
HOLE13 HOLE-S394D106P2
HOLE15 HOLE-C315D87P2
HOLE16 HOLE-C315D87P2
HOLE18 HOLE-C315D87P2
HOLE19 HOLE-C315D87P2
HOLE14 HOLE-R394X315D106P2
HOLE20 HOLE-S315D118P2
HOLE21 HOLE-R472X394D106P2
HOLE17 HOLE-C236BS295D102P2
PAD37 SU-27
PAD29 SU-27
PAD30 SU-27
PAD31 SU-27
PAD32 SU-27
PAD33 SU-27
PAD34 SU-27
R549
10K
R550
10K
C678
.1U
7 -MSLED
13 FDDLED#
U68
TC7SH08FU
-FDD/MS LED
14 BATLED0#
14 BATLED1#
BATLED0#
BATLED1#
D31
R286
470
R285
1.5K
5VPCU
LED RED/GREEN
14 PWRLED#
PWRLED#
D32
R287
270
GRN LED
28 HDDLED#
HDDLED#
D8
R21
470
+5V
28 CDLED#
CDLED#
D9
R22
470
14 CAPSLED#
CAPSLED#
D4
R17
470
14 SCROLED#
SCROLED#
D6
R19
470
14 NUMLED#
NUMLED#
D5
R18
470
INDICATOR
CAPS-LOCK NUM-LOCK SCROLL FDD HDD CD-ROM
-FDD/MS LED
D7
R20
220
+3V
PROJECT :EF4
Quanta Computer Inc.
Size
Document Number
LED,RTC,LID,IR,SPDIF
Rev
1A
Date: Wednesday, January 07, 2004
Sheet 20 of 34

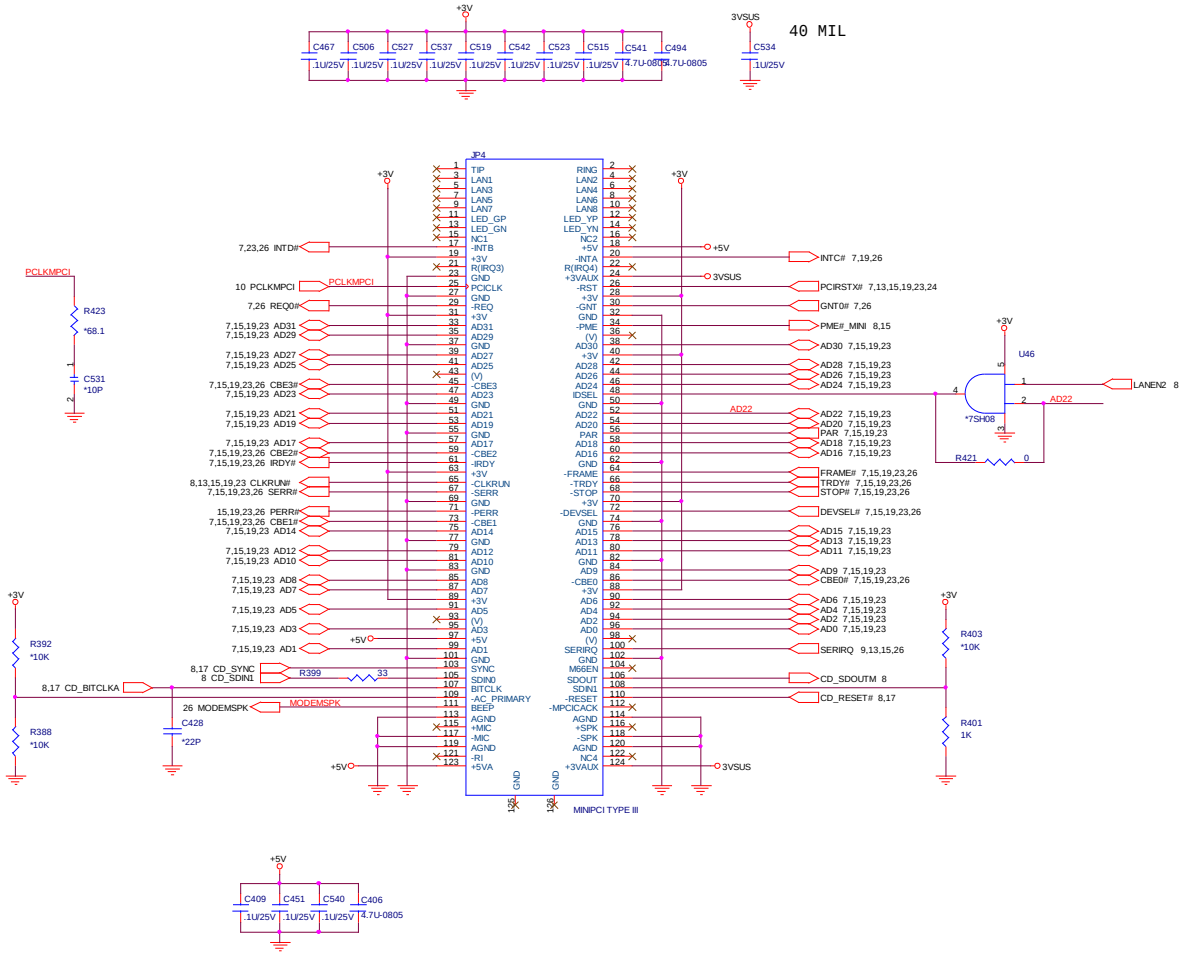


**PROJECT :EF4**
**Quanta Computer Inc.**

| Size | Document Number | Rev |
|---|---|---|
| | MINI-PCI | 1A |

Date: Wednesday, January 07, 2004 Sheet 21 of 34

The AMC20463-004 modem is used for mother board family MBAMC20463-004.

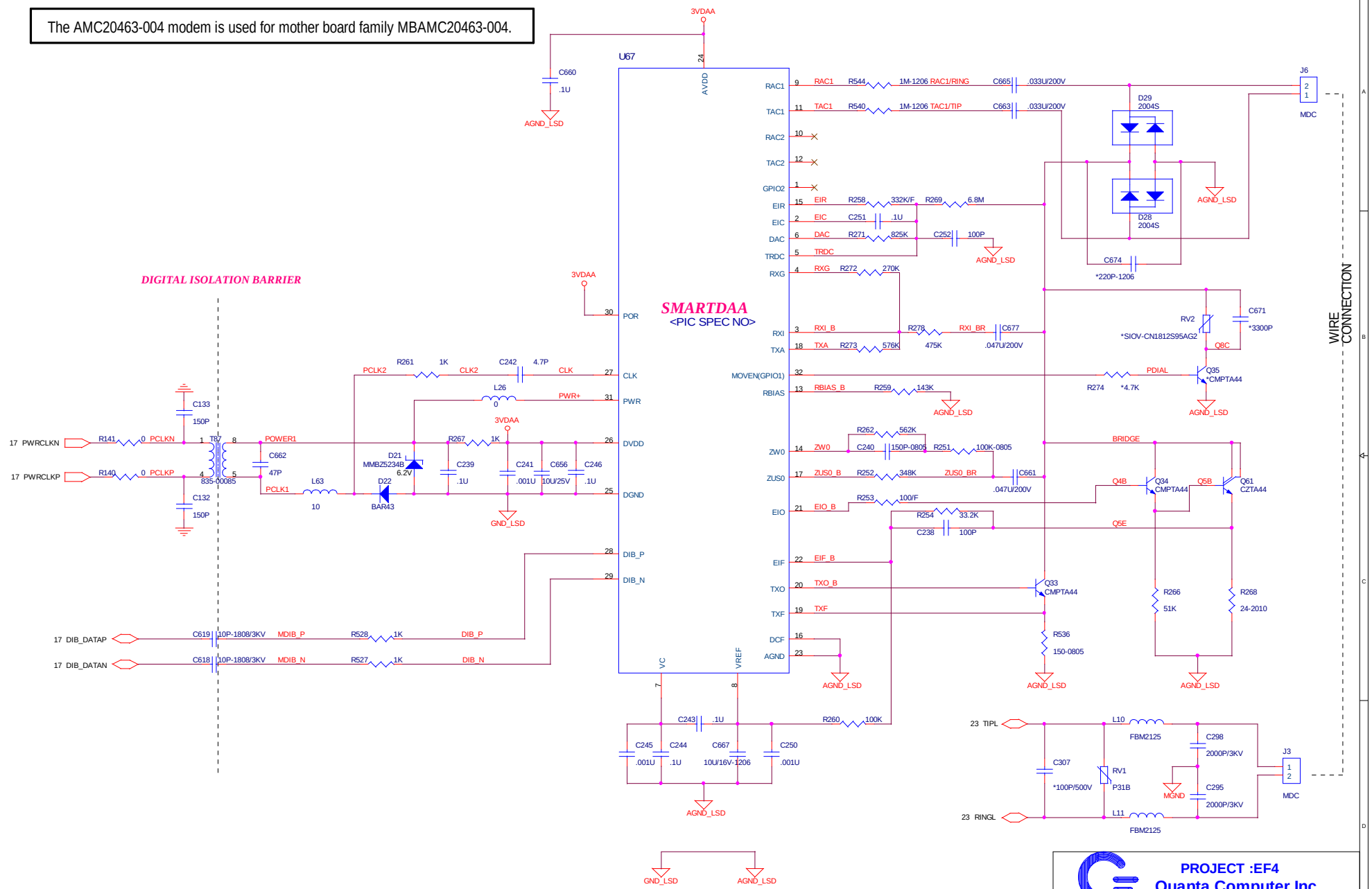


PROJECT :EF4
Quanta Computer Inc.

| Size | Document Number | Rev |
|---|---|---|
| | MODEM DAA | 1A |

Date: Wednesday, January 07, 2004 Sheet 22 of 34

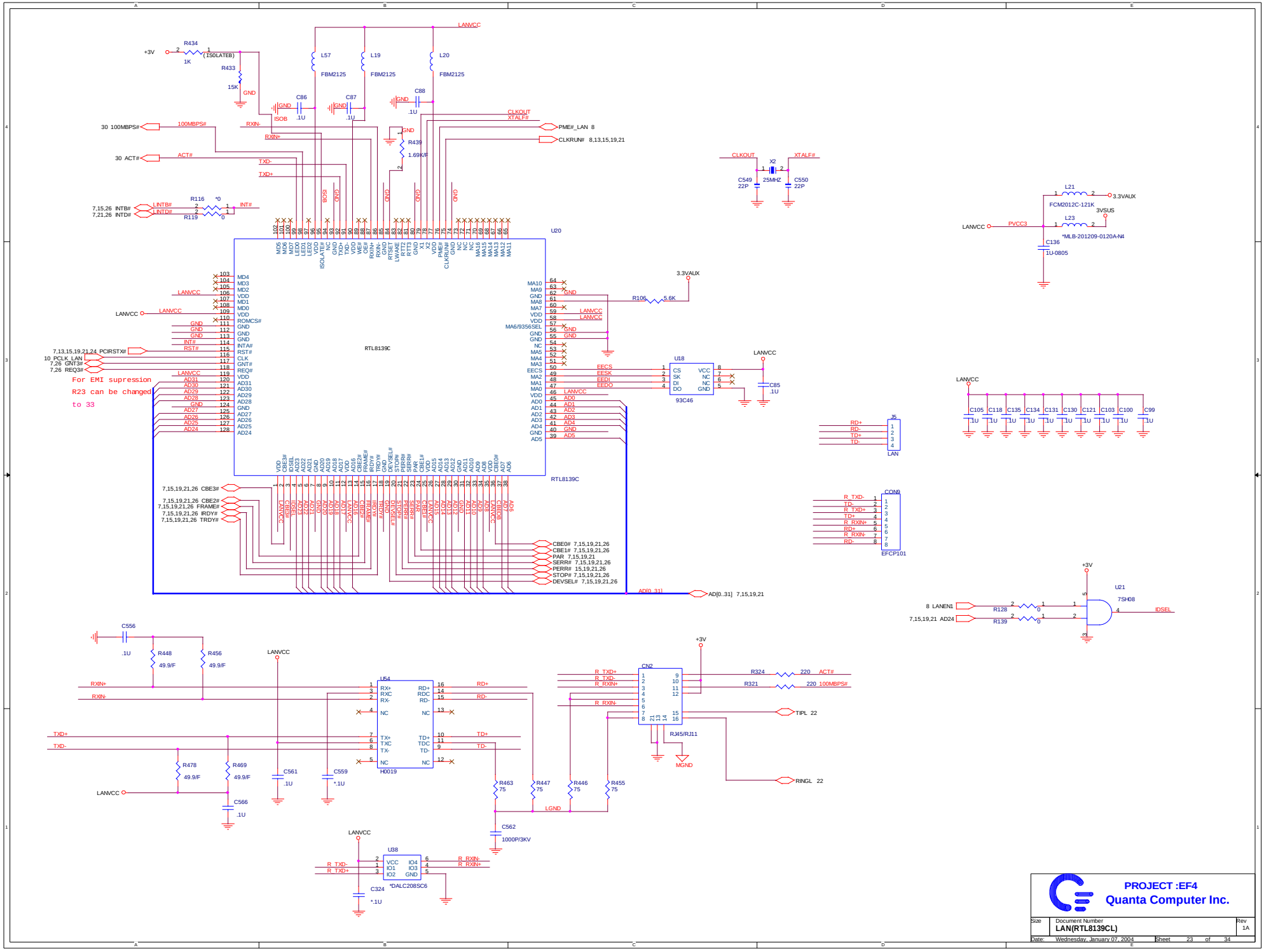
LANVCC
+3V
R434
1K
(ISOLATEB)
R433
15K
GND
L57
L19
L20
FBM2125
C86
C87
C88
.1U
ISOB
CLKOUT
XTALF#
PME# LAN 8
CLKRUN# 8,13,15,19,21
30 100MBPS#
100MBPS#
RXIN-
RXIN+
30 ACT#
ACT#
TXD-
TXD+
R439
1.69KJF
7,15,26 INTB#
7,21,26 INTD#
LINTB#
LINTD#
R116
*0
R119
INT#
U20
RTL8139C
3.3VAUX
R105
5.6K
MA6/9356SEL
EECS
EESK
EEDI
EEDO
U18
CS
SK
DI
DO
VCC
NC
GND
93C46
C85
.1U
7,13,15,19,21,24 PCIRSTX#
10 PCLK_LAN
7,26 GNT3#
7,26 REQ3#
RST#
CLK
GNT#
REQ#
For EMI supression
R23 can be changed
to 33
7,15,19,21,26 CBE3#
7,15,19,21,26 CBE2#
7,15,19,21,26 FRAME#
7,15,19,21,26 RDY#
7,15,19,21,26 TRDY#
CBE0# 7,15,19,21,26
CBE1# 7,15,19,21,26
PAR 7,15,19,21
SERR# 7,15,19,21,26
PERR# 15,19,21,26
STOP# 7,15,19,21,26
DEVSEL# 7,15,19,21,26
AD[0..31]
AD[0..31] 7,15,19,21
CLKOUT
XTALF#
X2
25MHZ
C549
22P
C550
22P
L21
FCM2012C-121K
3.3VAUX
3VSUS
L23
*MLB-201209-0120A-N4
PVCC3
C136
1U-0805
J5
RD+
RD-
TD+
TD-
LAN
C105
C118
C135
C134
C131
C130
C121
C103
C100
C99
1U
CON8
R_TXD-
TD-
R_TXD+
TD+
R_RXIN+
RD+
R_RXIN-
RD-
EFCP101
U21
7SH08
8 LANEN1
7,15,19,21 AD24
R128
R139
IDSEL
C556
.1U
R448
49.9/F
R456
49.9/F
U54
H0019
RX+
RXC
RX-
NC
TX+
TXC
TX-
RD+
RDC
RD-
TD+
TDC
TD-
R478
49.9/F
R469
49.9/F
C566
.1U
C561
.1U
C559
*.1U
R463
75
R447
75
R446
75
R455
75
LGND
C562
1000P/3KV
CN2
RJ45/RJ11
MGND
R324
220
ACT#
R321
220
100MBPS#
TIPL 22
RINGL 22
U38
VCC
IO1
IO2
IO4
IO3
GND
*DALC208SC6
C324
*.1U
R_RXIN-
R_RXIN+
PROJECT :EF4
Quanta Computer Inc.
Size
Document Number
LAN(RTL8139CL)
Rev
1A
Date: Wednesday, January 07, 2004
Sheet 23 of 34

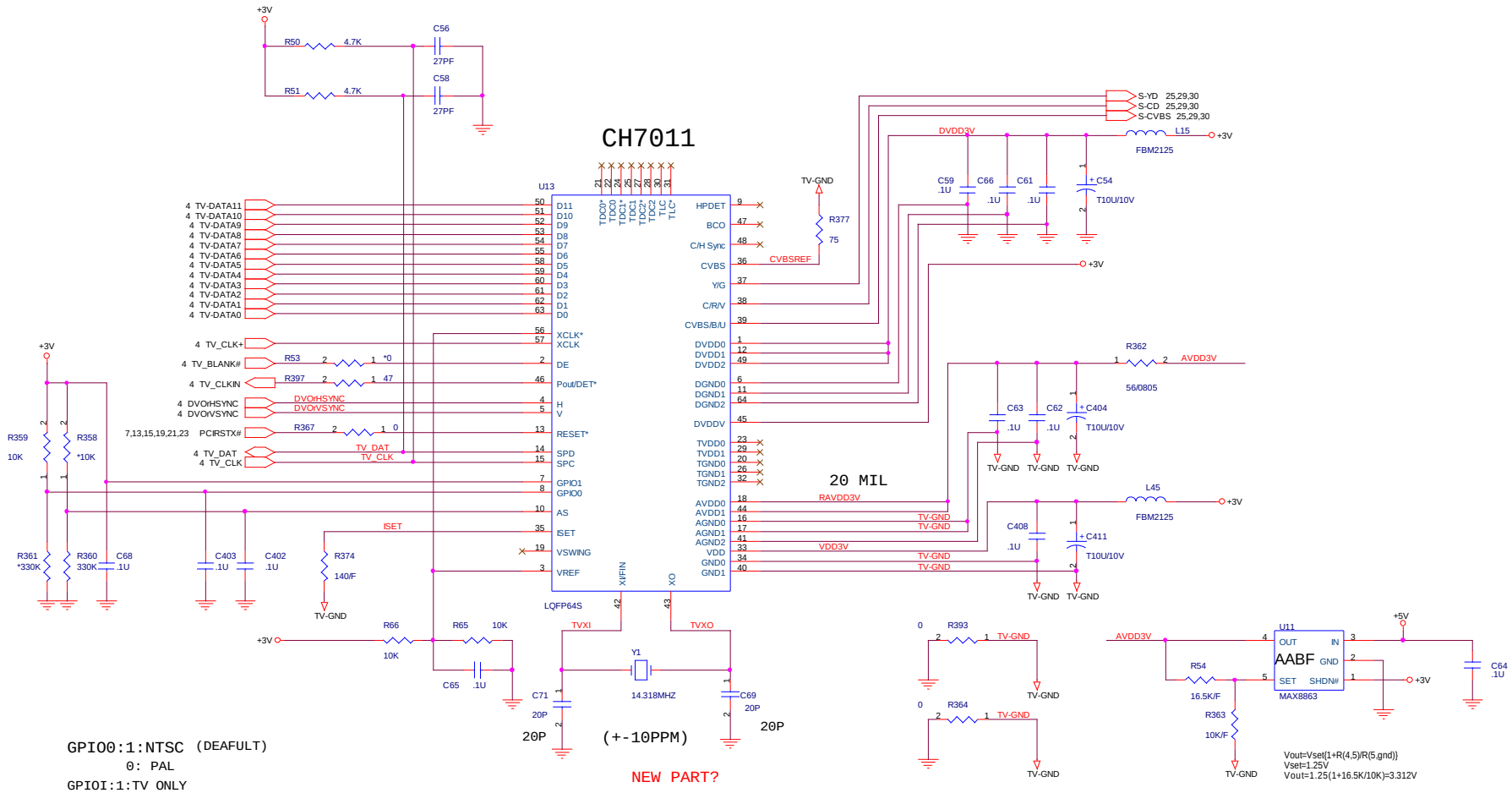


PROJECT :EF4
Quanta Computer Inc.

| Size | Document Number | Rev |
|---|---|---|
| | TV ENCODER(CH7011) | 1A |

Date: Wednesday, January 07, 2004 Sheet 24 of 34

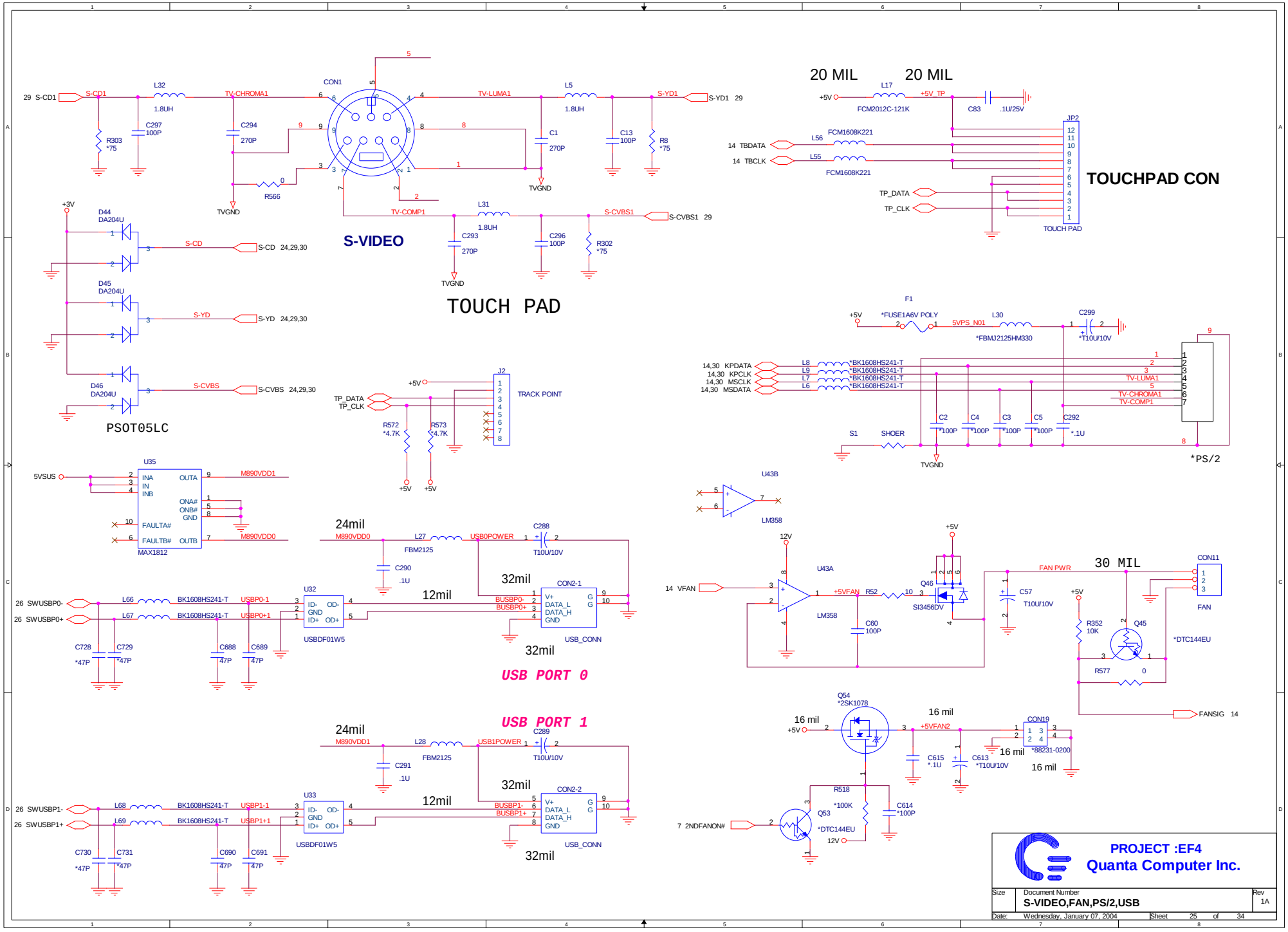
S-VIDEO
TOUCH PAD
TOUCHPAD CON
20 MIL
20 MIL
PSOT05LC
TRACK POINT
*PS/2
USB PORT 0
USB PORT 1
24mil
12mil
32mil
30 MIL
16 mil
PROJECT :EF4
Quanta Computer Inc.
Size
Document Number
S-VIDEO,FAN,PS/2,USB
Rev
1A
Date: Wednesday, January 07, 2004
Sheet 25 of 34

# PCI Bus pull high resistor

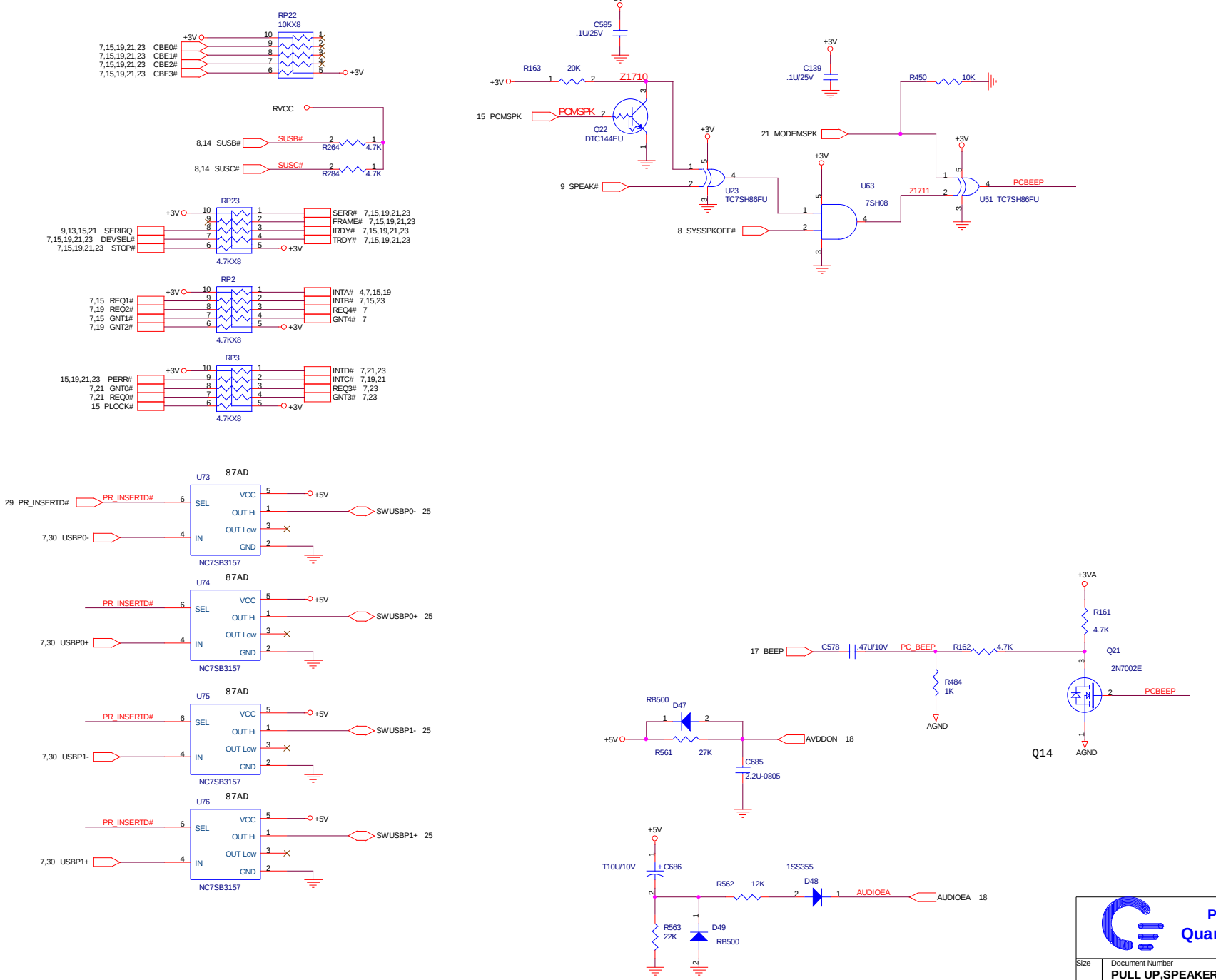


**PROJECT :EF4**
**Quanta Computer Inc.**

| Size | Document Number | Rev |
|---|---|---|
| | PULL UP,SPEAKER | 1A |

Date: Wednesday, January 07, 2004 Sheet 26 of 34

# LVDS TRANSMITTER

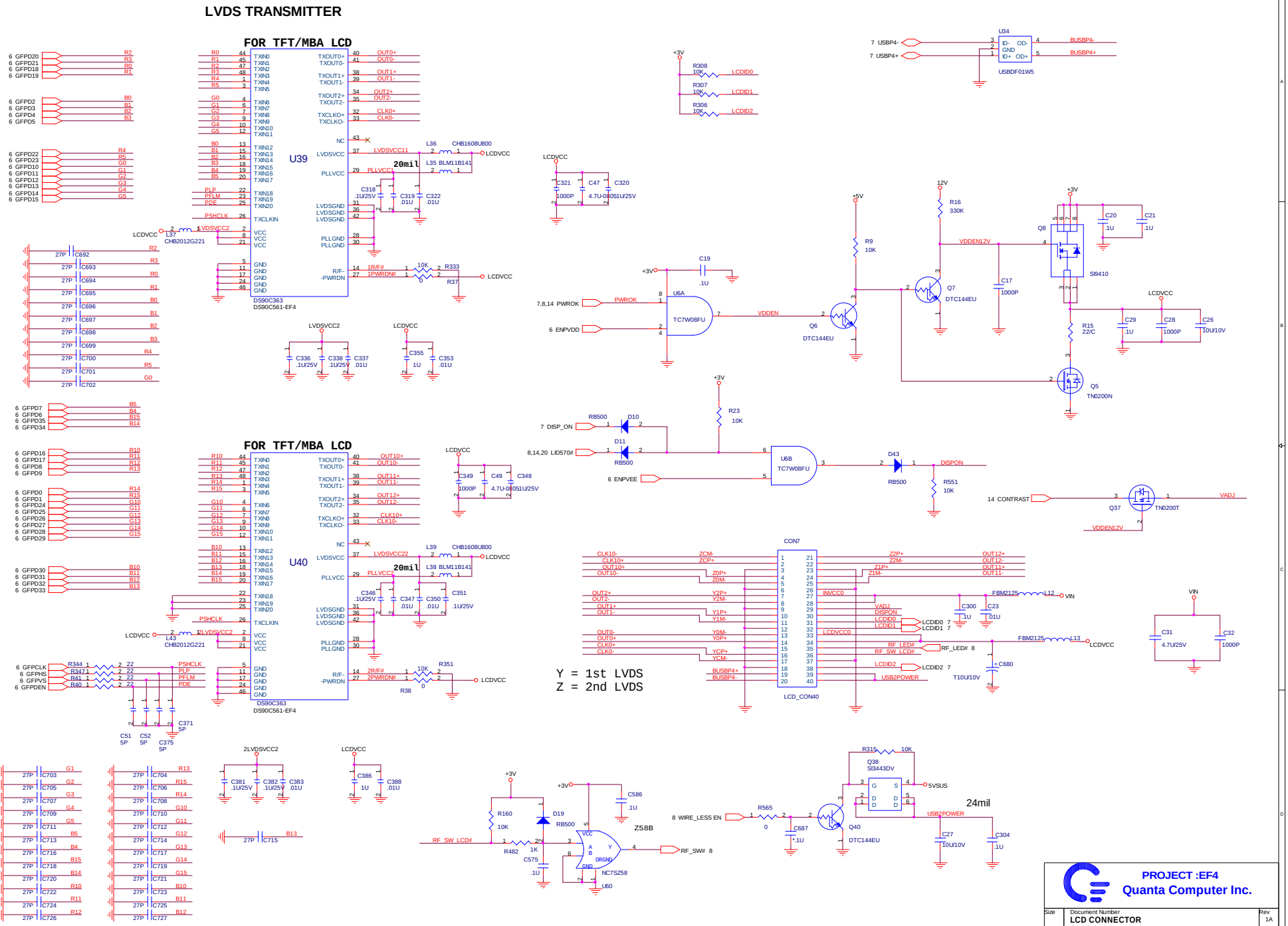

# HDD connector

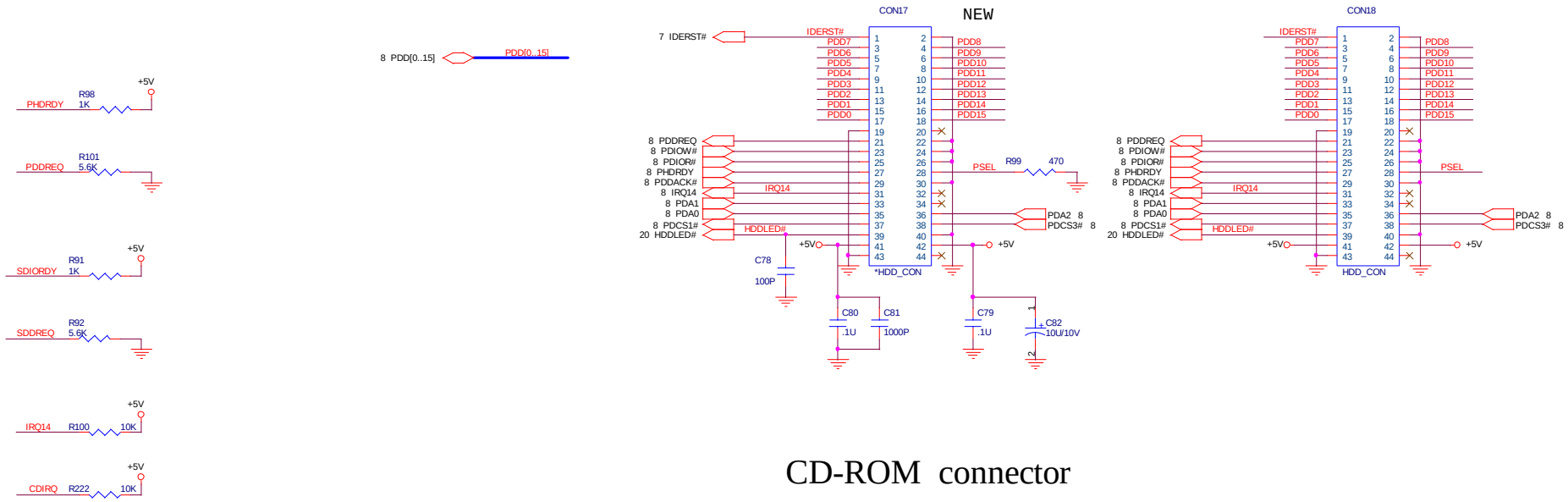


# CD-ROM connector

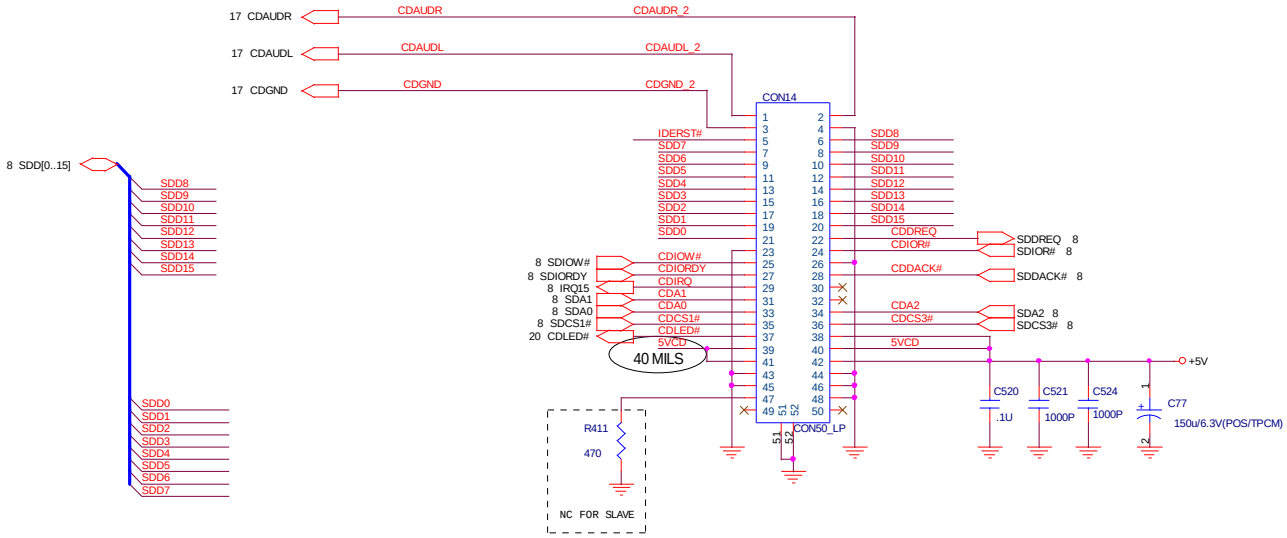


**PROJECT :EF4**
**Quanta Computer Inc.**

| Size | Document Number | Rev |
|---|---|---|
| | **HDD,CD-ROM** | 1A |

Date: Wednesday, January 07, 2004 Sheet 28 of 34

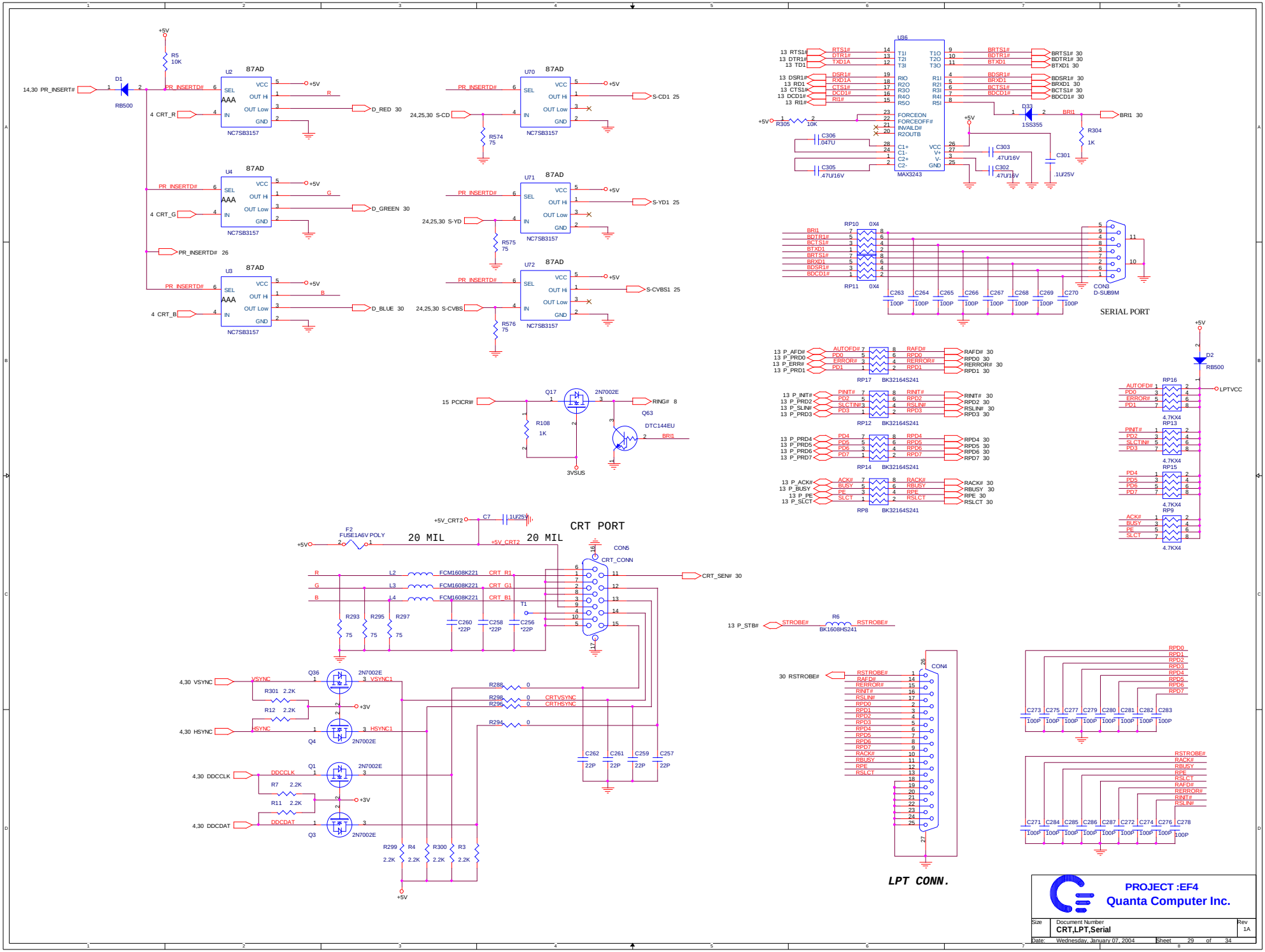
CRT PORT
SERIAL PORT
LPT CONN.
20 MIL
20 MIL
U2 87AD NC7SB3157
U4 87AD NC7SB3157
U3 87AD NC7SB3157
U70 87AD NC7SB3157
U71 87AD NC7SB3157
U72 87AD NC7SB3157
U36 MAX3243
CON3 D-SUB9M
CON5 CRT_CONN
CON4
PROJECT :EF4
Quanta Computer Inc.
Document Number
CRT,LPT,Serial
Rev 1A
Date: Wednesday, January 07, 2004
Sheet 29 of 34

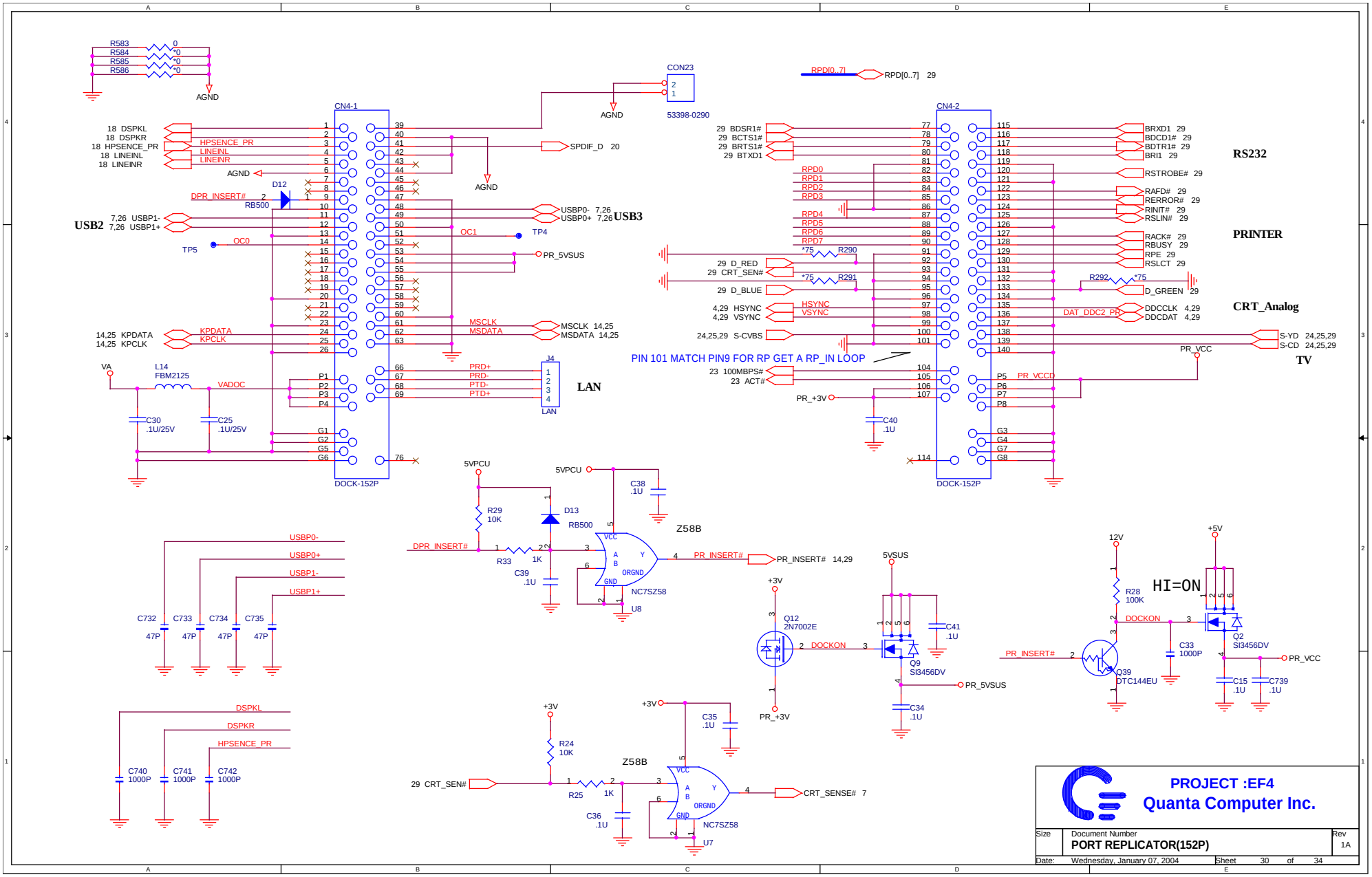
R583 0
R584 *0
R585 *0
R586 *0
AGND
CN4-1
DOCK-152P
CON23
53398-0290
18 DSPKL
18 DSPKR
18 HPSENCE_PR
18 LINEINL
18 LINEINR
HPSENCE_PR
LINEINL
LINEINR
SPDIF_D 20
DPR_INSERT#
D12
RB500
USB2
7,26 USBP1-
7,26 USBP1+
USBP0- 7,26
USBP0+ 7,26
USB3
OC0
OC1
TP5
TP4
PR_5VSUS
14,25 KPDATA
14,25 KPCLK
KPDATA
KPCLK
MSCLK
MSDATA
MSCLK 14,25
MSDATA 14,25
VA
L14
FBM2125
VADOC
C30 .1U/25V
C25 .1U/25V
PRD+
PRD-
PTD-
PTD+
J4
LAN
RPD[0..7]
RPD[0..7] 29
CN4-2
29 BDSR1#
29 BCTS1#
29 BRTS1#
29 BTXD1
BRXD1 29
BDCD1# 29
BDTR1# 29
BRI1 29
RS232
RPD0
RPD1
RPD2
RPD3
RPD4
RPD5
RPD6
RPD7
RSTROBE# 29
RAFD# 29
RERROR# 29
RINIT# 29
RSLIN# 29
RACK# 29
RBUSY 29
RPE 29
RSLCT 29
PRINTER
*75
R290
R291
R292
29 D_RED
29 CRT_SEN#
29 D_BLUE
D_GREEN 29
4,29 HSYNC
4,29 VSYNC
DAT_DDC2_PR
DDCCLK 4,29
DDCDAT 4,29
CRT_Analog
24,25,29 S-CVBS
S-YD 24,25,29
S-CD 24,25,29
TV
PR_VCC
PIN 101 MATCH PIN9 FOR RP GET A RP_IN LOOP
23 100MBPS#
23 ACT#
PR_+3V
C40 .1U
5VPCU
R29 10K
D13
RB500
C38 .1U
Z58B
DPR_INSERT#
R33 1K
C39 .1U
NC7SZ58
U8
PR_INSERT#
PR_INSERT# 14,29
USBP0-
USBP0+
USBP1-
USBP1+
C732 47P
C733 47P
C734 47P
C735 47P
+3V
Q12 2N7002E
DOCKON
5VSUS
Q9 SI3456DV
C41 .1U
C34 .1U
12V
R28 100K
HI=ON
+5V
Q2 SI3456DV
C33 1000P
Q39 DTC144EU
C15 .1U
C739 .1U
DSPKL
DSPKR
HPSENCE_PR
C740 1000P
C741 1000P
C742 1000P
R24 10K
C35 .1U
29 CRT_SEN#
R25 1K
C36 .1U
U7
CRT_SENSE# 7
PROJECT :EF4
Quanta Computer Inc.
Size
Document Number
PORT REPLICATOR(152P)
Rev
1A
Date: Wednesday, January 07, 2004
Sheet 30 of 34

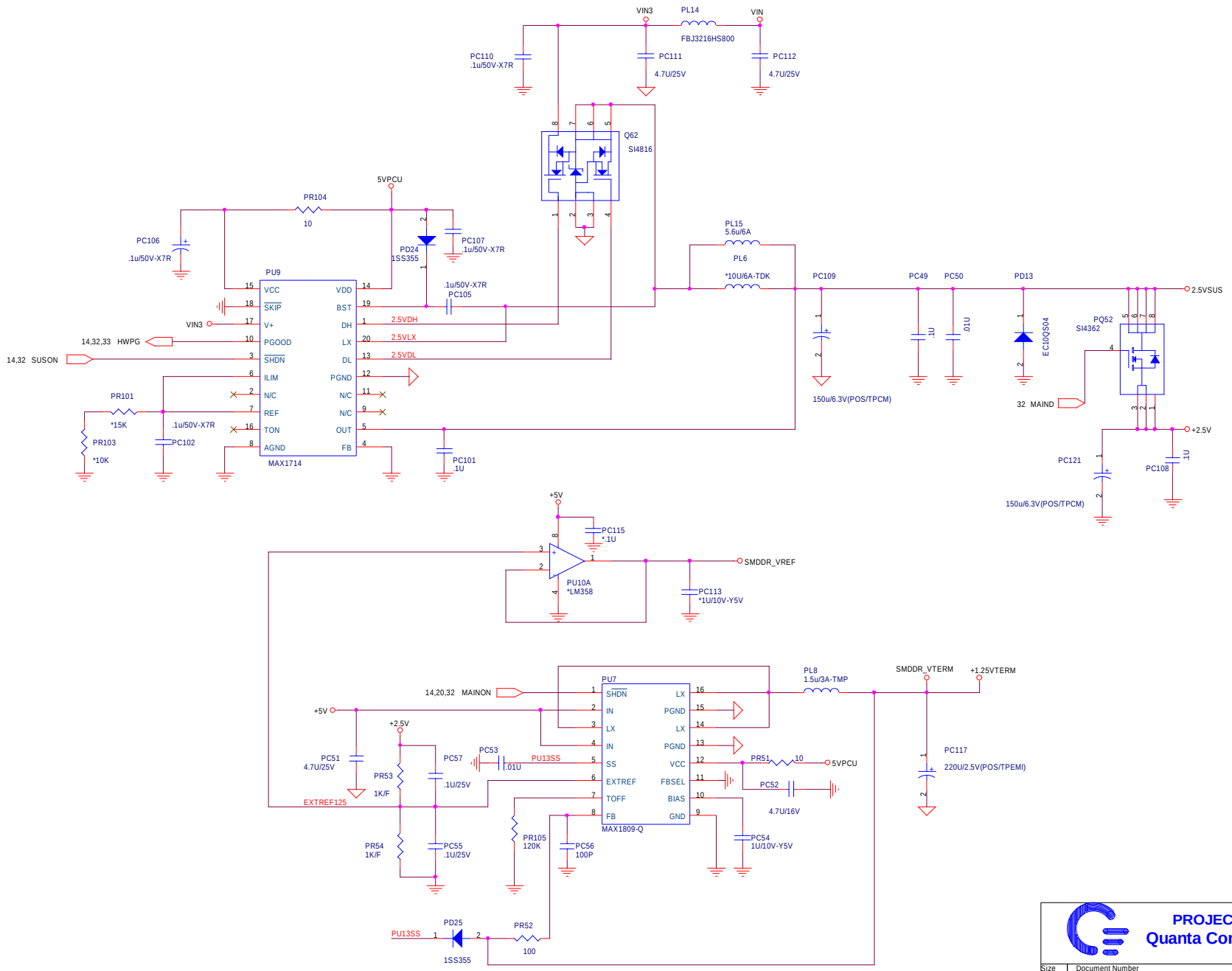


**PROJECT :EF4**
**Quanta Computer Inc.**

| Size | Document Number | Rev |
|---|---|---|
| | **1.25VDDR,2.5V(MAX1714)** | 1A |

Date: Wednesday, January 07, 2004 Sheet 31 of 34

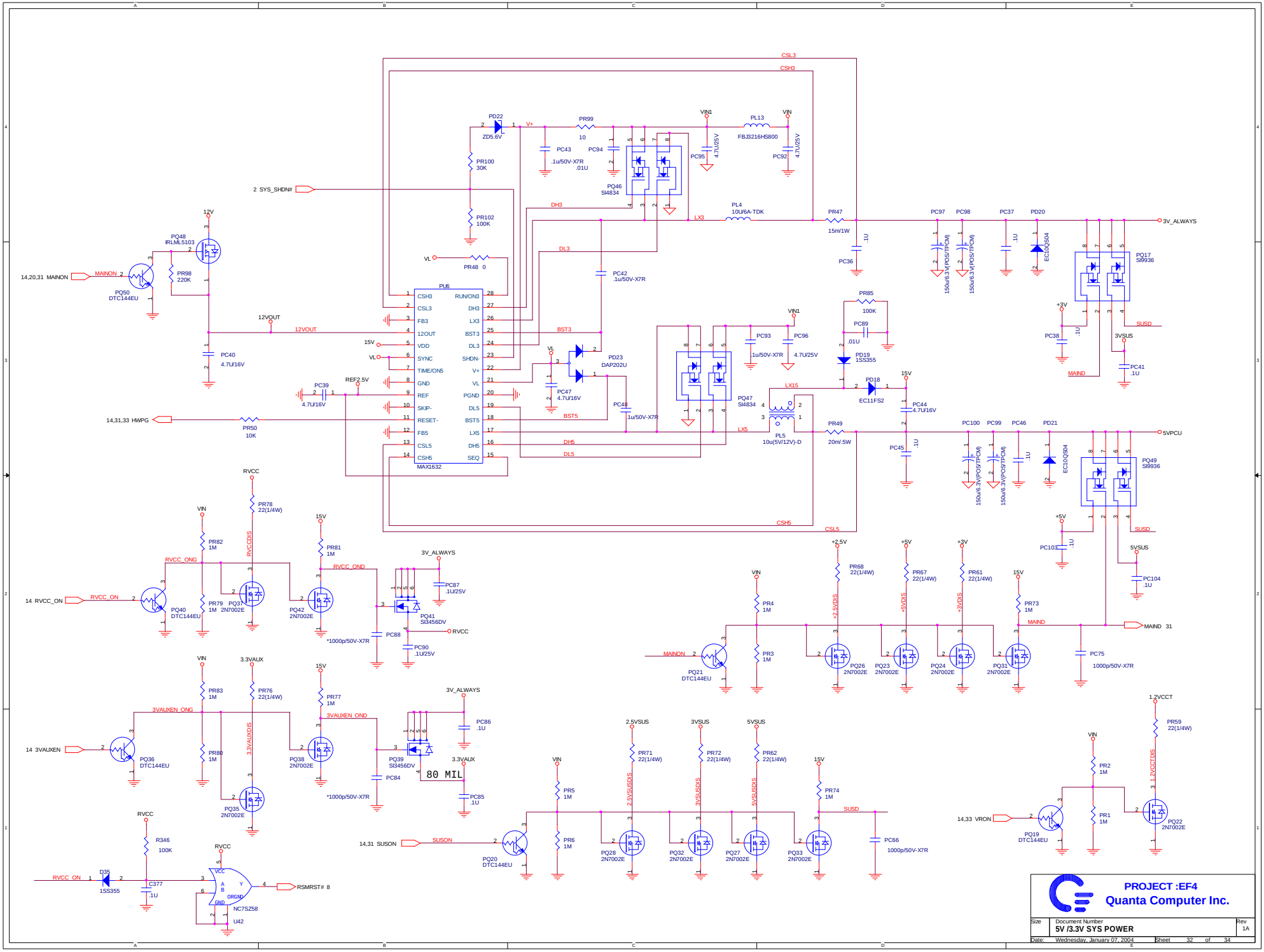
PU6
MAX1632
CSH3
CSL3
FB3
12OUT
VDD
SYNC
TIME/ON5
GND
REF
SKIP-
RESET-
FB5
CSL5
CSH5
RUN/ON3
DH3
LX3
BST3
DL3
SHDN-
V+
VL
PGND
DL5
BST5
LX5
DH5
SEQ
PD22
ZD5.6V
PR99
10
PC43
.1u/50V-X7R
PC94
.01U
PQ46
SI4834
PC95
4.7U/25V
PL13
FBJ3216HS800
PC92
PR100
30K
PR102
100K
PR48 0
PC42
.1u/50V-X7R
PL4
10U/6A-TDK
PR47
15m/1W
PC36
.1U
PC97
PC98
150u/6.3V(POS/TPCM)
PC37
PD20
EC10QS04
PQ17
SI9936
3V_ALWAYS
SUSD
3VSUS
PC38
PC41
MAIND
PQ48
IRLML5103
PR98
220K
PQ50
DTC144EU
12VOUT
PC40
4.7U/16V
PC39
REF2.5V
PR50
10K
PD23
DAP202U
PC47
4.7U/16V
PC49
PR85
100K
PC89
PD19
1SS355
PC93
PC96
PQ47
SI4834
PD18
EC11FS2
LX15
PL5
10u(5V/12V)-D
PC44
PC45
PR49
20m/.5W
PC100
PC99
PC46
PD21
5VPCU
PQ49
SI9936
5VSUS
PC103
PC104
PR78
22(1/4W)
PR82
1M
RVCC_ONG
RVCCDIS
PR81
RVCC_OND
PQ40
DTC144EU
PR79
PQ37
2N7002E
PQ42
2N7002E
*1000p/50V-X7R
PC88
PC87
.1U/25V
PQ41
SI3456DV
PC90
.1U/25V
RVCC
PR68
22(1/4W)
PR67
22(1/4W)
PR61
22(1/4W)
+2.5VDIS
+5VDIS
+3VDIS
PR4
1M
PR3
1M
PQ21
DTC144EU
PQ26
2N7002E
PQ23
2N7002E
PQ24
2N7002E
PQ31
2N7002E
PR73
1M
PC75
1000p/50V-X7R
MAIND 31
PR83
1M
PR76
22(1/4W)
3VAUXEN_ONG
3.3VAUXDIS
PR77
1M
3VAUXEN_OND
PQ36
DTC144EU
PR80
1M
PQ35
2N7002E
PQ38
2N7002E
PC84
PQ39
SI3456DV
PC86
.1U
PC85
.1U
80 MIL
3.3VAUX
PR71
22(1/4W)
PR72
22(1/4W)
PR62
22(1/4W)
2.5VSUSDIS
3VSUSDIS
5VSUSDIS
PR5
1M
PR6
1M
PQ20
DTC144EU
PQ28
2N7002E
PQ32
2N7002E
PQ27
2N7002E
PQ33
2N7002E
PR74
1M
PC66
1000p/50V-X7R
1.2VCCT
PR59
22(1/4W)
1.2VCCTDIS
PR2
1M
PR1
1M
PQ19
DTC144EU
PQ22
2N7002E
R346
100K
D35
1SS355
C377
.1U
NC7SZ58
U42
RSMRST# 8
2 SYS_SHDN#
14,20,31 MAINON
14,31,33 HWPG
14 RVCC_ON
14 3VAUXEN
14,31 SUSON
14,33 VRON
PROJECT :EF4
Quanta Computer Inc.
Size
Document Number
5V /3.3V SYS POWER
Rev
1A
Date: Wednesday, January 07, 2004
Sheet 32 of 34

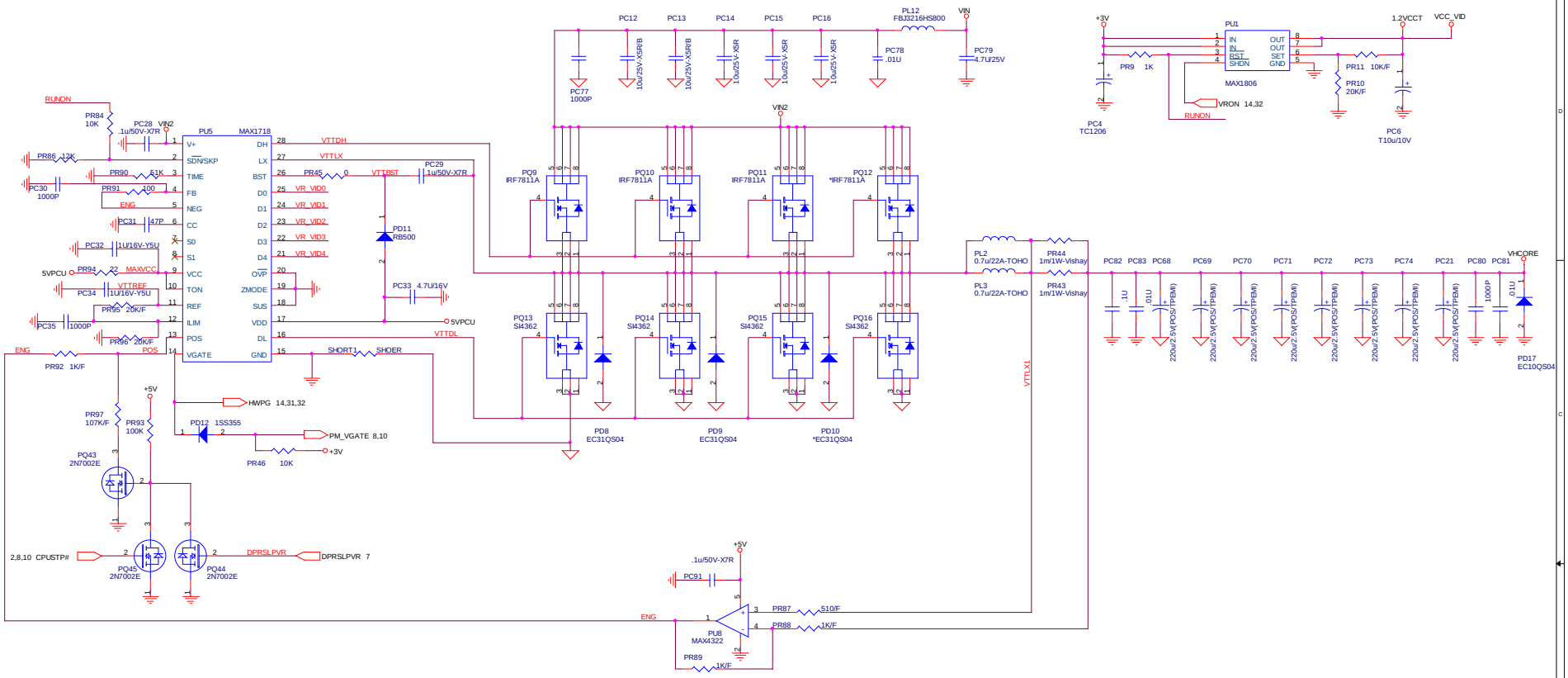


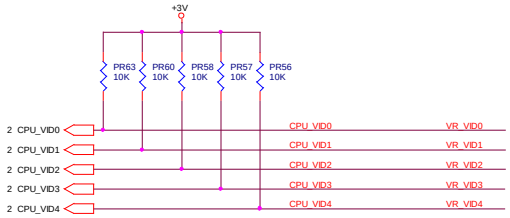


| D4 | D3 | D2 | D1 | D0 | Output Voltage | |
|---|---|---|---|---|---|---|
| 0 | 0 | 0 | 0 | 0 | 1.75V | |
| 0 | 0 | 0 | 0 | 1 | 1.70V | |
| 0 | 0 | 0 | 1 | 0 | 1.65V | |
| 0 | 0 | 0 | 1 | 1 | 1.60V | |
| 0 | 0 | 1 | 0 | 0 | 1.55V | |
| 0 | 0 | 1 | 0 | 1 | 1.50V | |
| 0 | 0 | 1 | 1 | 0 | 1.45V | |
| 0 | 0 | 1 | 1 | 1 | 1.40V | |
| 0 | 1 | 0 | 0 | 0 | 1.35V | |
| 0 | 1 | 0 | 0 | 1 | 1.30V | Performance & Battery Mode |
| 0 | 1 | 0 | 1 | 0 | 1.25V | |
| 0 | 1 | 0 | 1 | 1 | 1.20V | |
| 0 | 1 | 1 | 0 | 0 | 1.15V | Deep Sleep Mode |
| 0 | 1 | 1 | 0 | 1 | 1.10V | |
| 0 | 1 | 1 | 1 | 0 | 1.05V | |
| 0 | 1 | 1 | 1 | 1 | 1.00V | Deeper Sleep Mode |
| 1 | 0 | 0 | 0 | 0 | 0.975V | |
| 1 | 0 | 0 | 0 | 1 | 0.950V | |
| 1 | 0 | 0 | 1 | 0 | 0.925V | |
| 1 | 0 | 0 | 1 | 1 | 0.900V | |
| 1 | 0 | 1 | 0 | 0 | 0.875V | |
| 1 | 0 | 1 | 0 | 1 | 0.850V | |
| 1 | 0 | 1 | 1 | 0 | 0.825V | |
| 1 | 0 | 1 | 1 | 1 | 0.800V | |
| 1 | 1 | 0 | 0 | 0 | 0.775V | |
| 1 | 1 | 0 | 0 | 1 | 0.750V | |
| 1 | 1 | 0 | 1 | 0 | 0.725V | |
| 1 | 1 | 0 | 1 | 1 | 0.700V | |
| 1 | 1 | 1 | 0 | 0 | 0.675V | |
| 1 | 1 | 1 | 0 | 1 | 0.650V | |
| 1 | 1 | 1 | 1 | 0 | 0.625V | |
| 1 | 1 | 1 | 1 | 1 | 0.600V | |

**PROJECT :EF4**
**Quanta Computer Inc.**

| Size | Document Number | Rev |
|---|---|---|
| | **CPU CORE (MAX1718)** | 1A |

Date: Wednesday, January 07, 2004 Sheet 33 of 34

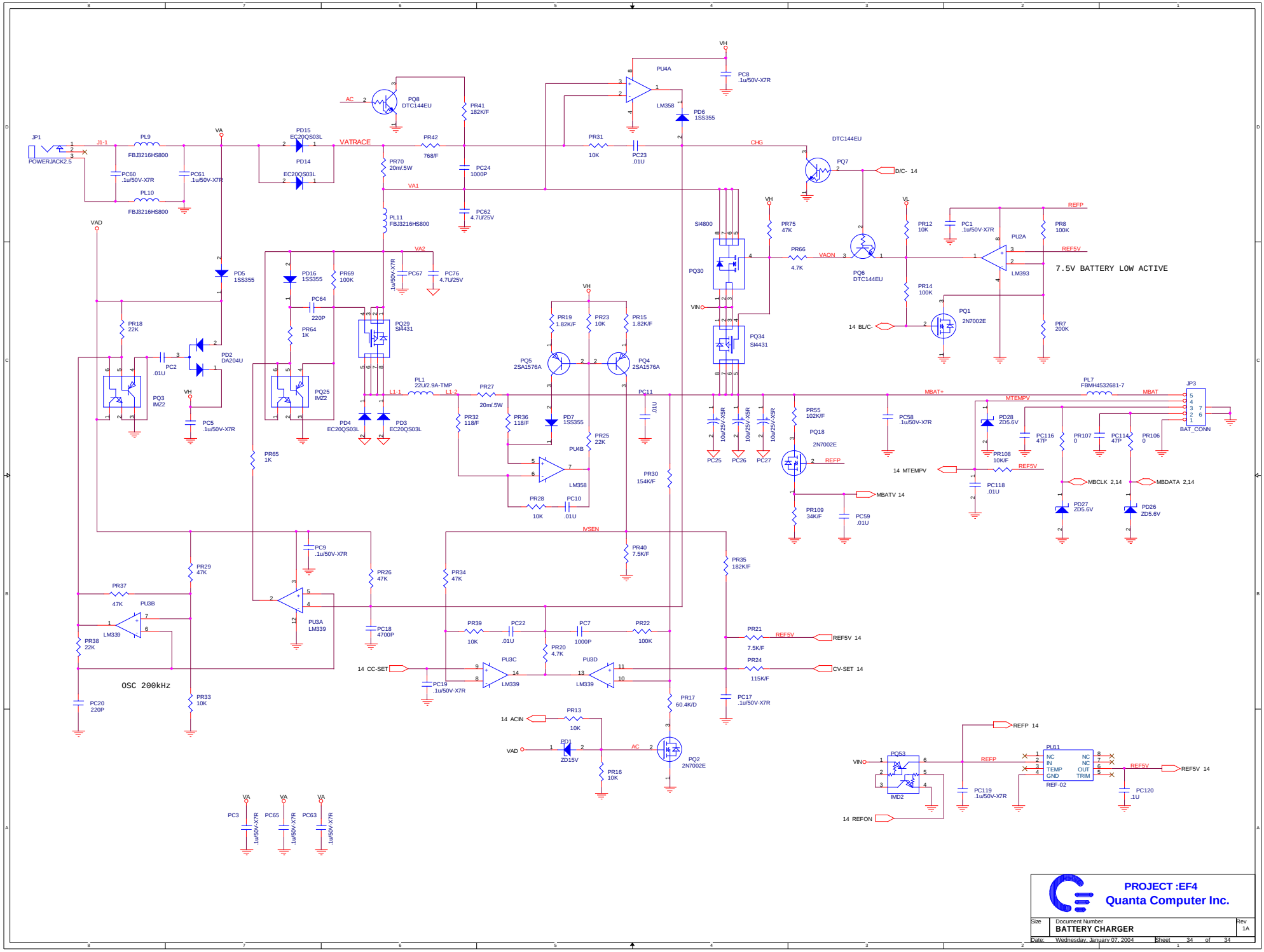
JP1
POWERJACK2.5
J1-1
PL9
FBJ3216HS800
PL10
FBJ3216HS800
PC60
.1u/50V-X7R
PC61
.1u/50V-X7R
VA
VAD
PD5
1SS355
PR18
22K
PD2
DA204U
PC2
.01U
PQ3
IMZ2
VH
PC5
.1u/50V-X7R
PD15
EC20QS03L
PD14
EC20QS03L
VATRACE
PR42
768/F
PR70
20m/.5W
VA1
PL11
FBJ3216HS800
PC62
4.7U/25V
PC24
1000P
PR41
182K/F
PQ8
DTC144EU
AC
PD16
1SS355
PR69
100K
PC64
220P
PR64
1K
PQ25
IMZ2
PQ29
SI431
VA2
PC67
PC76
4.7U/25V
PD4
EC20QS03L
PD3
EC20QS03L
PL1
22U/2.9A-TMP
L1-1
L1-2
PR27
20m/.5W
PR32
118/F
PR36
118/F
PR65
1K
PU4A
LM358
PD6
1SS355
PC8
.1u/50V-X7R
PR31
10K
PC23
.01U
CHG
DTC144EU
PQ7
D/C- 14
PR19
1.82K/F
PR23
10K
PR15
1.82K/F
PQ5
2SA1576A
PQ4
2SA1576A
PD7
1SS355
PR25
22K
PU4B
LM358
PR28
10K
PC10
.01U
PC11
.01U
PR30
154K/F
SI4800
PQ30
PQ34
SI431
VIN
PR75
47K
PR66
4.7K
VAON
PQ6
DTC144EU
VL
PR12
10K
PR14
100K
PQ1
2N7002E
14 BL/C-
PC1
.1u/50V-X7R
PU2A
LM393
REFP
REF5V
PR8
100K
PR7
200K
7.5V BATTERY LOW ACTIVE
PC25
10u/25V-X5R
PC26
10u/25V-X5R
PC27
10u/25V-X5R
PR55
102K/F
PQ18
2N7002E
PR109
34K/F
PC59
.01U
MBATV 14
PC58
.1u/50V-X7R
MBAT+
PL7
FBMH4532681-7
MBAT
MTEMPV
JP3
BAT_CONN
PD28
ZD5.6V
PC116
47P
PR107
0
PC114
47P
PR106
0
PR108
10K/F
PC118
.01U
14 MTEMPV
MBCLK 2,14
MBDATA 2,14
PD27
ZD5.6V
PD26
ZD5.6V
IVSEN
PC9
.1u/50V-X7R
PR26
47K
PR34
47K
PR40
7.5K/F
PR35
182K/F
PR29
47K
PR37
47K
PU3B
LM339
PU3A
LM339
PR38
22K
OSC 200kHz
PC20
220P
PR33
10K
PC18
4700P
PR39
10K
PC22
.01U
PC7
1000P
PR22
100K
PR20
4.7K
PU3C
LM339
PU3D
LM339
14 CC-SET
PC19
.1u/50V-X7R
PR21
7.5K/F
REF5V
REF5V 14
PR24
115K/F
CV-SET 14
PC17
.1u/50V-X7R
PR17
60.4K/D
14 ACIN
PR13
10K
VAD
PD1
ZD15V
PR16
10K
AC
PQ2
2N7002E
VIN
PQ53
IMD2
14 REFON
REFP 14
REFP
PC119
.1u/50V-X7R
PU11
REF-02
NC
IN
TEMP
GND
NC
NC
OUT
TRIM
REF5V
REF5V 14
PC120
.1U
PC3
1u/50V-X7R
PC65
.1u/50V-X7R
PC63
.1u/50V-X7R
PROJECT :EF4
Quanta Computer Inc.
Size
Document Number
BATTERY CHARGER
Rev
1A
Date: Wednesday, January 07, 2004
Sheet 34 of 34