Doc No: 921F342002

# 258KA0

| | | | |
|---|---|---|---|
| 01 | COVER PAGE | 36 | CPUCORE _MAX1937 |
| 02 | GPIO DEFINITION & POWER CONSUMPTION | 37 | PB NS87391&COM&LPT |
| 03 | BLOCK DIAGRAM | 38 | PB CRT&ADIN CONN&SW&LED |
| 04 | POWER DIADRAM & SEQUENCE | 39 | PB +3V_AUX&+5V_AUX&+12V |
| 05 | CPU-ATHLON64-HT | 40 | PB ADAPTOR & BATTERY SELECT |
| 06 | CPU-ATHLON64-DDR | 41 | CDROM_TRANSFER_BD |
| 07 | CPU-ATHLON64-PWR & GND | 42 | CHANGE NOTICE |
| 08 | MAIN CLOCK & PCB HOLE | | |
| 09 | DDR (SO-DIMM) CONN | | |
| 10 | DDR PULL UP TERMINATION | | |
| 11 | SIS755(HOST & AGP) | | |
| 12 | SIS755 MUTIOL & HW TRAP | | |
| 13 | SIS755 POWER & GND | | |
| 14 | M11P-1 MOBILITY,BIOS,MCLK | | |
| 15 | M11P-2 MOBILITY MEMORY | | |
| 16 | M11P-1 MOBILITY POWER | | |
| 17 | DDR_4*32 Channel-A Bank#1 | | |
| 18 | DDR_4*32 Channel-A Bank#2 | | |
| 19 | DDR_4*32 Channel-B Bank#1 | | |
| 20 | DDR_4*32 Channel-B Bank#2 | | |
| 21 | TV & LVDS & INVERTER & PANNEL | | |
| 22 | SIS963L (HYPERZIP & PCI & IDE ) | | |
| 23 | SIS963L(HOST,AC97,MII,GPIO) | | |
| 24 | SIS963L(POWER &USB & 1394) | | |
| 25 | HDD & CD-ROM & USB CONN | | |
| 26 | LAN(PHY) & MDC CONN & SMART POWER | | |
| 27 | IEEE1394 PHY & MINI_PCI | | |
| 28 | CARDBUS OZ711M1 & MMC | | |
| 29 | AUDIO CODEC & AMP & SPK & MIC | | |
| 30 | SW&LED&IR&FAN&I/O CONN | | |
| 31 | NS87551& BIOS | | |
| 32 | VCC SWITCH&BATT CONTROL | | |
| 33 | Charger | | |
| 34 | +2.5V_DIMM & +1.25V_DDR & +1.2V | | |
| 35 | 1.8V_AUX & AGPVDD | | |

**258KA0 REV:B**

**P/N: 37-UF3000-00B**

**MADE IN TAIWAN** P1~P36

P/N = 35-UF3000-00B
POWER/B REV=B P37~40

P/N = 35-UD7020-01 ~~35-UF4000-00B~~ 吳大星定
CD-ROM/B REV=~~B~~01 P41

股份有限公司
FEB 11 2004
機密/發行
資料中心

RD1 吳大星定 02.10.2004

UNIWILL COMPUTER CORP.

Title: COVER PAGE

Size | Document Number: 258KA0 | Rev: B

Date: Tuesday, February 10, 2004 | Sheet 1 of 42

## SIS963L GPIO

| | |
|---|---|
| GPIO0 | NC |
| GPIO1 | NC |
| GPIO2 | THERMTRIP# |
| GPIO3 | EXTSMI# |
| GPIO4 | CLKRUN# |
| GPIO5 | HDD/CDROM_RST# |
| GPIO6 | NC |
| GPIO7 | NC |
| GPIO8 | PNLSW2 |
| GPIO9 | PNLSW0 |
| GPIO10 | PNLSW1 |
| GPIO11 | NC |
| GPIO12 | NC |
| GPIO13 | NC |
| GPIO14 | S3AUXSW# |
| GPIO15 | NC |
| GPIO16 | NC |
| GPIO17 | NC |
| GPIO18 | 32KHZ |
| GPIO19 | SMBCLK |
| GPIO20 | SMBDAT |

## NS87551 GPIO

| | |
|---|---|
| IOPA0 | SUS_SKIP |
| IOPA1 | BTL_BEEP |
| IOPA2 | +1.8V_ON |
| IOPA3 | NC |
| IOPA4 | PWROK_CPUEC |
| IOPA5 | NC |
| IOPA6 | +3V_ON |
| IOPA7 | S3_ON |
| IOPB0 | PWRBTN# |
| IOPB1 | PWROK1 |
| IOPB2 | MUTE# |
| IOPB3 | SMBCLK_EC |
| IOPB4 | SMBDAT_EC |
| IOPB5 | NC |
| IOPB6 | NC |
| IOPB7 | M_DIS_BAT |
| IOPC0 | LAN_DISABLE |
| IOPC1 | SMBCLK_T |
| IOPC2 | SMBDAT_T |
| IOPC3 | S3AUXSW# |
| IOPC4 | PSON# |
| IOPC5 | CHG_LED# |
| IOPC6 | SUS_LED# |
| IOPC7 | LANLED# |
| IOPD0 | NC |
| IOPD1 | NC |
| IOPD2 | PCIRST# |
| IOPD3 | SCI# |
| IOPD4 | PWR_LED# |
| IOPD5 | CAPLED# |
| IOPD6 | NUMLED# |
| IOPD7 | SCROLED# |
| IOPE0 | WWW# |
| IOPE1 | E_MAIL# |
| IOPE2 | LANSW# |
| IOPE3 | PME# |
| IOPE4 | PWRSW |
| IOPE5 | ADAP_IN |
| IOPE6 | TEMP |
| IOPE7 | NC |
| IOPF0 | NC |
| IOPF1 | NC |
| IOPF2 | NC |
| IOPF3 | NC |
| IOPF4 | TPCK |
| IOPF5 | TPDAT |
| IOPF6 | NC |
| IOPF7 | NC |
| IOPH0 | ROMA0 |
| IOPH1 | ROMA1 |
| IOPH2 | ROMA2 |
| IOPH3 | ROMA3 |
| IOPH4 | ROMA4 |
| IOPH5 | ROMA5 |
| IOPH6 | ROMA6 |
| IOPH7 | ROMA7 |

## NS87551 GPIO

| | |
|---|---|
| IOPI0 | ROMD0 |
| IOPI1 | ROMD1 |
| IOPI2 | ROMD2 |
| IOPI3 | ROMD3 |
| IOPI4 | ROMD4 |
| IOPI5 | ROMD5 |
| IOPI6 | ROMD6 |
| IOPI7 | ROMD7 |
| IOPJ0 | ROMRD# |
| IOPJ1 | ROMWR0# |
| IOPJ2 | ROMWR1# |
| IOPJ3 | NC |
| IOPJ4 | NC |
| IOPJ5 | NC |
| IOPJ6 | NC |
| IOPJ7 | NC |
| IOPK0 | ROMA8 |
| IOPK1 | ROMA9 |
| IOPK2 | ROMA10 |
| IOPK3 | ROMA11 |
| IOPK4 | ROMA12 |
| IOPK5 | ROMA13 |
| IOPK6 | ROMA14 |
| IOPK7 | ROMA15 |
| IOPL0 | ROMA16 |
| IOPL1 | ROMA17 |
| IOPL2 | ROMA18 |
| IOPL3 | NC |
| IOPL4 | LCDSW |
| IOPM0 | +1.2V_ON |
| IOPM1 | +2.5V_DIMM_ON |
| IOPM2 | CHG_ON |
| IOPM3 | LID# |
| IOPM4 | PAGE_UP# |
| IOPM5 | PAGE_DN# |
| IOPM6 | CORE_ON |
| IOPM7 | NC |
| AD0 | MB_ID |
| AD1 | I_CPU |
| AD2 | V_CPU |
| AD3 | STOP_CHG# |
| AD4 | |
| AD5 | |
| AD6 | |
| AD7 | |
| AD8 | THERMDA_EC |
| AD9 | THERMDC_EC |
| | |
| DA0 | BRIGHTADJ |
| DA1 | SET_I |
| DA2 | FAN_CTRL1 |
| DA3 | FAN_CTRL0 |

## CPU

| | CPU CORE(V) | ICC(mA) | W | TEMP(℃) |
|---|---|---|---|---|
| 2.0G | 1.525 | | | |
| 2.2G | 1.525 | | | |
| 2.26G | 1.525 | | | |
| 2.4G | 1.525 | | | |
| 2.5G | 1.525 | | | |
| 2.53G | 1.525 | | | |
| 2.6G | 1.525 | | | |
| 2.66G | 1.525 | | | |
| 2.8G | 1.525 | | | |
| 3.06G | 1.525 | | | |

## SIS755

| VCC | ICC(mA) | W | TEMP(℃) |
|---|---|---|---|
| +3V | 100.2 | 0.4575 | 70 |
| +1.2V | 88 | 0.1056 | |
| +1.8V | 2208.2 | 2.1261 | |
| AGPVDD | 401.7 | 0.5107 | |
| | | | |
| | | | |
| | | | |

## SIS963L

| VCC | ICC(mA) | W | TEMP(℃) |
|---|---|---|---|
| +3V | 96 | 0.315 | 70 |
| +1.8V | 487 | 0.876 | |
| +1.8V_AUX | 27 | 0.049 | |
| +3V_AUX | 275 | 0.909 | |
| RTCVDD | 0.003 | 0.00001 | |
| VTT(+1.8V) | 15 | 0.027 | |

## PC87551

| VCC | ICC(mA) | W | TEMP(℃) |
|---|---|---|---|
| +3V | 300 | 1 | 70 |

## PC87383

| VCC | ICC(mA) | W | TEMP(℃) |
|---|---|---|---|
| +3V | 50 | 0.165 | 70 |

## CLOCK GENERATOR

| VCC | ICC(mA) | W | TEMP(℃) |
|---|---|---|---|
| +3V | 180 | 0.594 | 70 |

## RTL8201CL

| VCC | ICC(mA) | W | TEMP(℃) |
|---|---|---|---|
| +3V | 200 | 0.66 | 70 |

## ALC655

| VCC | ICC(mA) | W | TEMP(℃) |
|---|---|---|---|
| +3V(DVDD) | 71 | 0.234 | 70 |
| +3V(AMPVDD) | 36 | 0.118 | |

## ADM1032

| VCC | ICC | W | TEMP(℃) |
|---|---|---|---|
| +3V | 170uA | 0.56mW | 150 |

## OZ711MC1

| VCC | ICC(mA) | W | TEMP(℃) |
|---|---|---|---|
| +3V | 30 | 0.1 | 70 |

UNIWILL COMPUTER CORP.

Title: GPIO DEFINITION & POWER CONSUMPTION

Size | Document Number: 258KA0 | Rev B

Date: Tuesday, February 10, 2004 | Sheet 2 of 42

# 258AA0 BLOCK DIAGRAM

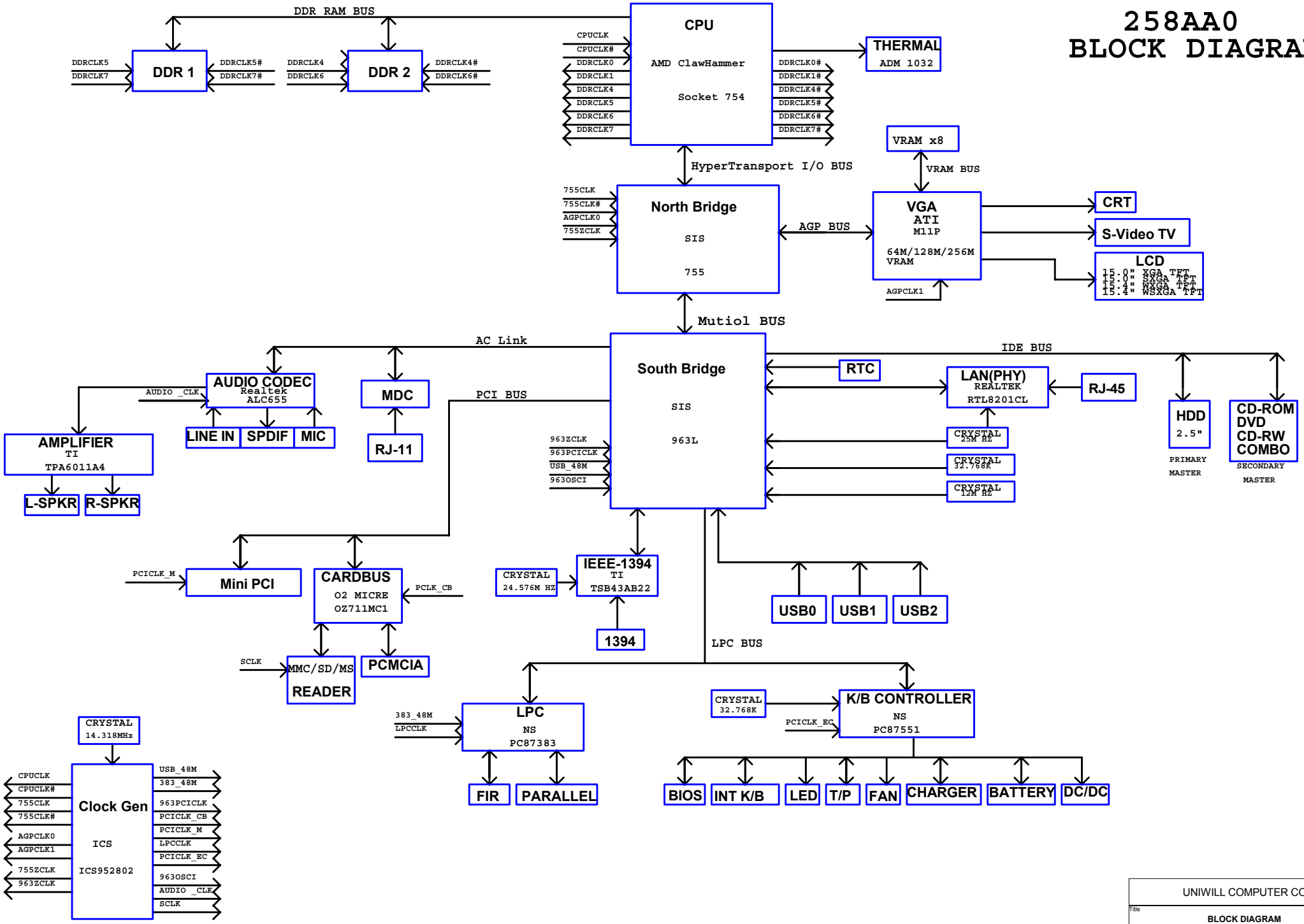


| | |
|---|---|
| UNIWILL COMPUTER CORP. | |
| Title | BLOCK DIAGRAM |
| Size | Document Number 258KA0 Rev B |
| Date: Tuesday, February 10, 2004 | Sheet 3 of 42 |

# POWER BLOCK DIAGRAM

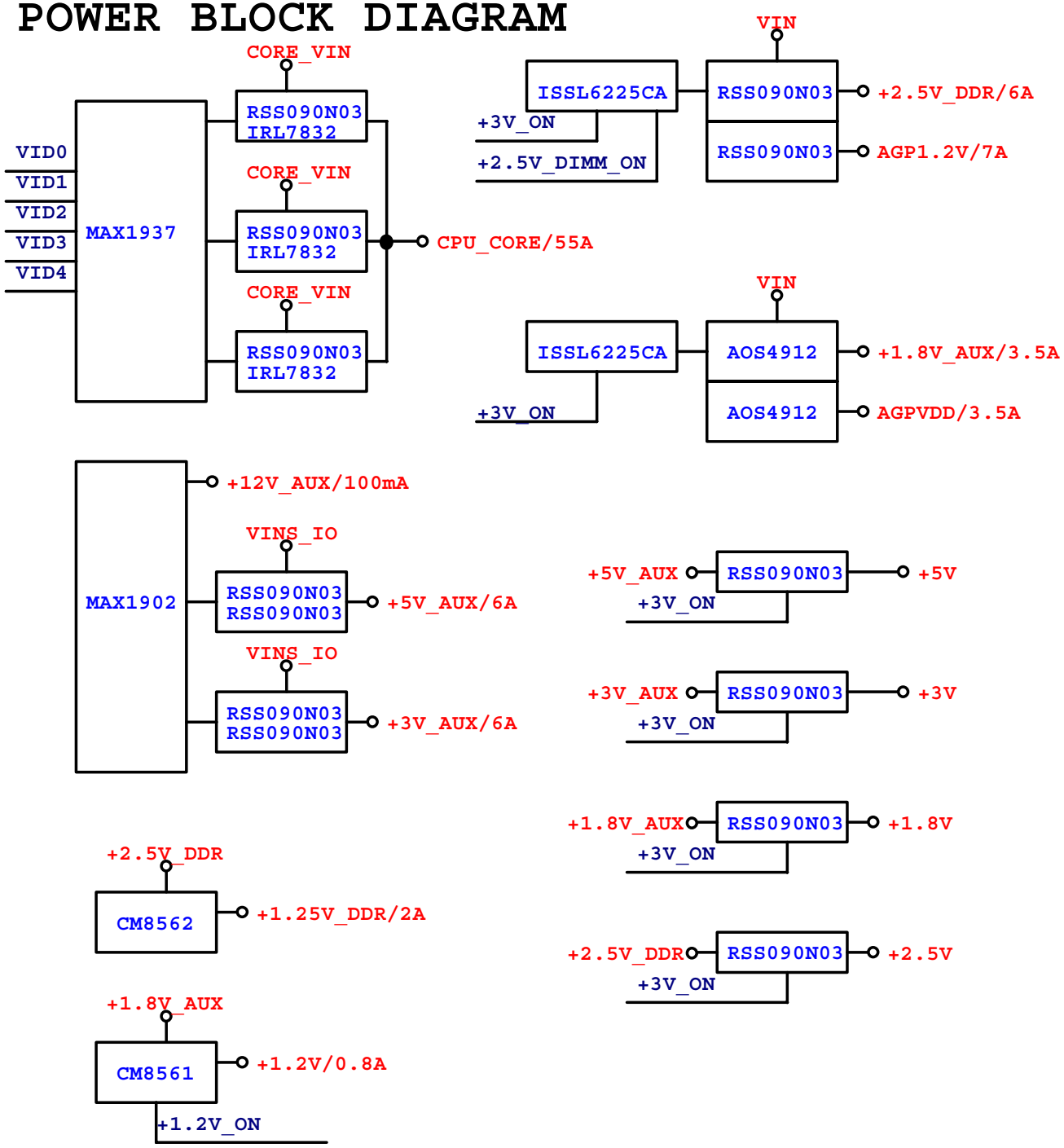


# POWER ON SEQUENCE

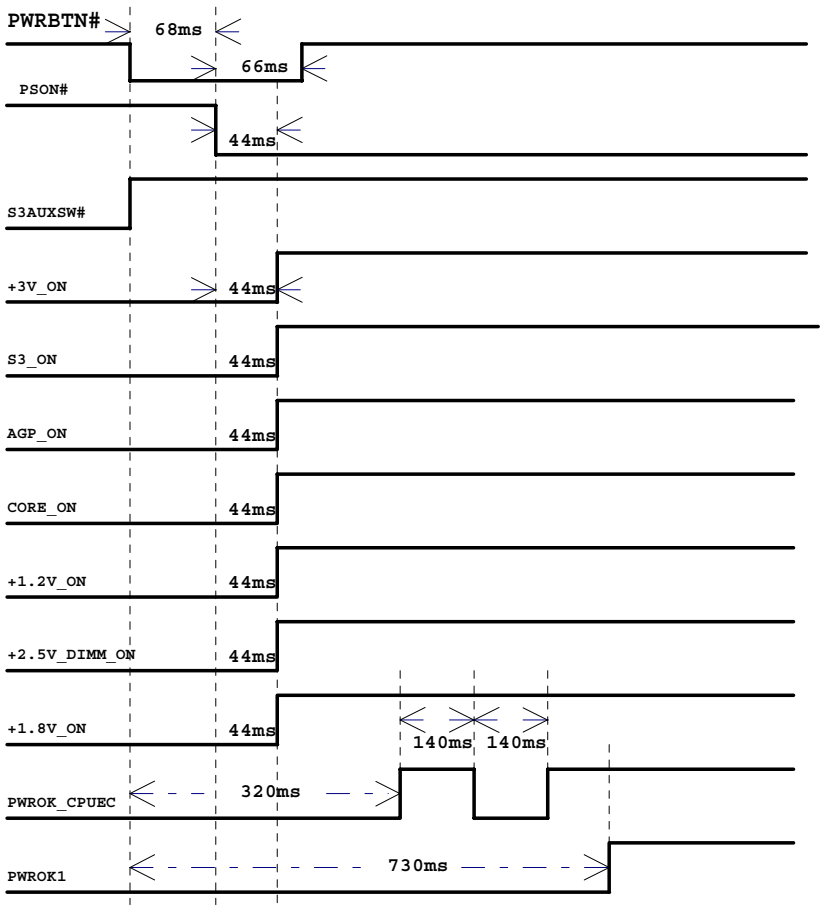


| | |
|---|---|
| UNIWILL COMPUTER CORP. | |
| Title | POWER DIAGRAM & SEQUENCE |
| Size / Document Number | 258KA0 |
| Rev | B |
| Date: Tuesday, February 10, 2004 | Sheet 4 of 42 |

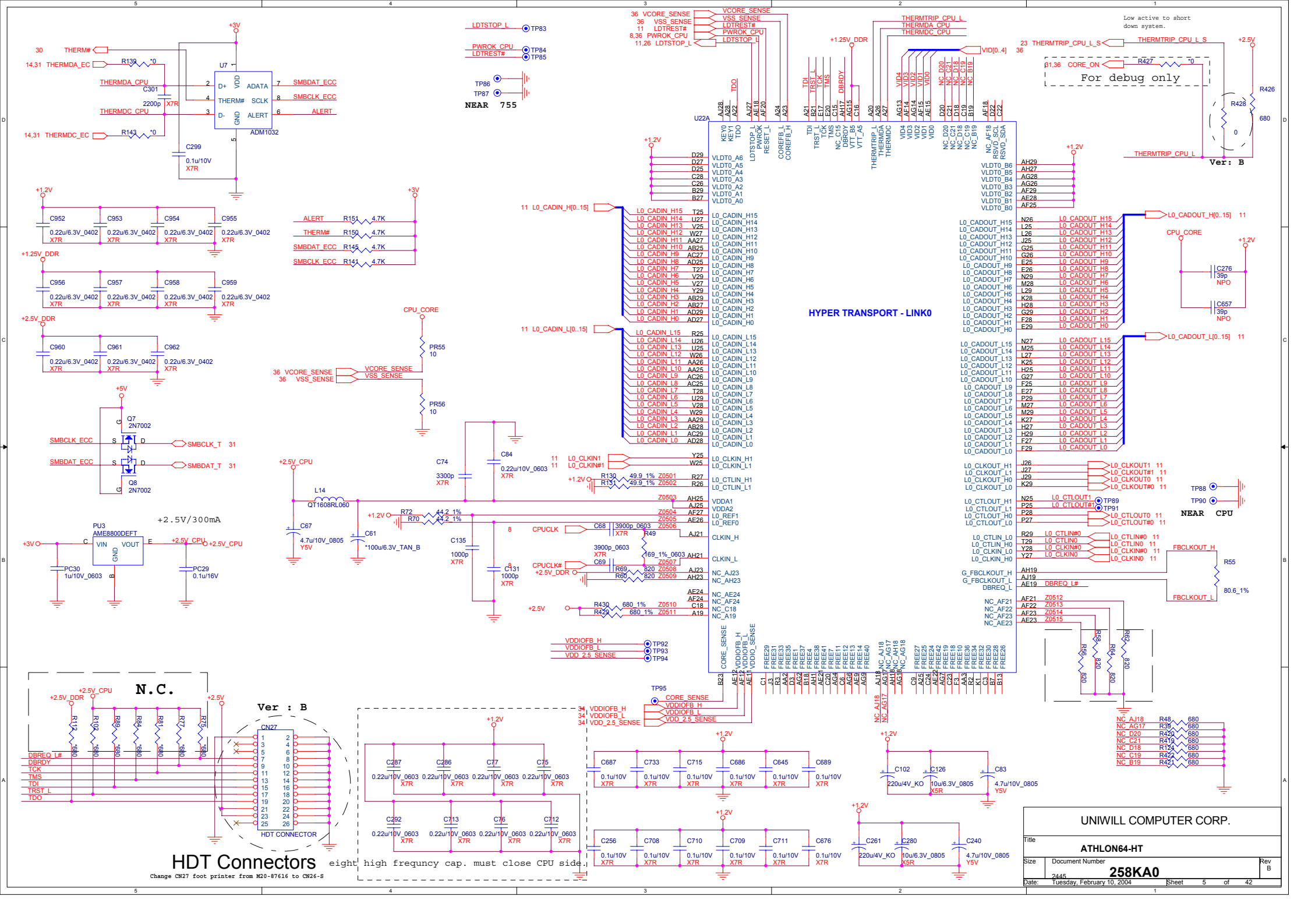
HYPER TRANSPORT - LINK0
U22A
U7
ADM1032
THERM#
THERMDA_CPU
THERMDC_CPU
SMBDAT_ECC
SMBCLK_ECC
ALERT
THERMDA_EC
THERMDC_EC
LDTSTOP_L
PWROK_CPU
LDTREST#
VCORE_SENSE
VSS_SENSE
THERMTRIP_CPU_L
THERMTRIP_CPU_L_S
CORE_ON
For debug only
Low active to short down system.
Ver: B
NEAR 755
NEAR CPU
PU3
AME8800DEFT
+2.5V/300mA
Q7
2N7002
Q8
2N7002
L14
QT1608RL060
CPUCLK
CPUCLK#
L0_CADIN_H[0..15]
L0_CADIN_L[0..15]
L0_CADOUT_H[0..15]
L0_CADOUT_L[0..15]
L0_CLKIN1
L0_CLKIN#1
L0_CLKOUT1
L0_CLKOUT#1
L0_CLKOUT0
L0_CLKOUT#0
L0_CTLOUT1
L0_CTLOUT#1
L0_CTLOUT0
L0_CTLOUT#0
L0_CTLIN#0
L0_CTLIN0
L0_CLKIN#0
L0_CLKIN0
FBCLKOUT_H
FBCLKOUT_L
DBREQ_L#
VDDIOFB_H
VDDIOFB_L
VDD_2.5_SENSE
CORE_SENSE
N.C.
Ver : B
CN27
HDT CONNECTOR
HDT Connectors
Change CN27 foot printer from M20-87616 to CN26-S
eight high frequncy cap. must close CPU side.
UNIWILL COMPUTER CORP.
Title
ATHLON64-HT
Size
Document Number
258KA0
Rev
B
Date: Tuesday, February 10, 2004
Sheet 5 of 42

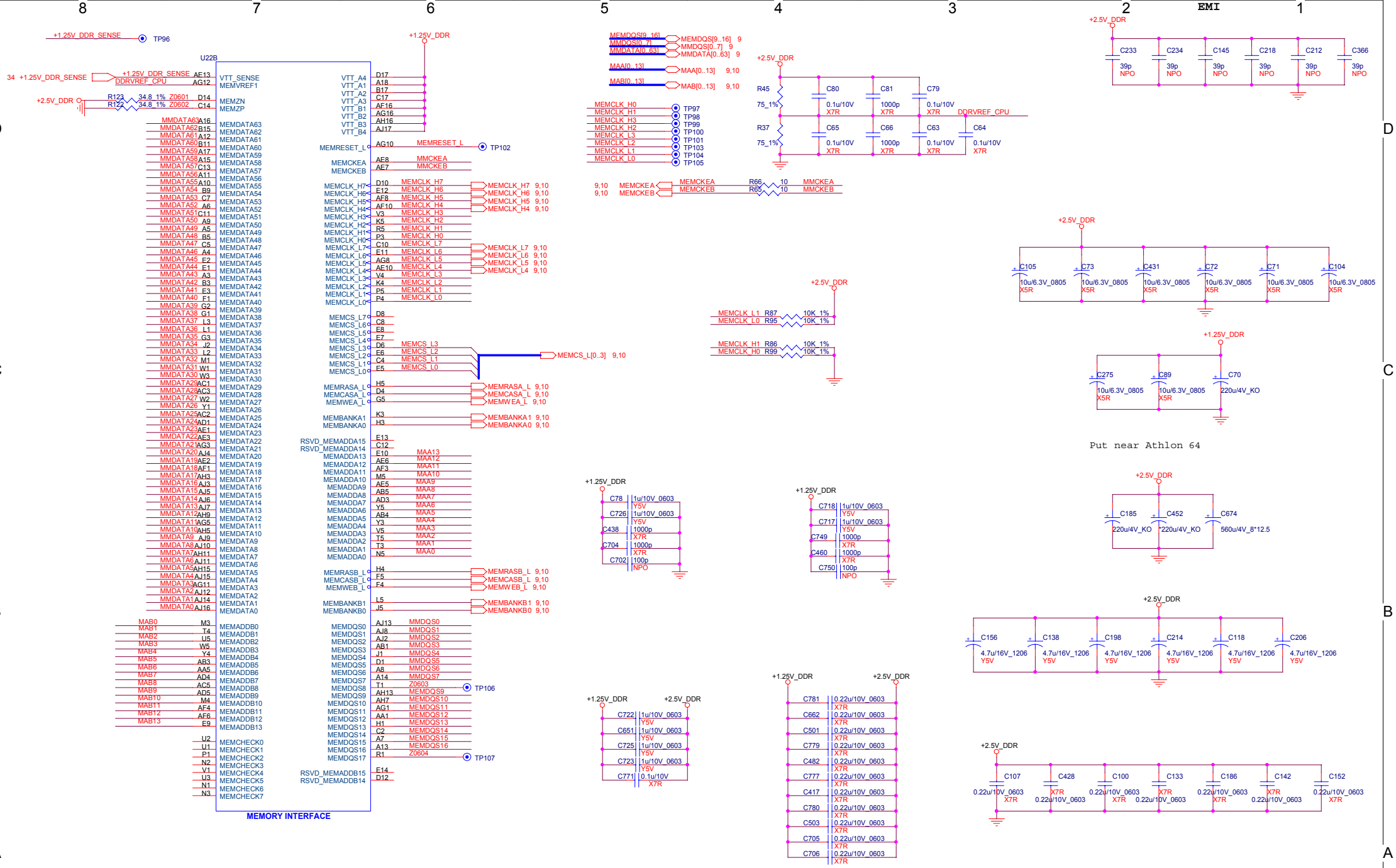


| | |
|---|---|
| UNIWILL COMPUTER CORP. | |
| Title | ATHLON64-DDR |
| Size | Document Number 258KA0 |
| Rev | B |
| Date: Tuesday, February 10, 2004 | Sheet 6 of 42 |

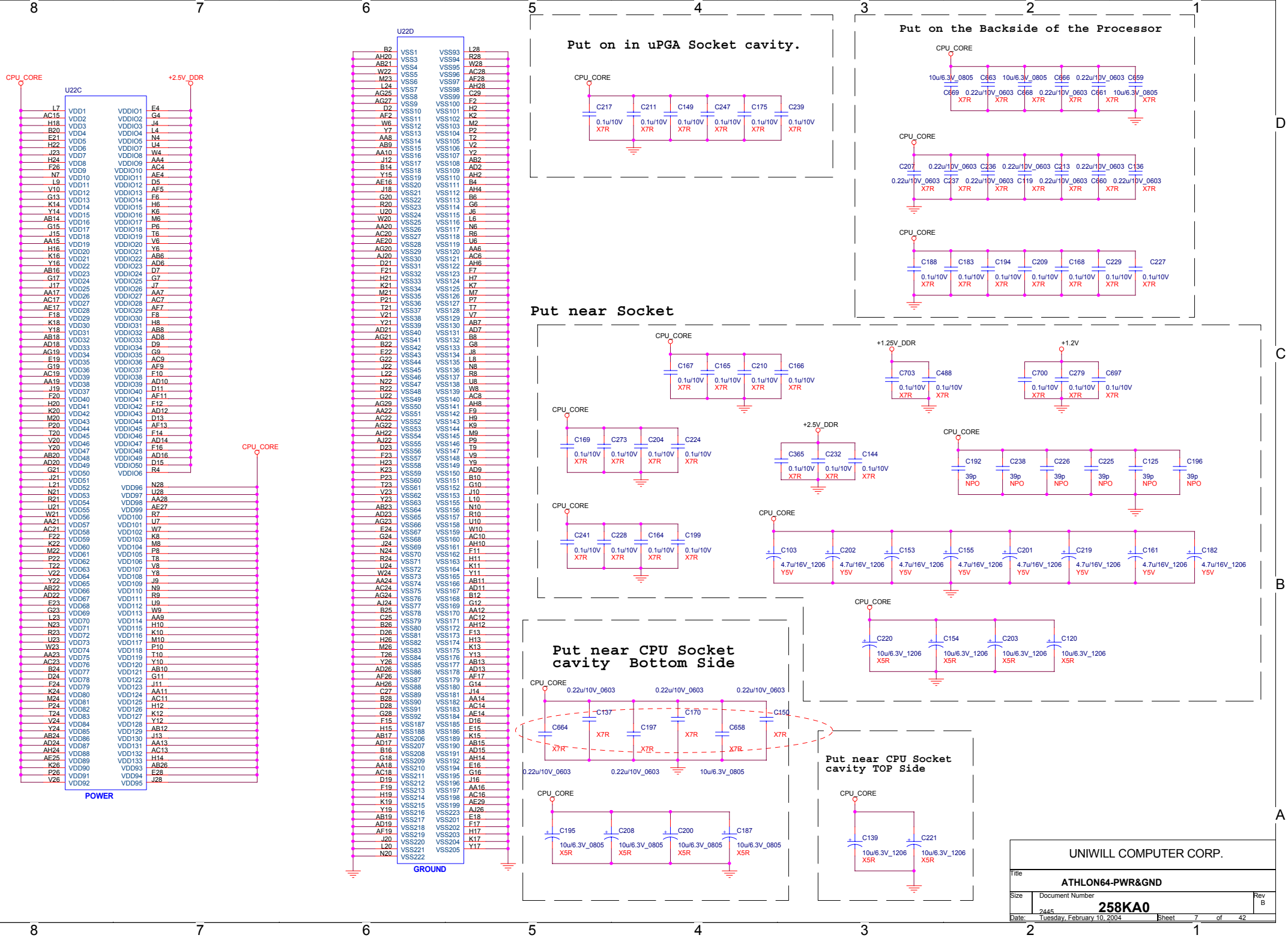


UNIWILL COMPUTER CORP.

Title: ATHLON64-PWR&GND

Size: 2445 | Document Number: 258KA0 | Rev: B

Date: Tuesday, February 10, 2004 | Sheet 7 of 42

# Main Clock Generator

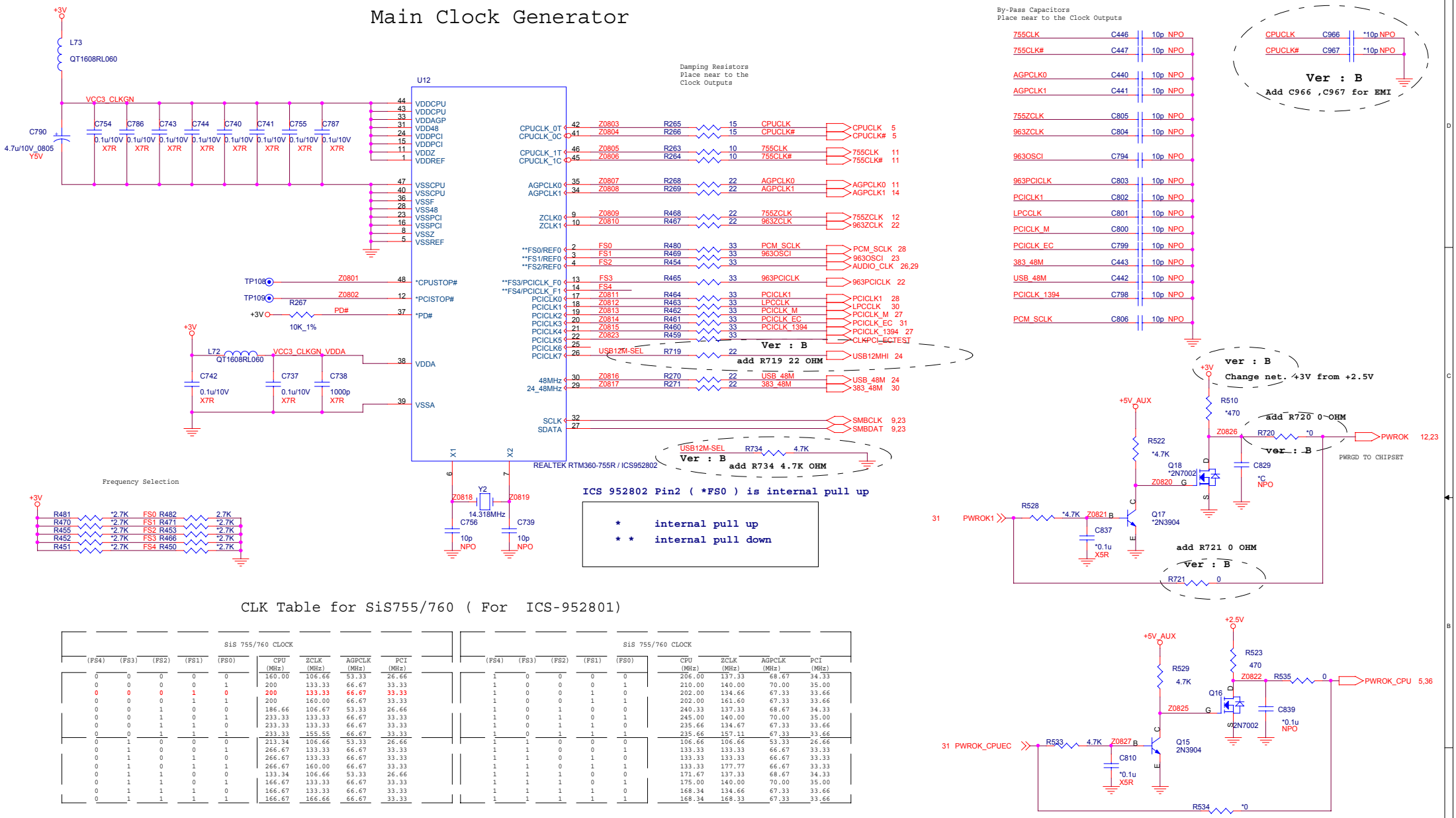


## CLK Table for SiS755/760 ( For ICS-952801)

| SiS 755/760 CLOCK | | | | | | | | |
|---|---|---|---|---|---|---|---|---|
| (FS4) | (FS3) | (FS2) | (FS1) | (FS0) | CPU (MHz) | ZCLK (MHz) | AGPCLK (MHz) | PCI (MHz) |
| 0 | 0 | 0 | 0 | 0 | 160.00 | 106.66 | 53.33 | 26.66 |
| 0 | 0 | 0 | 0 | 1 | 200 | 133.33 | 66.67 | 33.33 |
| 0 | 0 | 0 | 1 | 0 | 200 | 133.33 | 66.67 | 33.33 |
| 0 | 0 | 0 | 1 | 1 | 200 | 160.00 | 66.67 | 33.33 |
| 0 | 0 | 1 | 0 | 0 | 186.66 | 106.67 | 53.33 | 26.66 |
| 0 | 0 | 1 | 0 | 1 | 233.33 | 133.33 | 66.67 | 33.33 |
| 0 | 0 | 1 | 1 | 0 | 233.33 | 133.33 | 66.67 | 33.33 |
| 0 | 0 | 1 | 1 | 1 | 233.33 | 155.55 | 66.67 | 33.33 |
| 0 | 1 | 0 | 0 | 0 | 213.34 | 106.66 | 53.33 | 26.66 |
| 0 | 1 | 0 | 0 | 1 | 266.67 | 133.33 | 66.67 | 33.33 |
| 0 | 1 | 0 | 1 | 0 | 266.67 | 133.33 | 66.67 | 33.33 |
| 0 | 1 | 0 | 1 | 1 | 266.67 | 160.00 | 66.67 | 33.33 |
| 0 | 1 | 1 | 0 | 0 | 133.34 | 106.66 | 53.33 | 26.66 |
| 0 | 1 | 1 | 0 | 1 | 166.67 | 133.33 | 66.67 | 33.33 |
| 0 | 1 | 1 | 1 | 0 | 166.67 | 133.33 | 66.67 | 33.33 |
| 0 | 1 | 1 | 1 | 1 | 166.67 | 166.66 | 66.67 | 33.33 |

| SiS 755/760 CLOCK | | | | | | | | |
|---|---|---|---|---|---|---|---|---|
| (FS4) | (FS3) | (FS2) | (FS1) | (FS0) | CPU (MHz) | ZCLK (MHz) | AGPCLK (MHz) | PCI (MHz) |
| 1 | 0 | 0 | 0 | 0 | 206.00 | 137.33 | 68.67 | 34.33 |
| 1 | 0 | 0 | 0 | 1 | 210.00 | 140.00 | 70.00 | 35.00 |
| 1 | 0 | 0 | 1 | 0 | 202.00 | 134.66 | 67.33 | 33.66 |
| 1 | 0 | 0 | 1 | 1 | 202.00 | 161.60 | 67.33 | 33.66 |
| 1 | 0 | 1 | 0 | 0 | 240.33 | 137.33 | 68.67 | 34.33 |
| 1 | 0 | 1 | 0 | 1 | 245.00 | 140.00 | 70.00 | 35.00 |
| 1 | 0 | 1 | 1 | 0 | 235.66 | 134.67 | 67.33 | 33.66 |
| 1 | 0 | 1 | 1 | 1 | 235.66 | 157.11 | 67.33 | 33.66 |
| 1 | 1 | 0 | 0 | 0 | 106.66 | 106.66 | 53.33 | 26.66 |
| 1 | 1 | 0 | 0 | 1 | 133.33 | 133.33 | 66.67 | 33.33 |
| 1 | 1 | 0 | 1 | 0 | 133.33 | 133.33 | 66.67 | 33.33 |
| 1 | 1 | 0 | 1 | 1 | 133.33 | 177.77 | 66.67 | 33.33 |
| 1 | 1 | 1 | 0 | 0 | 171.67 | 137.33 | 68.67 | 34.33 |
| 1 | 1 | 1 | 0 | 1 | 175.00 | 140.00 | 70.00 | 35.00 |
| 1 | 1 | 1 | 1 | 0 | 168.34 | 134.66 | 67.33 | 33.66 |
| 1 | 1 | 1 | 1 | 1 | 168.34 | 168.33 | 67.33 | 33.66 |

H8 HOLEC314D157 · H5 HOLEC314D157 · H26 HOLEC314D86 · H16 HOLEC314D106 · H19 HOLEC314D106 · H28 HOLEC314D86 · H34 HOLEC314D181 · H33 HOLEC314D181 · H25 HOLEC314D106 · H20 HOLEC314D106 · H29 HOLEC217D106

H11 HOLEC314D106 · H14 HOLEC314D157 · H27 HOLEC314D86 · H23 HOLEC314D157 · H24 HOLEC314D157 · H17 HOLEC314D106 · H18 HOLEC217D106 · H35 HOLEC314D181 · H36 HOLEC314D181 · H21 HOLEC314D106 · H22 HOLEC314D106 · H2 C158D158 · H15 C158D158 · H6 C158D158 · H30 C158D158

UNIWILL COMPUTER CORP.

Title: CLOCK GENERATOR & PCB HOLE

Size: 2445 | Document Number: 258KA0 | Rev: B

Date: Tuesday, February 10, 2004 | Sheet 8 of 42

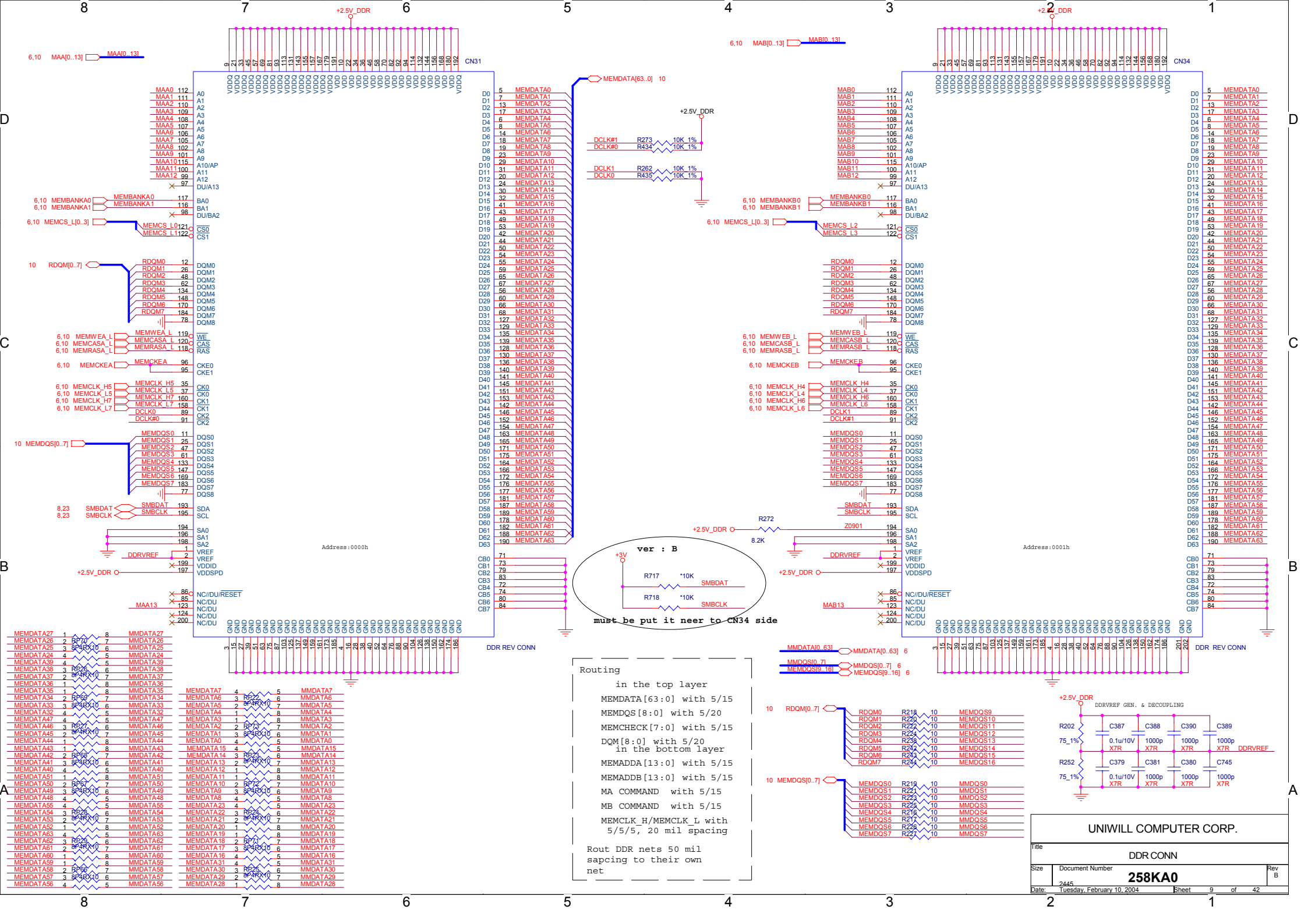
CN31
CN34
DDR REV CONN
Address:0000h
Address:0001h
ver : B
must be put it neer to CN34 side
Routing
in the top layer
MEMDATA[63:0] with 5/15
MEMDQS[8:0] with 5/20
MEMCHECK[7:0] with 5/15
DQM[8:0] with 5/20
in the bottom layer
MEMADDA[13:0] with 5/15
MEMADDB[13:0] with 5/15
MA COMMAND with 5/15
MB COMMAND with 5/15
MEMCLK_H/MEMCLK_L with 5/5/5, 20 mil spacing
Rout DDR nets 50 mil sapcing to their own net
DDRVREF GEN. & DECOUPLING
UNIWILL COMPUTER CORP.
Title
DDR CONN
Size
Document Number
258KA0
Rev
B
Date: Tuesday, February 10, 2004
Sheet 9 of 42

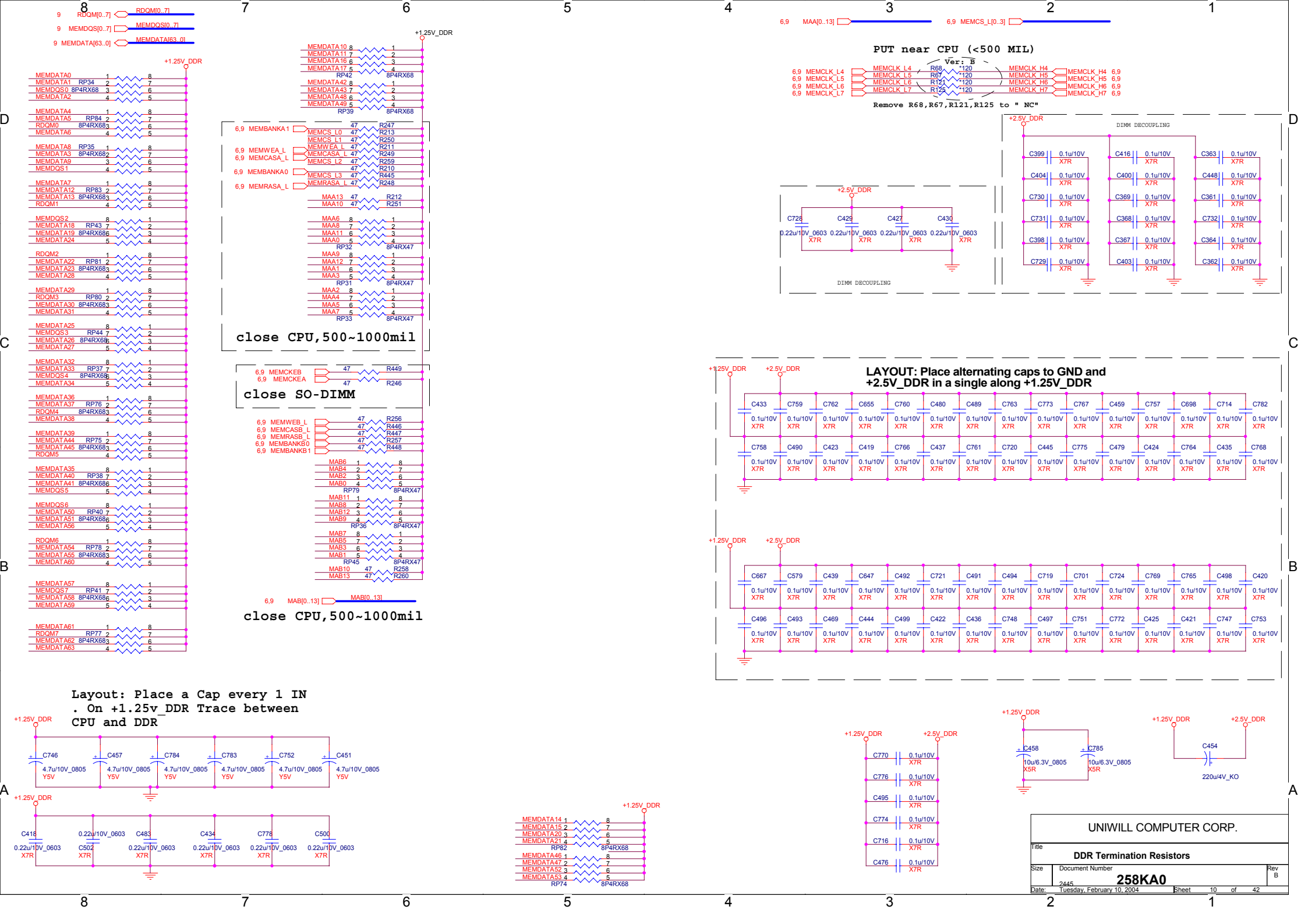
PUT near CPU (<500 MIL)
Ver: B
Remove R68,R67,R121,R125 to " NC"
close CPU,500~1000mil
close SO-DIMM
close CPU,500~1000mil
LAYOUT: Place alternating caps to GND and +2.5V_DDR in a single along +1.25V_DDR
Layout: Place a Cap every 1 IN . On +1.25v_DDR Trace between CPU and DDR
DIMM DECOUPLING
DIMM DECOUPLING
UNIWILL COMPUTER CORP.
Title
DDR Termination Resistors
Size
Document Number
258KA0
Rev B
Date: Tuesday, February 10, 2004
Sheet 10 of 42

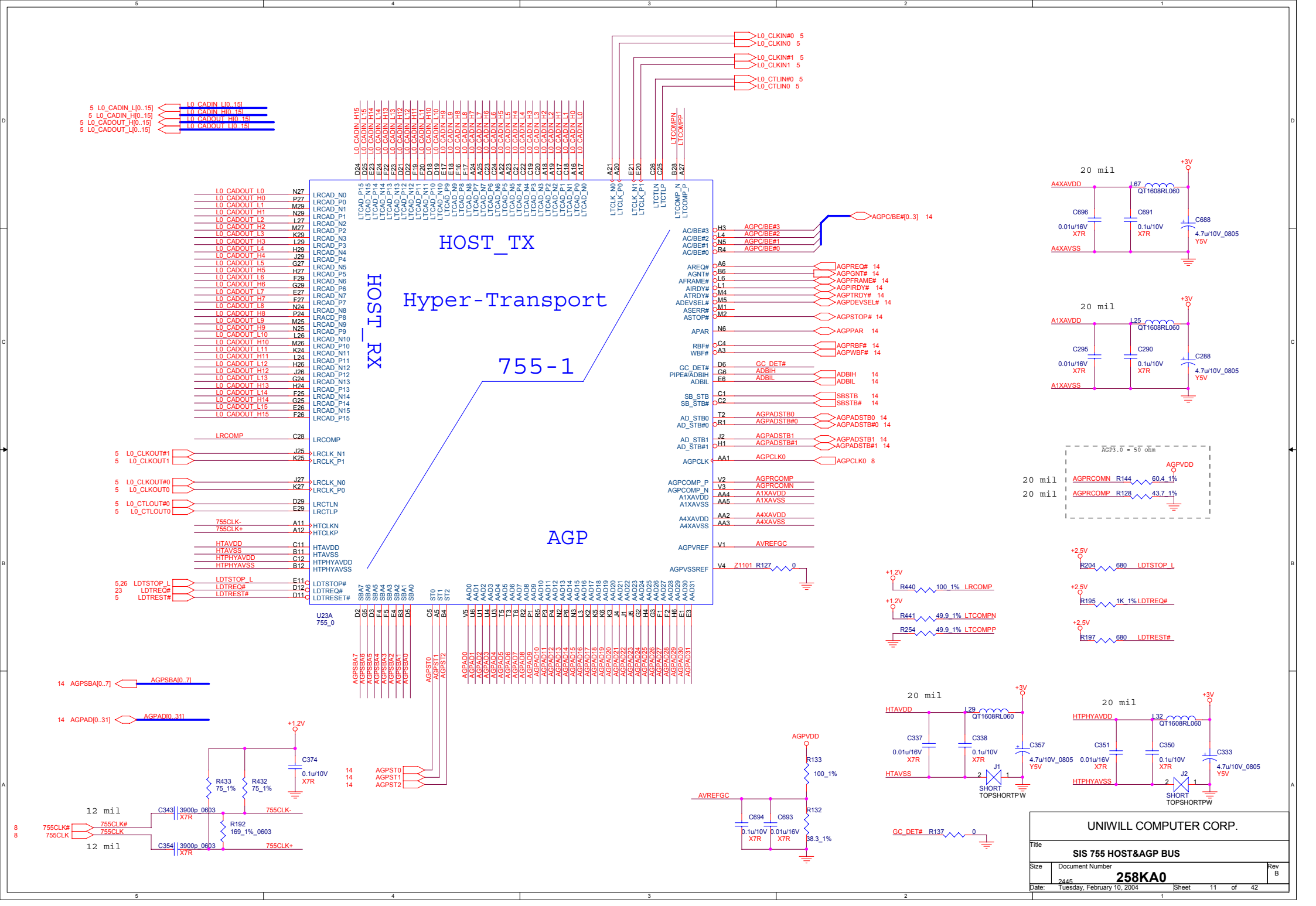
HOST_TX
Hyper-Transport
755-1
HOST_RX
AGP
U23A
755_0
LRCAD_N0
LRCAD_P0
LRCAD_N1
LRCAD_P1
LRCAD_N2
LRCAD_P2
LRCAD_N3
LRCAD_P3
LRCAD_N4
LRCAD_P4
LRCAD_N5
LRCAD_P5
LRCAD_N6
LRCAD_P6
LRCAD_N7
LRCAD_P7
LRCAD_N8
LRACD_P8
LRCAD_N9
LRCAD_P9
LRCAD_N10
LRCAD_P10
LRCAD_N11
LRCAD_P11
LRCAD_N12
LRCAD_P12
LRCAD_N13
LRCAD_P13
LRCAD_N14
LRCAD_P14
LRCAD_N15
LRCAD_P15
LRCOMP
LRCLK_N1
LRCLK_P1
LRCLK_N0
LRCLK_P0
LRCTLN
LRCTLP
HTCLKN
HTCLKP
HTAVDD
HTAVSS
HTPHYAVDD
HTPHYAVSS
LDTSTOP#
LDTREQ#
LDTRESET#
AC/BE#3
AC/BE#2
AC/BE#1
AC/BE#0
AREQ#
AGNT#
AFRAME#
AIRDY#
ATRDY#
ADEVSEL#
ASERR#
ASTOP#
APAR
RBF#
WBF#
GC_DET#
PIPE#/ADBIH
ADBIL
SB_STB
SB_STB#
AD_STB0
AD_STB#0
AD_STB1
AD_STB#1
AGPCLK
AGPCOMP_P
AGPCOMP_N
A1XAVDD
A1XAVSS
A4XAVDD
A4XAVSS
AGPVREF
AGPVSSREF
AGPCLK0
AVREFGC
AGPCOMP
AGPRCOMN
AGPRCOMP
AGPADSTB0
AGPADSTB#0
AGPADSTB1
AGPADSTB#1
AGPC/BE#[0..3]
AGPREQ#
AGPGNT#
AGPFRAME#
AGPIRDY#
AGPTRDY#
AGPDEVSEL#
AGPSTOP#
AGPPAR
AGPRBF#
AGPWBF#
ADBIH
ADBIL
SBSTB
SBSTB#
AGPSBA[0..7]
AGPAD[0..31]
AGPST0
AGPST1
AGPST2
L0_CADIN_L[0..15]
L0_CADIN_H[0..15]
L0_CADOUT_H[0..15]
L0_CADOUT_L[0..15]
L0_CLKIN#0
L0_CLKIN0
L0_CLKIN#1
L0_CLKIN1
L0_CTLIN#0
L0_CTLIN0
L0_CLKOUT#1
L0_CLKOUT1
L0_CLKOUT#0
L0_CLKOUT0
L0_CTLOUT#0
L0_CTLOUT0
755CLK-
755CLK+
LDTSTOP_L
LDTREQ#
LDTREST#
LTCOMPN
LTCOMPP
LTCLK_N0
LTCLK_P0
LTCLK_N1
LTCLK_P1
LTCTLN
LTCTLP
LTCOMP_N
LTCOMP_P
20 mil
A4XAVDD
A4XAVSS
L67
QT1608RL060
C696
0.01u/16V
X7R
C691
0.1u/10V
X7R
C688
4.7u/10V_0805
Y5V
+3V
A1XAVDD
A1XAVSS
L25
C295
C290
C288
AGP3.0 = 50 ohm
AGPVDD
AGPRCOMN R144 60.4 1%
AGPRCOMP R128 43.7 1%
R440 100 1% LRCOMP
R441 49.9 1% LTCOMPN
R254 49.9 1% LTCOMPP
+1.2V
+2.5V
R204 680 LDTSTOP_L
R195 1K 1% LDTREQ#
R197 680 LDTREST#
HTAVDD
HTAVSS
L29
C337
C338
C357
J1
SHORT
TOPSHORTPW
HTPHYAVDD
HTPHYAVSS
L32
C351
C350
C333
J2
R433
75 1%
R432
75 1%
C374
0.1u/10V
X7R
12 mil
C343
3900p_0603
X7R
C354
755CLK#
755CLK
R192
169 1%_0603
AGPVDD
R133
100 1%
R132
38.3 1%
C694
C693
AVREFGC
GC_DET# R137 0
UNIWILL COMPUTER CORP.
Title
SIS 755 HOST&AGP BUS
Size
Document Number
258KA0
Rev
B
Date: Tuesday, February 10, 2004
Sheet 11 of 42

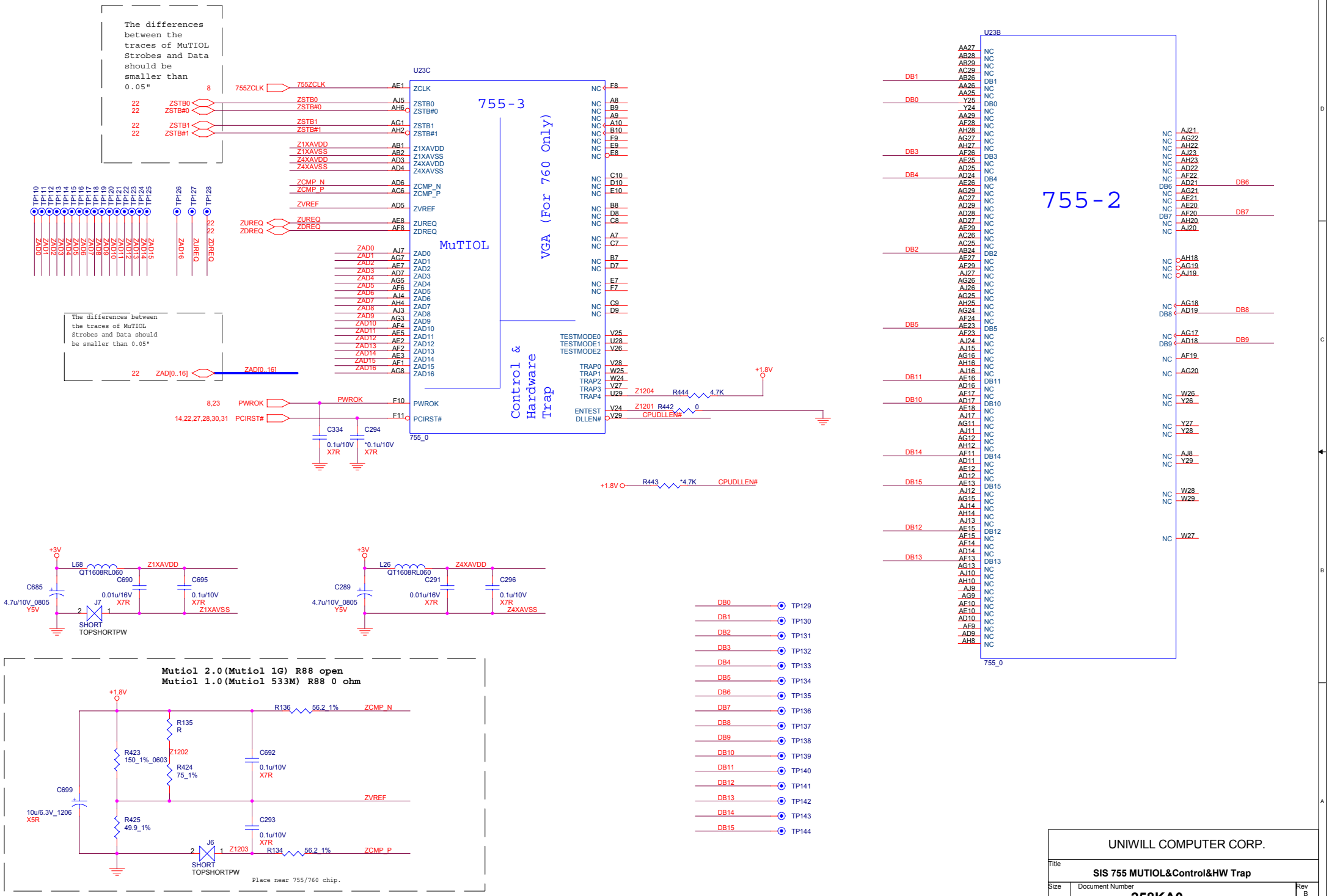


UNIWILL COMPUTER CORP.

Title: SIS 755 MUTIOL&Control&HW Trap

Size | Document Number: 258KA0 | Rev B

Date: Tuesday, February 10, 2004 | Sheet 12 of 42

LAYOUT: Place HT bypass capson
topside near connected LokalHT link.

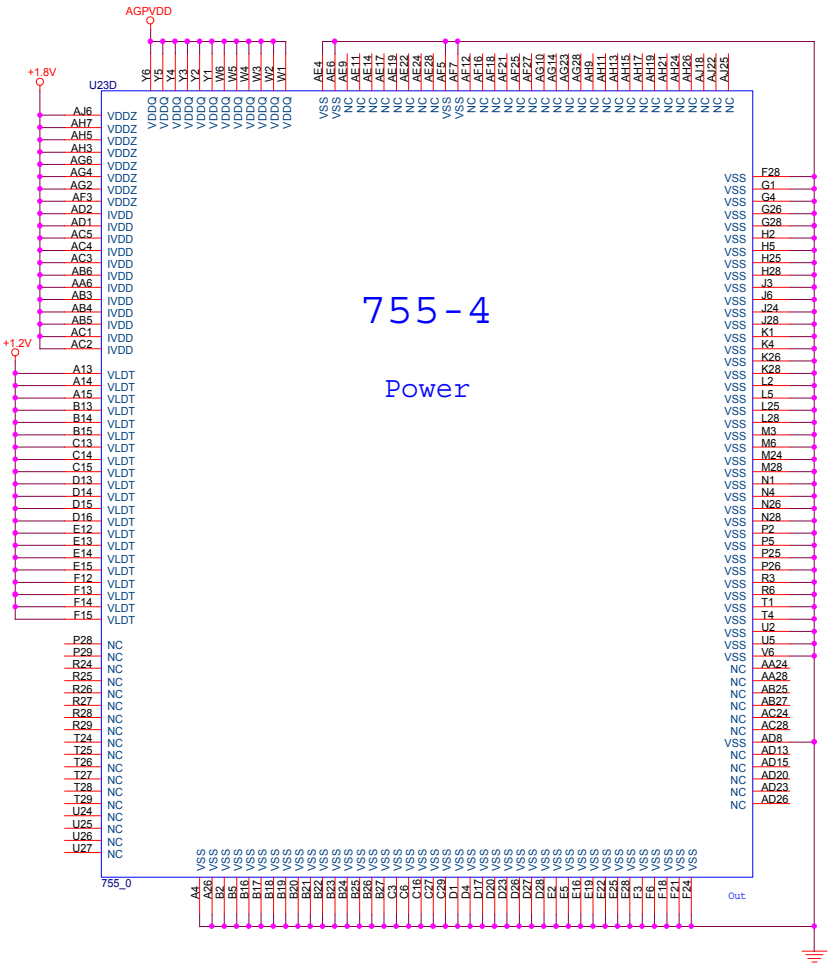


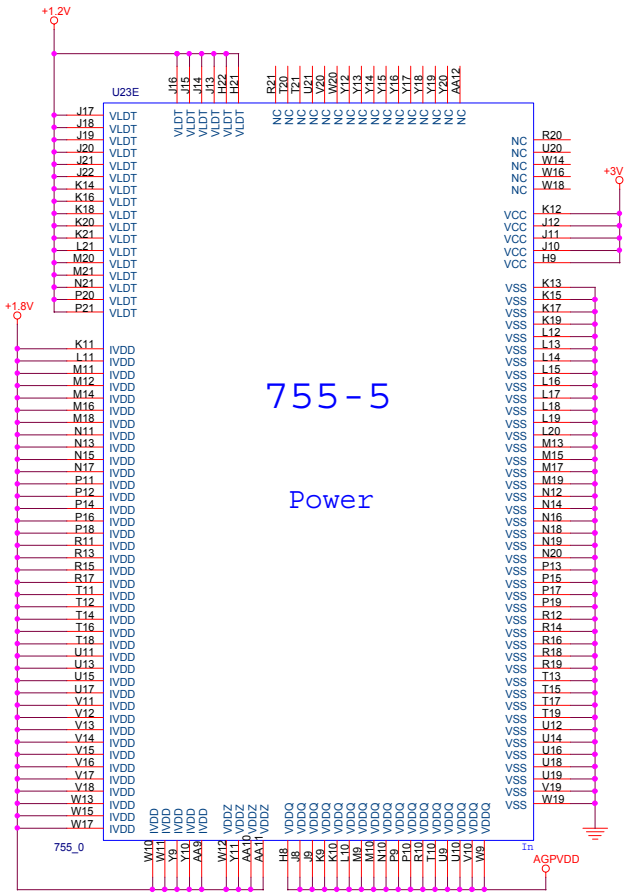


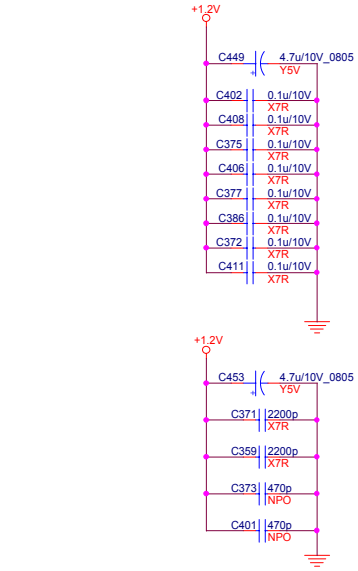


Place these capacitors under 755/760 solder side.

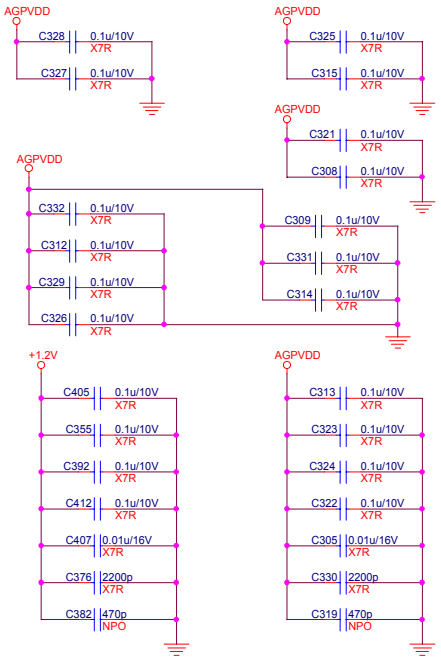


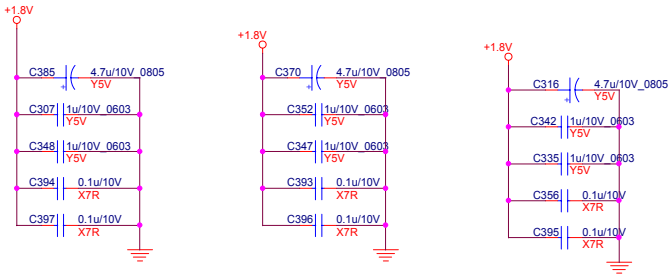


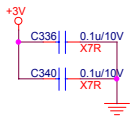


UNIWILL COMPUTER CORP.

Title: **SIS 755 PWR&GROUND**

Size: 2445 | Document Number: **258KA0** | Rev: B

Date: Tuesday, February 10, 2004 | Sheet 13 of 42

## MCLK SPREAD SPECTRUM

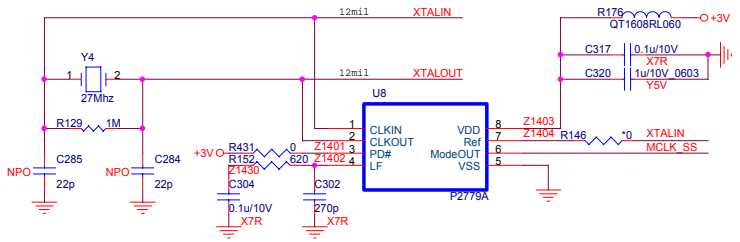


| SPREAD | C304 | C304 | R152 |
|---|---|---|---|
| +- 0.5% | 270pF | 100pF | 620 |
| +- 0.75% | 270pF | 100pF | 1K |
| +- 1% | 270pF | 6800pF | 1.2K |
| +- 1.25% | 330pF | 3300pF | 1.2K |

## THERMAL SENSOR

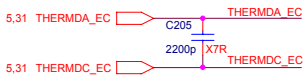


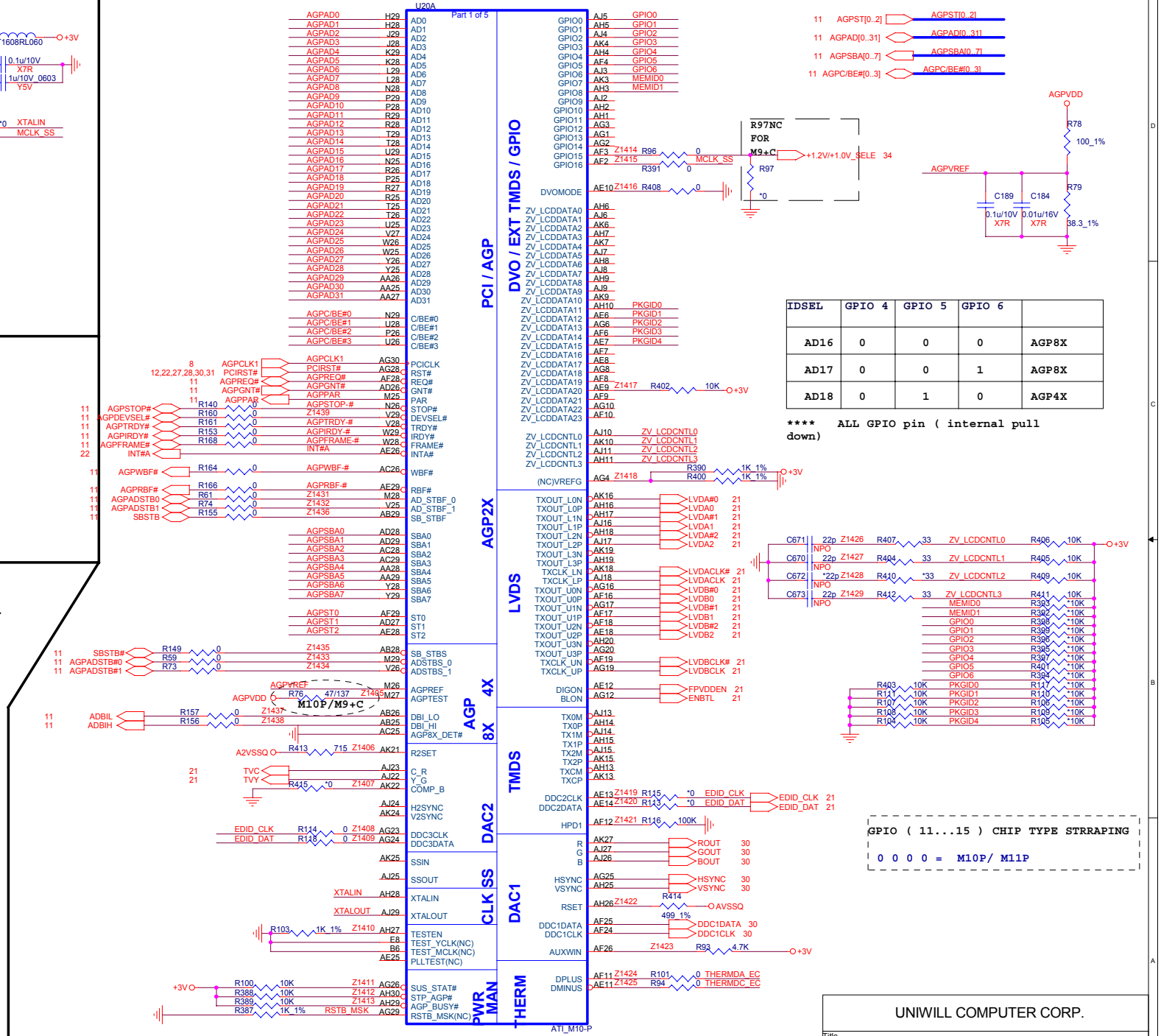


| IDSEL | GPIO 4 | GPIO 5 | GPIO 6 | |
|---|---|---|---|---|
| AD16 | 0 | 0 | 0 | AGP8X |
| AD17 | 0 | 0 | 1 | AGP8X |
| AD18 | 0 | 1 | 0 | AGP4X |

**** ALL GPIO pin ( internal pull down)

GPIO ( 11...15 ) CHIP TYPE STRRAPING

0 0 0 0 = M10P/ M11P

UNIWILL COMPUTER CORP.

Title: DDR TERMINATION & PCB HOLE

Size: 2445 | Document Number: 258KA0 | Rev: B

Date: Tuesday, February 10, 2004 | Sheet 14 of 42

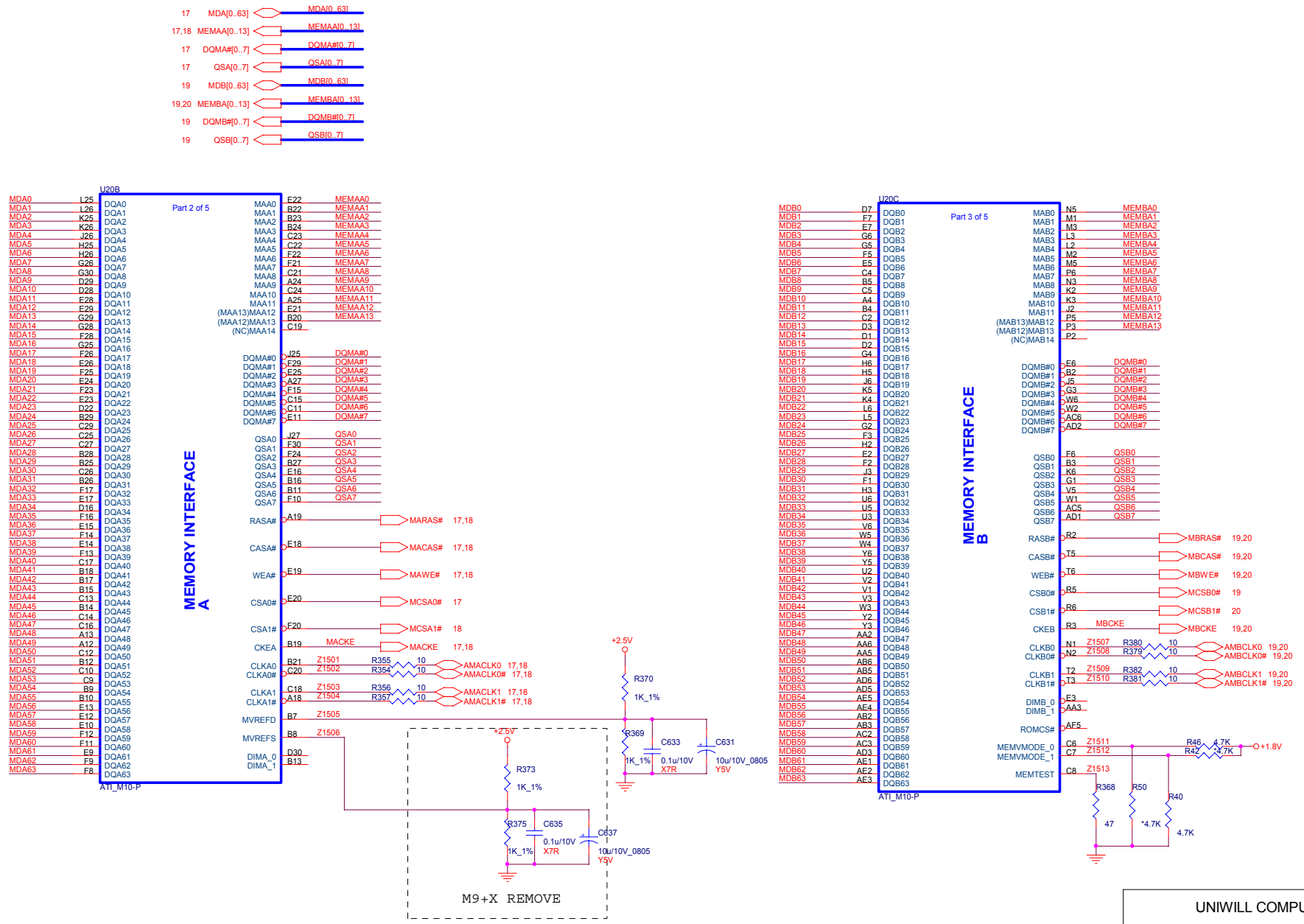


UNIWILL COMPUTER CORP.

Title: DDR TERMINATION & PCB HOLE

Size | Document Number: 258KA0 | Rev: B

Date: Tuesday, February 10, 2004 | Sheet 15 of 42

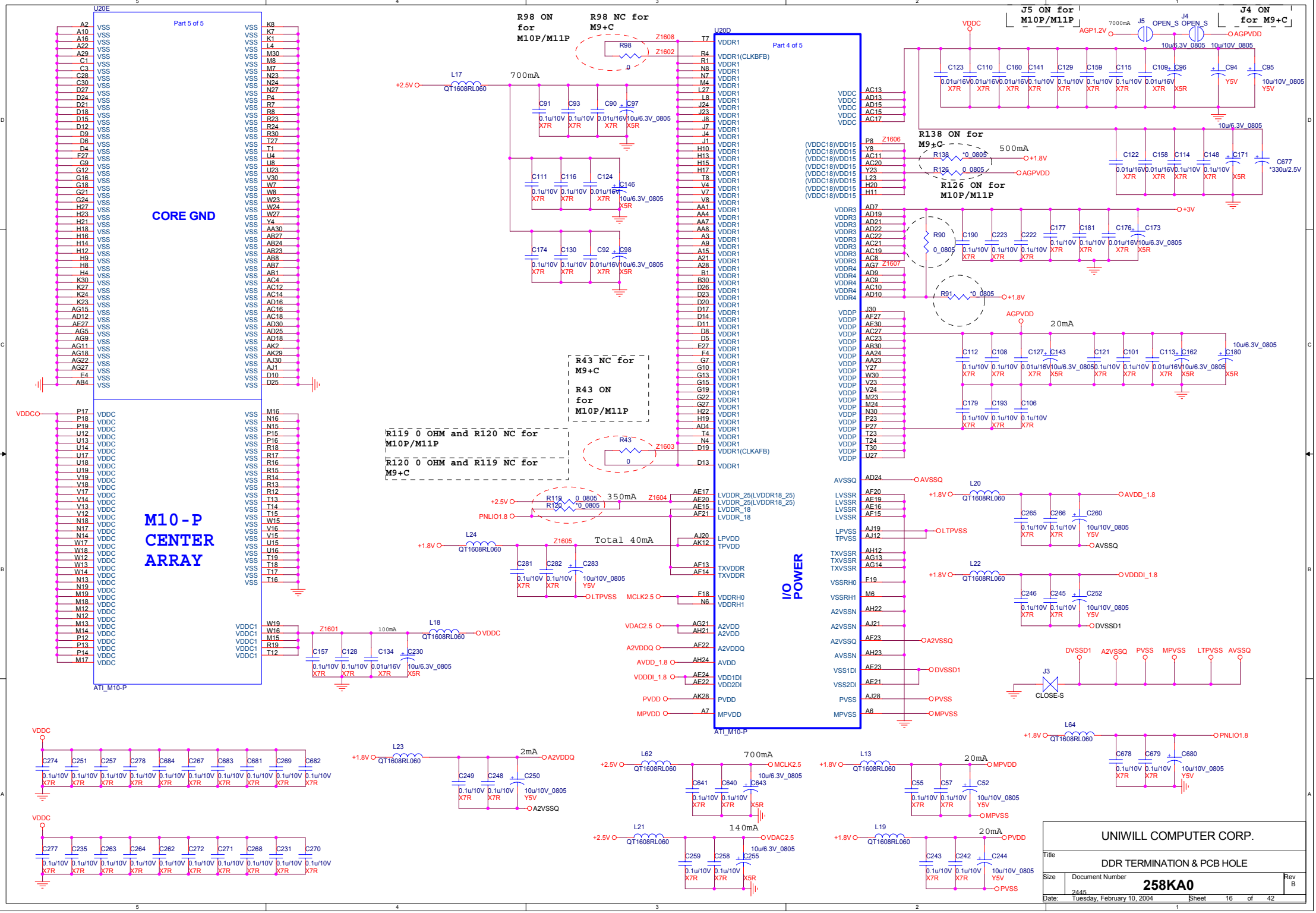
U20E
Part 5 of 5
CORE GND
M10-P
CENTER
ARRAY
ATI_M10-P
U20D
Part 4 of 5
I/O
POWER
ATI_M10-P
R98 ON for M10P/M11P
R98 NC for M9+C
R43 NC for M9+C
R43 ON for M10P/M11P
R119 0 OHM and R120 NC for M10P/M11P
R120 0 OHM and R119 NC for M9+C
J5 ON for M10P/M11P
J4 ON for M9+C
R138 ON for M9+C
R126 ON for M10P/M11P
700mA
500mA
20mA
350mA
Total 40mA
140mA
2mA
UNIWILL COMPUTER CORP.
Title
DDR TERMINATION & PCB HOLE
Size
Document Number
258KA0
Rev B
Date: Tuesday, February 10, 2004
Sheet 16 of 42

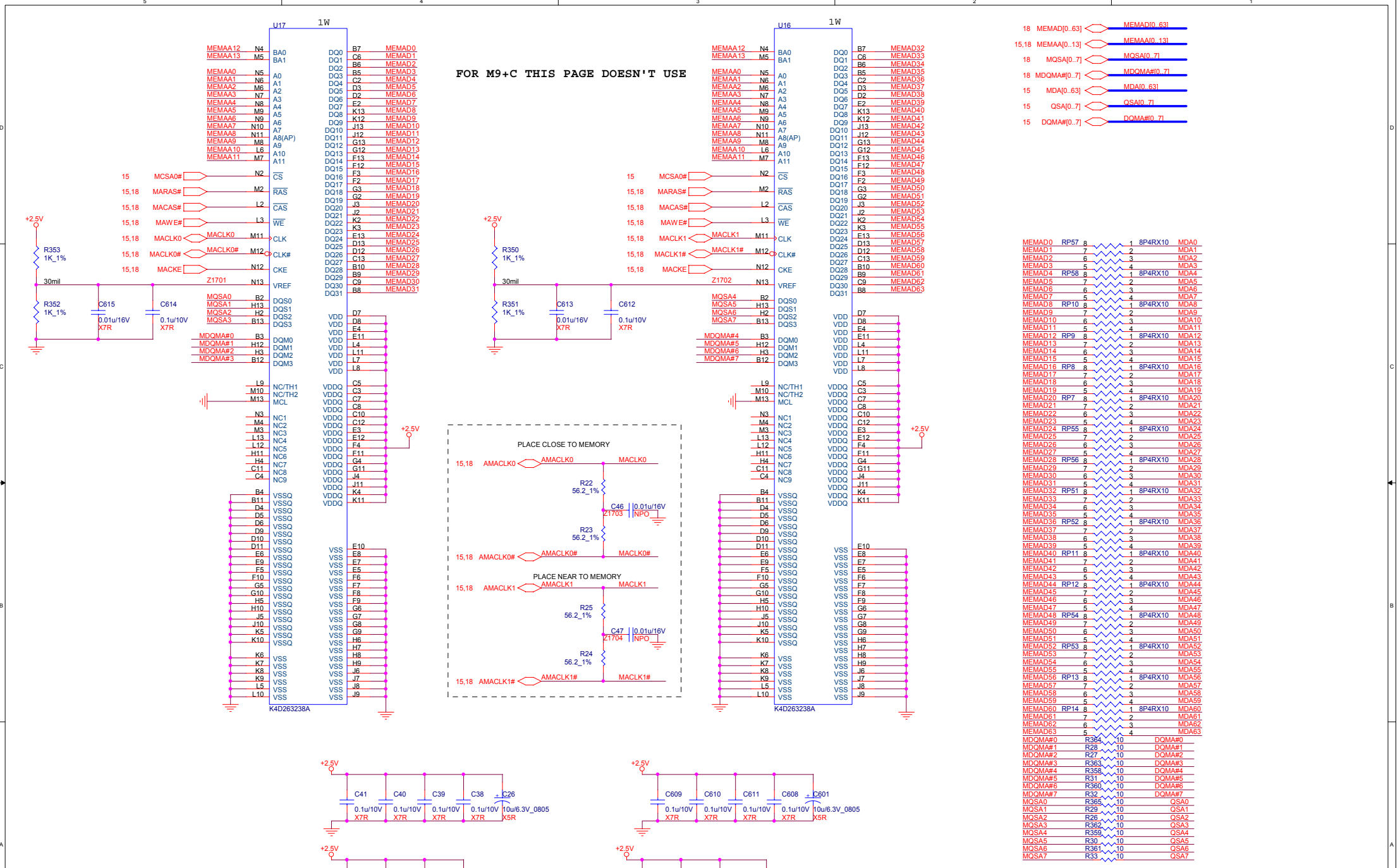


UNIWILL COMPUTER CORP.

Title: DDR TERMINATION & PCB HOLE

Size: 2445 | Document Number: 258KA0 | Rev: B

Date: Tuesday, February 10, 2004 | Sheet 17 of 42

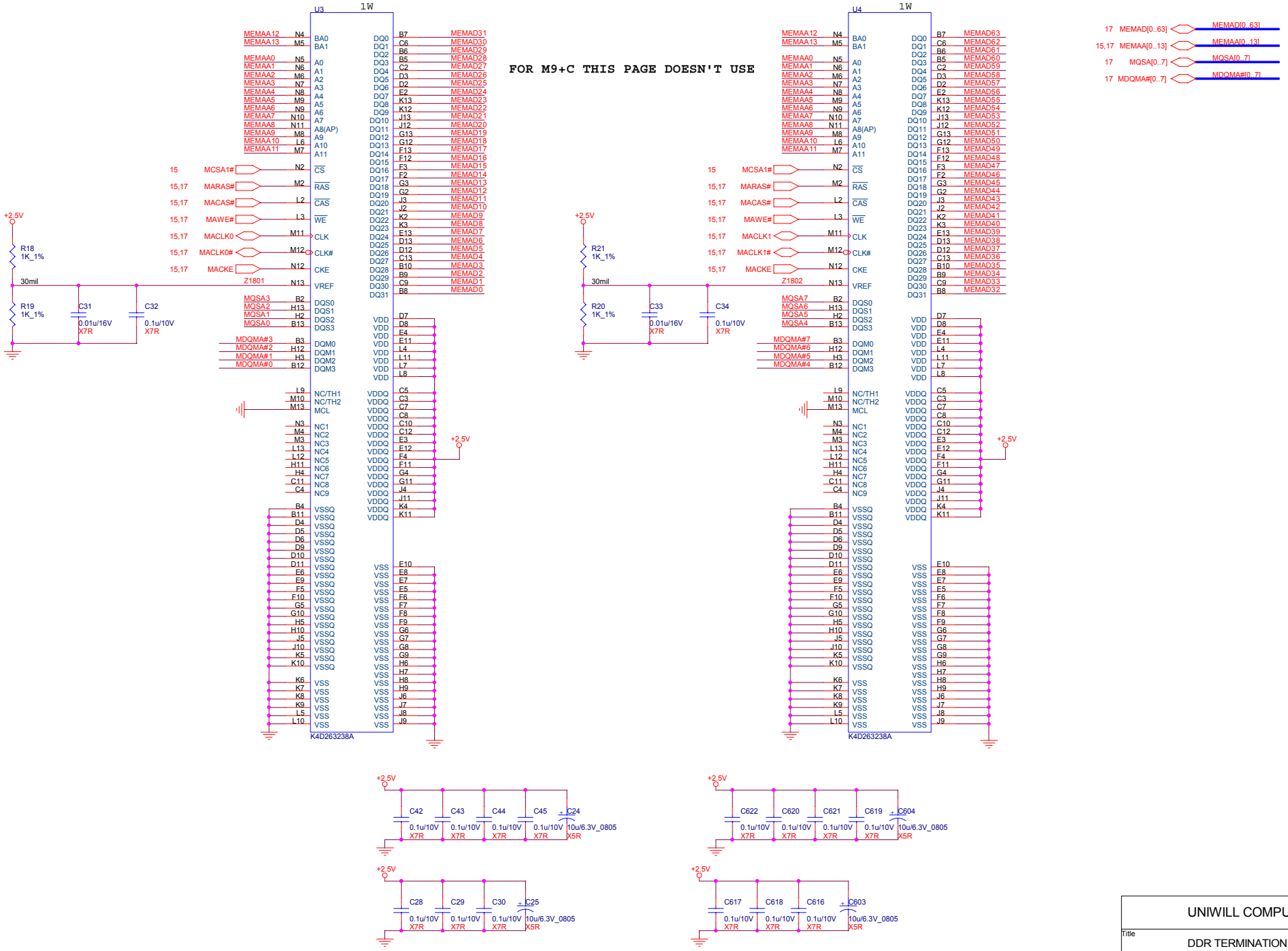


UNIWILL COMPUTER CORP.

Title: DDR TERMINATION & PCB HOLE

Size: 2445 | Document Number: 258KA0 | Rev: B

Date: Tuesday, February 10, 2004 | Sheet 18 of 42

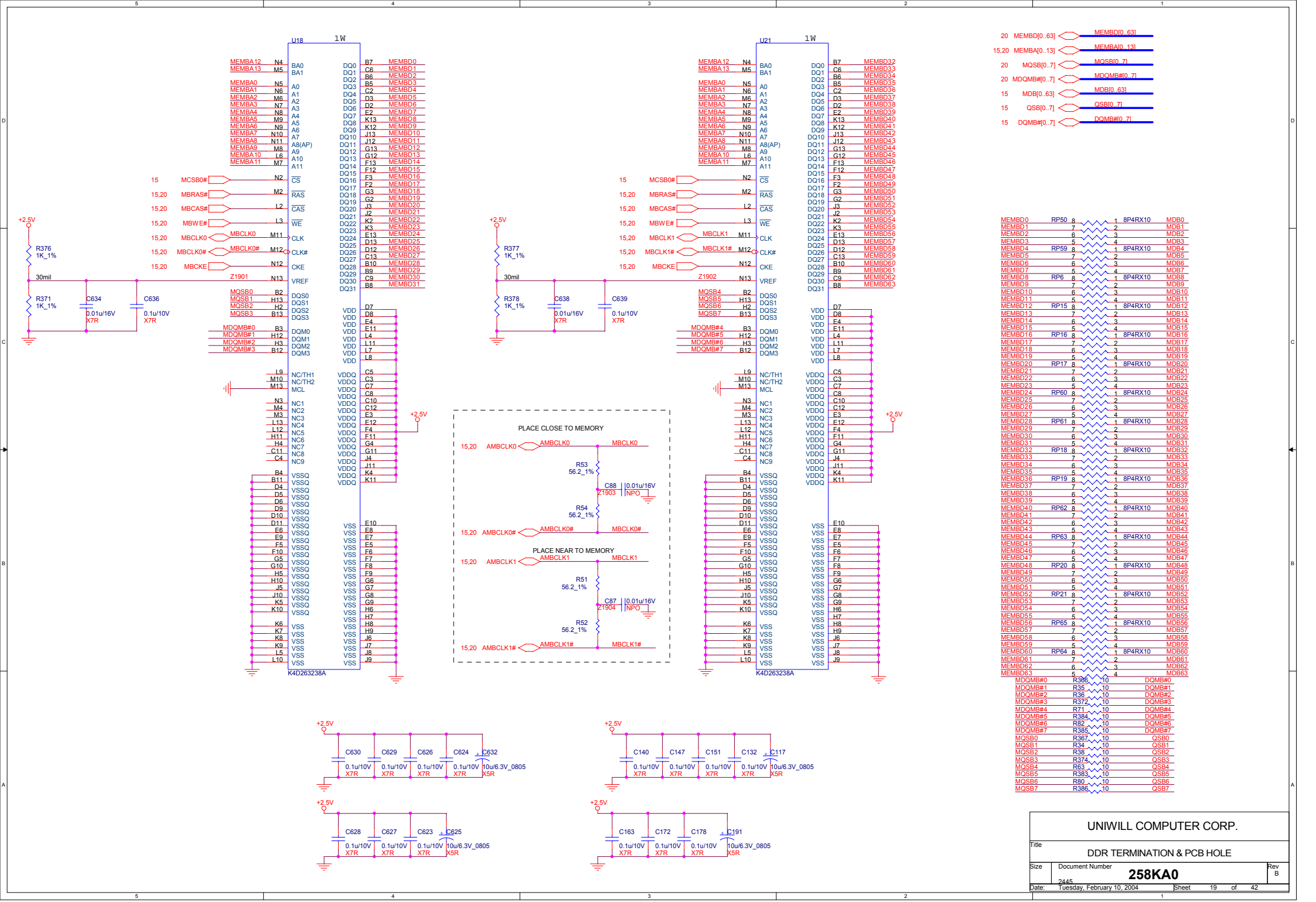


UNIWILL COMPUTER CORP.

Title: DDR TERMINATION & PCB HOLE

Size: 2445 | Document Number: 258KA0 | Rev: B

Date: Tuesday, February 10, 2004 | Sheet 19 of 42

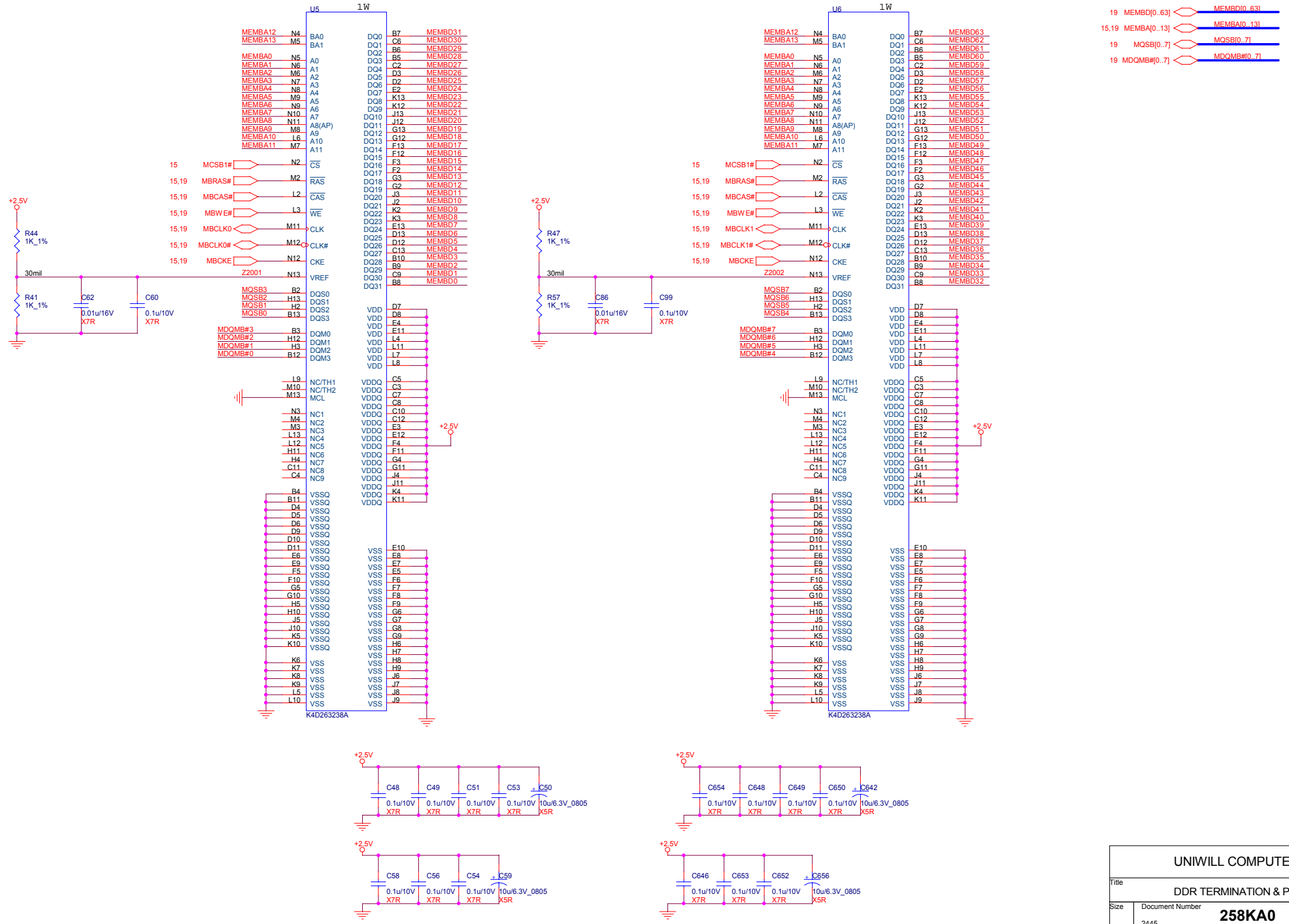


UNIWILL COMPUTER CORP.

Title: DDR TERMINATION & PCB HOLE

Size: 2445 | Document Number: 258KA0 | Rev: B

Date: Tuesday, February 10, 2004 | Sheet 20 of 42

## LCDVCC

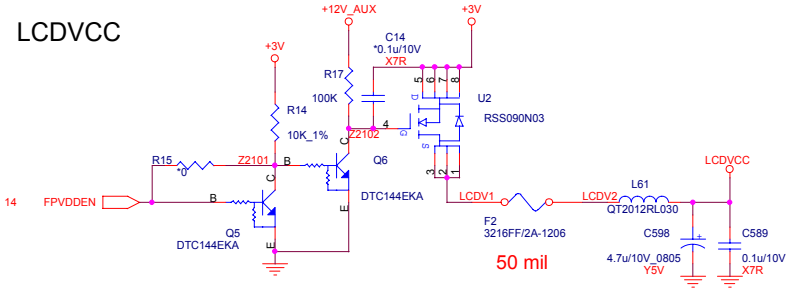


## TV

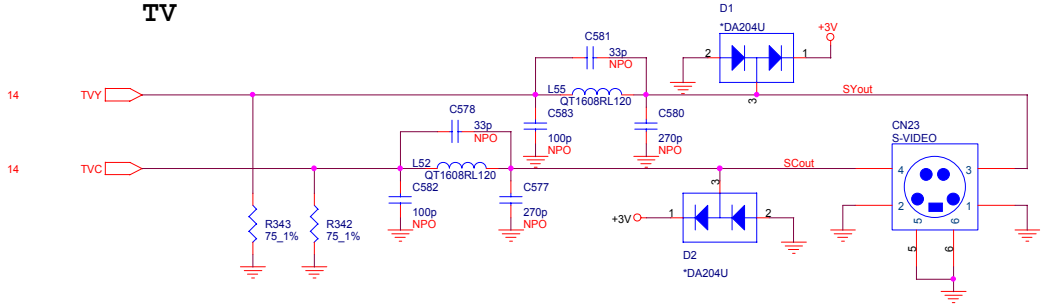


## LVDS

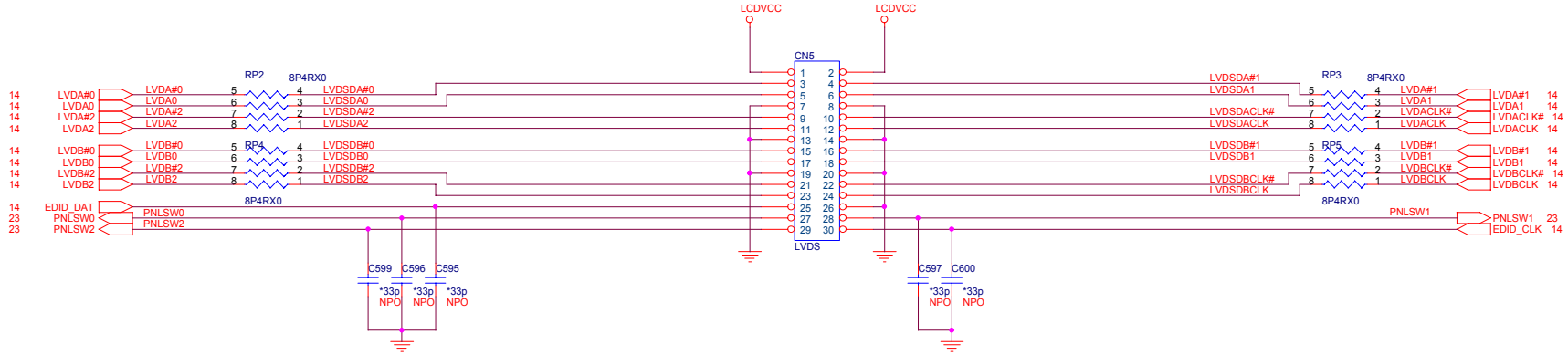


## INVERTER

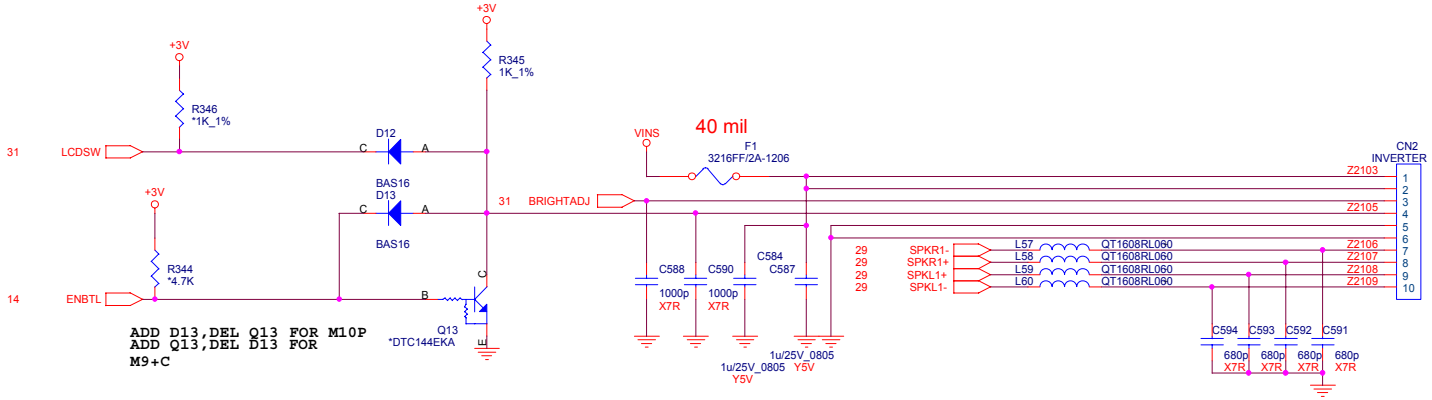


ADD D13,DEL Q13 FOR M10P
ADD Q13,DEL D13 FOR
M9+C

## PANNEL SELECT

| PNLSW2 | PNLSW1 | PNLSW0 | |
|---|---|---|---|
| L | L | L | reserved |
| L | L | H | 1680X1050 |
| L | H | L | 1600X1200 |
| L | H | H | 1400X1050 |
| H | L | L | 1280X1024 |
| H | L | H | 1280X854 |
| H | H | L | 1280X800 |
| H | H | H | 1024X768 |

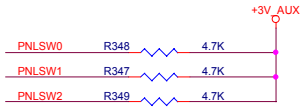


UNIWILL COMPUTER CORP.

Title: TV & LVDS & INVERTER & PANNEL SELECT

Size: 2445 | Document Number: 258KA0 | Rev: B

Date: Tuesday, February 10, 2004 | Sheet 21 of 42

# SOUTH BRIDGE -1

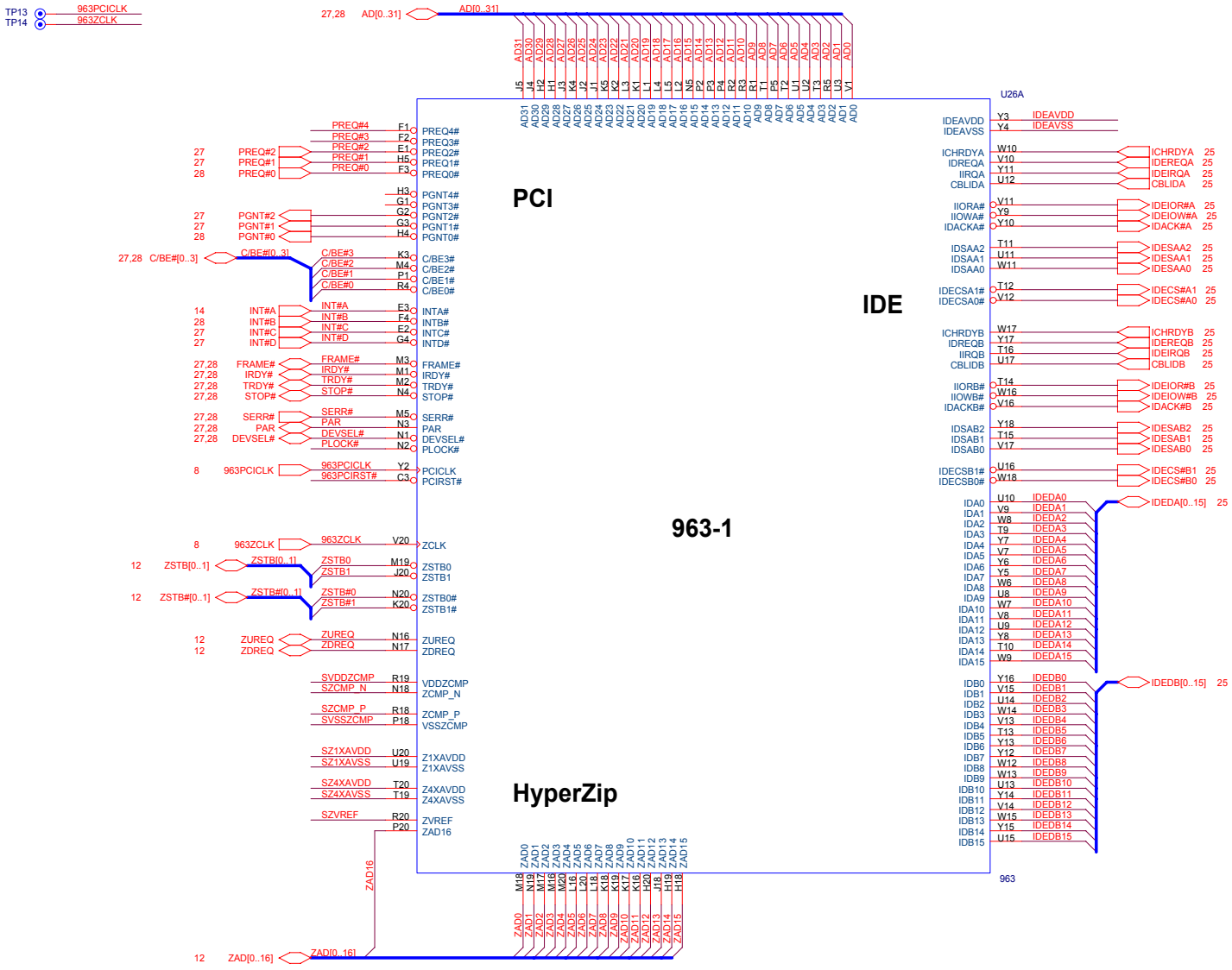


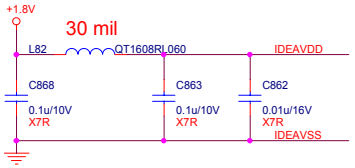


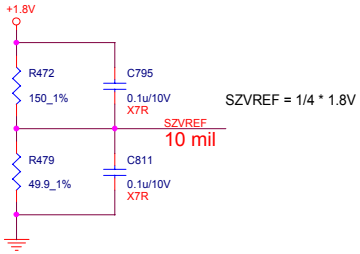


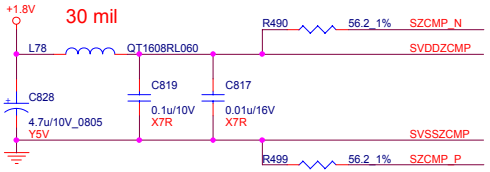


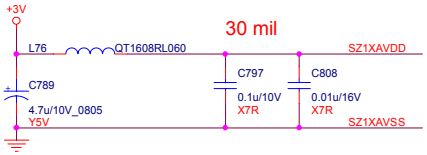


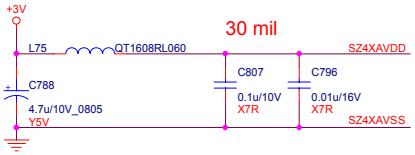


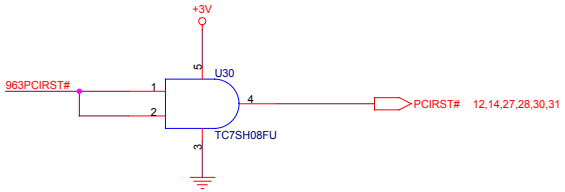


## PCI Pull High

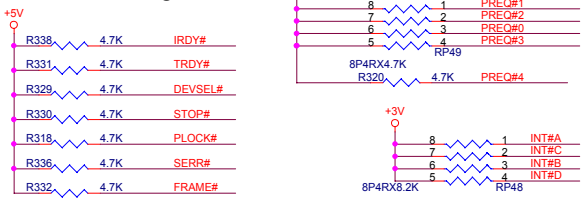


| | |
|---|---|
| UNIWILL COMPUTER CORP. | |
| Title | SIS963L(HYPERZIP & PCI & IDE) |
| Size | Document Number 258KA0 Rev B |
| Date: Tuesday, February 10, 2004 | Sheet 22 of 42 |

# SOUTH BRIDGE -2

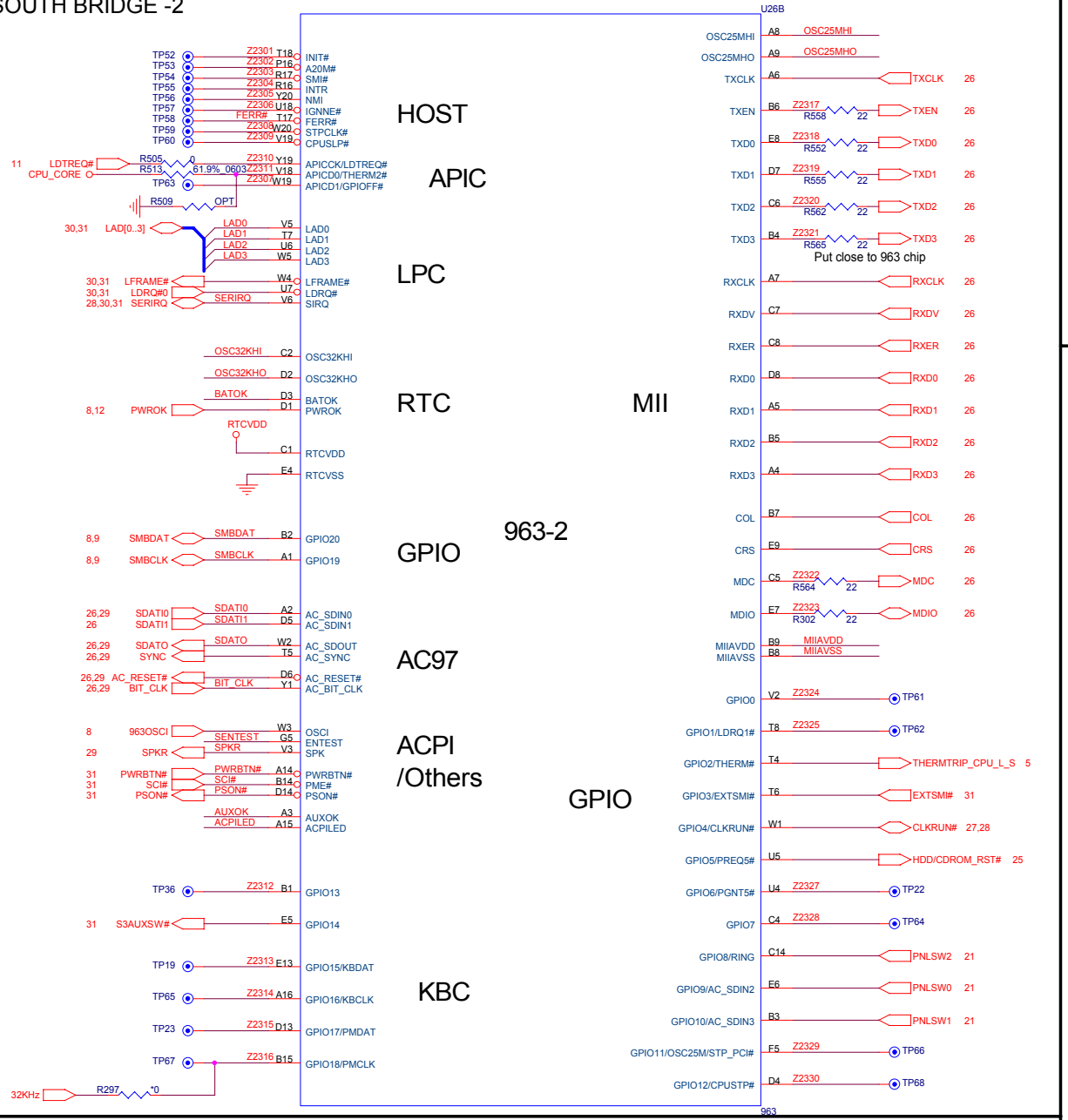


# RTC

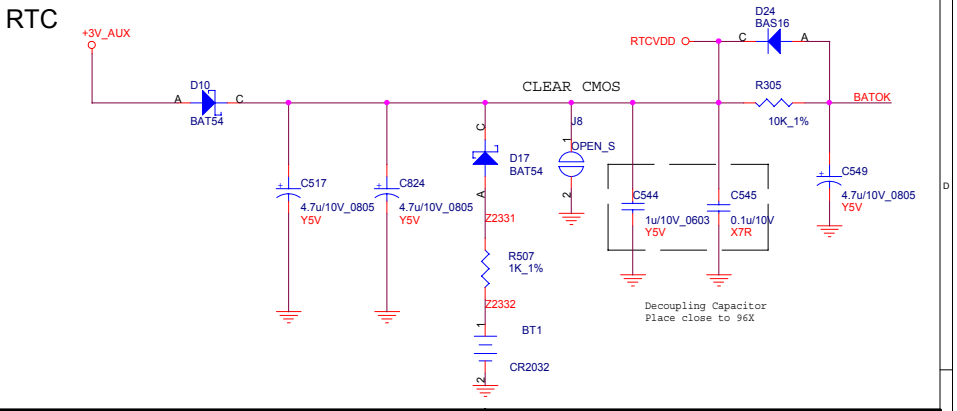


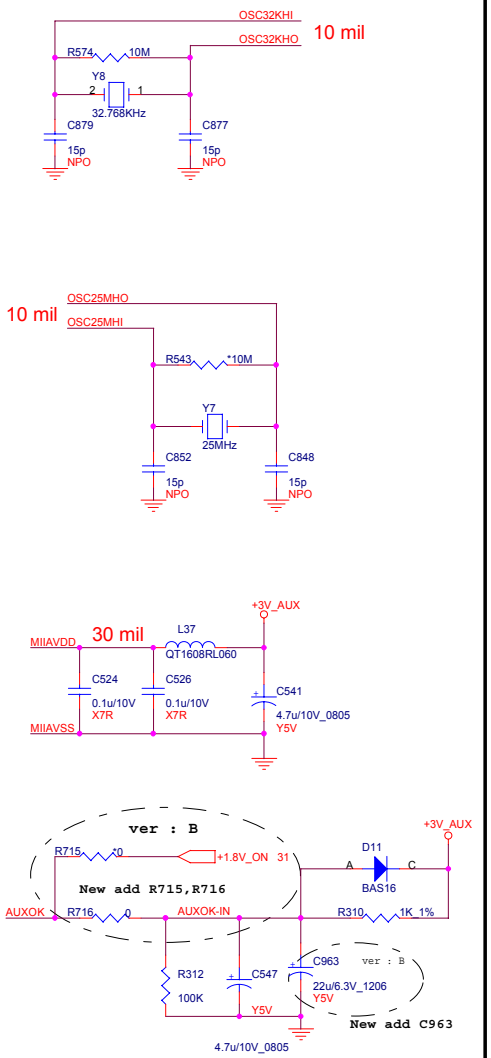


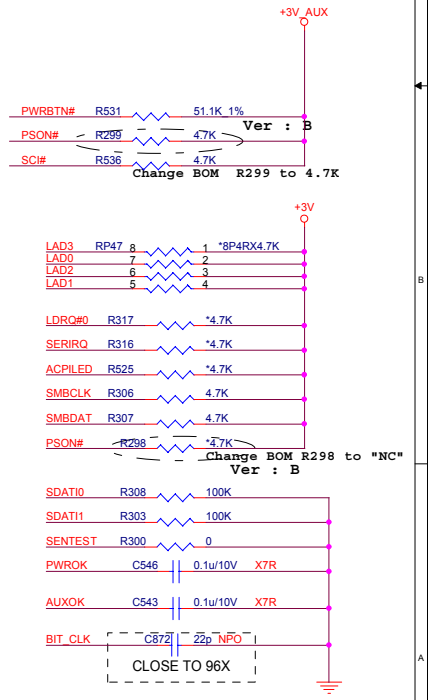


# SB Hardware Trap

UNIWILL COMPUTER CORP.

Title: SIS963L(GPIO & HOST & LPC & APIC & AC97 & MII & ACPI)

| Size | Document Number | Rev |
|---|---|---|
| | 258KA0 | B |

Date: Tuesday, February 10, 2004 Sheet 23 of 42

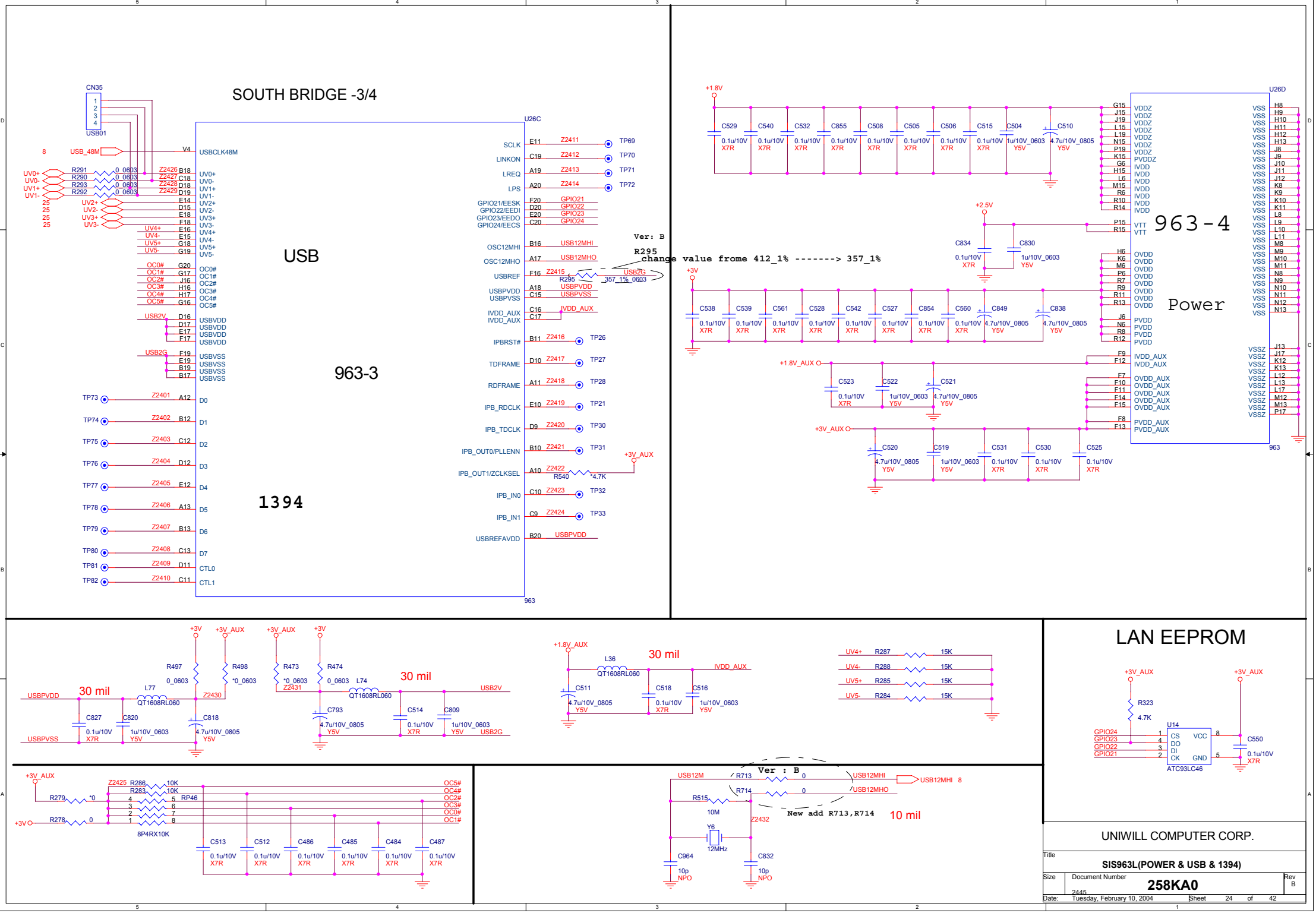
SOUTH BRIDGE -3/4
USB
963-3
1394
963-4
Power
LAN EEPROM
Ver: B
R295
change value frome 412_1% -------> 357_1%
Ver : B
New add R713,R714
10 mil
30 mil
UNIWILL COMPUTER CORP.
Title
SIS963L(POWER & USB & 1394)
Size
Document Number
258KA0
Rev
B
Date: Tuesday, February 10, 2004
Sheet 24 of 42

# HDD & CD-ROM

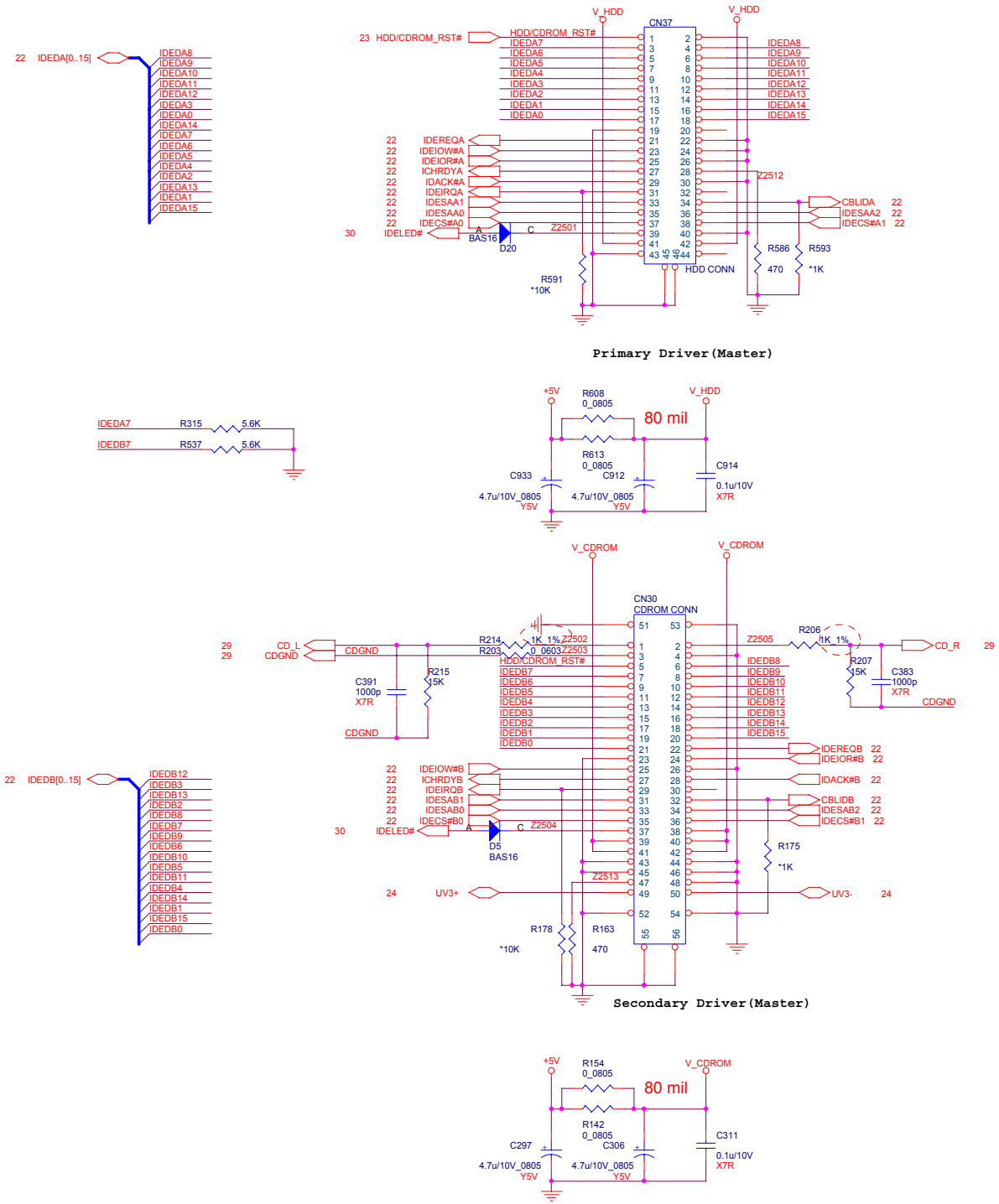


# USB CONN

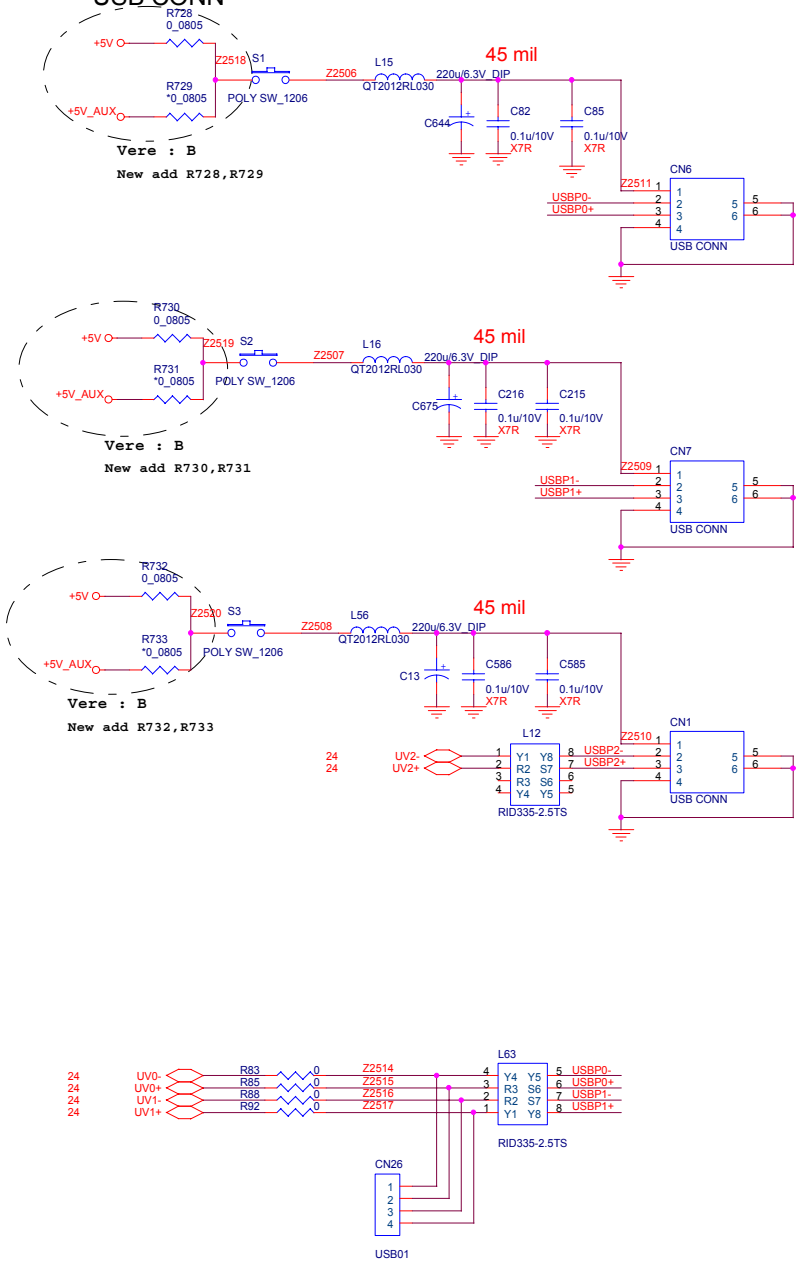


UNIWILL COMPUTER CORP.

Title: **HDD & CD-ROM & USB &BLUE TOOTH**

Size: 2445 | Document Number: **258KA0** | Rev: B

Date: Tuesday, February 10, 2004 | Sheet 25 of 42

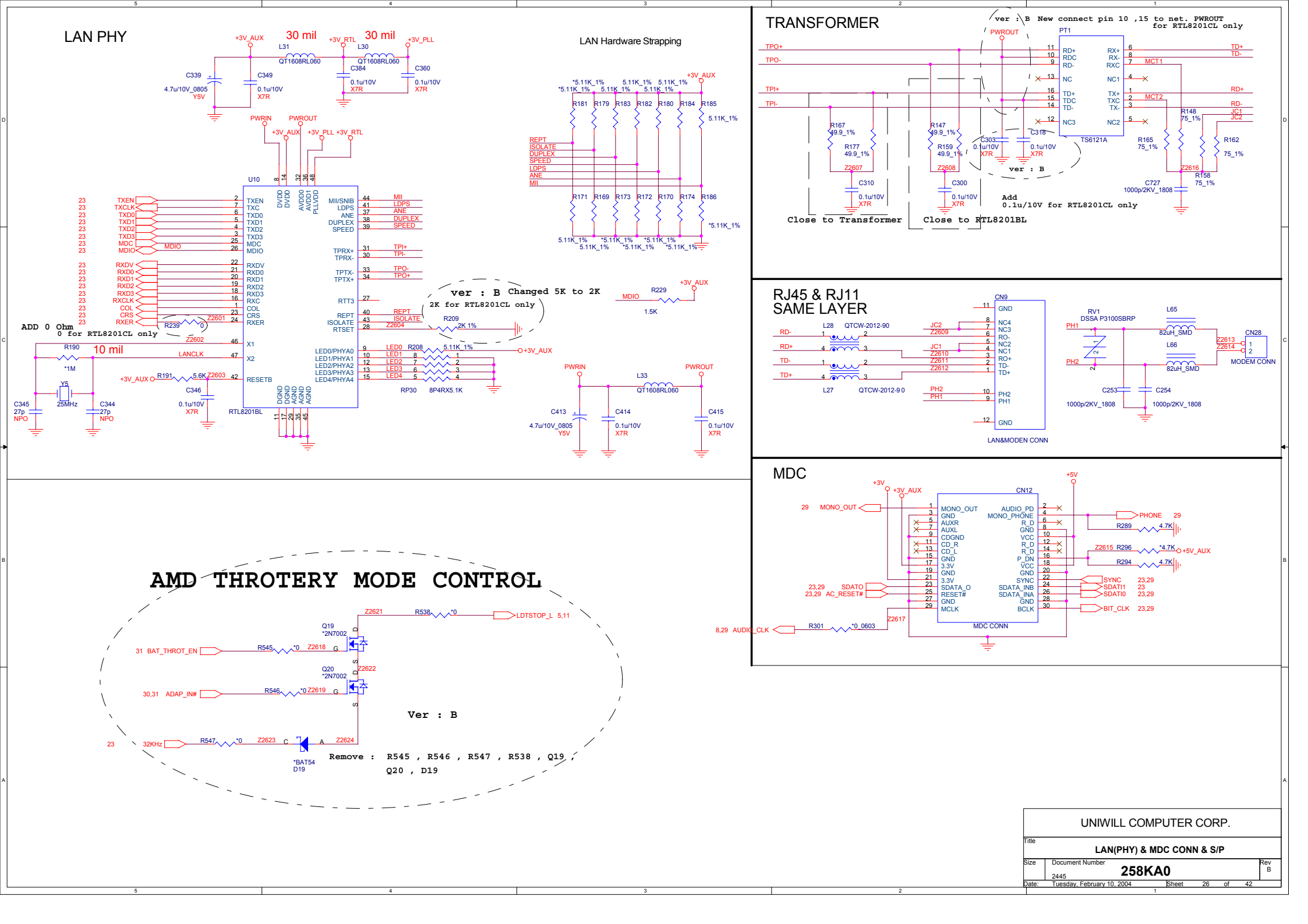
LAN PHY
30 mil
30 mil
L31
QT1608RL060
L30
QT1608RL060
+3V_AUX
+3V_RTL
+3V_PLL
C339
4.7u/10V_0805
Y5V
C349
0.1u/10V
X7R
C384
0.1u/10V
X7R
C360
0.1u/10V
X7R
PWRIN
PWROUT
U10
RTL8201BL
TXEN
TXCLK
TXD0
TXD1
TXD2
TXD3
MDC
MDIO
RXDV
RXD0
RXD1
RXD2
RXD3
RXCLK
COL
CRS
RXER
MII/SNIB
LDPS
ANE
DUPLEX
SPEED
TPRX+
TPRX-
TPTX-
TPTX+
RTT3
REPT
ISOLATE
RTSET
LED0/PHYA0
LED1/PHYA1
LED2/PHYA2
LED3/PHYA3
LED4/PHYA4
RESETB
X1
X2
LANCLK
ADD 0 Ohm
0 for RTL8201CL only
R190
10 mil
*1M
Y5
25MHz
C345
27p
NPO
C344
27p
NPO
R191
5.6K
Z2603
C346
0.1u/10V
X7R
R239
0
Z2601
Z2602
ver : B Changed 5K to 2K
2K for RTL8201CL only
R209
2K 1%
R208
5.11K_1%
RP30
8P4RX5.1K
LAN Hardware Strapping
R181
R179
R183
R182
R180
R184
R185
5.11K_1%
*5.11K_1%
REPT
ISOLATE
DUPLEX
SPEED
LDPS
ANE
MII
R171
R169
R173
R172
R170
R174
R186
R229
1.5K
MDIO
L33
QT1608RL060
C413
4.7u/10V_0805
Y5V
C414
0.1u/10V
X7R
C415
0.1u/10V
X7R
TRANSFORMER
ver : B New connect pin 10 ,15 to net. PWROUT
for RTL8201CL only
PT1
TS6121A
TPO+
TPO-
TPI+
TPI-
TD+
TD-
RD+
RD-
MCT1
MCT2
JC1
JC2
R167
49.9_1%
R177
49.9_1%
R147
49.9_1%
R159
49.9_1%
C303
0.1u/10V
X7R
C318
0.1u/10V
X7R
ver : B
C310
0.1u/10V
X7R
C300
0.1u/10V
X7R
Add
0.1u/10V for RTL8201CL only
Close to Transformer
Close to RTL8201BL
R165
75_1%
R148
75_1%
R162
75_1%
R158
75_1%
C727
1000p/2KV_1808
RJ45 & RJ11
SAME LAYER
CN9
LAN&MODEN CONN
L28
QTCW-2012-90
L27
QTCW-2012-90
RV1
DSSA P3100SBRP
L65
82uH_SMD
L66
82uH_SMD
CN28
MODEM CONN
C253
1000p/2KV_1808
C254
1000p/2KV_1808
MDC
CN12
MDC CONN
MONO_OUT
AUDIO_PD
MONO_PHONE
PHONE
R289
4.7K
R296
*4.7K
R294
4.7K
+5V_AUX
SDATO
AC_RESET#
SYNC
SDATI1
SDATI0
BIT_CLK
AUDIO_CLK
R301
*0_0603
Z2617
AMD THROTERY MODE CONTROL
Z2621
R538
*0
LDTSTOP_L 5,11
Q19
*2N7002
31 BAT_THROT_EN
R545
*0
Z2618
Q20
*2N7002
Z2622
30,31 ADAP_IN#
R546
*0
Z2619
23 32KHz
R547
*0
Z2623
Z2624
*BAT54
D19
Ver : B
Remove : R545 , R546 , R547 , R538 , Q19 ,
Q20 , D19
UNIWILL COMPUTER CORP.
Title
LAN(PHY) & MDC CONN & S/P
Size
Document Number
258KA0
Rev
B
Date: Tuesday, February 10, 2004
Sheet 26 of 42

# MINI PCI

Wireless LAN

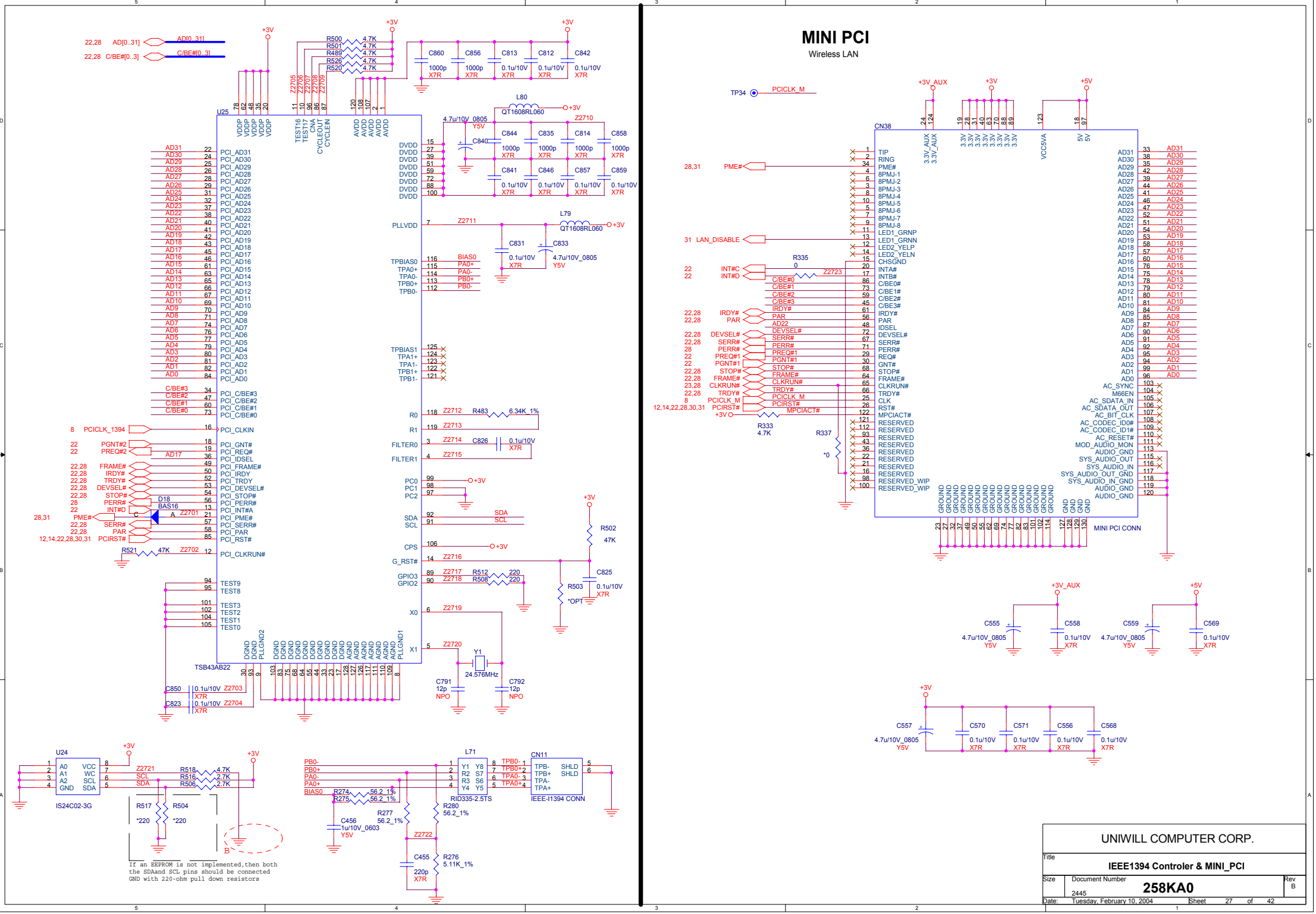


UNIWILL COMPUTER CORP.

Title: **IEEE1394 Controler & MINI_PCI**

Size: 2445 | Document Number: **258KA0** | Rev: B

Date: Tuesday, February 10, 2004 | Sheet 27 of 42

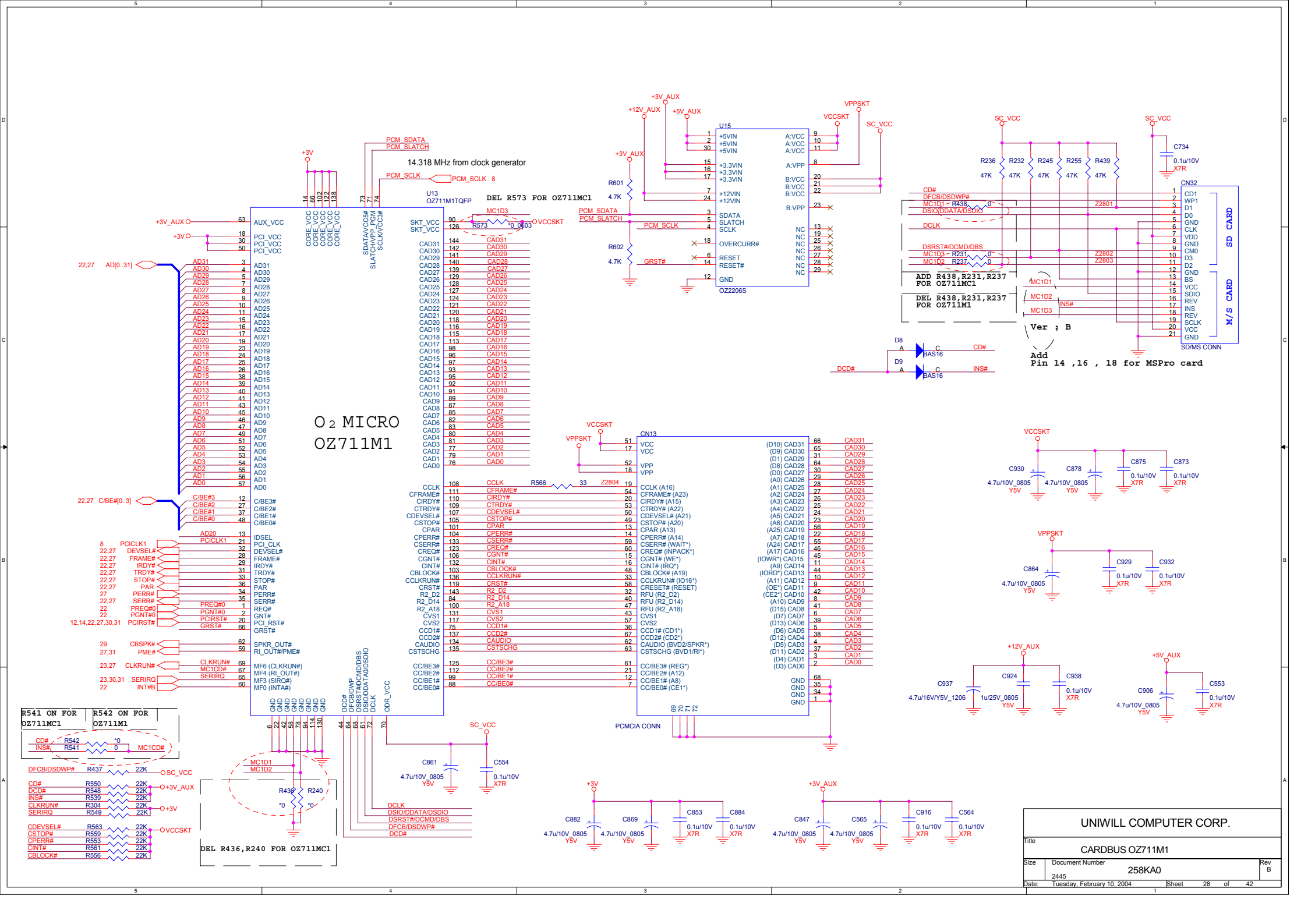
O2 MICRO
OZ711M1
U13
OZ711M1TQFP
14.318 MHz from clock generator
DEL R573 FOR OZ711MC1
DEL R436,R240 FOR OZ711MC1
U15
OZ2206S
CN32
SD CARD
M/S CARD
SD/MS CONN
ADD R438,R231,R237
FOR OZ711MC1
DEL R438,R231,R237
FOR OZ711M1
Ver ; B
Add
Pin 14 ,16 , 18 for MSPro card
CN13
PCMCIA CONN
R541 ON FOR OZ711MC1
R542 ON FOR OZ711M1
UNIWILL COMPUTER CORP.
CARDBUS OZ711M1
258KA0
Rev B
Date: Tuesday, February 10, 2004
Sheet 28 of 42

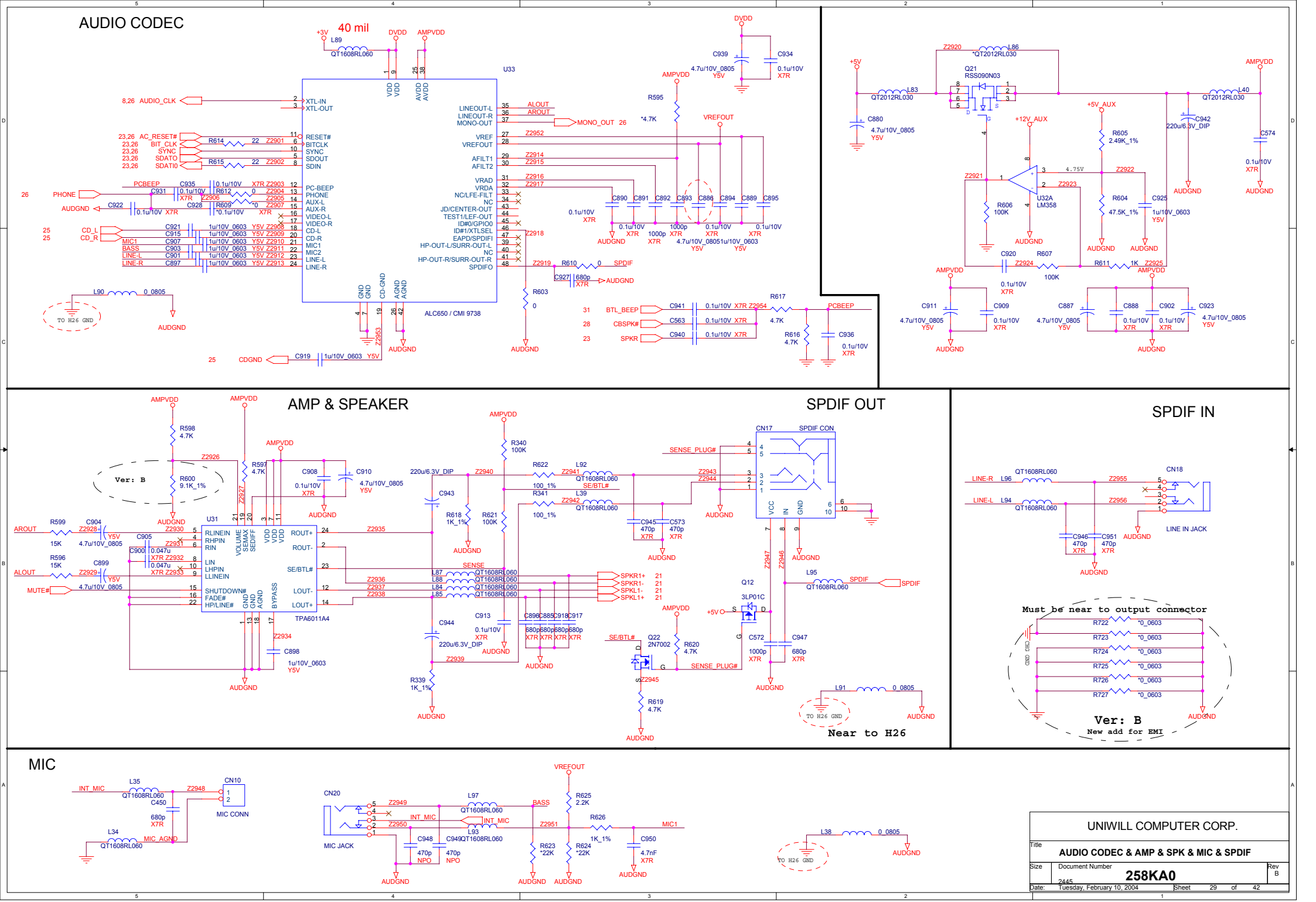
AUDIO CODEC
40 mil
U33
ALC650 / CMI 9738
AMP & SPEAKER
U31
TPA6011A4
Ver: B
SPDIF OUT
CN17
SPDIF CON
SPDIF IN
CN18
LINE IN JACK
Must be near to output connector
Ver: B
New add for EMI
Near to H26
MIC
CN10
MIC CONN
CN20
MIC JACK
UNIWILL COMPUTER CORP.
AUDIO CODEC & AMP & SPK & MIC & SPDIF
258KA0
Tuesday, February 10, 2004
Sheet 29 of 42

## LED

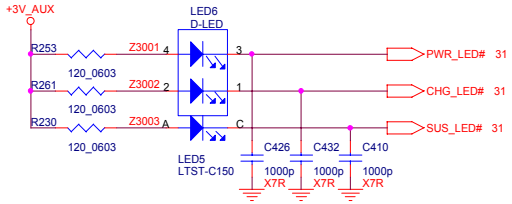


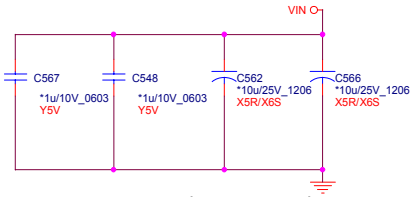


Must close to SPDIF side for EMI issue.

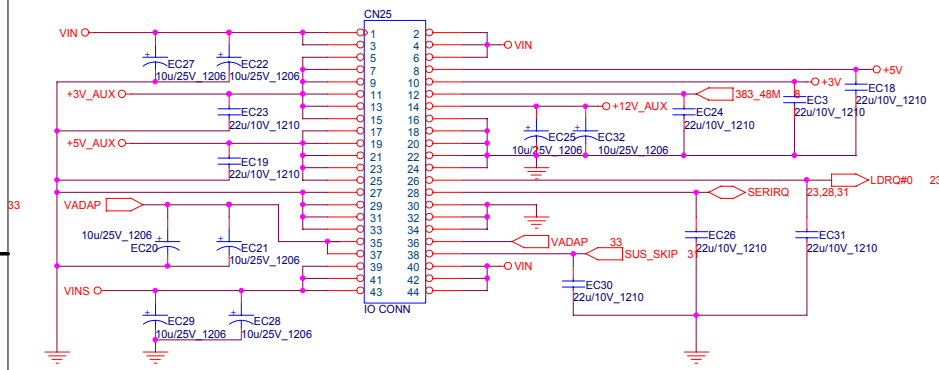


## IrDA

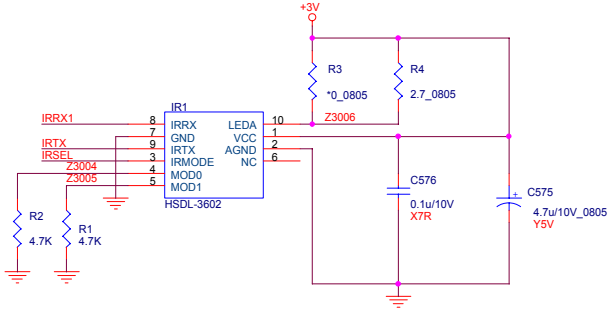


## HALL SENSOR

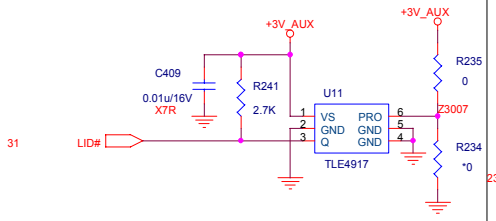


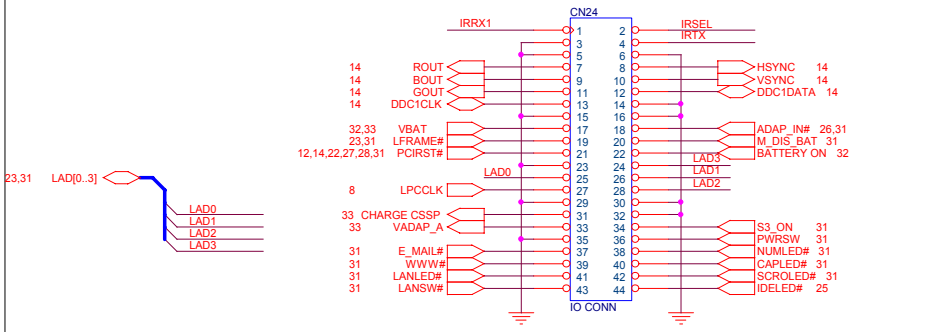


## VGA FAN

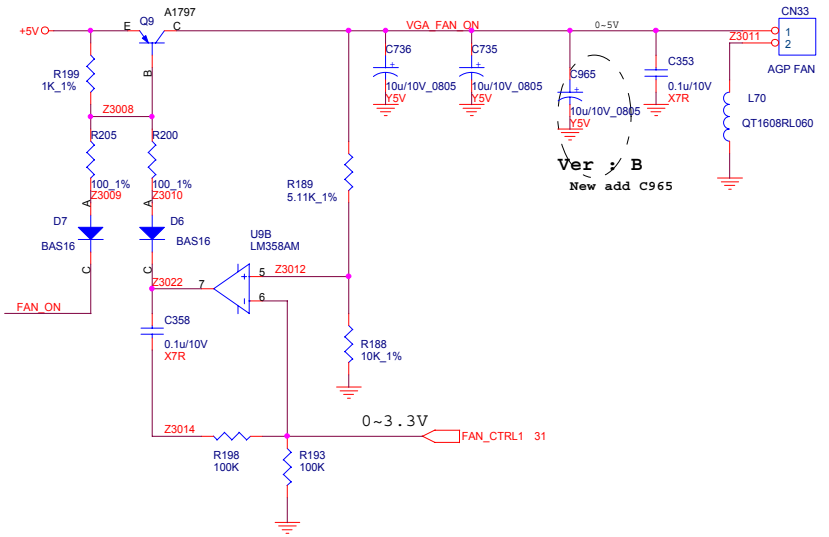


## CPU FAN

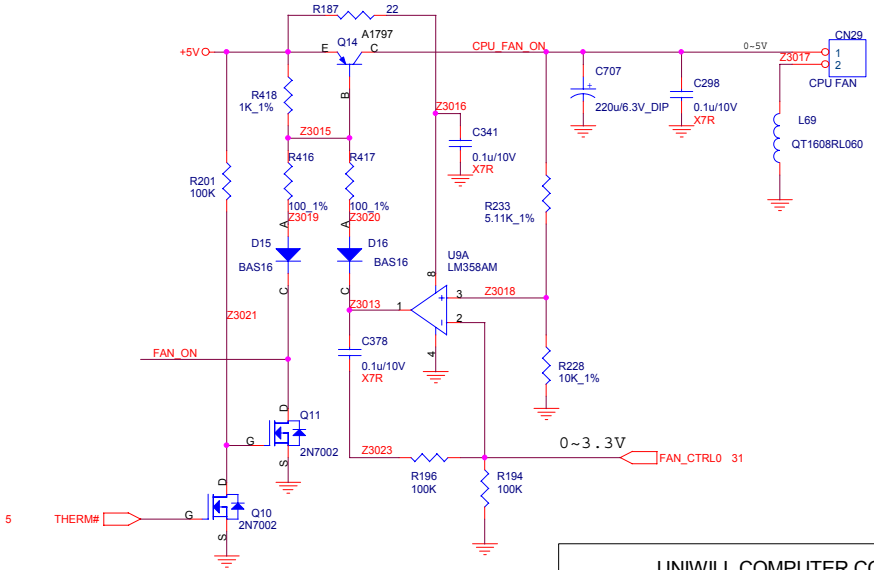


| | |
|---|---|
| UNIWILL COMPUTER CORP. | |
| Title | SW&LED&IR&FAN&I/O CONN |
| Size | Document Number 2445 258KA0 Rev B |
| Date: Tuesday, February 10, 2004 | Sheet 30 of 42 |

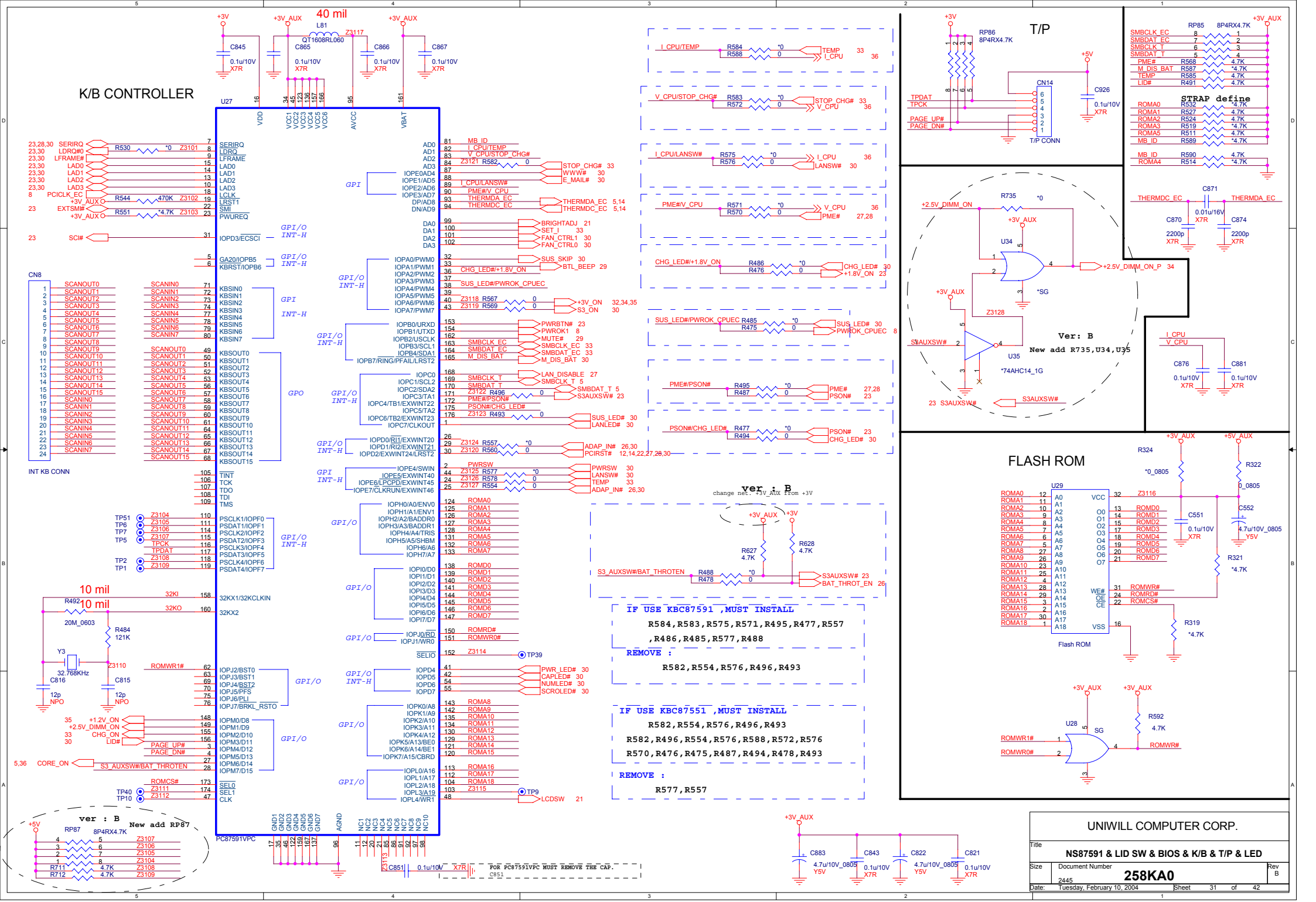


UNIWILL COMPUTER CORP.

Title: NS87591 & LID SW & BIOS & K/B & T/P & LED

Size: 2445 | Document Number: 258KA0 | Rev: B

Date: Tuesday, February 10, 2004 | Sheet 31 of 42

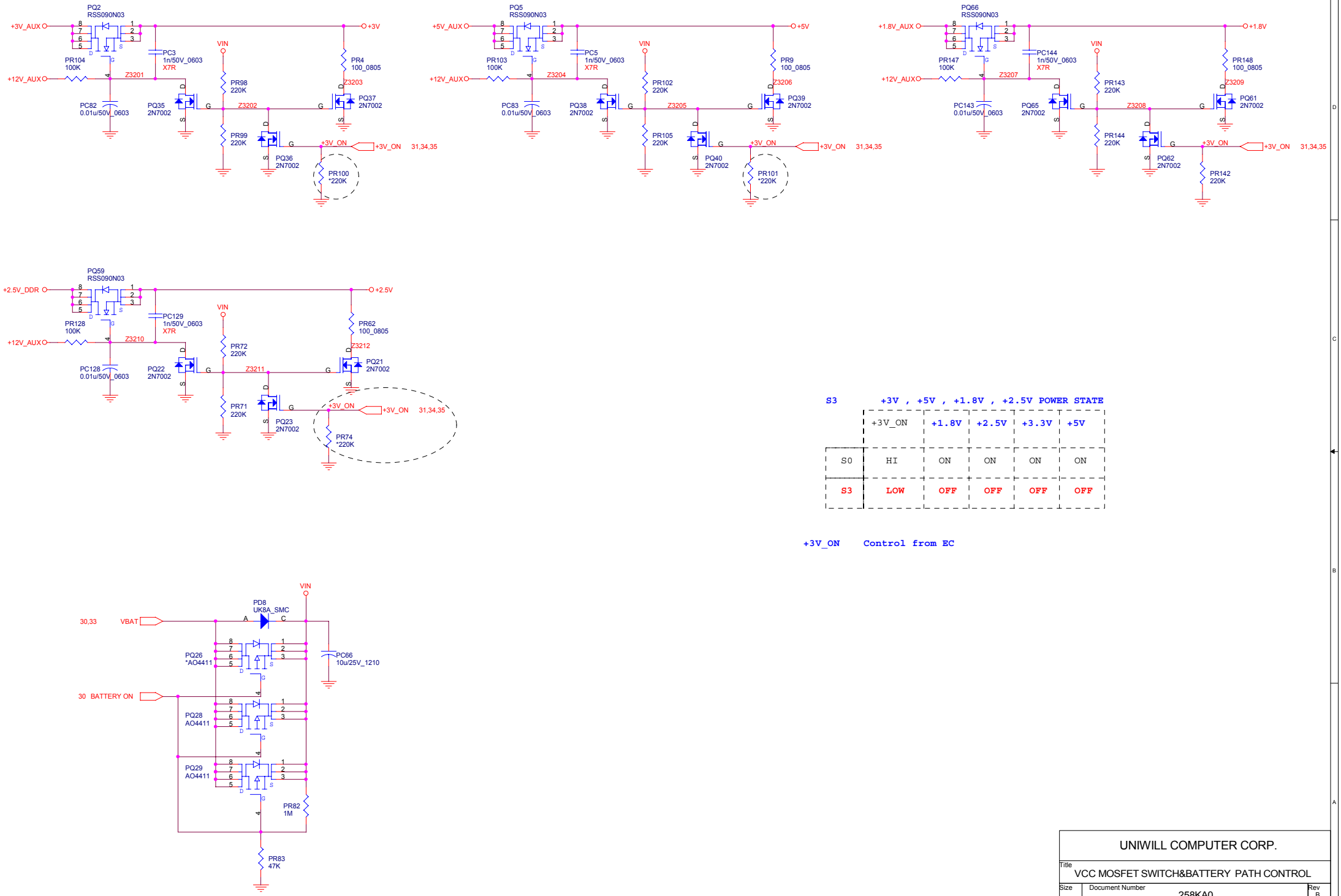


**S3** **+3V , +5V , +1.8V , +2.5V POWER STATE**

| | +3V_ON | +1.8V | +2.5V | +3.3V | +5V |
|---|---|---|---|---|---|
| S0 | HI | ON | ON | ON | ON |
| S3 | LOW | OFF | OFF | OFF | OFF |

**+3V_ON** **Control from EC**

UNIWILL COMPUTER CORP.

Title: VCC MOSFET SWITCH&BATTERY PATH CONTROL

| Size | Document Number | Rev |
|---|---|---|
| | 258KA0 | B |
| | 2445 | |

Date: Tuesday, February 10, 2004 Sheet 32 of 42

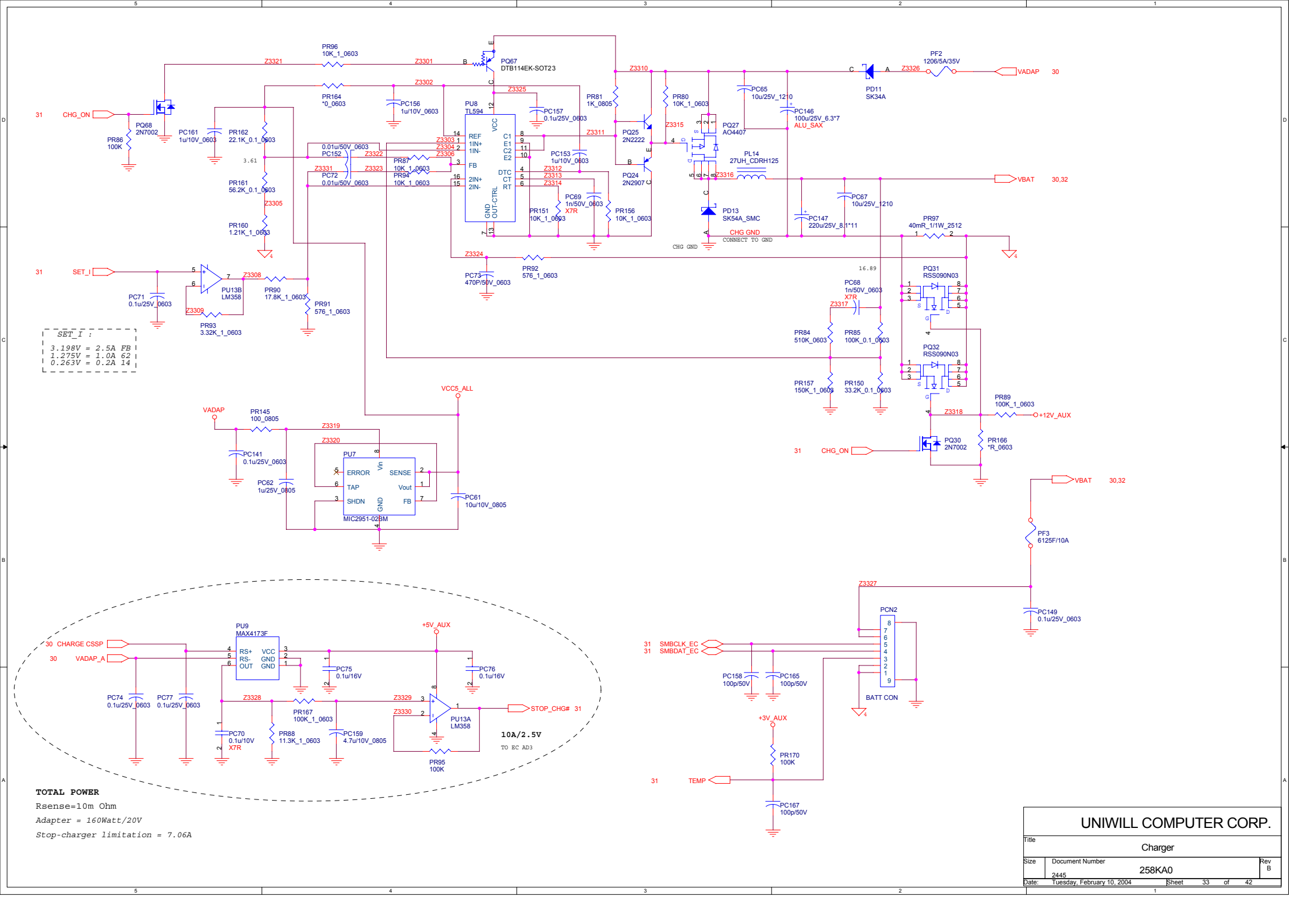
PR96 10K_1_0603
Z3321
Z3301
PQ67 DTB114EK-SOT23
Z3302
PR164 *0_0603
PC156 1u/10V_0603
Z3325
PC157 0.1u/25V_0603
PU8 TL594
REF 1IN+ 1IN- FB 2IN+ 2IN- DTC CT RT VCC C1 E1 C2 E2 GND OUT-CTRL
Z3310
PR81 1K_0805
PR80 10K_1_0603
PC65 10u/25V_1210
PC146 100u/25V_6.3*7 ALU_SAX
PF2 1206/5A/35V
Z3326
VADAP 30
PD11 SK34A
31 CHG_ON
PQ68 2N7002
PR86 100K
PC161 1u/10V_0603
PR162 22.1K_0.1_0603
3.61
PR161 56.2K_0.1_0603
Z3305
PR160 1.21K_1_0603
0.01u/50V_0603 PC152
Z3322
Z3331 PC72 0.01u/50V_0603
Z3323
PR87 10K_1_0603
PR94 10K_1_0603
Z3303 Z3304 Z3306
Z3311
PC153 1u/10V_0603
Z3312 Z3313 Z3314
PR151 10K_1_0603
PC69 1n/50V_0603 X7R
PR156 10K_1_0603
PQ25 2N2222
PQ24 2N2907
Z3315
PQ27 AO4407
PL14 27UH_CDRH125
Z3316
VBAT 30,32
PC67 10u/25V_1210
PD13 SK54A_SMC
PC147 220u/25V_8.1*11
CHG GND
CONNECT TO GND
CHG GND
PR97 40mR_1/1W_2512
Z3324
PC73 470P/50V_0603
PR92 576_1_0603
31 SET_I
PC71 0.1u/25V_0603
PU13B LM358
Z3308
PR90 17.8K_1_0603
Z3309
PR93 3.32K_1_0603
PR91 576_1_0603
SET_I :
3.198V = 2.5A FB
1.275V = 1.0A 62
0.263V = 0.2A 14
16.89
PC68 1n/50V_0603 X7R
Z3317
PR84 510K_0603
PR85 100K_0.1_0603
PQ31 RSS090N03
PQ32 RSS090N03
PR157 150K_1_0603
PR150 33.2K_0.1_0603
PR89 100K_1_0603
Z3318
+12V_AUX
31 CHG_ON
PQ30 2N7002
PR166 *R_0603
VCC5_ALL
VADAP
PR145 100_0805
Z3319
Z3320
PC141 0.1u/25V_0603
PU7
ERROR TAP SHDN Vin SENSE Vout FB GND
MIC2951-02BM
PC62 1u/25V_0805
PC61 10u/10V_0805
VBAT 30,32
PF3 6125F/10A
Z3327
PC149 0.1u/25V_0603
PCN2
BATT CON
31 SMBCLK_EC
31 SMBDAT_EC
PC158 100p/50V
PC165 100p/50V
+3V_AUX
PR170 100K
31 TEMP
PC167 100p/50V
PU9 MAX4173F
RS+ RS- OUT VCC GND GND
30 CHARGE CSSP
30 VADAP_A
+5V_AUX
PC75 0.1u/16V
PC76 0.1u/16V
PC74 0.1u/25V_0603
PC77 0.1u/25V_0603
Z3328
PR167 100K_1_0603
Z3329
Z3330
PU13A LM358
STOP_CHG# 31
PC70 0.1u/10V X7R
PR88 11.3K_1_0603
PC159 4.7u/10V_0805
PR95 100K
10A/2.5V
TO EC AD3
TOTAL POWER
Rsense=10m Ohm
Adapter = 160Watt/20V
Stop-charger limitation = 7.06A
UNIWILL COMPUTER CORP.
Title
Charger
Size
Document Number
2445
258KA0
Rev B
Date: Tuesday, February 10, 2004
Sheet 33 of 42

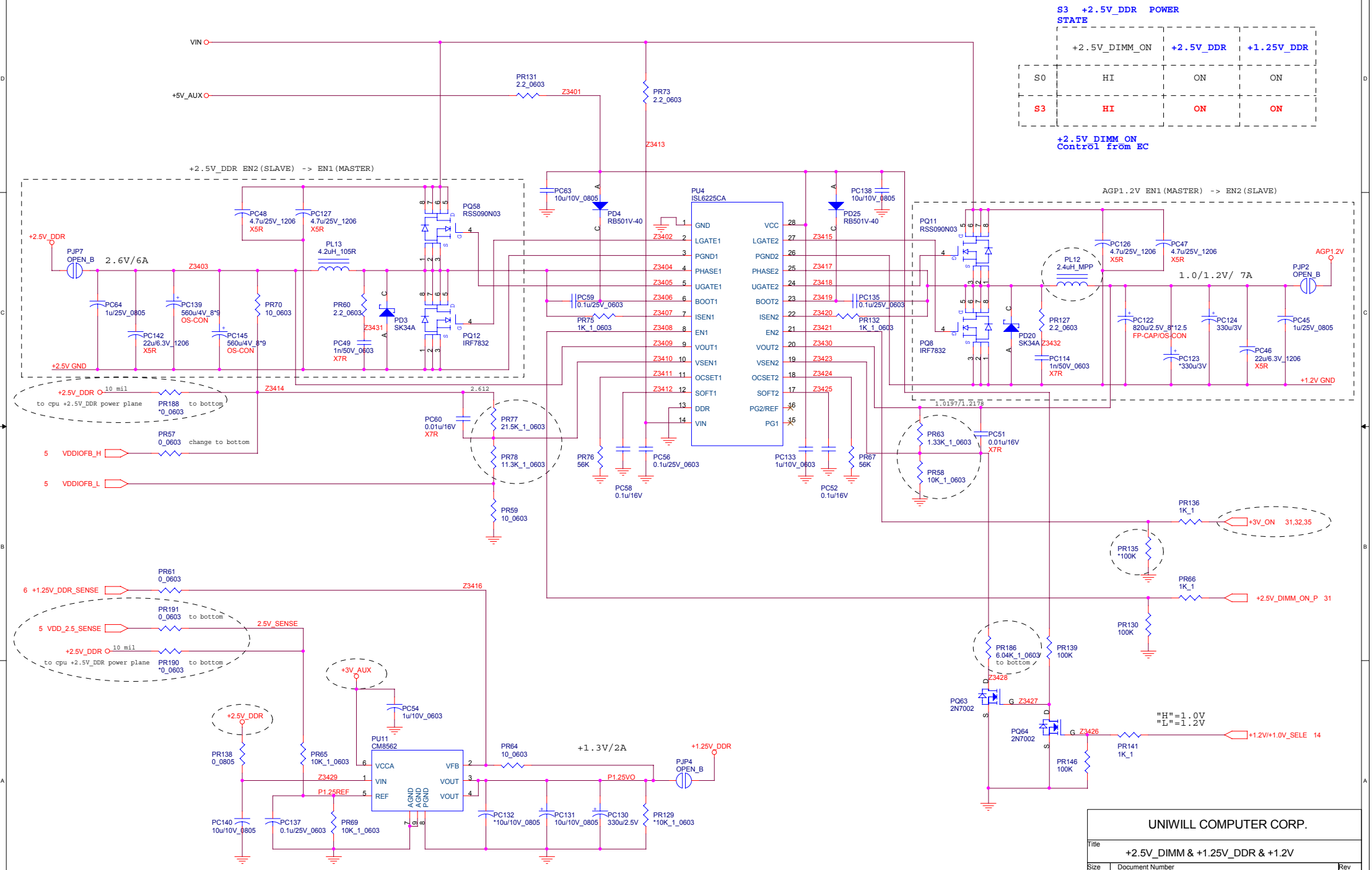
S3 +2.5V_DDR POWER STATE
+2.5V_DIMM_ON
+2.5V_DDR
+1.25V_DDR
S0
HI
ON
ON
S3
HI
ON
ON
+2.5V_DIMM_ON Control from EC
VIN
+5V_AUX
PR131 2.2_0603
Z3401
PR73 2.2_0603
Z3413
+2.5V_DDR EN2(SLAVE) -> EN1(MASTER)
PJP7 OPEN_B
2.6V/6A
+2.5V_DDR
+2.5V GND
Z3403
PC64 1u/25V_0805
PC139 560u/4V_8*9 OS-CON
PC142 22u/6.3V_1206 X5R
PC145 560u/4V_8*9 OS-CON
PR70 10_0603
PC48 4.7u/25V_1206 X5R
PC127 4.7u/25V_1206 X5R
PL13 4.2uH_105R
PR60 2.2_0603
PC49 1n/50V_0603 X7R
Z3431
PD3 SK34A
PQ58 RSS090N03
PQ12 IRF7832
PC63 10u/10V_0805
PD4 RB501V-40
PU4 ISL6225CA
GND
LGATE1
PGND1
PHASE1
UGATE1
BOOT1
ISEN1
EN1
VOUT1
VSEN1
OCSET1
SOFT1
DDR
VIN
VCC
LGATE2
PGND2
PHASE2
UGATE2
BOOT2
ISEN2
EN2
VOUT2
VSEN2
OCSET2
SOFT2
PG2/REF
PG1
Z3402
Z3404
Z3405
Z3406
Z3407
Z3408
Z3409
Z3410
Z3411
Z3412
Z3415
Z3417
Z3418
Z3419
Z3420
Z3421
Z3430
Z3423
Z3424
Z3425
PC59 0.1u/25V_0603
PR75 1K_1_0603
PC135 0.1u/25V_0603
PR132 1K_1_0603
PC138 10u/10V_0805
PD25 RB501V-40
AGP1.2V EN1(MASTER) -> EN2(SLAVE)
PQ11 RSS090N03
PQ8 IRF7832
PL12 2.4uH_MPP
PC126 4.7u/25V_1206 X5R
PC47 4.7u/25V_1206 X5R
PR127 2.2_0603
PD20 SK34A
Z3432
PC114 1n/50V_0603 X7R
PC122 820u/2.5V_8*12.5 FP-CAP/OS-CON
PC123 *330u/3V
PC124 330u/3V
PC46 22u/6.3V_1206 X5R
PC45 1u/25V_0805
1.0/1.2V/ 7A
AGP1.2V
PJP2 OPEN_B
+1.2V GND
+2.5V_DDR
10 mil
to cpu +2.5V_DDR power plane
PR188 *0_0603
to bottom
Z3414
PR57 0_0603
change to bottom
5 VDDIOFB_H
5 VDDIOFB_L
PC60 0.01u/16V X7R
PR77 21.5K_1_0603
PR78 11.3K_1_0603
PR59 10_0603
PR76 56K
PC58 0.1u/16V
PC56 0.1u/25V_0603
PC133 1u/10V_0603
PC52 0.1u/16V
PR67 56K
PR63 1.33K_1_0603
PR58 10K_1_0603
PC51 0.01u/16V X7R
PR136 1K_1
+3V_ON 31,32,35
PR135 *100K
PR66 1K_1
+2.5V_DIMM_ON_P 31
PR130 100K
6 +1.25V_DDR_SENSE
PR61 0_0603
Z3416
5 VDD_2.5_SENSE
PR191 0_0603
2.5V_SENSE
PR190 *0_0603
PR186 6.04K_1_0603
PR139 100K
Z3428
PQ63 2N7002
Z3427
PQ64 2N7002
Z3426
"H"=1.0V
"L"=1.2V
+1.2V/+1.0V_SELE 14
PR141 1K_1
PR146 100K
+3V_AUX
PC54 1u/10V_0603
+2.5V_DDR
PR138 0_0805
PR65 10K_1_0603
PU11 CM8562
VCCA
VIN
REF
VFB
VOUT
VOUT
AGND
AGND
PGND
Z3429
P1.25REF
PR64 10_0603
+1.3V/2A
P1.25VO
+1.25V_DDR
PJP4 OPEN_B
PC140 10u/10V_0805
PC137 0.1u/25V_0603
PR69 10K_1_0603
PC132 *10u/10V_0805
PC131 10u/10V_0805
PC130 330u/2.5V
PR129 *10K_1_0603
UNIWILL COMPUTER CORP.
Title
+2.5V_DIMM & +1.25V_DDR & +1.2V
Size
Document Number
2445
258KA0
Rev B
Date: Tuesday, February 10, 2004
Sheet 34 of 42

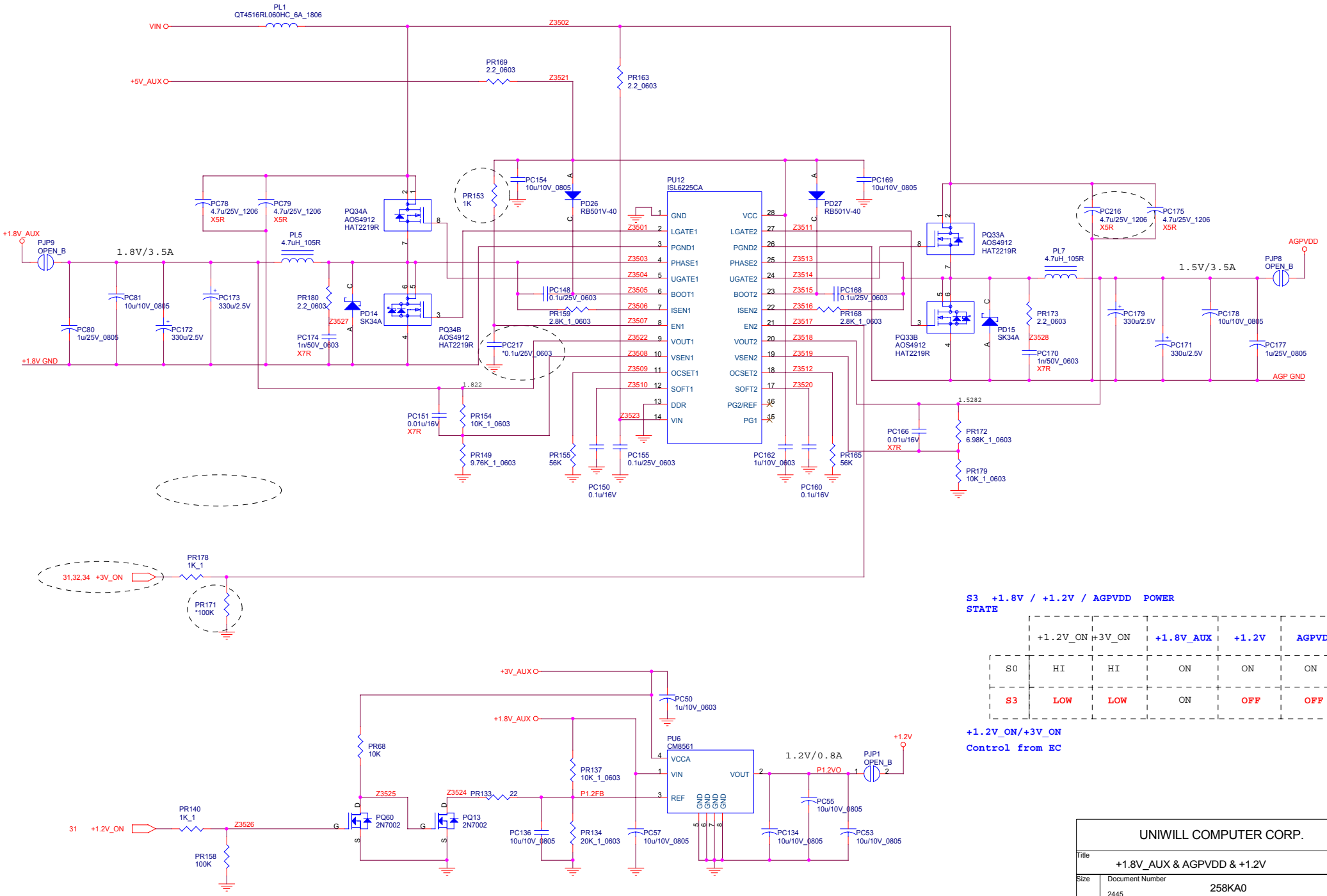


**S3 +1.8V / +1.2V / AGPVDD POWER STATE**

| | +1.2V_ON | +3V_ON | +1.8V_AUX | +1.2V | AGPVDD |
|---|---|---|---|---|---|
| S0 | HI | HI | ON | ON | ON |
| S3 | LOW | LOW | ON | OFF | OFF |

**+1.2V_ON/+3V_ON**

**Control from EC**

| | |
|---|---|
| UNIWILL COMPUTER CORP. | |
| Title | +1.8V_AUX & AGPVDD & +1.2V |
| Size | Document Number 258KA0 Rev B |
| 2445 | |
| Date: Tuesday, February 10, 2004 | Sheet 35 of 42 |

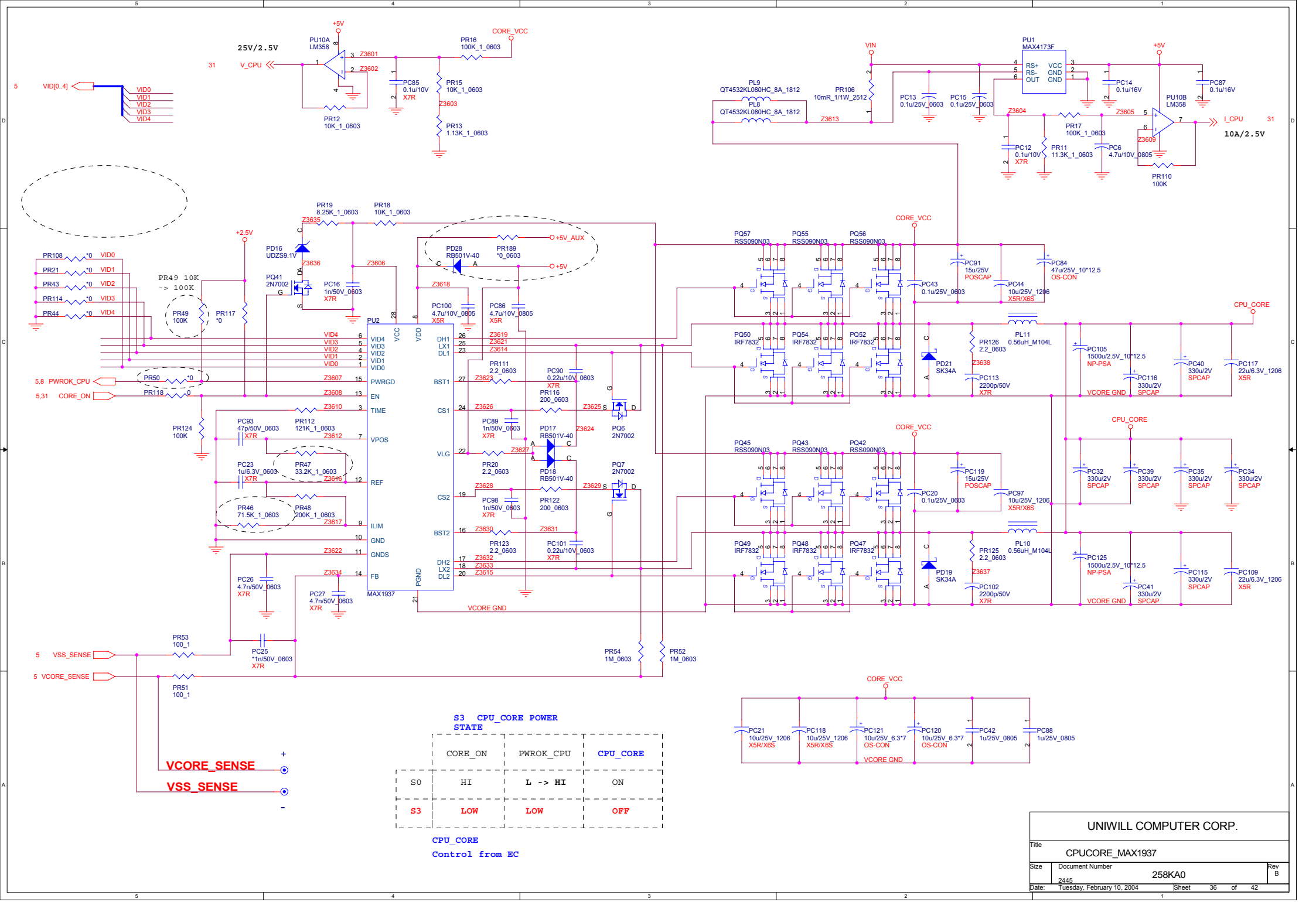
25V/2.5V
PU10A LM358
V_CPU
VID[0..4]
VID0
VID1
VID2
VID3
VID4
PR12 10K_1_0603
PC85 0.1u/10V X7R
PR16 100K_1_0603
PR15 10K_1_0603
PR13 1.13K_1_0603
CORE_VCC
PU1 MAX4173F
RS+ RS- OUT VCC GND GND
VIN
PL9 QT4532KL080HC_8A_1812
PL8 QT4532KL080HC_8A_1812
PR106 10mR_1/1W_2512
PC13 0.1u/25V_0603
PC15 0.1u/25V_0603
PC14 0.1u/16V
PC87 0.1u/16V
PU10B LM358
PR17 100K_1_0603
PC12 0.1u/10V X7R
PR11 11.3K_1_0603
PC6 4.7u/10V_0805
PR110 100K
I_CPU
10A/2.5V
PR19 8.25K_1_0603
PR18 10K_1_0603
PD16 UDZS9.1V
PR189 *0_0603
PD28 RB501V-40
+5V_AUX
PR108 *0 VID0
PR21 *0 VID1
PR43 *0 VID2
PR114 *0 VID3
PR44 *0 VID4
PR49 10K -> 100K
PR49 100K
PR117 *0
PQ41 2N7002
PC16 1n/50V_0603 X7R
PC100 4.7u/10V_0805 X5R
PC86 4.7u/10V_0805 X5R
PU2 MAX1937
VID4 VID3 VID2 VID1 VID0
PWRGD
EN
TIME
VPOS
REF
ILIM
GND
GNDS
FB
VCC VDD PGND
DH1 LX1 DL1 BST1 CS1 VLG CS2 BST2 DH2 LX2 DL2
PR50 *0
PR118 0
5,8 PWROK_CPU
5,31 CORE_ON
PR124 100K
PC93 47p/50V_0603 X7R
PR112 121K_1_0603
PC23 1u/6.3V_0603 X7R
PR47 33.2K_1_0603
PR46 71.5K_1_0603
PR48 200K_1_0603
PC26 4.7n/50V_0603 X7R
PC27 4.7n/50V_0603 X7R
PR111 2.2_0603
PC90 0.22u/10V_0603 X7R
PR116 200_0603
PC89 1n/50V_0603 X7R
PD17 RB501V-40
PD18 RB501V-40
PR20 2.2_0603
PC98 1n/50V_0603 X7R
PR122 200_0603
PR123 2.2_0603
PC101 0.22u/10V_0603 X7R
PQ6 2N7002
PQ7 2N7002
VCORE GND
PR53 100_1
PR51 100_1
PC25 *1n/50V_0603 X7R
5 VSS_SENSE
5 VCORE_SENSE
PR54 1M_0603
PR52 1M_0603
PQ57 RSS090N03
PQ55 RSS090N03
PQ56 RSS090N03
PQ50 IRF7832
PQ54 IRF7832
PQ52 IRF7832
PC43 0.1u/25V_0603
PC91 15u/25V POSCAP
PC84 47u/25V_10*12.5 OS-CON
PC44 10u/25V_1206 X5R/X6S
PD21 SK34A
PR126 2.2_0603
PC113 2200p/50V X7R
PL11 0.56uH_M104L
PC105 1500u/2.5V_10*12.5 NP-PSA
PC116 330u/2V SPCAP
PC40 330u/2V SPCAP
PC117 22u/6.3V_1206 X5R
CPU_CORE
PQ45 RSS090N03
PQ43 RSS090N03
PQ42 RSS090N03
PQ49 IRF7832
PQ48 IRF7832
PQ47 IRF7832
PC20 0.1u/25V_0603
PC119 15u/25V POSCAP
PC97 10u/25V_1206 X5R/X6S
PD19 SK34A
PR125 2.2_0603
PC102 2200p/50V X7R
PL10 0.56uH_M104L
PC125 1500u/2.5V_10*12.5 NP-PSA
PC41 330u/2V SPCAP
PC115 330u/2V SPCAP
PC109 22u/6.3V_1206 X5R
PC32 330u/2V SPCAP
PC39 330u/2V SPCAP
PC35 330u/2V SPCAP
PC34 330u/2V SPCAP
PC21 10u/25V_1206 X5R/X6S
PC118 10u/25V_1206 X5R/X6S
PC121 10u/25V_6.3*7 OS-CON
PC120 10u/25V_6.3*7 OS-CON
PC42 1u/25V_0805
PC88 1u/25V_0805
VCORE_SENSE
VSS_SENSE
S3 CPU_CORE POWER STATE
CORE_ON
PWROK_CPU
CPU_CORE
S0
HI
L -> HI
ON
S3
LOW
LOW
OFF
CPU_CORE Control from EC
UNIWILL COMPUTER CORP.
Title
CPUCORE_MAX1937
Size
Document Number
258KA0
Rev B
2445
Date: Tuesday, February 10, 2004
Sheet 36 of 42

258KA0 PWR BD REV: B

P/N: 35-UF3000-00B

MADE IN TAIWAN

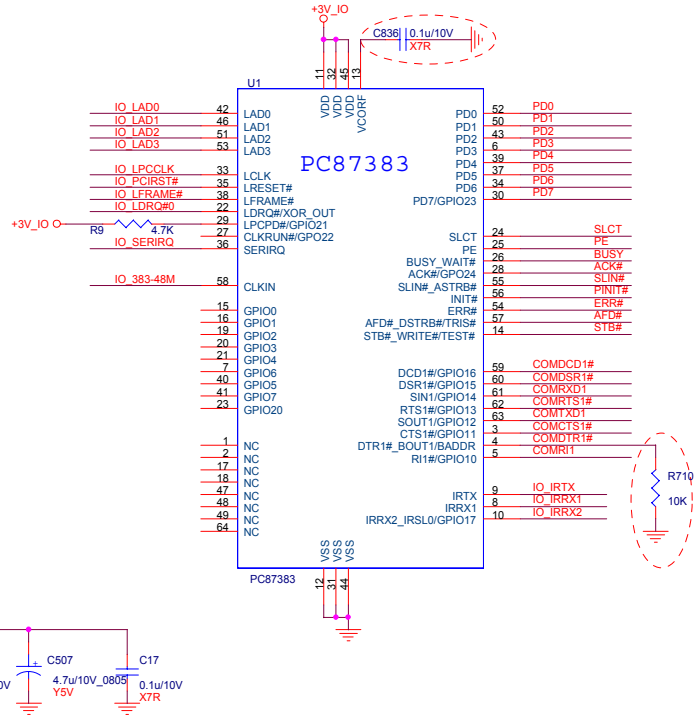


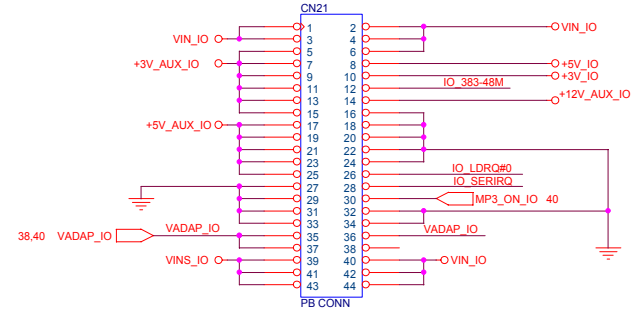


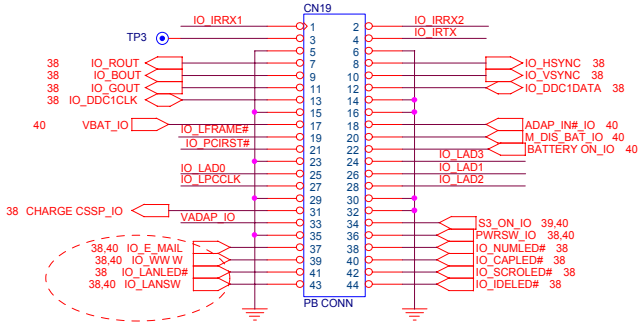


## PARALLEL PORT

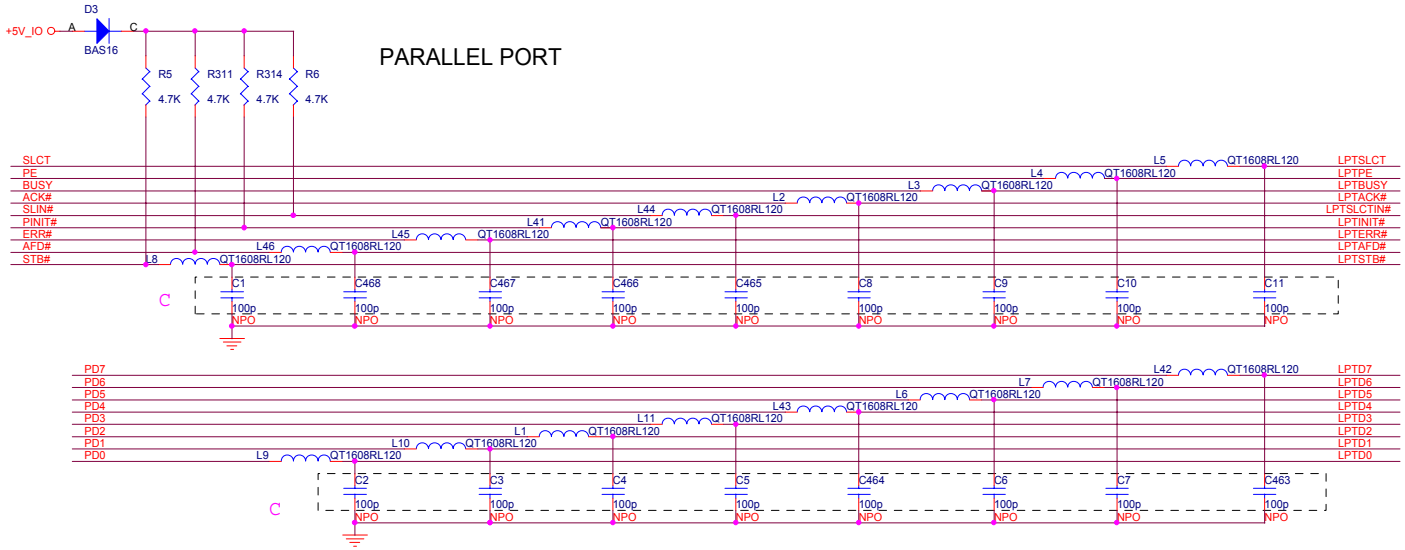


## COM PORT

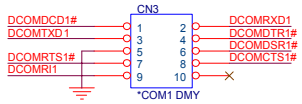


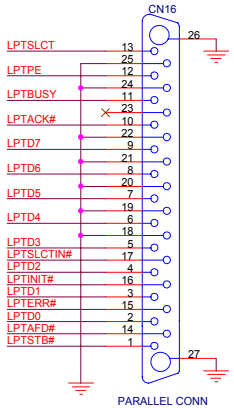


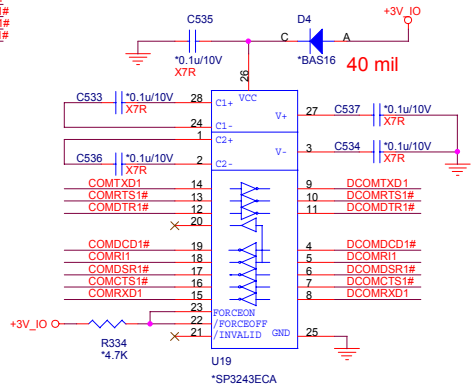


UNIWILL COMPUTER CORP.

| | | |
|---|---|---|
| Title | NS87383 & COM & LPT | |
| Size | Document Number 258KA0 | Rev B |
| Date: Tuesday, February 10, 2004 | Sheet 37 of 42 | |

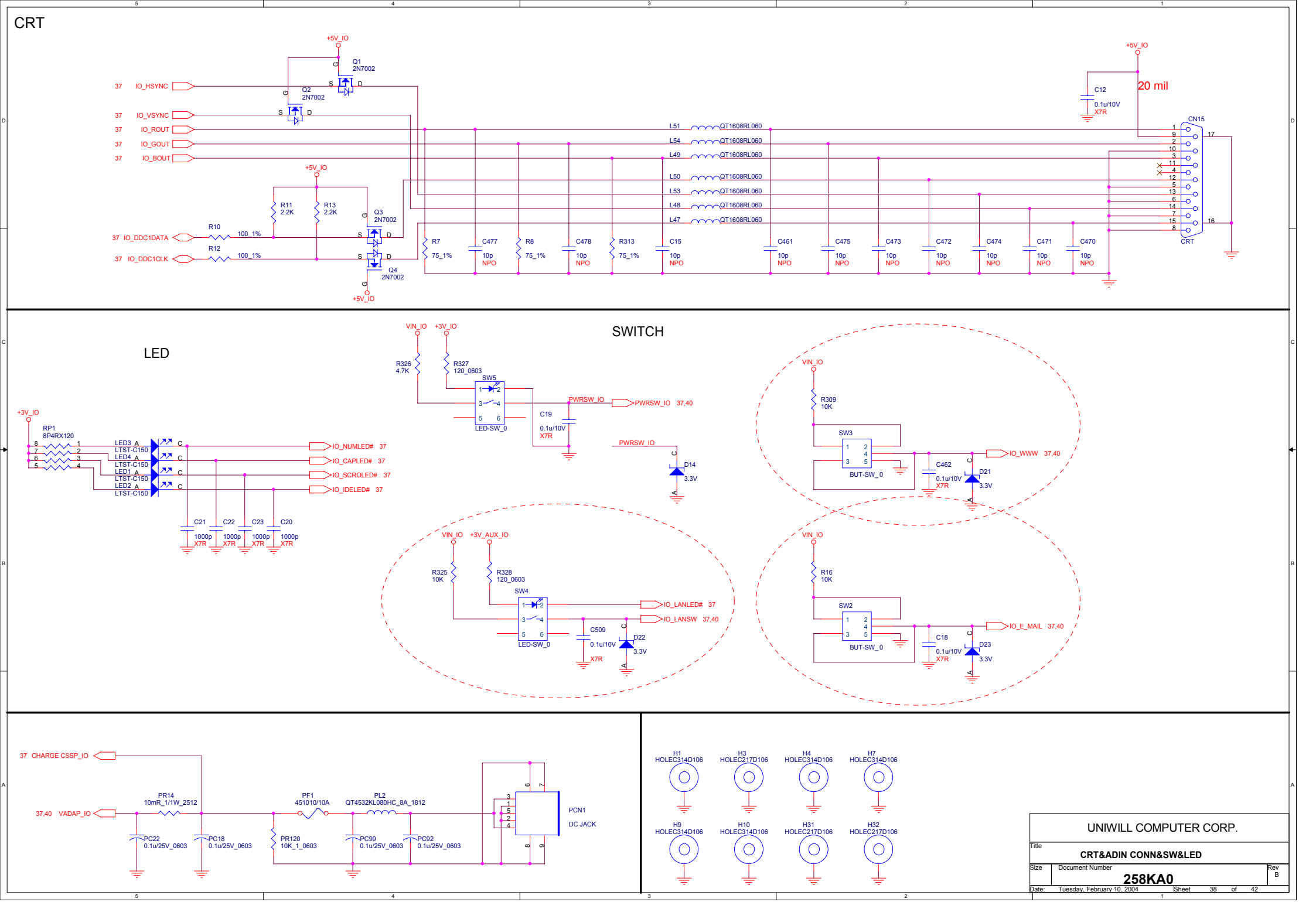
CRT
+5V_IO
Q1 2N7002
Q2 2N7002
Q3 2N7002
Q4 2N7002
37 IO_HSYNC
37 IO_VSYNC
37 IO_ROUT
37 IO_GOUT
37 IO_BOUT
37 IO_DDC1DATA
37 IO_DDC1CLK
R10 100_1%
R12 100_1%
R11 2.2K
R13 2.2K
R7 75_1%
R8 75_1%
R313 75_1%
C477 10p NPO
C478 10p NPO
C15 10p NPO
C461 10p NPO
C475 10p NPO
C473 10p NPO
C472 10p NPO
C474 10p NPO
C471 10p NPO
C470 10p NPO
L51 QT1608RL060
L54 QT1608RL060
L49 QT1608RL060
L50 QT1608RL060
L53 QT1608RL060
L48 QT1608RL060
L47 QT1608RL060
C12 0.1u/10V X7R
20 mil
CN15
CRT
LED
RP1 8P4RX120
LED3 A LTST-C150
LED4 A LTST-C150
LED1 A LTST-C150
LED2 A LTST-C150
IO_NUMLED# 37
IO_CAPLED# 37
IO_SCROLED# 37
IO_IDELED# 37
C21 1000p X7R
C22 1000p X7R
C23 1000p X7R
C20 1000p X7R
SWITCH
VIN_IO
+3V_IO
R326 4.7K
R327 120_0603
SW5
LED-SW_0
PWRSW_IO
PWRSW_IO 37,40
C19 0.1u/10V X7R
D14 3.3V
R309 10K
SW3
BUT-SW_0
C462 0.1u/10V X7R
D21 3.3V
IO_WWW 37,40
+3V_AUX_IO
R325 10K
R328 120_0603
SW4
IO_LANLED# 37
IO_LANSW 37,40
C509 0.1u/10V X7R
D22 3.3V
R16 10K
SW2
IO_E_MAIL 37,40
C18 0.1u/10V X7R
D23 3.3V
37 CHARGE CSSP_IO
37,40 VADAP_IO
PR14 10mR_1/1W_2512
PF1 451010/10A
PL2 QT4532KL080HC_8A_1812
PC22 0.1u/25V_0603
PC18 0.1u/25V_0603
PR120 10K_1_0603
PC99 0.1u/25V_0603
PC92 0.1u/25V_0603
PCN1
DC JACK
H1 HOLEC314D106
H3 HOLEC217D106
H4 HOLEC314D106
H7 HOLEC314D106
H9 HOLEC314D106
H10 HOLEC314D106
H31 HOLEC217D106
H32 HOLEC217D106
UNIWILL COMPUTER CORP.
Title
CRT&ADIN CONN&SW&LED
Size
Document Number
258KA0
Rev B
Date: Tuesday, February 10, 2004
Sheet 38 of 42

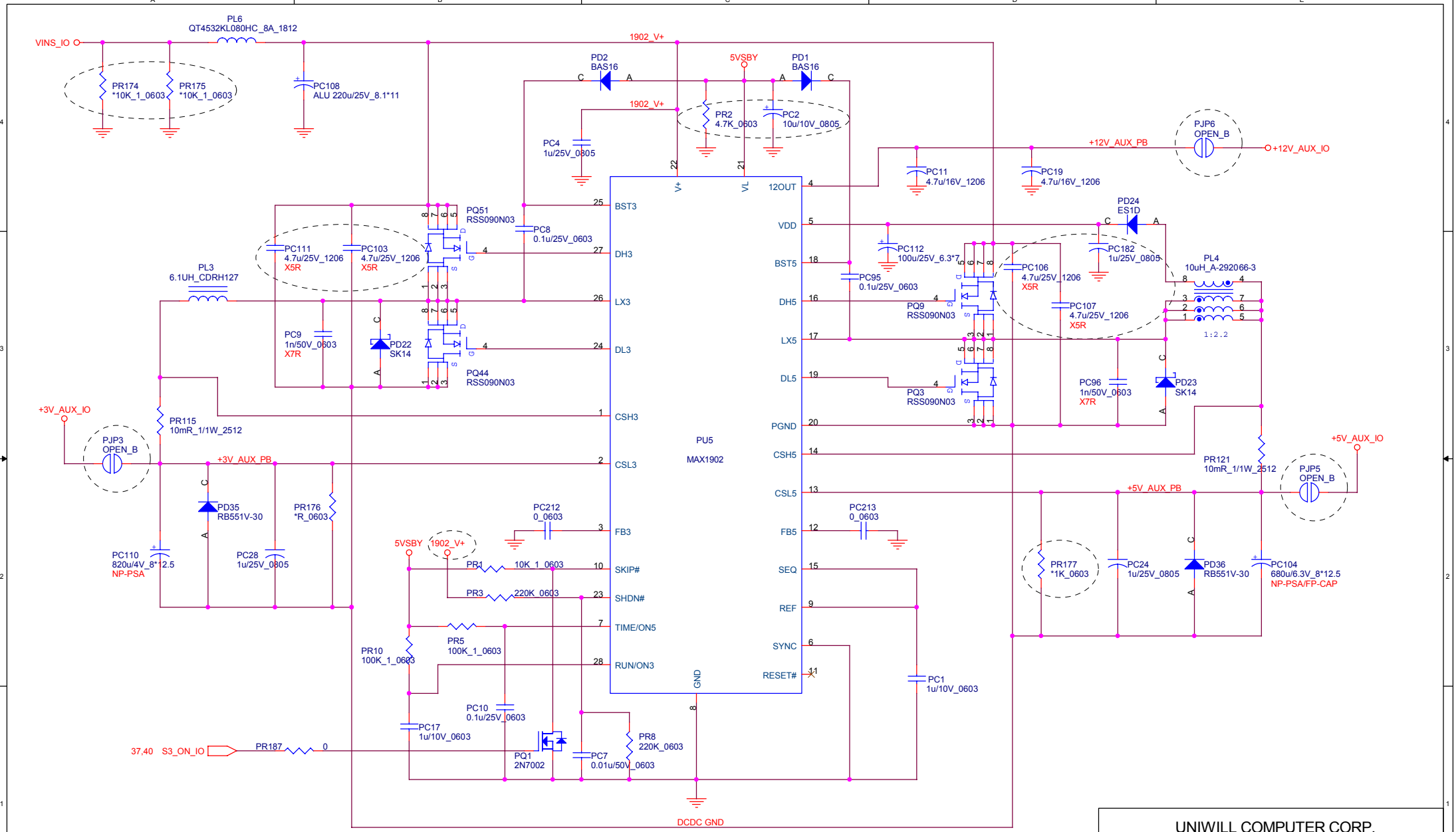


UNIWILL COMPUTER CORP.

Title: +5V_AUX & +3V_AUX &+12V

Size | Document Number: 258KA0 | Rev: B

Date: Tuesday, February 10, 2004 | Sheet 39 of 42

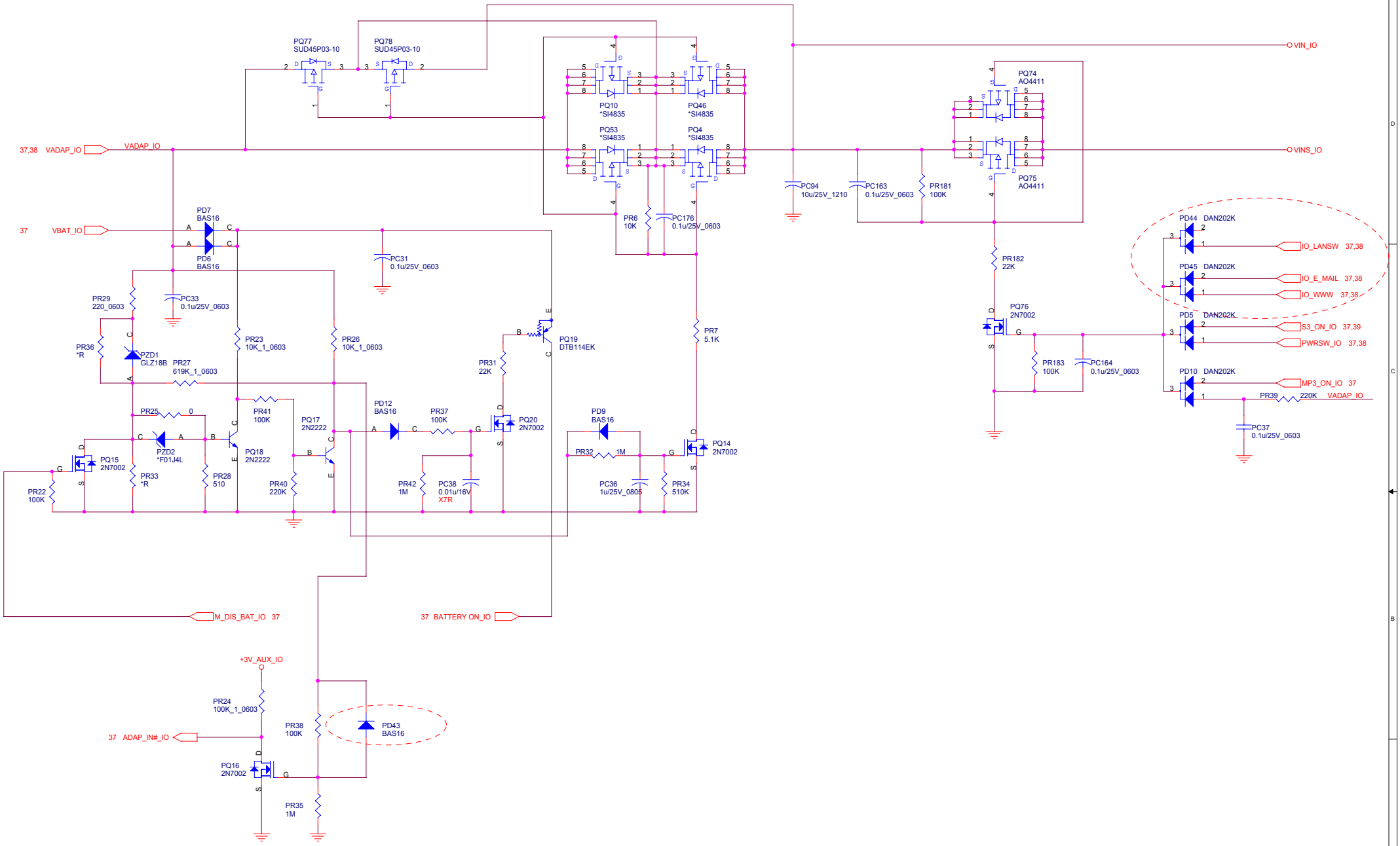


UNIWILL COMPUTER CORP.

Title: **ADAPTOR & BATTERY SELECT**

Size | Document Number: **258KA0** | Rev: B

Date: Tuesday, February 10, 2004 | Sheet 40 of 42

258SA0 CD-ROM TRANSFER BD REV: 01

P/N: 35-UD7020-01

MADE IN TAIWAN

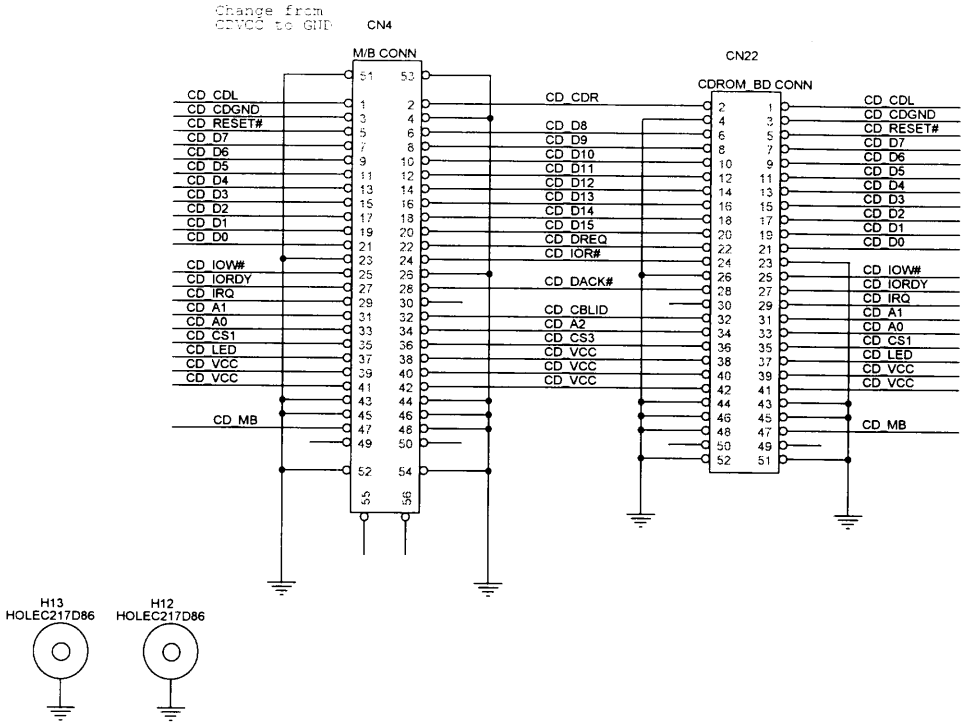


| | | | |
|---|---|---|---|
| UNIWILL COMPUTER CORP. | | | |
| Title | CDROM_TRANSFER_BD | | |
| Size | Document Number 2445 | 258KA0 | Rev 01 |
| Date: Tuesday, February 10, 2004 | Sheet 41 of 42 | | |

# A0 to B0 M/B change lists

1.Simplify power control the signal
Page32: Change net +2.5V_ON to +3V_ON
Remove PR74,PR100,PR101
Page34: Change net +1.2V_ON to +3V_ON
Remove PR135
Page35: Del net +1.8V_ON, Change net AGP_ON to +3V_ON
Remove PR152,PR171
Add PR153
2.Add total power circuit
Page33: Add PC74,PC77 0.1u/25V_0603, PC159 4.7u/10V_0805
Add PR88 11.3K_1_0603, PR95 100K, PR167 100K_1_0603
Add PU9 MAX4173F, PC75,PC76 0.1u/16V
3.Change M/B with P/B component the repetition rename
Page35: Rename PR176 to PR216
4.Solve when S3 AGP1.2V Disable, +2.5V_DDR voltage descend 0.2V
Page34: Change PL12 1.8uH_MPP to 2.4uH_MPP
Change PR58 11.3K_1_0603 to 10K_1_0603
Change PR63 21.5K_1_0603 to 1.33K_1_0603
Change PR77 1.33K_1_0603 to 21.5K_1_0603
Change PR78 10K_1_0603 to 11.3K_1_0603
Change PU4 ISL6225CA EN1(master) to EN2 (slave)
Rename PR79 to PR186
5.Improving CM8562 load full condition, PU11 IC surface temperature moment very heat
Page34: Add PR191 0_0603
Change PR138 net +3V_AUX to +2.5V_DDR
Change PU11 pin6 VCCA net +5V_AUX to +3V_AUX
6.Solve net +5V volatge leakage 1.7v when S3
Page36: Add PD28 RB501V-40
Del PR119 0_0603
7.Modify cpu power ok by H/W control
Page36: Change PR49 10K to 100K
Remove PR50
8.Modify the amd suggests vcore circuit
Page36: Change PR46 68.1K_1_0603 to 71.5K_1_0603
Change PR47 51.1K_1_0603 to 33.2K_1_0603
Del PR30,PR45,PR107,PR109,PR113

# A0 to B0 P/B change lists

258KA0 Rev.B0 power board is by 257SA0/SA1 Rev.B0 the modify
1.Change component footprint and net
Page39: Change PC2 10u/10V 1206 to 0805
Change PC103,PC106,PC107,PC111 4.7u/25V 1210 to 1206
Change PJP3,PJP5,PJP6 short jump to open jump
Change PR3 net VINS_IO to 1902+
2.Improving power loses and ripple noise
Page39: Add PC182 1u/25V_0805
Remove PR174,PR175,PR177
3.Improving fast plug in / pull out adapter no boot
Page39: Change PR2 5K_0603 to 4.7K_0603

9. Changed CPU of HDT Connector type
Page 05:Changed CN27 foot printer to CN26-S
add R428

10.Add new CLOCK circuit
Page 08: Add R719,R734
Add C966,C967 By EMI issue
Page 24:Add R713,R714
11.Add new PWROK & PWROK_CPU circuit
Page 08 : New Add R720 ,R721
Changed net. +2.5V to +3V
Add BOM R720,R721,R533,R529,R523,,R535,Q15,Q16
Remove BOM R528,R522,R534,Q17,Q18
12. Add new pull up circuit for SMBUS to solved couldn't found the DDR memory of SPD information when S3 resume and system restart
Page 09: Add R717,R718

13. Solve the DDR400 512MB *16 cell test fail
Page 10: Remove BOM R67,R68,R121,R125
14. New add AUXOK circuit to solve power on sequence too fast
Page 23. Add R715,R716,C963
15. Modify BOM
Page 23: Remove R299
Add R298
16. Solve the USB2.0 IF_LOGO fail
Page 24: Changed R295 of value to 357_1%
17. Reserved main power source +5V_AUX for USB Connect
Page 25: New add power net. +5V_AUX for USB connector
to R729,R731,R733
Add BOM R728,R730,R732
18. Solve the RTL8201CL LAN connection fail
Page 26: Change R209 from 5.6K 1% to 2K 1%
Add R239
Add C303,C318
New connect PT1 pin 10, 15 to net. PWROUT

19. Solve can't boot from battery only and restart unsatble
Page 26: Remove R538,R545,R546,R547,Q19,Q20

20. Add for Card BUS MSpro memory type of circuit
Page 28: CN27 Pin 14 connect to Net. MC1D1
CN27 Pin 16 connect to Net. MC1D2
CN27 Pin 18 connect to Net. MC1D3

21. Solve the AUDIO broken Voice when start windowsXP or exit windows
Page 29: changed R600 to 9.01K 1%

22. Reserved ground plane circuit for EMI debug issue
Page 29: Add R722,R723,R724,R725,R726,R727

23. Solve the AGP Fan runing unstable
Page 30. New add C965
Move C353 close to CN33 (AGP Fan connector)
24. Reserved for EC controller of GPI/O pin when that pin are necessary
Page 31: Add RP87 ,R711, R712

25. Provide +2.5V_DIMM_ON have active stable circuit
Page 31: Add U34,U35,R735

26. Change power source for Net. S3AUXSW#
Page 31 : Changed R627 power source from +3V to +3V_AUX

| | | |
|---|---|---|
| UNIWILL COMPUTER CORP. | | |
| Title: CHANGE NOTICE | | |
| Size | Document Number: 258KA0 | Rev: B |
| | 2445 | |
| Date: Tuesday, February 10, 2004 | Sheet 42 of 42 | |