# 8S661FXMTIU-IU Schematics

Revi

淘本本 TBenBen.com


| SHEET | TITLE |
|---|---|
| 1 | COVER SHEET |
| 2 | BOM & PCB MODIFY HISTORY |
| 3 | BLOCK DIAGRAM |
| 4,5,6 | INTEL CPU_WMT_478 |
| 7-10 | SIS661FX (NORTH BRIDGE) HOST; DDR; AGP,HYPER ZIP |
| 11-14 | SIS964L (SOUTH BIRDGE) |
| 15 | CLOCK GENERATOR (ICS952018AF), BUFFER(ICS93722) |
| 16,17 | DDR SDRAM DIMMS 1,2 |
| 18 | AGP SLOT |
| 19 | PCI SLOT 1,2,3 |
| 20 | IDE,FRONT USB,PCIRST# |
| 21 | LPCIO_IT8705 |
| 22 | BIOS |
| 23 | COM,PRT,FDD,KB/MS,IR |
| 24 | AC 97 ALC655 |
| 25 | AUDIO JACK,SPDIF |
| 26 | FAN, IR |
| 27 | PANEL,STR LED,FANS ,CPU GN |
| 28 | VCORE PWM FAN5019 + FAN5009 |
| 29 | VDDQ,VCC18,VTT_GMCH DC POWER |
| 30 | ATX CONN, GPIO LIST |
| 31 | DDR POWER |

| SHEET | TITLE |
|---|---|
| 32 | RTL8100C 10/100 LAN |
| 33 | VGA CONNECTOR |
| | |


PCB Size: 244*230 mm

GIGABYTE

| | | |
|---|---|---|
| Title | COVER SHEET | |
| Size Custom | Document Number 8S661FXMTIU-IU | Rev 1.0 |
| Date: Thursday, June 16, 2005 | Sheet 1 of 33 | |

# Model Name: 8S661FXMTIU-IU

# Version: 1.0

## Component value change history

| Date | Change Item | Reason |
|---|---|---|
| 2005/05/04 0.1 | First Release | |
| 2005/06/15 1.0 | PVT BOM | |

## Circuit or PCB layout change for next version

| Date | Change Item | Reason |
|---|---|---|

GIGABYTE

| | | |
|---|---|---|
| Title | BOM & PCB MODIFY HISTORY | |
| Size Custom | Document Number 8S661FXMTIU-IU | Rev 1.0 |
| Date: Thursday, June 16, 2005 | Sheet 2 of 33 | |

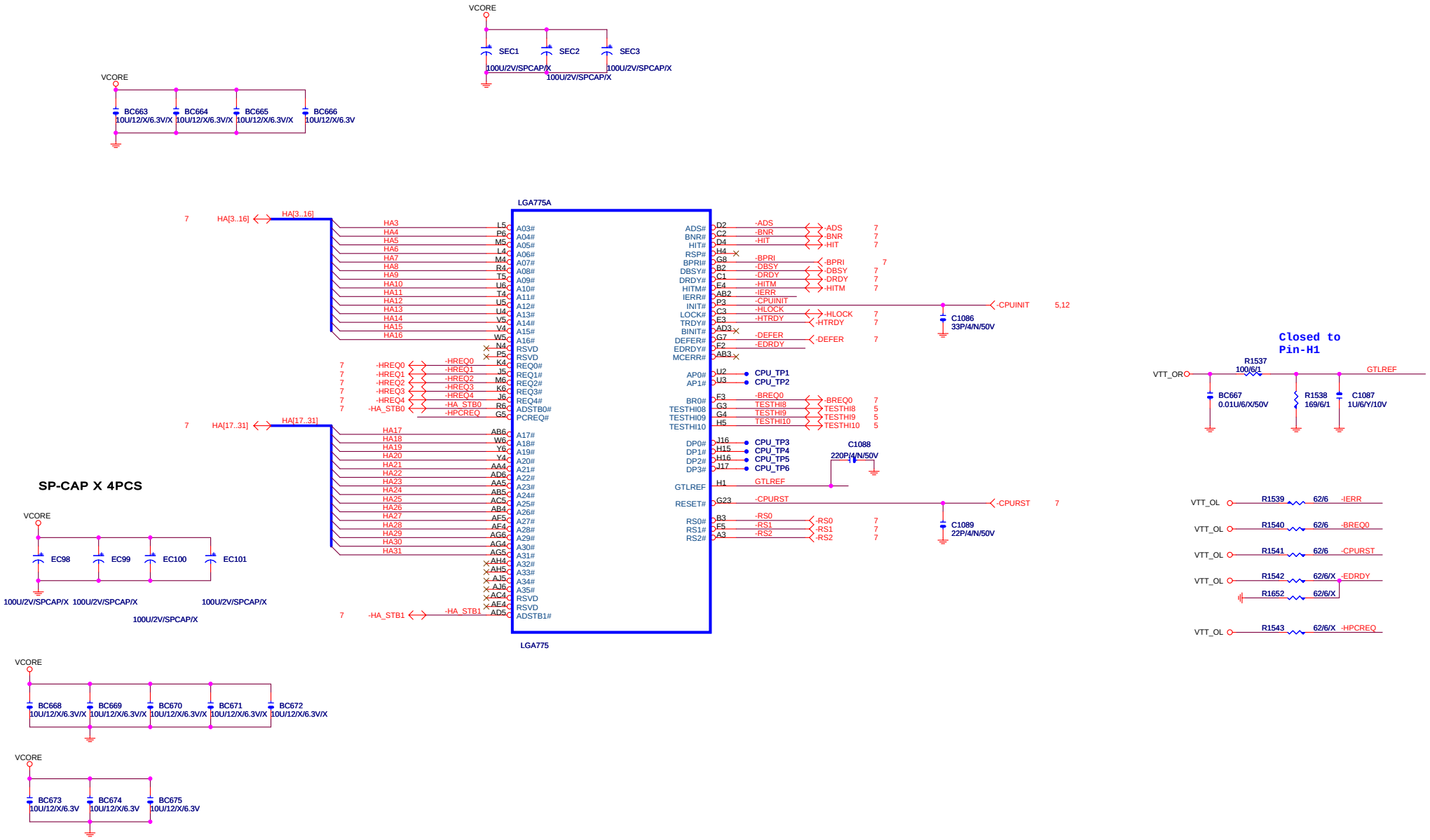


| | | | |
|---|---|---|---|
| GIGABYTE | | | |
| Title | P4_LGA775-A | | |
| Size Custom | Document Number | 8S661FXMTIU-IU | Rev 1.0 |
| Date: Thursday, June 16, 2005 | Sheet 3 of 33 | | |

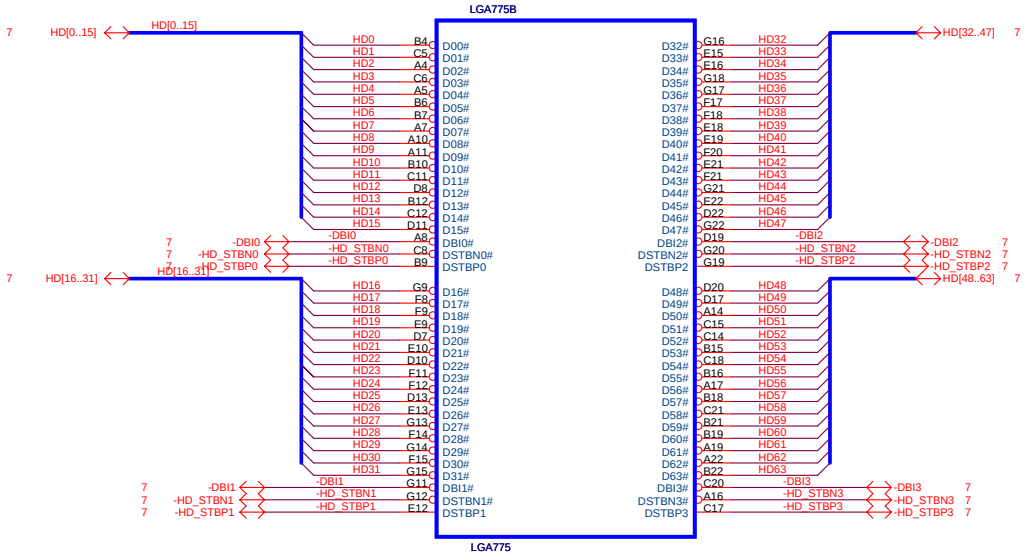


**GIGABYTE**

| | | |
|---|---|---|
| Title | P4_LGA775-C | |
| Size Custom | Document Number 8S661FXMTIU-IU | Rev 1.0 |
| Date: Thursday, June 16, 2005 | Sheet 4 of 33 | |

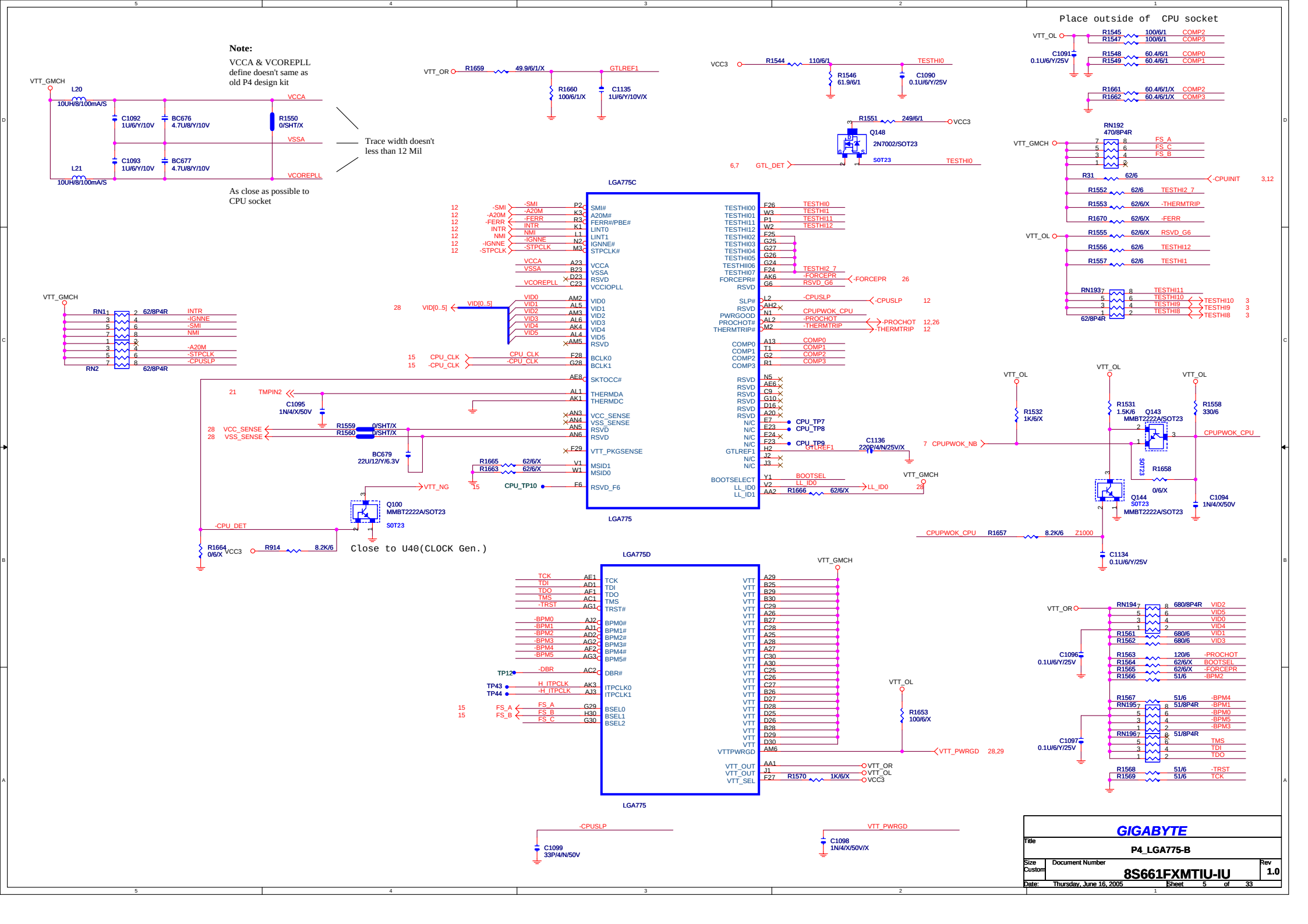
Note:
VCCA & VCOREPLL define doesn't same as old P4 design kit
Trace width doesn't less than 12 Mil
As close as possible to CPU socket
Place outside of CPU socket
Close to U40(CLOCK Gen.)
LGA775C
LGA775
LGA775D
GIGABYTE
Title
P4_LGA775-B
Size
Custom
Document Number
8S661FXMTIU-IU
Rev
1.0
Date: Thursday, June 16, 2005
Sheet 5 of 33

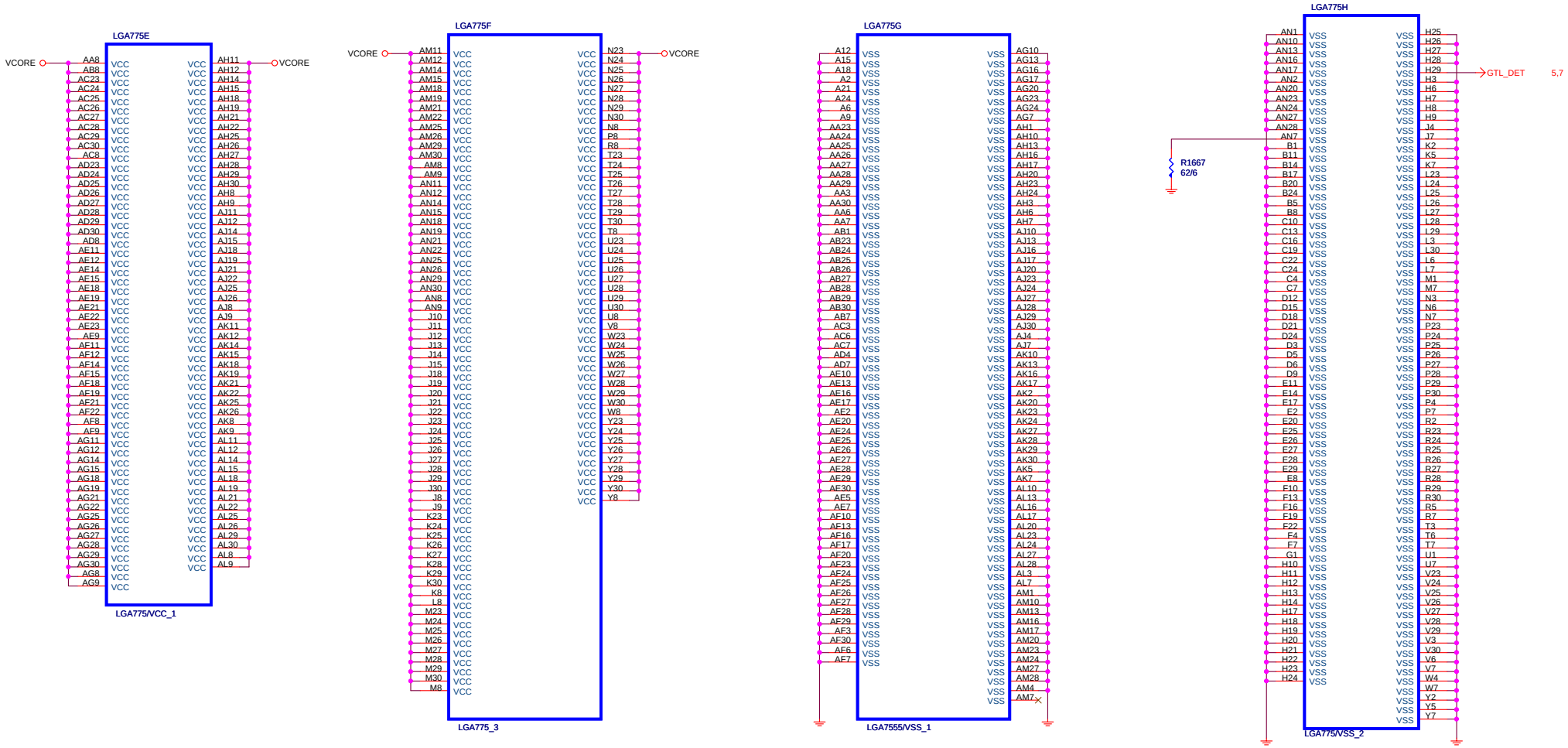


**GIGABYTE**

| | | |
|---|---|---|
| Title | P4_LGA775-D | |
| Size: Custom | Document Number: 8S661FXMTIU-IU | Rev: 1.0 |
| Date: Thursday, June 16, 2005 | Sheet 6 of 33 | |

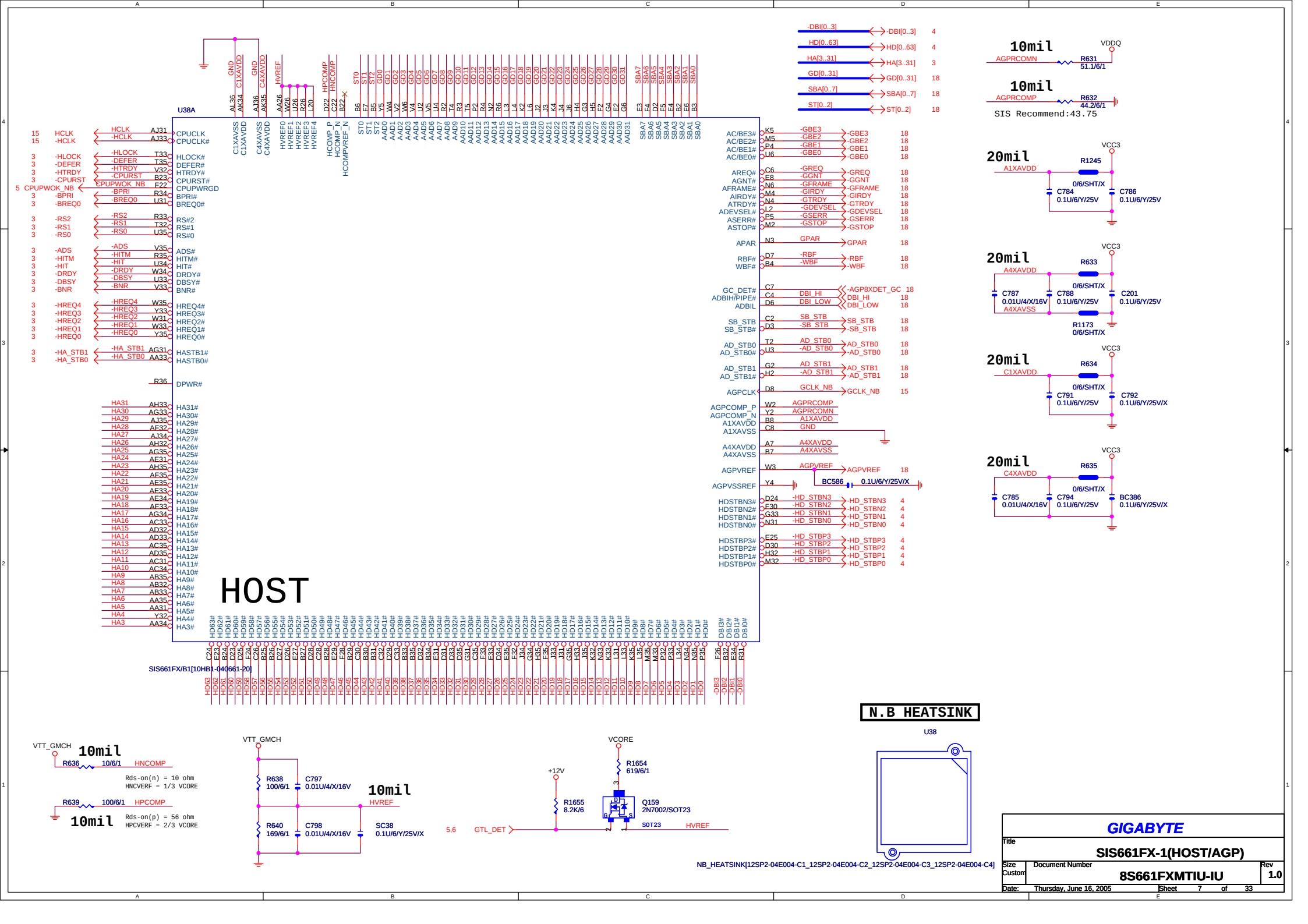


GIGABYTE

Title: SIS661FX-1(HOST/AGP)

Size: Custom | Document Number: 8S661FXMTIU-IU | Rev: 1.0

Date: Thursday, June 16, 2005 | Sheet 7 of 33

# DDR MD DAMPPING

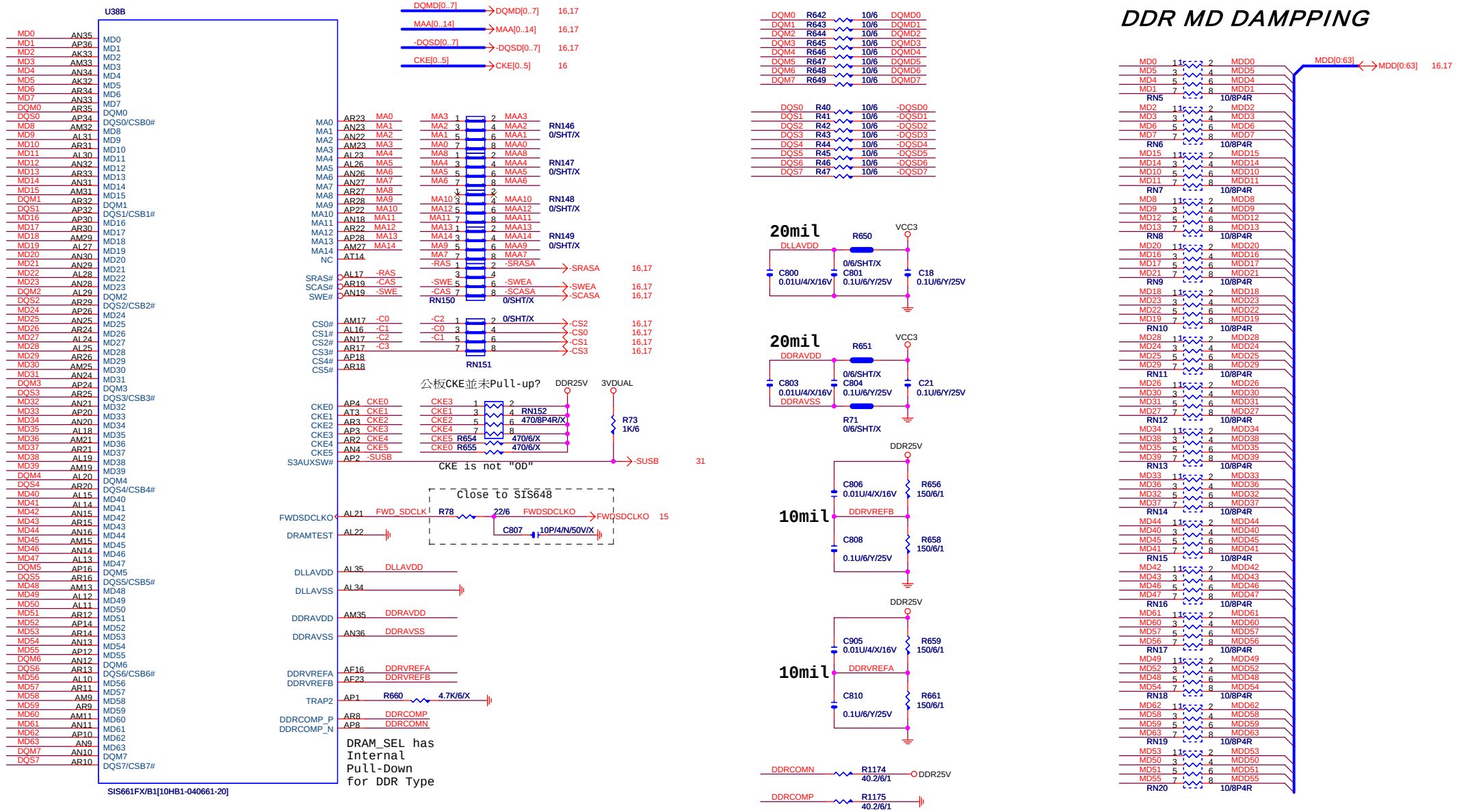


-SUSB: S3=Low

-SUSB: S0,S1,S5=Low

| | |
|---|---|
| GIGABYTE | |
| Title | SIS661FX-2(DDR) |
| Size Custom | Document Number 8S661FXMTIU-IU Rev 1.0 |
| Date: Thursday, June 16, 2005 | Sheet 8 of 33 |

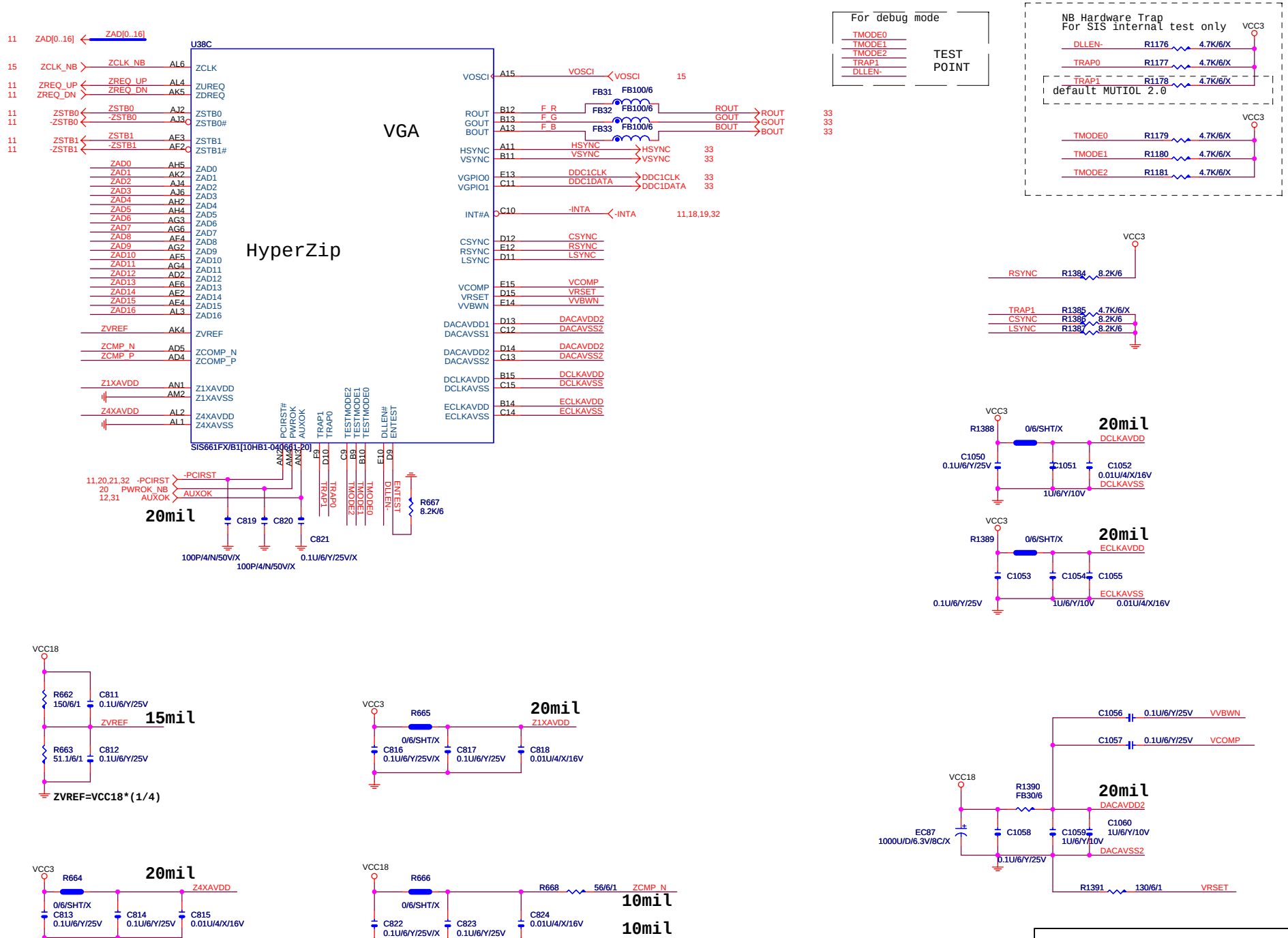


| | | | |
|---|---|---|---|
| GIGABYTE | | | |
| Title | SIS661FX-3(HYPER ZIP) | | |
| Size Custom | Document Number 8S661FXMTIU-IU | | Rev 1.0 |
| Date: Thursday, June 16, 2005 | Sheet 9 of 33 | | |

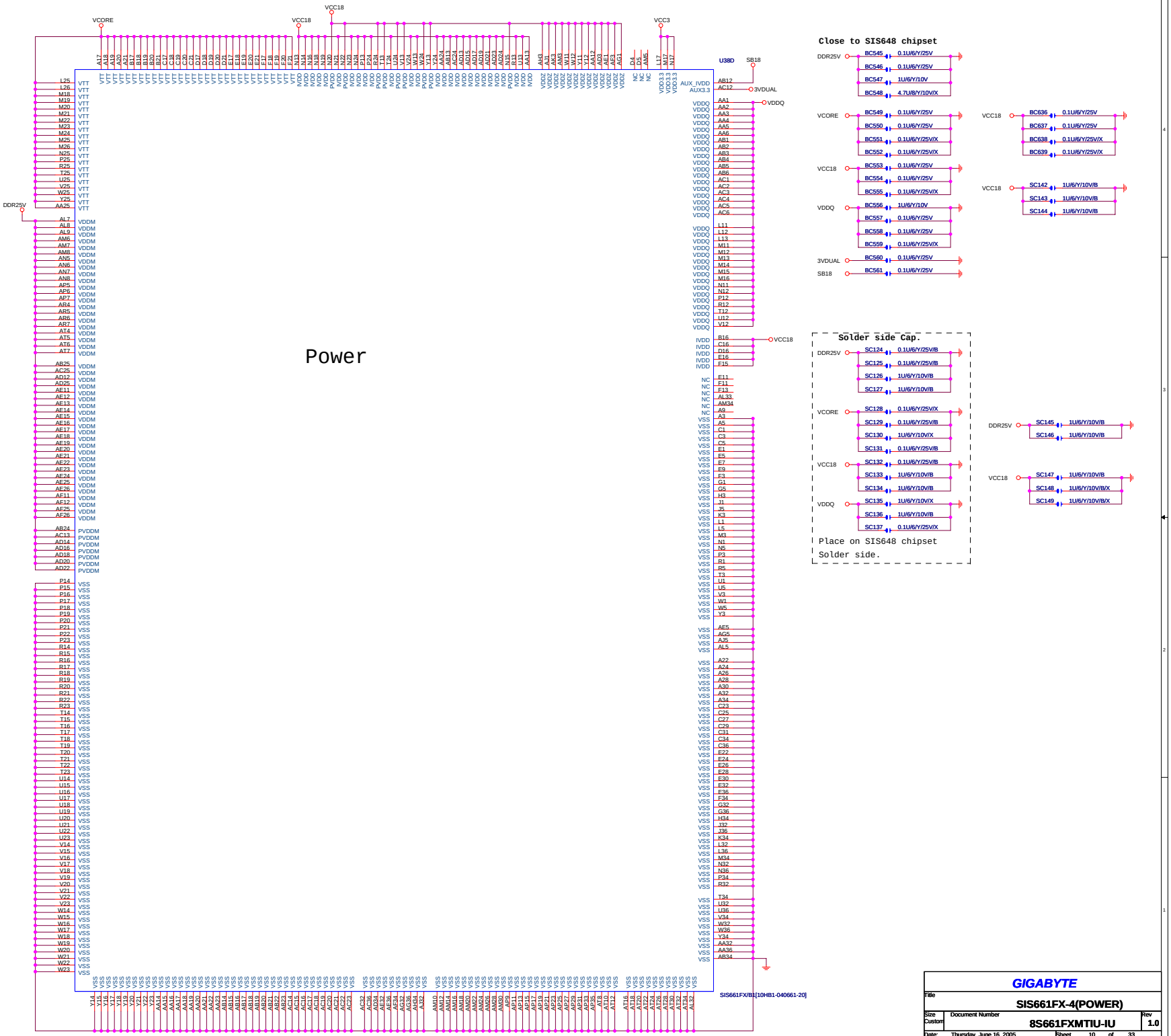


| | |
|---|---|
| GIGABYTE | |
| Title | SIS661FX-4(POWER) |
| Size / Custom | Document Number 8S661FXMTIU-IU |
| Rev | 1.0 |
| Date: Thursday, June 16, 2005 | Sheet 10 of 33 |

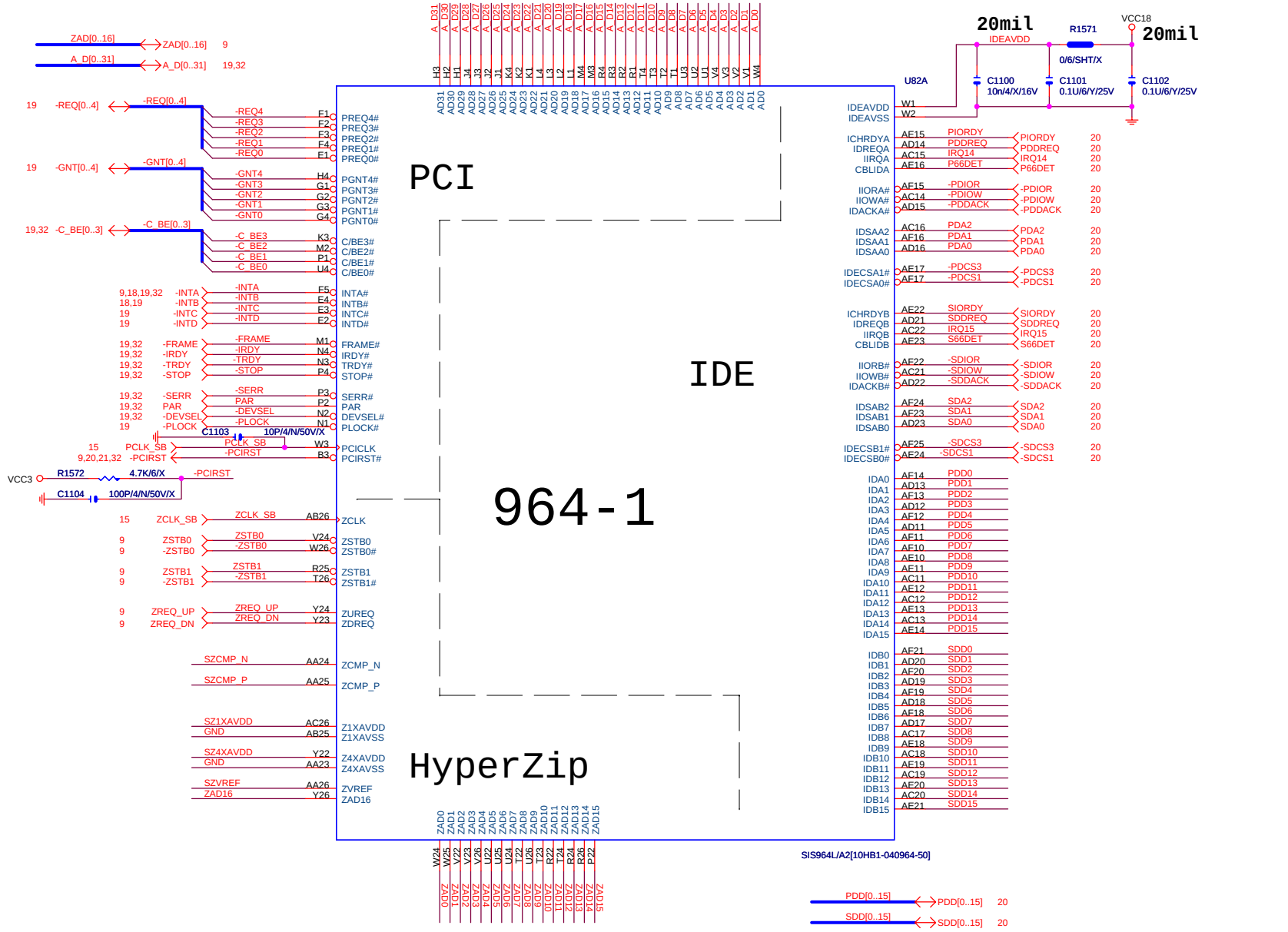


GIGABYTE

Title: SIS964-1(HP ZIP,PCI,IDE)

Size: Custom | Document Number: 8S661FXMTIU-IU | Rev: 1.0

Date: Thursday, June 16, 2005 | Sheet 11 of 33

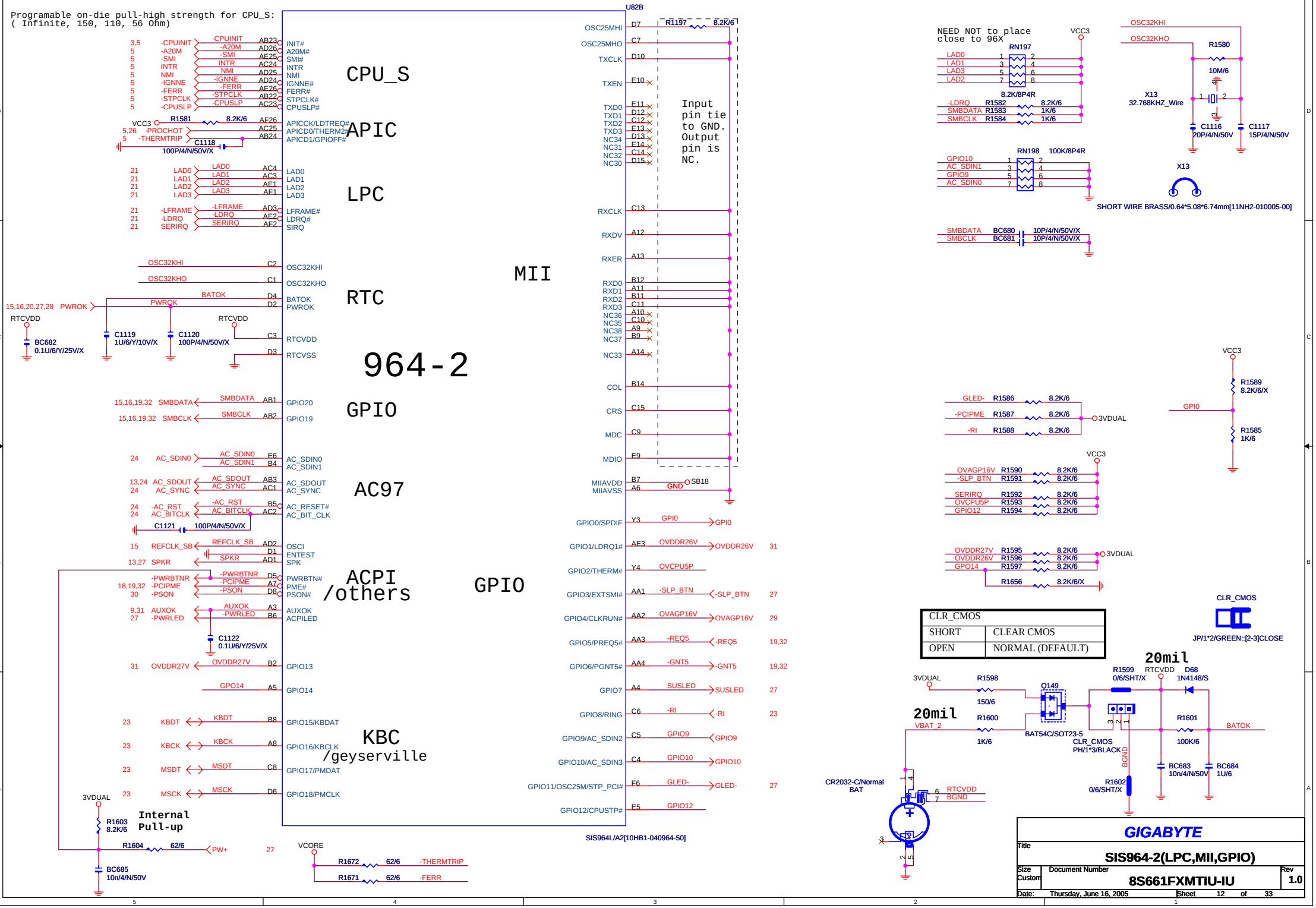
Programable on-die pull-high strength for CPU_S:
( Infinite, 150, 110, 56 Ohm)
U82B
CPU_S
APIC
LPC
RTC
964-2
GPIO
AC97
ACPI
/others
KBC
/geyserville
MII
GPIO
Input pin tie to GND. Output pin is NC.
Internal Pull-up
SIS964L/A2[10HB1-040964-50]
NEED NOT to place close to 96X
SHORT WIRE BRASS/0.64*5.08*6.74mm[11NH2-010005-00]
CLR_CMOS
JP/1*2/GREEN::[2-3]CLOSE
20mil
CR2032-C/Normal BAT
GIGABYTE
Title
SIS964-2(LPC,MII,GPIO)
Size Custom
Document Number
8S661FXMTIU-IU
Rev 1.0
Date: Thursday, June 16, 2005
Sheet 12 of 33

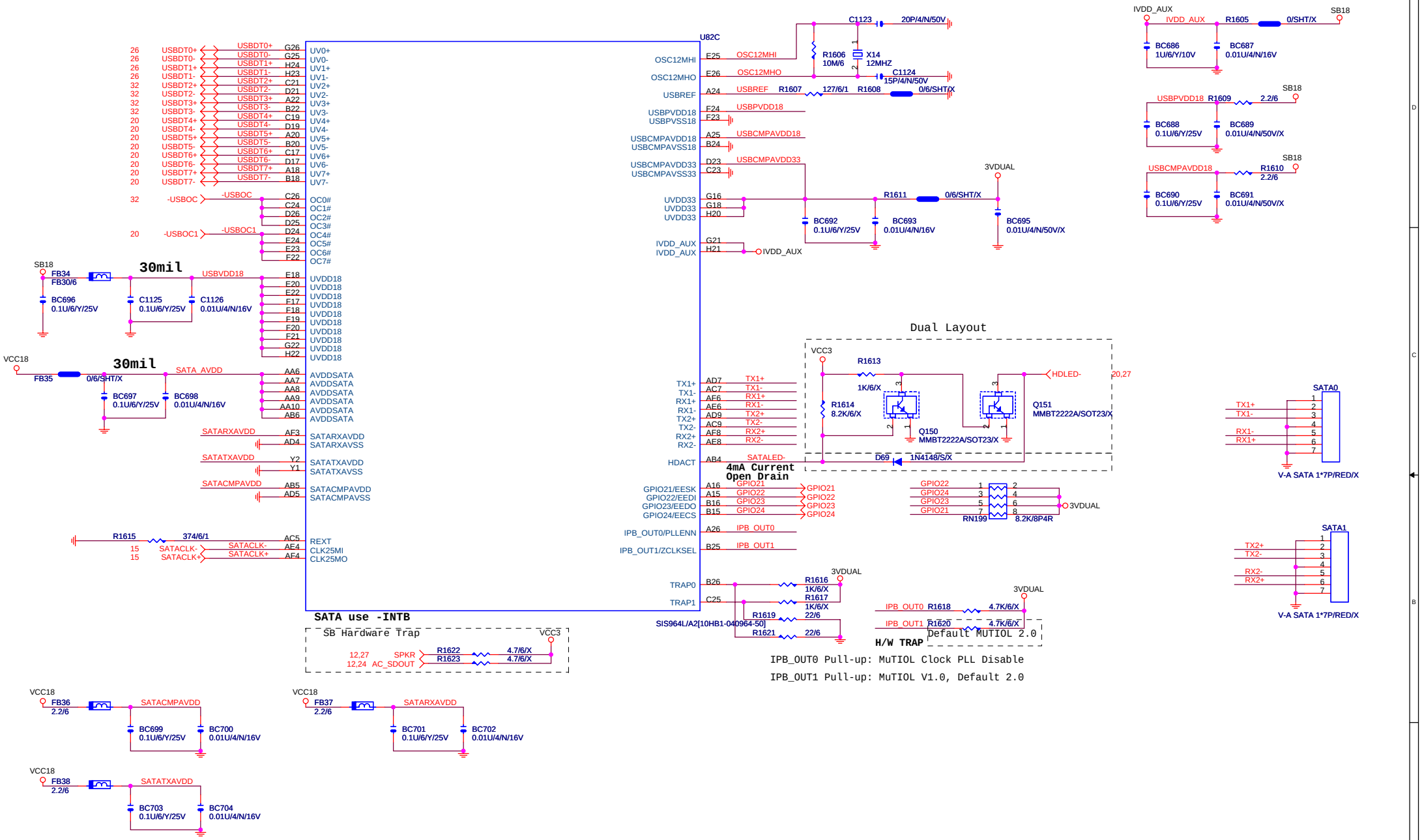


GIGABYTE

Title: SIS964-3(USB2.0, SATA)

Size: Custom | Document Number: 8S661FXMTIU-IU | Rev: 1.0

Date: Thursday, June 16, 2005 | Sheet 13 of 33

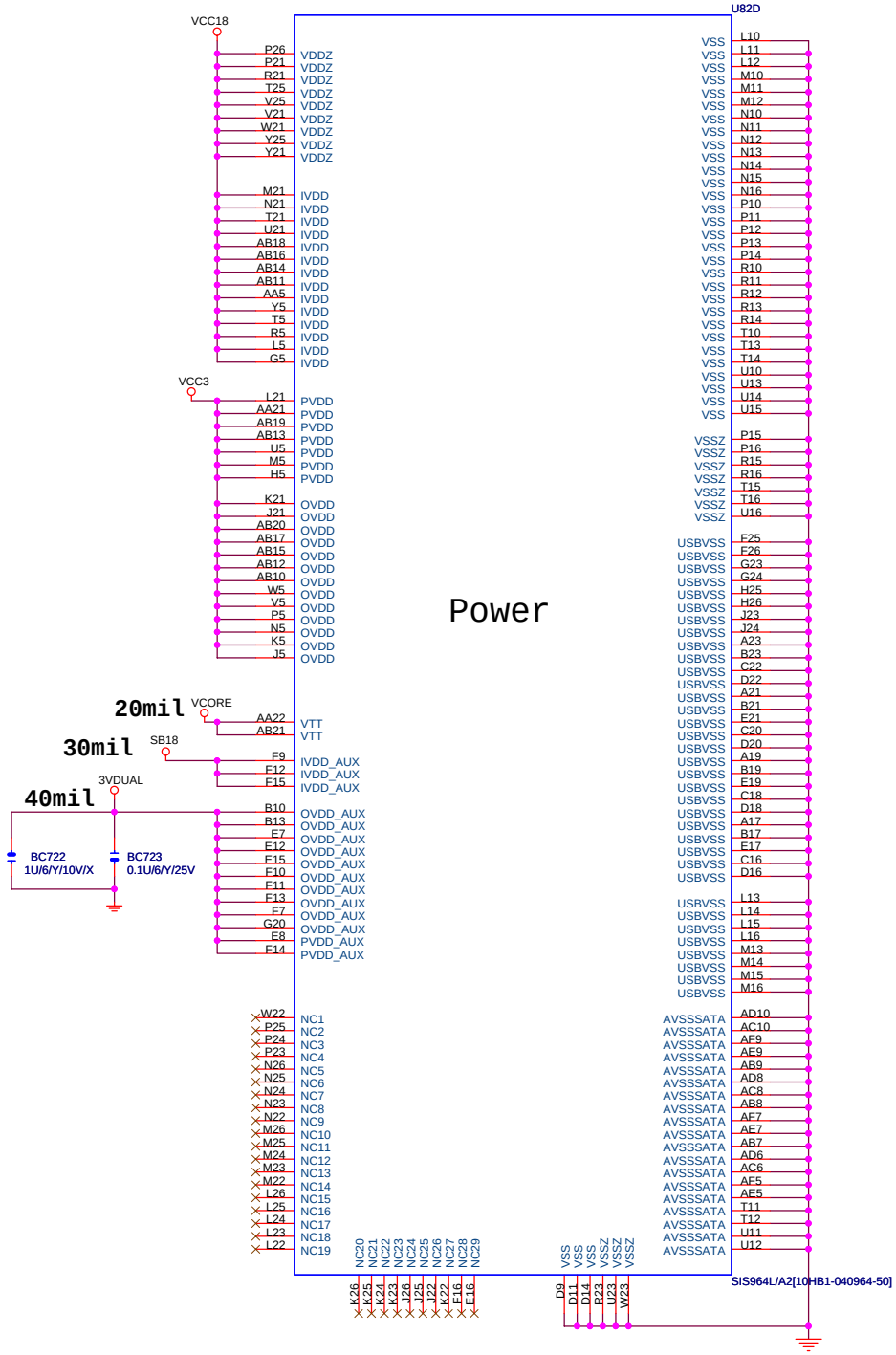


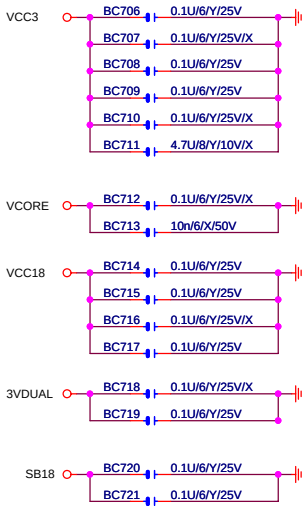


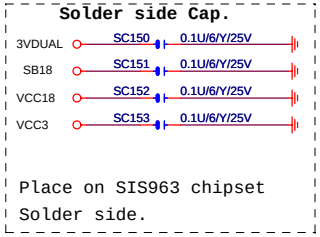


| | | |
|---|---|---|
| GIGABYTE | | |
| Title | SIS964-4(POWER) | |
| Size Custom | Document Number 8S661FXMTIU-IU | Rev 1.0 |
| Date: Thursday, June 16, 2005 | Sheet 14 of 33 | |

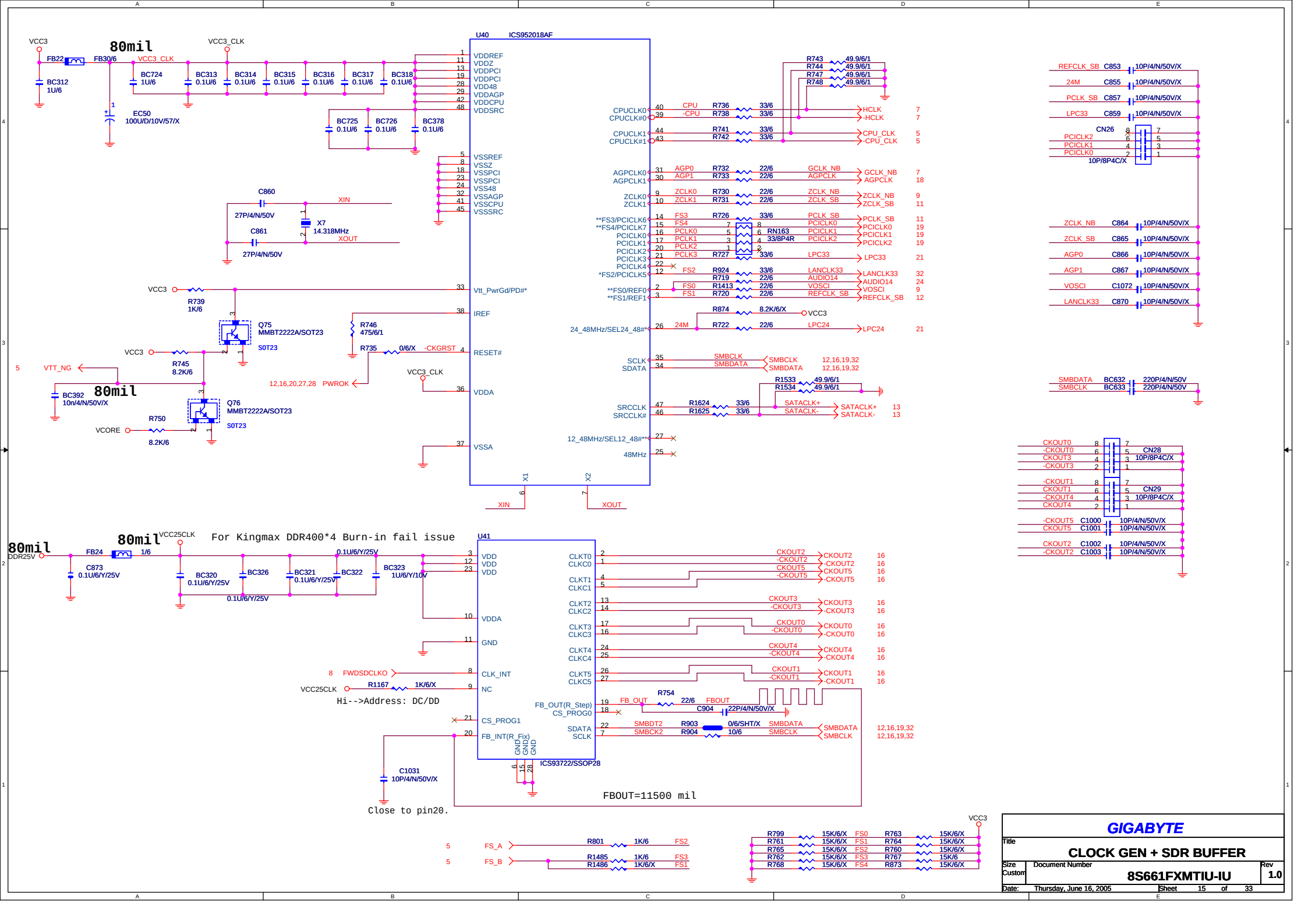
U40 ICS952018AF
VCC3
80mil
VCC3_CLK
FB22
FB30/6
BC312 1U/6
BC724 1U/6
BC313 0.1U/6
BC314 0.1U/6
BC315 0.1U/6
BC316 0.1U/6
BC317 0.1U/6
BC318 0.1U/6
EC50 100U/D/10V/57/X
BC725 0.1U/6
BC726 0.1U/6
BC378 0.1U/6
VDDREF
VDDZ
VDDPCI
VDDPCI
VDD48
VDDAGP
VDDCPU
VDDSRC
VSSREF
VSSZ
VSSPCI
VSSPCI
VSS48
VSSAGP
VSSCPU
VSSSRC
C860 27P/4/N/50V
C861 27P/4/N/50V
X7 14.318MHz
XIN
XOUT
R739 1K/6
Q75 MMBT2222A/SOT23
SOT23
R746 475/6/1
R735 0/6/X
-CKGRST
Vtt_PwrGd/PD#*
IREF
RESET#
VDDA
VSSA
VTT_NG
R745 8.2K/6
BC392 10n/4/N/50V/X
12,16,20,27,28 PWROK
VCC3_CLK
Q76 MMBT2222A/SOT23
R750 8.2K/6
VCORE
CPUCLK0 CPU R736 33/6 HCLK
CPUCLK#0 -CPU R738 33/6 -HCLK
CPUCLK1 R741 33/6 CPU_CLK
CPUCLK#1 R742 33/6 -CPU_CLK
R743 49.9/6/1
R744 49.9/6/1
R747 49.9/6/1
R748 49.9/6/1
AGPCLK0 AGP0 R732 22/6 GCLK_NB
AGPCLK1 AGP1 R733 22/6 AGPCLK
ZCLK0 ZCLK0 R730 22/6 ZCLK_NB
ZCLK1 ZCLK1 R731 22/6 ZCLK_SB
**FS3/PCICLK6 FS3 R726 33/6 PCLK_SB
**FS4/PCICLK7 FS4
PCICLK0 PCLK0
PCICLK1 PCLK1
PCICLK2 PCLK2
PCICLK3 PCLK3 R727 33/6 LPC33
PCICLK4
*FS2/PCICLK5 FS2 R924 33/6 LANCLK33
R719 22/6 AUDIO14
**FS0/REF0 FS0 R1413 22/6 VOSCI
**FS1/REF1 FS1 R720 22/6 REFCLK_SB
RN163 33/8P4R
24_48MHz/SEL24_48#* 24M R874 8.2K/6/X VCC3
R722 22/6 LPC24
SCLK SMBCLK SMBCLK 12,16,19,32
SDATA SMBDATA SMBDATA 12,16,19,32
R1533 49.9/6/1
R1534 49.9/6/1
SRCCLK R1624 33/6 SATACLK+
SRCCLK# R1625 33/6 SATACLK-
12_48MHz/SEL12_48#**
48MHz
REFCLK_SB C853 10P/4/N/50V/X
24M C855 10P/4/N/50V/X
PCLK_SB C857 10P/4/N/50V/X
LPC33 C859 10P/4/N/50V/X
CN26 10P/8P4C/X
ZCLK_NB C864 10P/4/N/50V/X
ZCLK_SB C865 10P/4/N/50V/X
AGP0 C866 10P/4/N/50V/X
AGP1 C867 10P/4/N/50V/X
VOSCI C1072 10P/4/N/50V/X
LANCLK33 C870 10P/4/N/50V/X
SMBDATA BC632 220P/4/N/50V
SMBCLK BC633 220P/4/N/50V
CN28 10P/8P4C/X
CN29 10P/8P4C/X
-CKOUT5 C1000 10P/4/N/50V/X
CKOUT5 C1001 10P/4/N/50V/X
CKOUT2 C1002 10P/4/N/50V/X
-CKOUT2 C1003 10P/4/N/50V/X
80mil
DDR25V
VCC25CLK
For Kingmax DDR400*4 Burn-in fail issue
FB24 1/6
C873 0.1U/6/Y/25V
BC320 0.1U/6/Y/25V
BC326 0.1U/6/Y/25V
BC321 0.1U/6/Y/25V
BC322 0.1U/6/Y/25V
BC323 1U/6/Y/10V
U41
VDD
VDDA
GND
CLK_INT
NC
CS_PROG1
FB_INT(R_Fix)
CLKT0 CLKC0
CLKT1 CLKC1
CLKT2 CLKC2
CLKT3 CLKC3
CLKT4 CLKC4
CLKT5 CLKC5
FB_OUT(R_Step)
CS_PROG0
SDATA
SCLK
FWDSDCLKO
R1167 1K/6/X
Hi-->Address: DC/DD
R754 22/6 FBOUT
C904 22P/4/N/50V/X
SMBDT2 R903 0/6/SHT/X SMBDATA
SMBCK2 R904 10/6 SMBCLK
C1031 10P/4/N/50V/X
ICS93722/SSOP28
FBOUT=11500 mil
Close to pin20.
FS_A R801 1K/6 FS2
FS_B R1485 1K/6 FS3
R1486 1K/6/X FS1
R799 15K/6/X FS0
R761 15K/6/X FS1
R765 15K/6/X FS2
R762 15K/6/X FS3
R768 15K/6/X FS4
R763 15K/6/X
R764 15K/6/X
R760 15K/6/X
R767 15K/6
R873 15K/6/X
GIGABYTE
Title
CLOCK GEN + SDR BUFFER
Size Custom
Document Number
8S661FXMTIU-IU
Rev 1.0
Date: Thursday, June 16, 2005
Sheet 15 of 33

# DDR SDRAM 1,2

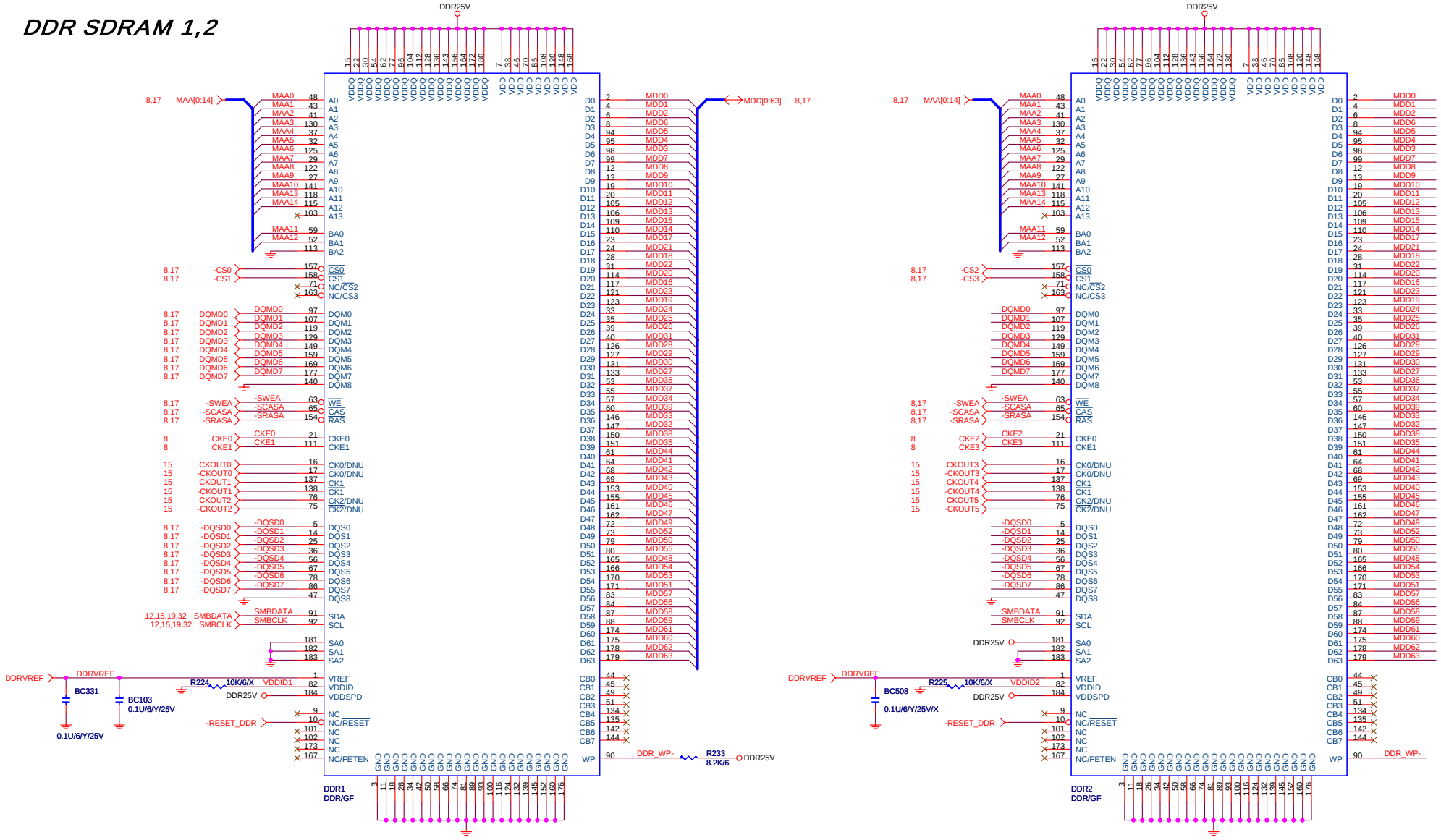


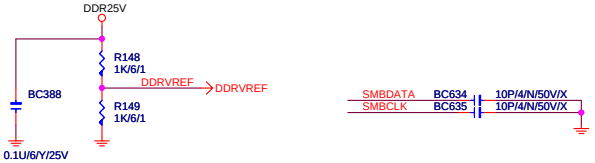


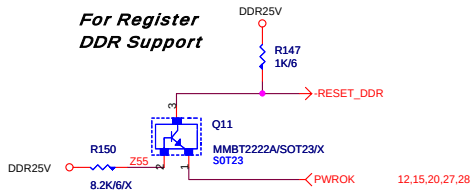


**GIGABYTE**

| | | |
|---|---|---|
| Title | DDR UNBUFFERED 1,2 | |
| Size Custom | Document Number 8S661FXMTIU-IU | Rev 1.0 |
| Date: Thursday, June 16, 2005 | Sheet 16 of 33 | |

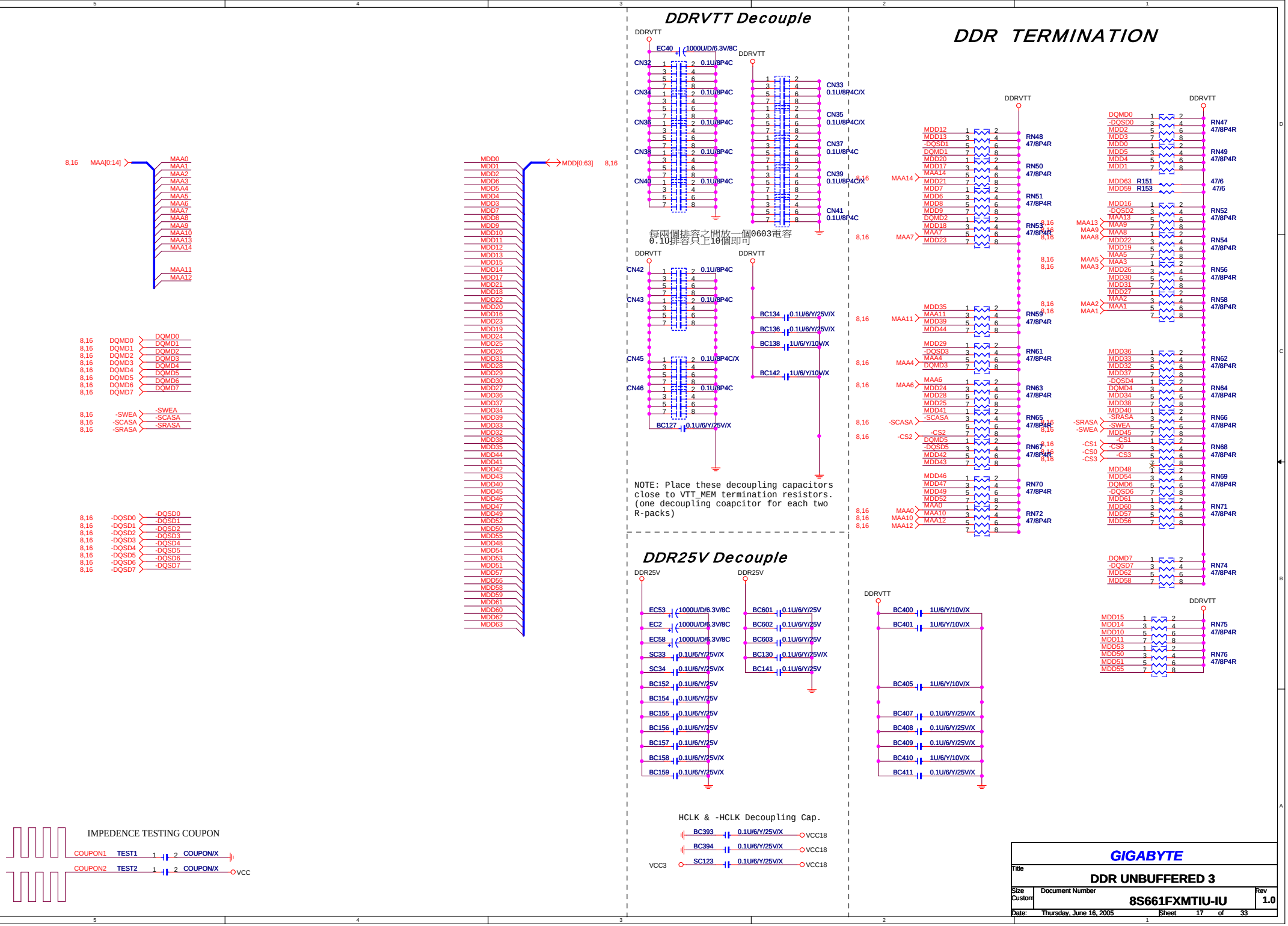
DDRVTT Decouple
DDRVTT
EC40 1000U/D/6.3V/8C
CN32 0.1U/8P4C
CN34 0.1U/8P4C
CN36 0.1U/8P4C
CN38 0.1U/8P4C
CN40 0.1U/8P4C
CN33 0.1U/8P4C/X
CN35 0.1U/8P4C/X
CN37 0.1U/8P4C
CN39 0.1U/8P4C/X
CN41 0.1U/8P4C
每兩個排容之間放一個0603電容
0.1U排容只上10個即可
CN42 0.1U/8P4C
CN43 0.1U/8P4C
CN45 0.1U/8P4C/X
CN46 0.1U/8P4C
BC127 0.1U/6/Y/25V/X
BC134 0.1U/6/Y/25V/X
BC136 0.1U/6/Y/25V/X
BC138 1U/6/Y/10V/X
BC142 1U/6/Y/10V/X
NOTE: Place these decoupling capacitors
close to VTT_MEM termination resistors.
(one decoupling coapcitor for each two
R-packs)
DDR25V Decouple
DDR25V
EC53 1000U/D/6.3V/8C
EC2 1000U/D/6.3V/8C
EC58 1000U/D/6.3V/8C
SC33 0.1U/6/Y/25V/X
SC34 0.1U/6/Y/25V/X
BC152 0.1U/6/Y/25V
BC154 0.1U/6/Y/25V
BC155 0.1U/6/Y/25V
BC156 0.1U/6/Y/25V
BC157 0.1U/6/Y/25V
BC158 0.1U/6/Y/25V/X
BC159 0.1U/6/Y/25V/X
BC601 0.1U/6/Y/25V
BC602 0.1U/6/Y/25V
BC603 0.1U/6/Y/25V
BC130 0.1U/6/Y/25V/X
BC141 0.1U/6/Y/25V
HCLK & -HCLK Decoupling Cap.
BC393 0.1U/6/Y/25V/X VCC18
BC394 0.1U/6/Y/25V/X VCC18
VCC3 SC123 0.1U/6/Y/25V/X VCC18
DDR TERMINATION
DDRVTT
RN48 47/8P4R
RN50 47/8P4R
RN51 47/8P4R
RN53 47/8P4R
RN59 47/8P4R
RN61 47/8P4R
RN63 47/8P4R
RN65 47/8P4R
RN67 47/8P4R
RN70 47/8P4R
RN72 47/8P4R
RN47 47/8P4R
RN49 47/8P4R
R151 47/6
R153 47/6
RN52 47/8P4R
RN54 47/8P4R
RN56 47/8P4R
RN58 47/8P4R
RN62 47/8P4R
RN64 47/8P4R
RN66 47/8P4R
RN68 47/8P4R
RN69 47/8P4R
RN71 47/8P4R
RN74 47/8P4R
RN75 47/8P4R
RN76 47/8P4R
BC400 1U/6/Y/10V/X
BC401 1U/6/Y/10V/X
BC405 1U/6/Y/10V/X
BC407 0.1U/6/Y/25V/X
BC408 0.1U/6/Y/25V/X
BC409 0.1U/6/Y/25V/X
BC410 1U/6/Y/10V/X
BC411 0.1U/6/Y/25V/X
MAA[0:14]
MDD[0:63]
DQMD0 DQMD1 DQMD2 DQMD3 DQMD4 DQMD5 DQMD6 DQMD7
-SWEA -SCASA -SRASA
-DQSD0 -DQSD1 -DQSD2 -DQSD3 -DQSD4 -DQSD5 -DQSD6 -DQSD7
IMPEDENCE TESTING COUPON
COUPON1 TEST1 COUPON/X
COUPON2 TEST2 COUPON/X VCC
GIGABYTE
Title
DDR UNBUFFERED 3
Size Custom
Document Number
8S661FXMTIU-IU
Rev 1.0
Date: Thursday, June 16, 2005
Sheet 17 of 33

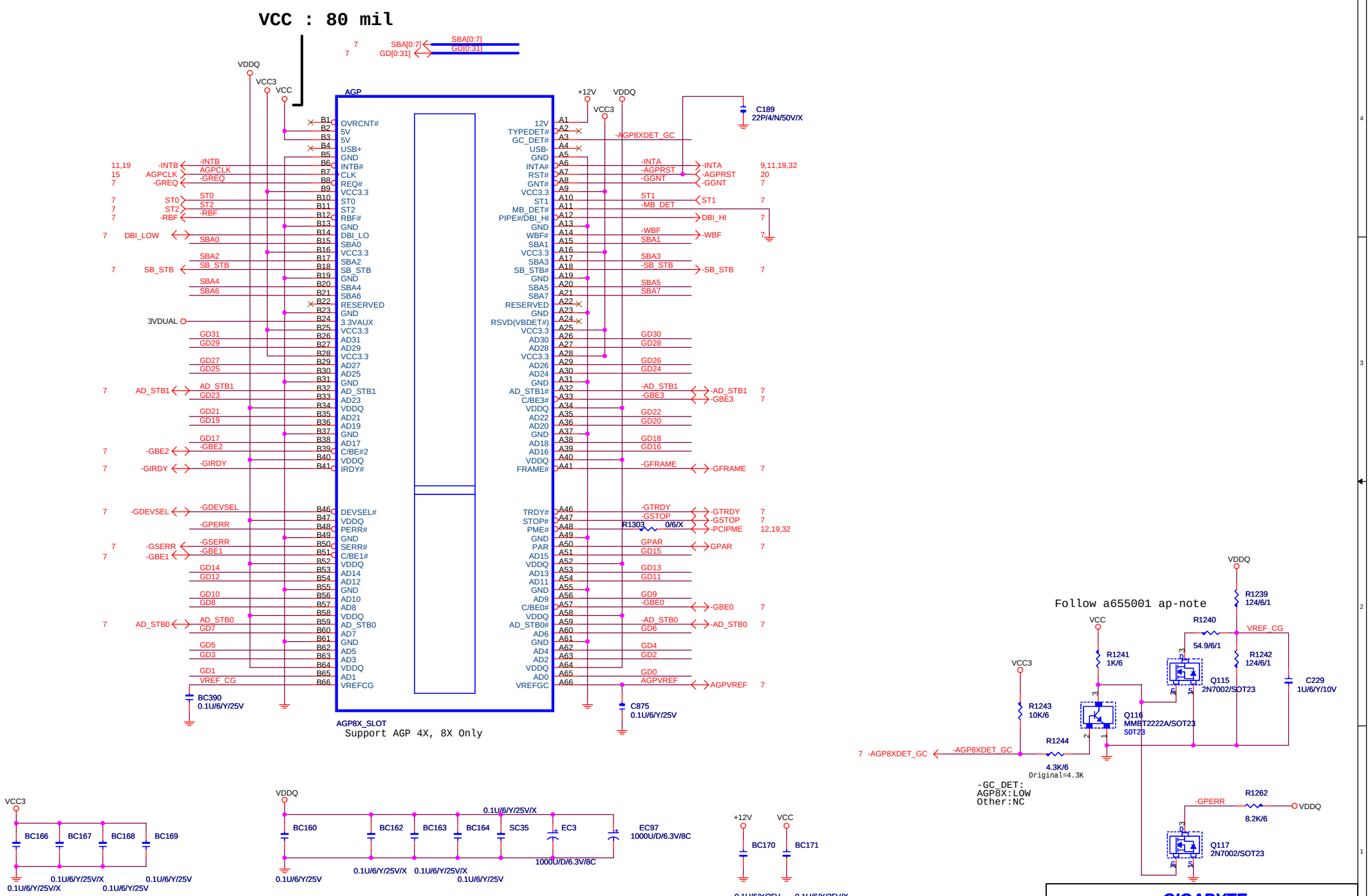
VCC : 80 mil
AGP
AGP8X_SLOT
Support AGP 4X, 8X Only
Follow a655001 ap-note
-GC_DET:
AGP8X:LOW
Other:NC
Place 1 at each pair of 3.3V pins
Decopuling capacitors
(Place near AGP slot)
Place 1 at each pair of VDDQ pins
Place an additional for spread from A14 - A33
GIGABYTE
Title
AGP SLOT
Size
Custom
Document Number
8S661FXMTIU-IU
Rev
1.0
Date:
Thursday, June 16, 2005
Sheet 18 of 33

# PCI SLOT 1,2,3

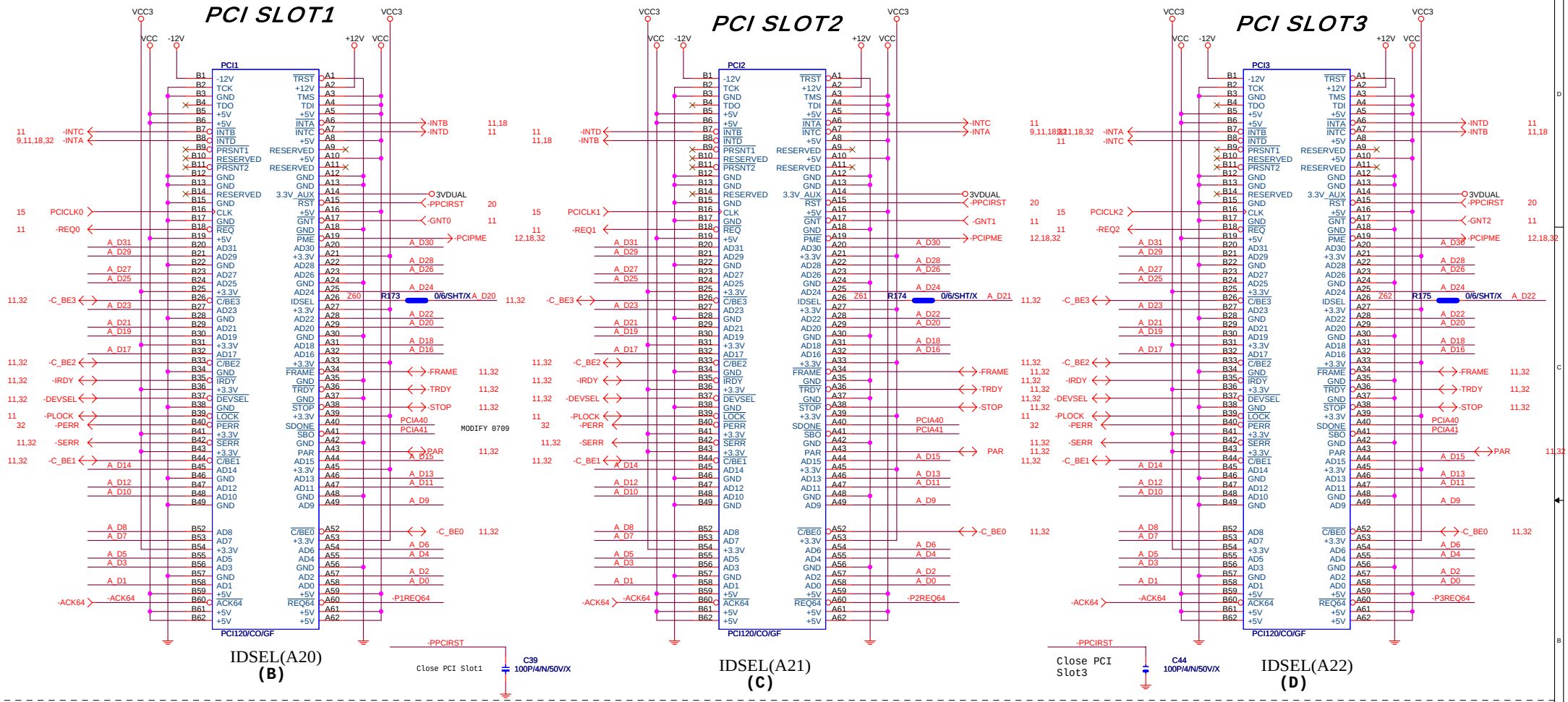


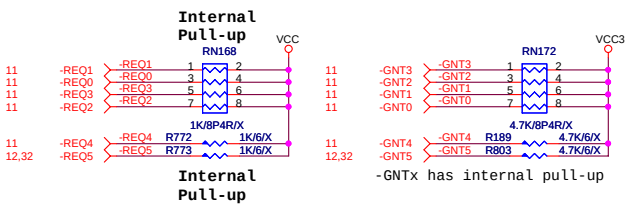


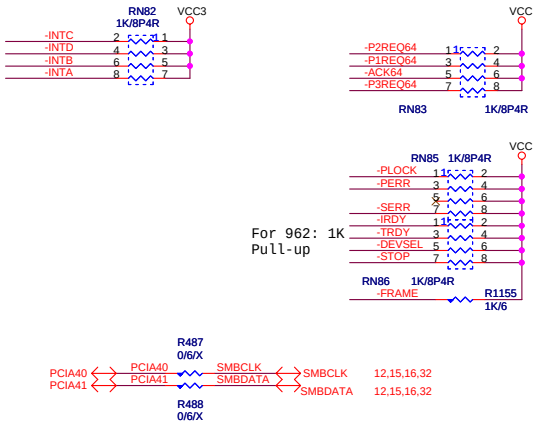


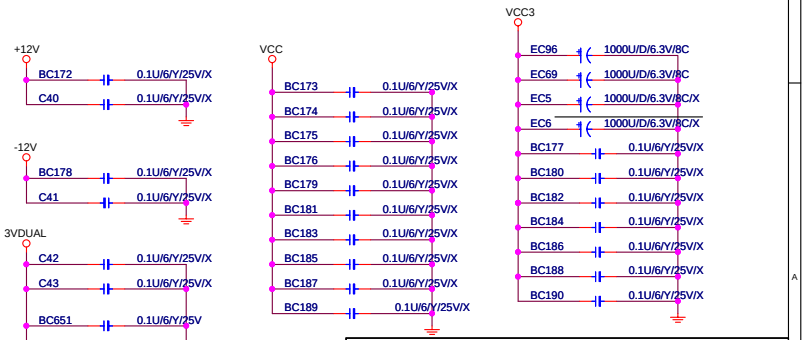


| | INTA# | IDSEL | REQx- |
|---|---|---|---|
| PCI1 | BCDA | AD20 | REQ0 |
| PCI2 | CDAB | AD21 | REQ1 |
| PCI3 | DABC | AD22 | REQ2 |
| RTL8101 | CD | AD26 | REQ5 |

**GIGABYTE**

Title: PCI SLOT 1,2,3

Size: Custom | Document Number: 8S661FXMTIU-IU | Rev: 1.0

Date: Thursday, June 16, 2005 | Sheet 19 of 33

## PRIMARY IDE

963 has internal damping R

963 has internal damping R

These resistor should placed near South Bridge

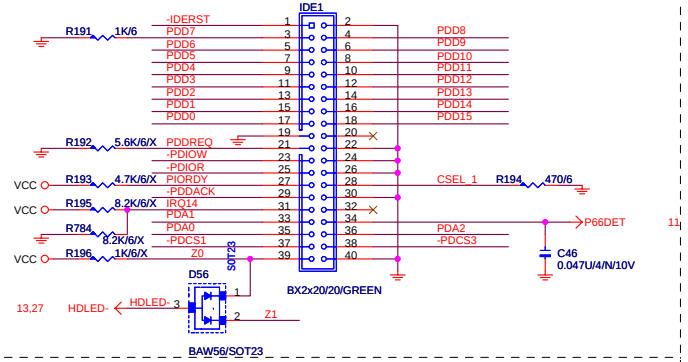


Dual Layout with Q12,Q13,...

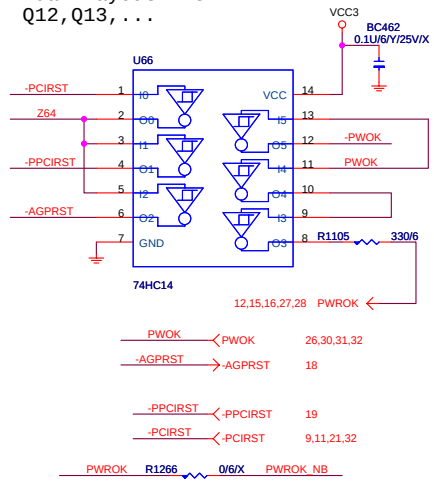


## SECONDARY IDE

963 has internal damping R

963 has internal damping R

These resistor should placed near South Bridge

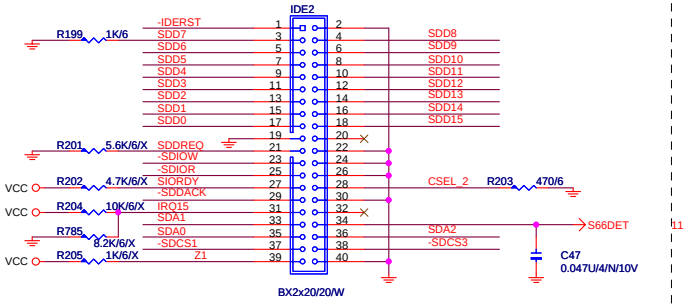


## FRONT SIDE USB1

NEAR FRONT USB CONNECTOR

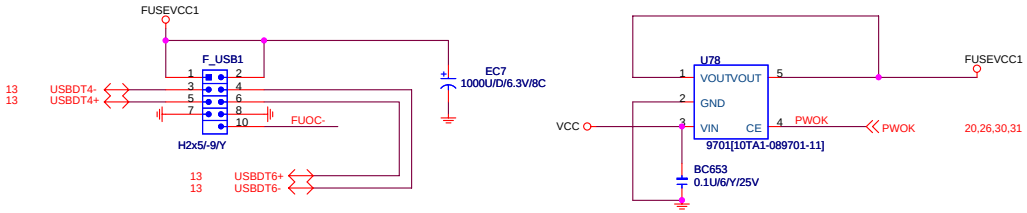


## PCI+IDE RESET

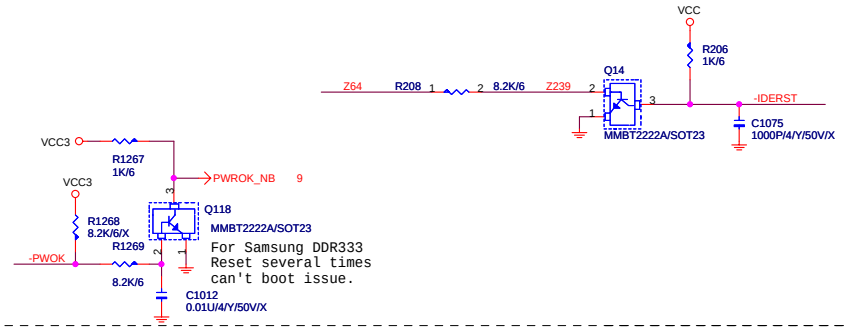


For Samsung DDR333 Reset several times can't boot issue.

## FUSEVCC,GAMEVCC

NEAR FRONT USB CONNECTOR

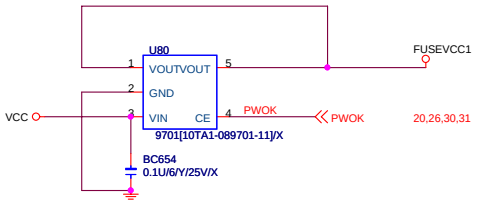


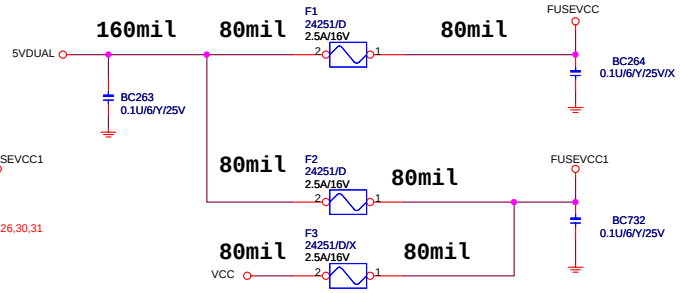


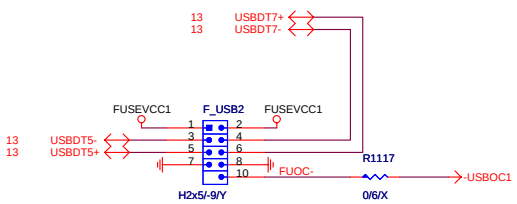


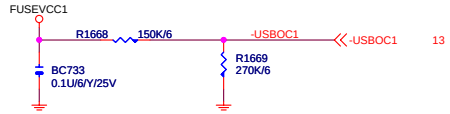


| | | |
|---|---|---|
| GIGABYTE | | |
| Title | IDE, USB | |
| Size Custom | Document Number 8S661FXMTIU-IU | Rev 1.0 |
| Date: Thursday, June 16, 2005 | Sheet 20 of 33 | |

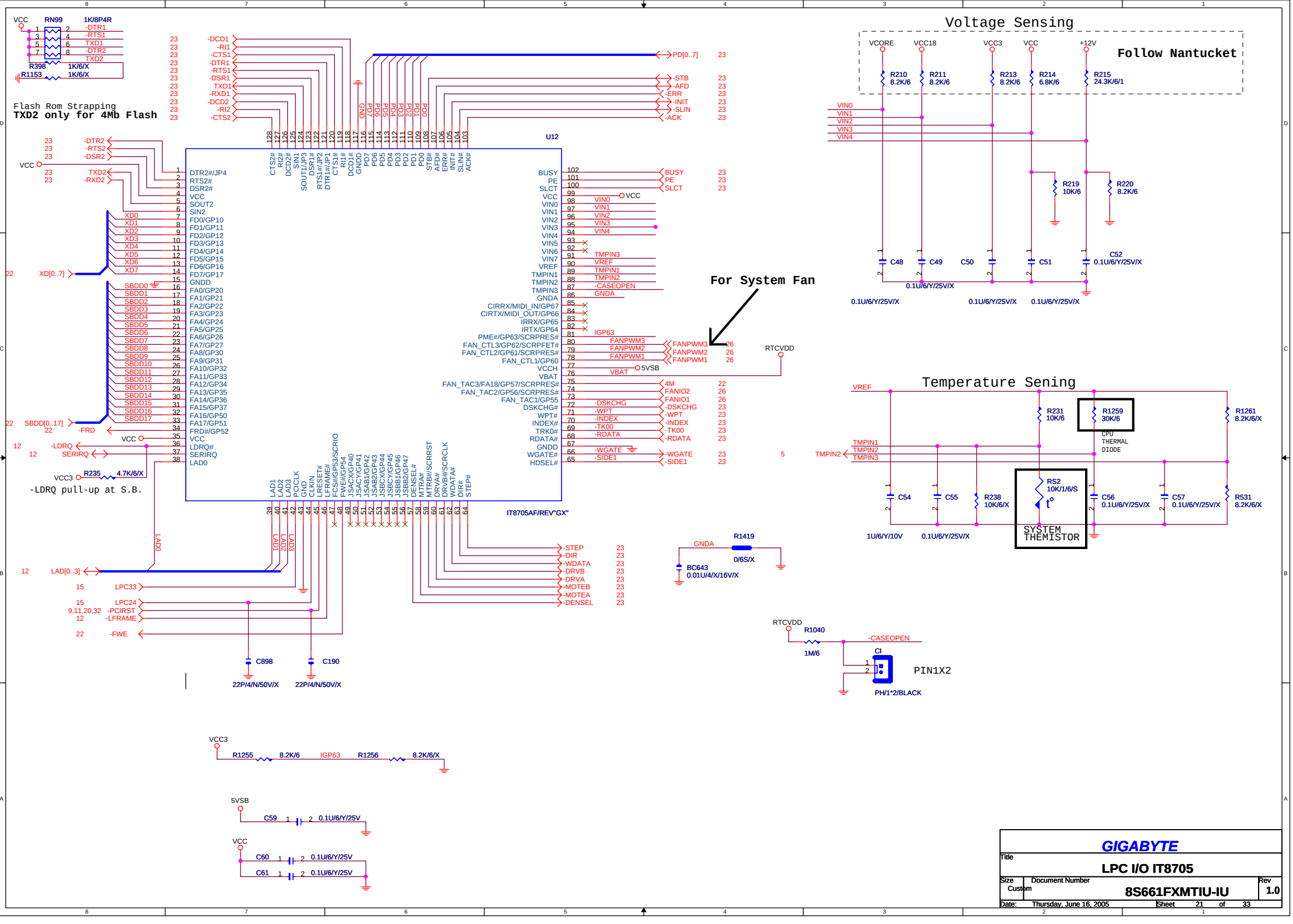
Voltage Sensing
Follow Nantucket
VCORE
VCC18
VCC3
VCC
+12V
R210 8.2K/6
R211 8.2K/6
R213 8.2K/6
R214 6.8K/6
R215 24.3K/6/1
R219 10K/6
R220 8.2K/6
C48
C49
C50
C51
C52 0.1U/6/Y/25V/X
0.1U/6/Y/25V/X
Temperature Sening
VREF
R231 10K/6
R1259 30K/6
CPU THERMAL DIODE
R1261 8.2K/6/X
TMPIN1
TMPIN2
TMPIN3
C54
C55
R238 10K/6/X
RS2 10K/1/6/S
SYSTEM THEMISTOR
C56 0.1U/6/Y/25V/X
C57 0.1U/6/Y/25V/X
R531 8.2K/6/X
1U/6/Y/10V
0.1U/6/Y/25V/X
RN99 1K/8P4R
-DTR1
-RTS1
TXD1
-DTR2
TXD2
R398 1K/6/X
R1153 1K/6/X
Flash Rom Strapping
TXD2 only for 4Mb Flash
U12
IT8705AF/REV"GX"
For System Fan
FANPWM3
FANPWM2
FANPWM1
RTCVDD
R1419 0/6S/X
BC643 0.01U/4/X/16V/X
GNDA
R235 4.7K/6/X
VCC3
-LDRQ pull-up at S.B.
C898 22P/4/N/50V/X
C190 22P/4/N/50V/X
R1040 1M/6
-CASEOPEN
CI
PIN1X2
PH/1*2/BLACK
R1255 8.2K/6
IGP63
R1256 8.2K/6/X
5VSB
C59 0.1U/6/Y/25V
C60 0.1U/6/Y/25V
C61 0.1U/6/Y/25V
GIGABYTE
Title
LPC I/O IT8705
Size Custom
Document Number
8S661FXMTIU-IU
Rev 1.0
Date: Thursday, June 16, 2005
Sheet 21 of 33

Disti: BIOS_WP
CH1: BIOS_WP

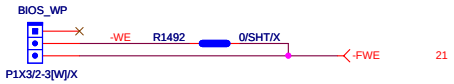

BIOS_WP: BIOS WRITE PROTECT

| PIN | BIOS_WP |
|---|---|
| 1-2 | WRITE PROTECT |
| 2-3 | WRITE ENABLE (default) |

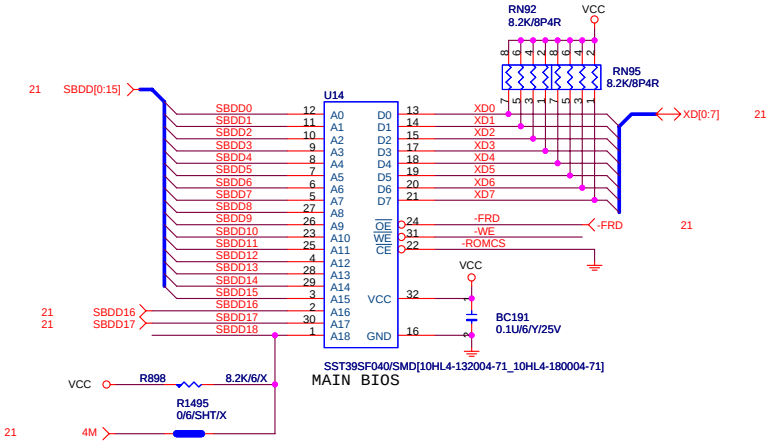

| | | |
|---|---|---|
| GIGABYTE | | |
| Title: Flash ROM | | |
| Size: Custom | Document Number: 8S661FXMTIU-IU | Rev: 1.0 |
| Date: Thursday, June 16, 2005 | Sheet 22 of 33 | |

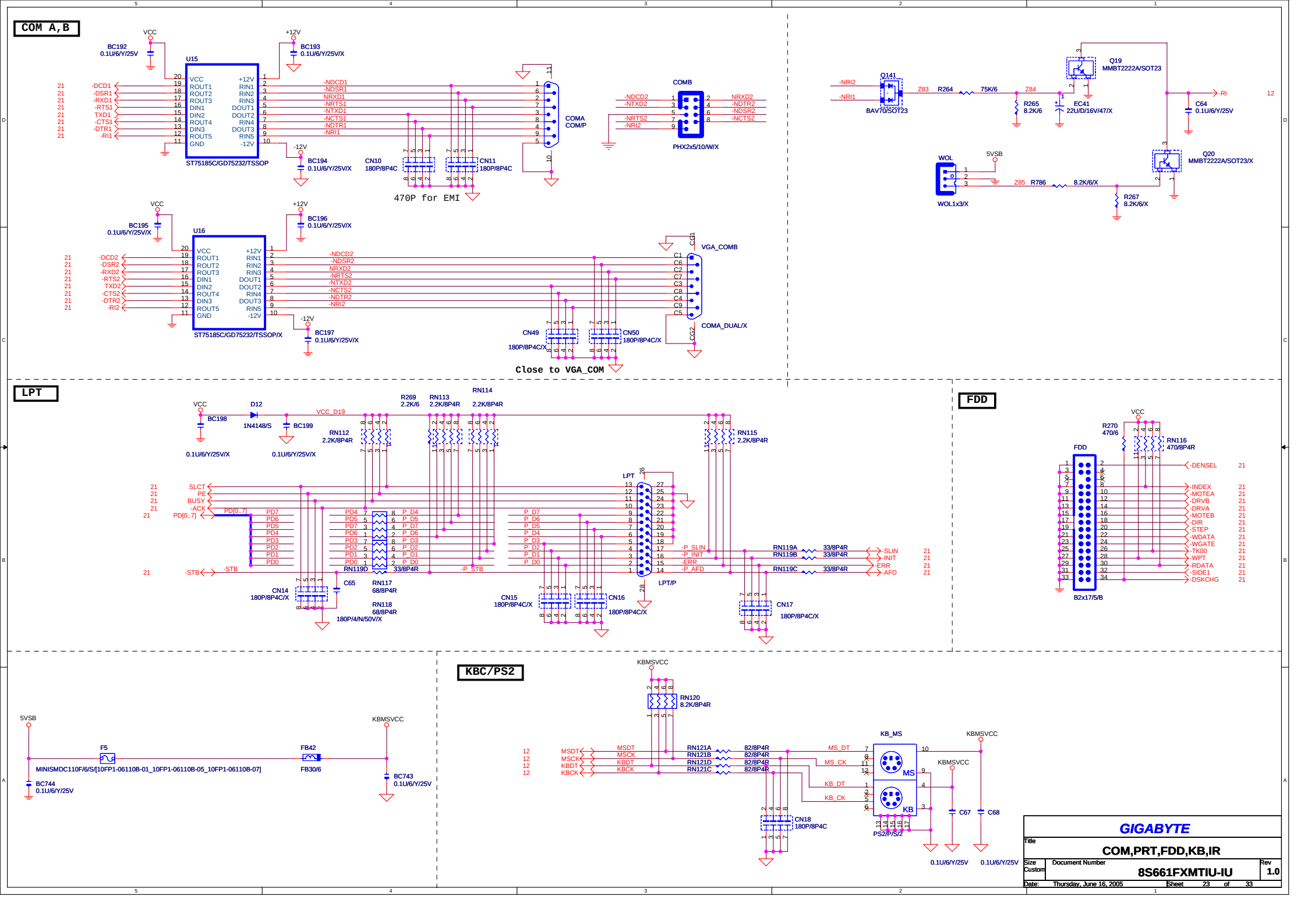
COM A,B
U15
ST75185C/GD75232/TSSOP
BC192 0.1U/6/Y/25V
BC193 0.1U/6/Y/25V/X
BC194 0.1U/6/Y/25V/X
CN10 180P/8P4C
CN11 180P/8P4C
470P for EMI
COMA COM/P
COMB
PHX2x5/10/W/X
U16
ST75185C/GD75232/TSSOP/X
BC195 0.1U/6/Y/25V/X
BC196 0.1U/6/Y/25V/X
BC197 0.1U/6/Y/25V/X
VGA_COMB
COMA_DUAL/X
CN49 180P/8P4C/X
CN50 180P/8P4C/X
Close to VGA_COM
Q141 BAV70/SOT23
Q19 MMBT2222A/SOT23
Q20 MMBT2222A/SOT23/X
R264 75K/6
R265 8.2K/6
EC41 22U/D/16V/47/X
C64 0.1U/6/Y/25V
WOL
WOL1x3/X
R786 8.2K/6/X
R267 8.2K/6/X
LPT
BC198 0.1U/6/Y/25V/X
D12 1N4148/S
BC199 0.1U/6/Y/25V/X
RN112 2.2K/8P4R
R269 2.2K/6
RN113 2.2K/8P4R
RN114 2.2K/8P4R
RN115 2.2K/8P4R
RN117 68/8P4R
RN118 68/8P4R
RN119D 33/8P4R
RN119A 33/8P4R
RN119B 33/8P4R
RN119C 33/8P4R
C65
CN14 180P/4/N/50V/X
CN15 180P/8P4C/X
CN16 180P/8P4C/X
CN17 180P/8P4C/X
LPT/P
FDD
R270 470/6
RN116 470/8P4R
B2x17/5/B
5VSB
F5 MINISMDC110F/6/S/[10FP1-06110B-01_10FP1-06110B-05_10FP1-06110B-07]
FB42 FB30/6
BC744 0.1U/6/Y/25V
BC743 0.1U/6/Y/25V
KBC/PS2
KBMSVCC
RN120 8.2K/8P4R
RN121A 82/8P4R
RN121B 82/8P4R
RN121D 82/8P4R
RN121C 82/8P4R
CN18 180P/8P4C
KB_MS
PS2/P/S/2
C67
C68
0.1U/6/Y/25V
GIGABYTE
Title
COM,PRT,FDD,KB,IR
Size Custom
Document Number
8S661FXMTIU-IU
Rev 1.0
Date: Thursday, June 16, 2005
Sheet 23 of 33

# Filter Cap design:

| | Pin-29 | Pin-30 | Pin-31 | Pin-32 |
|---|---|---|---|---|
| ALC655 Rev D | 1000pf | 1000pf | 1uf | Front-MIC2 |
| ALC655 Rev C | 1000pf | 1000pf | 1uf | X |
| ALC658 | X | X | JD4 | X |
| ALC650 | 1000pf | 1000pf | 1uf | 1uf |
| ALC850 | 1000pf | 1000pf | JD4 | Front-MIC2 |

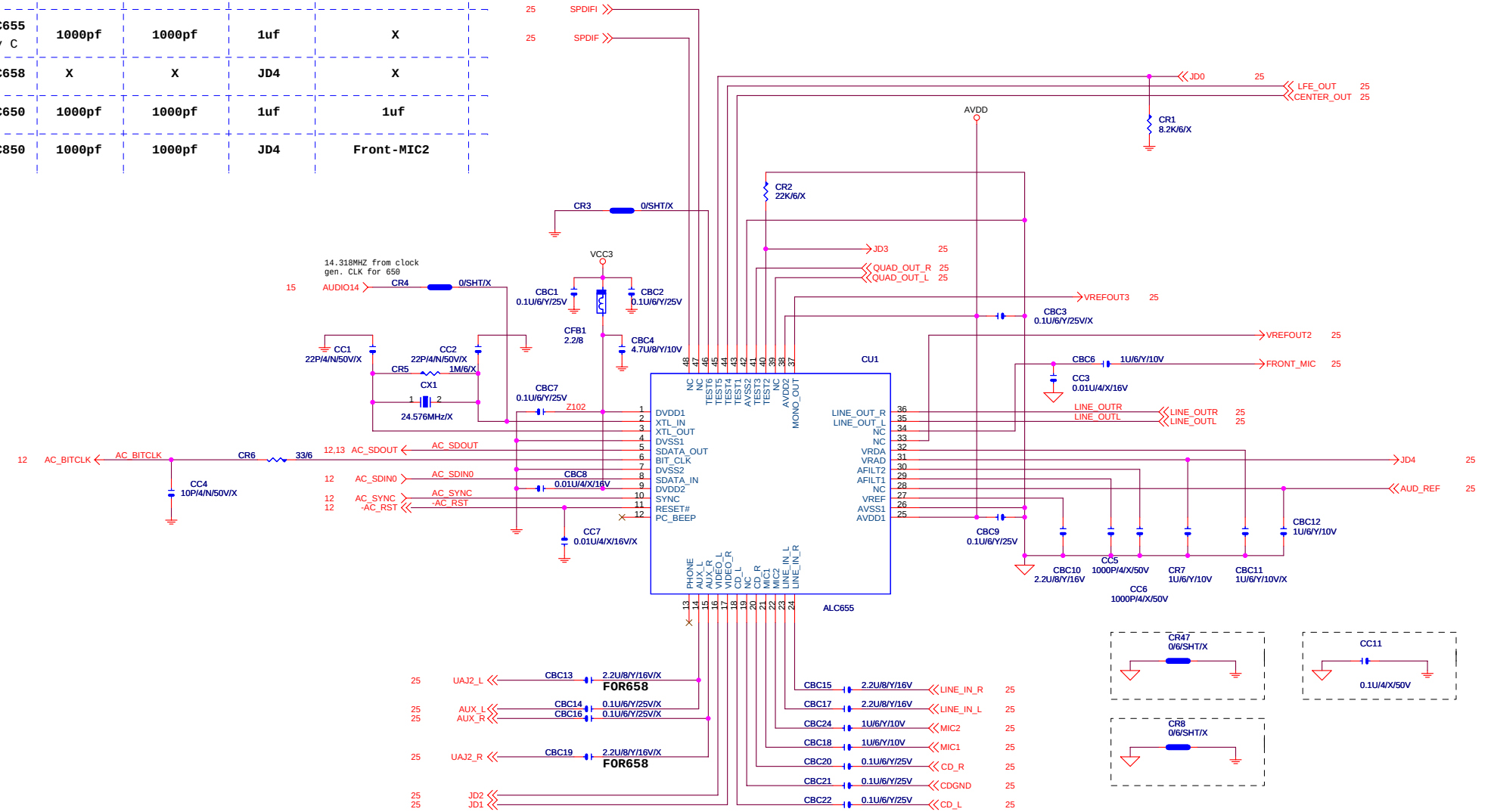


# Arrangement of Jack detection Pin:

| | Pin-45(JD0) | Pin-17(JD1) | Pin-16(JD2) | Pin-40(JD3) | Pin-31(JD4) | Pin-13(JD5) |
|---|---|---|---|---|---|---|
| ALC655 | for MIC-IN | for FRONT-OUT | for LINE-IN | | | |
| ALC658 | for MIC-IN | for UAJ1 | for UAJ2 | for FRONT-OUT<br>Exernal pull high is needed | for LINE-IN<br>Exernal pull high is needed | |
| ALC850 | for MIC-IN | for Front Pannel OUT | for Front Pannel IN | for FRONT-OUT | for LINE-IN | for SurrBack Out |

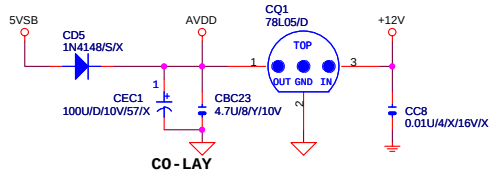


| | |
|---|---|
| GIGABYTE | |
| Title | ALC655/658/850 |
| Size: Custom | Document Number: 8S661FXMTIU-IU |
| Rev | 1.0 |
| Date: Thursday, June 16, 2005 | Sheet 24 of 33 |

## LINE OUT

JDO,JD2,GPIO0 爲偵測DEVICE INPUT 時由LOW
TO HIGH Edge trigger(pop manual)

LINE OUT SENSING
R>4K OHM=>POWER SPEAKER
4K OHM>R>400 OHM=>MICROPHONE
R<400 OHM=>HEADPHONE

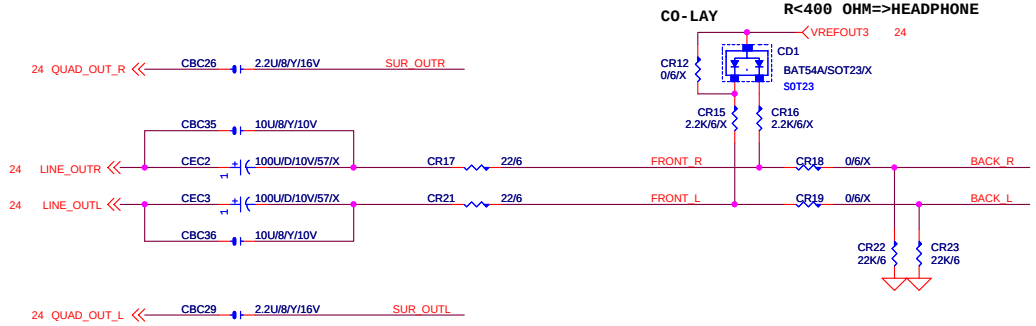


1/2(3.14)RC=1/2(3.14)8.2K*4.7U=4.3HZ以上AC 信號全部衰減 TO
0V 不會造成JDO 誤動作(無device 時play wav )

## LINE-IN

LINE IN SENSING(當OUTPUT)
R>4K OHM=>POWER SPEAKER
4K OHM>R>400 OHM=>MICROPHONE
R<400 OHM=>HEADPHONE

LINE IN SENSING(當INPUT)
swing of input signal>-40dbv(10mv)===>line in device active
swing of input signal<-40dbv(10mv)===>unknown line in device

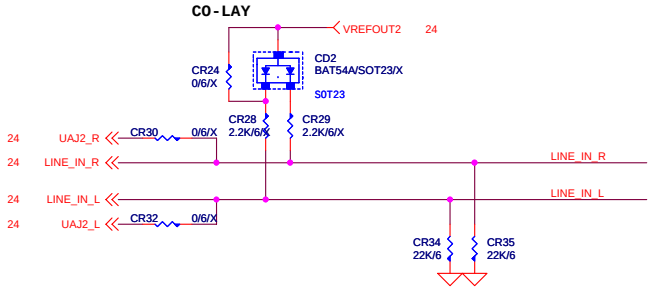


## MIC

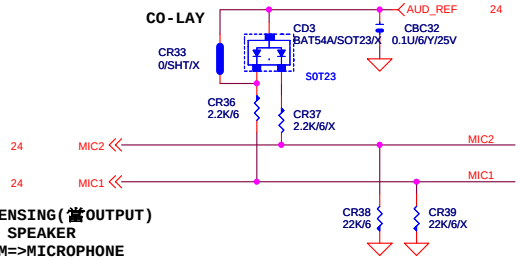


MICROPHONE IN SENSING(當OUTPUT)
R>4K OHM=>POWER SPEAKER
4K OHM>R>400 OHM=>MICROPHONE
R<400 OHM=>HEADPHONE

MICROPHONE IN SENSING(當INPUT)(利用vref 偏壓 與CR43,CR32 並聯求出阻抗)
7.1k ohm>R>2.3k ohm===>microphone in
R<2.3k ohm or R>7.1k ohm===>unknown device

## CD IN

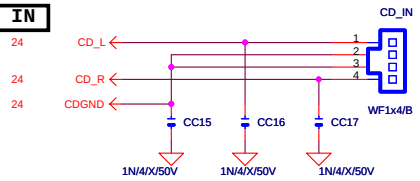


## AUX IN

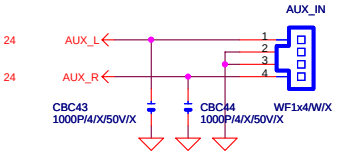


## INTEL FRONT AUDIO

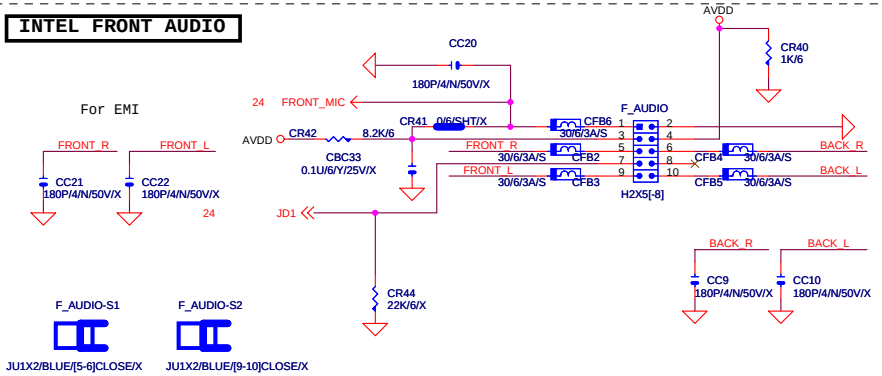


## AC97 JACK

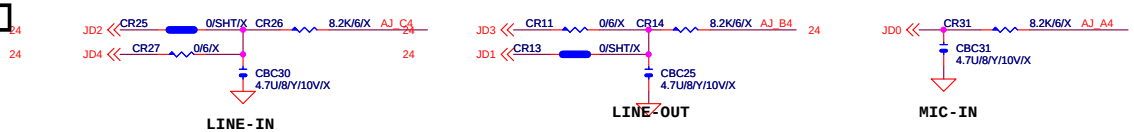


LINE-IN LINE-OUT MIC-IN

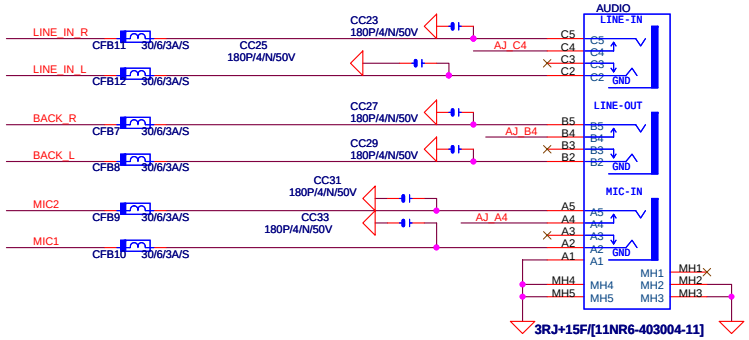


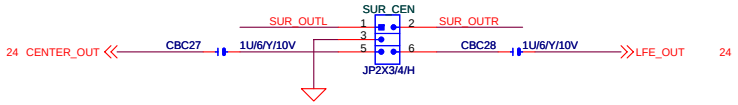


## SPDIF/SPDIF_IN

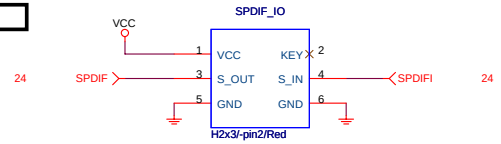


| | | |
|---|---|---|
| GIGABYTE | | |
| Title | AUDIO OUTPUT,GAME PORT | |
| Size Custom | Document Number 8S661FXMTIU-IU | Rev 1.0 |
| Date: Thursday, June 16, 2005 | Sheet 25 of 33 | |

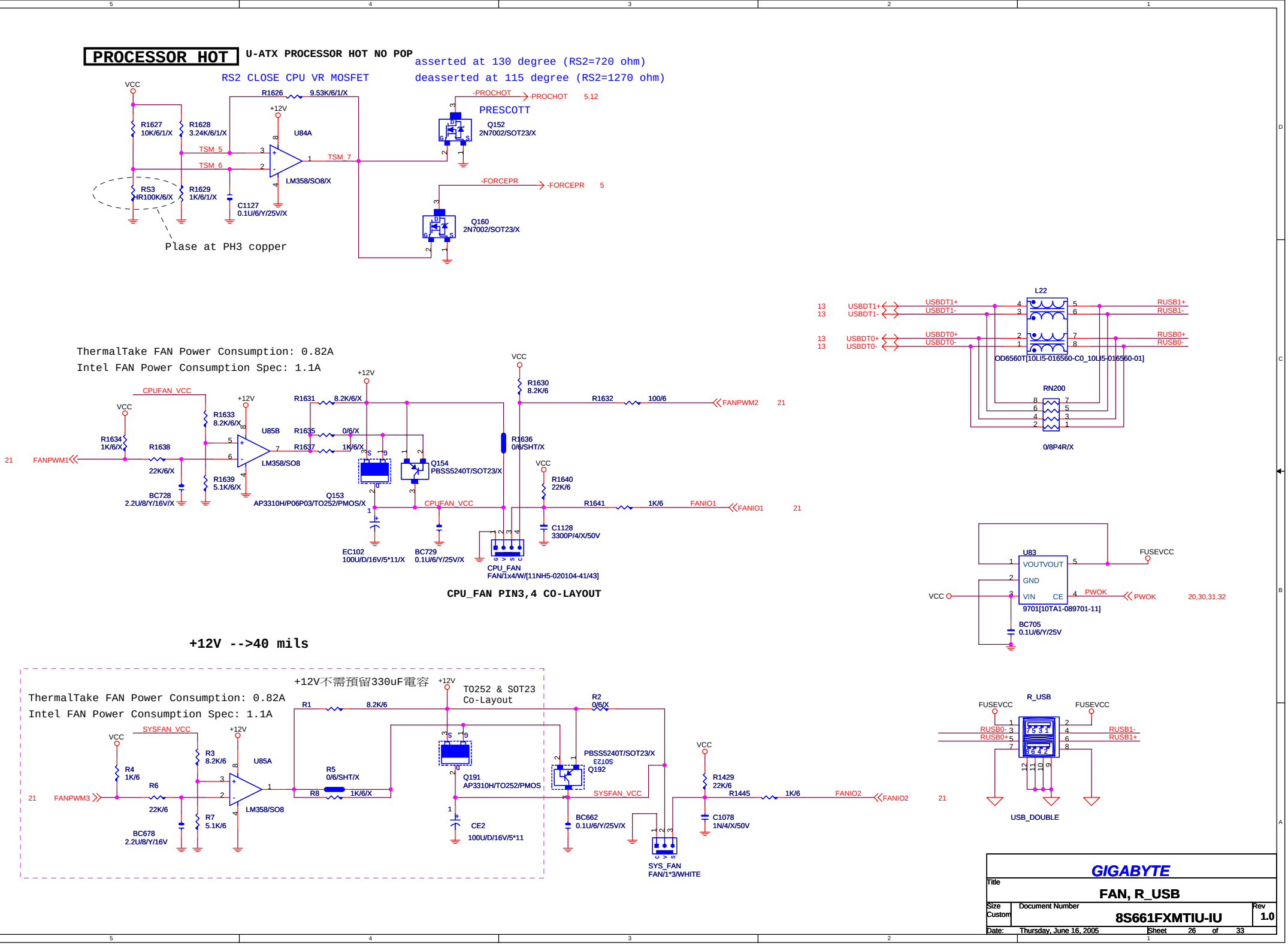
PROCESSOR HOT
U-ATX PROCESSOR HOT NO POP
asserted at 130 degree (RS2=720 ohm)
deasserted at 115 degree (RS2=1270 ohm)
RS2 CLOSE CPU VR MOSFET
VCC
R1626 9.53K/6/1/X
+12V
R1627 10K/6/1/X
R1628 3.24K/6/1/X
U84A
TSM_5
TSM_6
TSM_7
LM358/SO8/X
RS3 HR100K/6/X
R1629 1K/6/1/X
C1127 0.1U/6/Y/25V/X
Plase at PH3 copper
-PROCHOT
-PROCHOT 5,12
PRESCOTT
Q152 2N7002/SOT23/X
-FORCEPR
-FORCEPR 5
Q160 2N7002/SOT23/X
ThermalTake FAN Power Consumption: 0.82A
Intel FAN Power Consumption Spec: 1.1A
CPUFAN_VCC
R1633 8.2K/6/X
R1634 1K/6/X
R1638 22K/6/X
21 FANPWM1
U85B
LM358/SO8
R1639 5.1K/6/X
BC728 2.2U/8/Y/16V/X
R1631 8.2K/6/X
R1635 0/6/X
R1637 1K/6/X
Q153 AP3310H/P06P03/TO252/PMOS/X
Q154 PBSS5240T/SOT23/X
EC102 100U/D/16V/5*11/X
BC729 0.1U/6/Y/25V/X
R1630 8.2K/6
R1632 100/6
FANPWM2 21
R1636 0/6/SHT/X
R1640 22K/6
R1641 1K/6
FANIO1
FANIO1 21
C1128 3300P/4/X/50V
CPU_FAN FAN/1x4/W/[11NH5-020104-41/43]
CPU_FAN PIN3,4 CO-LAYOUT
L22
13 USBDT1+
13 USBDT1-
USBDT1+
USBDT1-
RUSB1+
RUSB1-
13 USBDT0+
13 USBDT0-
USBDT0+
USBDT0-
RUSB0+
RUSB0-
OD6560T[10LI5-016560-C0_10LI5-016560-01]
RN200
0/8P4R/X
U83
VOUTVOUT
GND
VIN
CE
FUSEVCC
PWOK
PWOK 20,30,31,32
9701[10TA1-089701-11]
BC705 0.1U/6/Y/25V
+12V -->40 mils
+12V不需預留330uF電容
TO252 & SOT23 Co-Layout
ThermalTake FAN Power Consumption: 0.82A
Intel FAN Power Consumption Spec: 1.1A
SYSFAN_VCC
R3 8.2K/6
R4 1K/6
R6 22K/6
21 FANPWM3
U85A
LM358/SO8
R7 5.1K/6
BC678 2.2U/8/Y/16V
R1 8.2K/6
R5 0/6/SHT/X
R8 1K/6/X
Q191 AP3310H/TO252/PMOS
CE2 100U/D/16V/5*11
R2 0/6/X
PBSS5240T/SOT23/X SOT23 Q192
BC662 0.1U/6/Y/25V/X
SYS_FAN FAN/1*3/WHITE
R1429 22K/6
R1445 1K/6
FANIO2
FANIO2 21
C1078 1N/4/X/50V
R_USB
FUSEVCC
RUSB0-
RUSB0+
RUSB1-
RUSB1+
USB_DOUBLE
GIGABYTE
Title
FAN, R_USB
Size Custom
Document Number
8S661FXMTIU-IU
Rev 1.0
Date: Thursday, June 16, 2005
Sheet 26 of 33

## FRONT PANEL

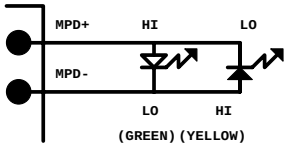


### States for a single-color power LED

| LED States | ACPI States | MPD+ | MPD- |
|---|---|---|---|
| OFF | S1,S3,S5 | HI | HI |
| Steady Green | S0 | HI | LO |
| Blinking Green | S0(message waiting) | HI | BLINKING |

### States for a dual-color power LED

| LED States | ACPI States | MPD+ | MPD- |
|---|---|---|---|
| OFF | S5 | HI | HI |
| Steady Green | S0 | HI | LO |
| Blinking Green | S0(message waiting) | HI | BLINKING |
| Steady Yellow | S1,S3 | LO | HI |
| Blinking Yellow | S1,S3(message waiting) | LO | BLINKING |

| | S0 | S1 | S3 | S5 |
|---|---|---|---|---|
| GPIO11(GLED-) | 0 | 1 | 1 | 0 |
| GPIO7(SUSLED) | 0 | B | B | 0 |
| ACPILED(Pin A15) | 0 | 0 | 0 | 1 |

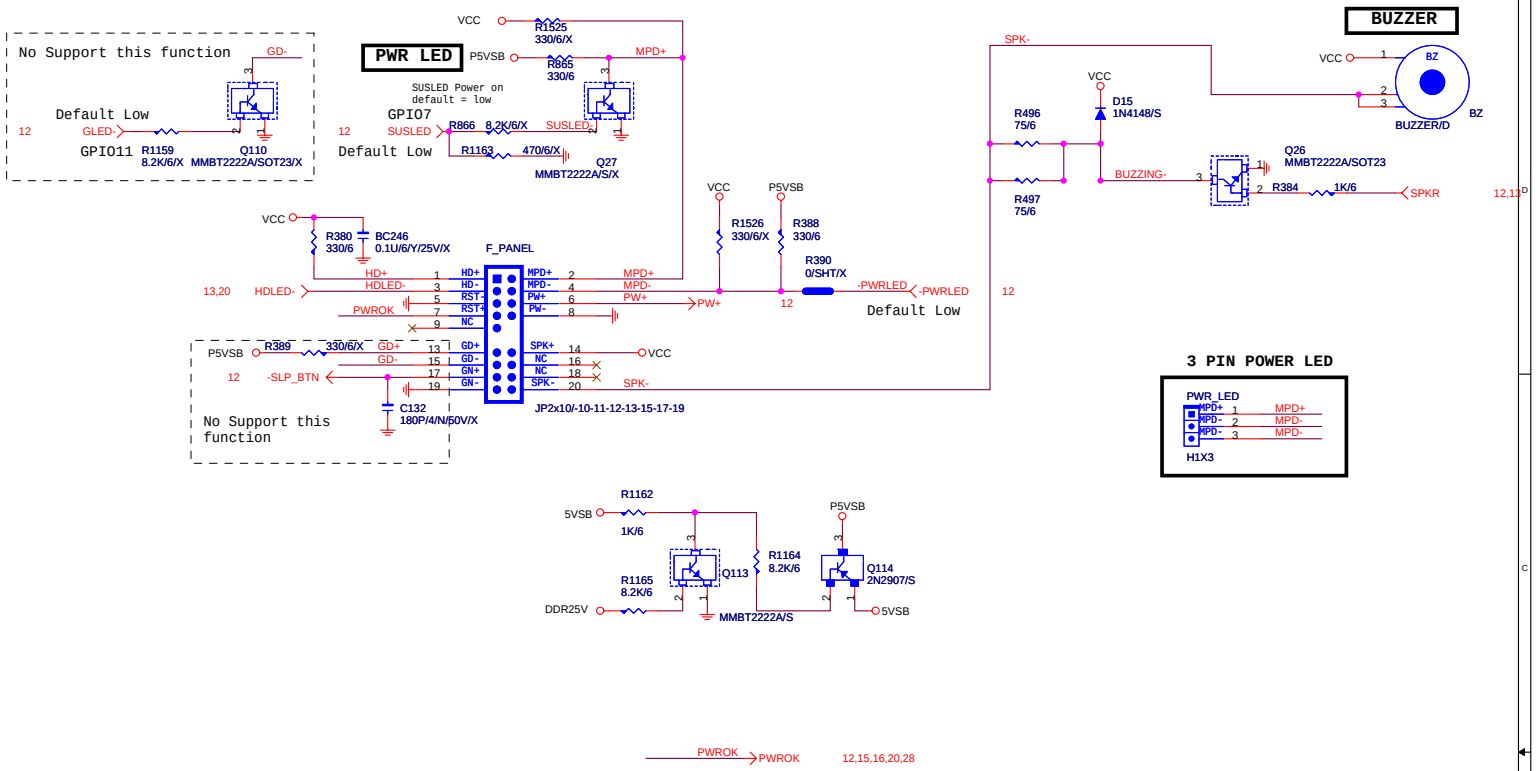


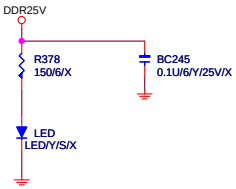


GIGABYTE

Title: PANEL, STR LED

Size: Custom | Document Number: 8S661FXMTIU-IU | Rev: 1.0

Date: Thursday, June 16, 2005 | Sheet 27 of 33

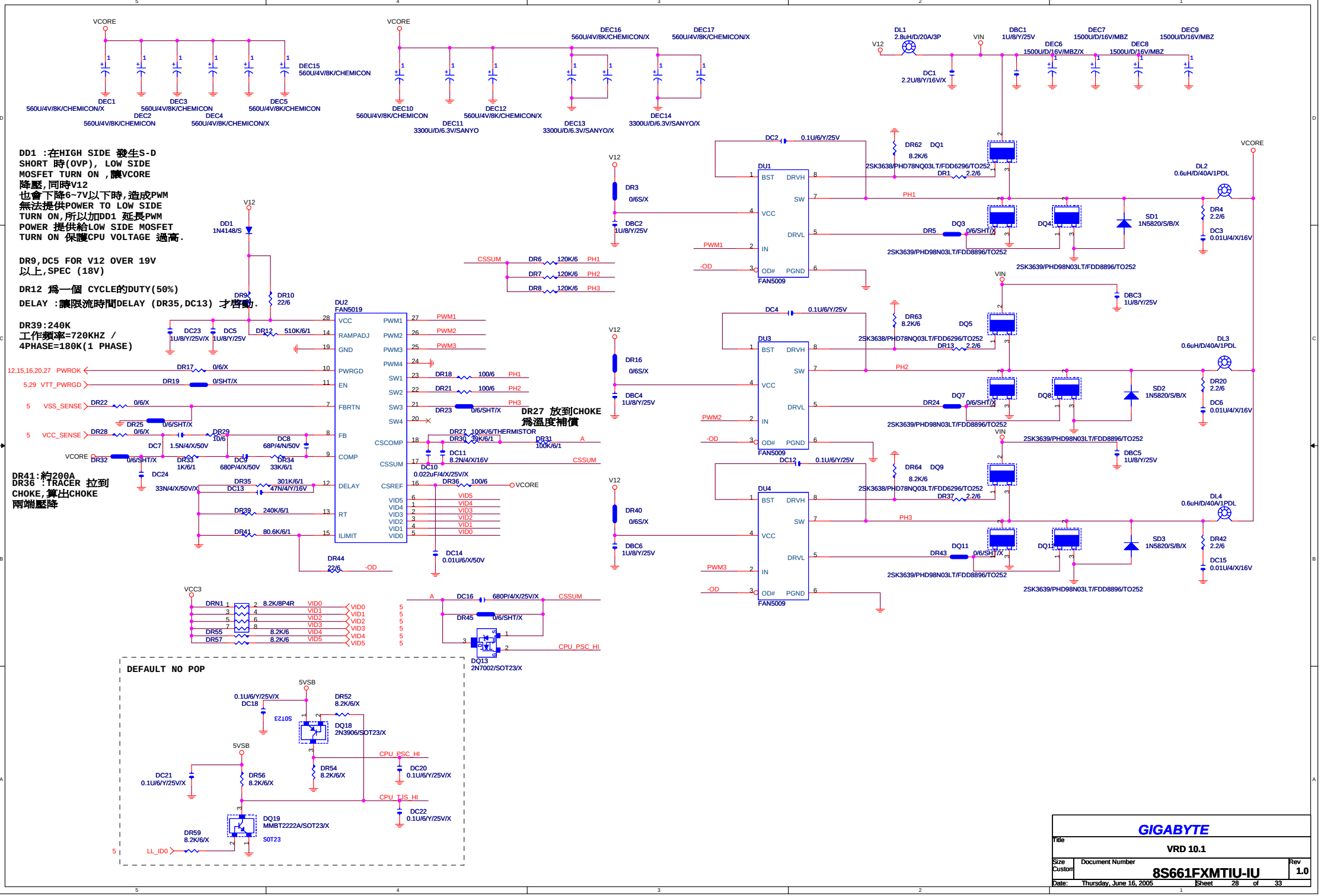
DD1 :在HIGH SIDE 發生S-D SHORT 時(OVP), LOW SIDE MOSFET TURN ON ,讓VCORE降壓,同時V12也會下降6~7V以下時,造成PWM無法提供POWER TO LOW SIDE TURN ON,所以加DD1 延長PWM POWER 提供給LOW SIDE MOSFET TURN ON 保護CPU VOLTAGE 過高.
DR9,DC5 FOR V12 OVER 19V 以上,SPEC (18V)
DR12 爲一個 CYCLE的DUTY(50%)
DELAY :讓限流時間DELAY (DR35,DC13) 才啓動.
DR39:240K
工作頻率=720KHZ / 4PHASE=180K(1 PHASE)
DR41:約200A
DR36 :TRACER 拉到CHOKE,算出CHOKE兩端壓降
DR27 放到CHOKE爲溫度補償
DEFAULT NO POP
GIGABYTE
VRD 10.1
8S661FXMTIU-IU
Rev 1.0
Date: Thursday, June 16, 2005
Sheet 28 of 33

## VDDQ FOR AGP 4X/8X

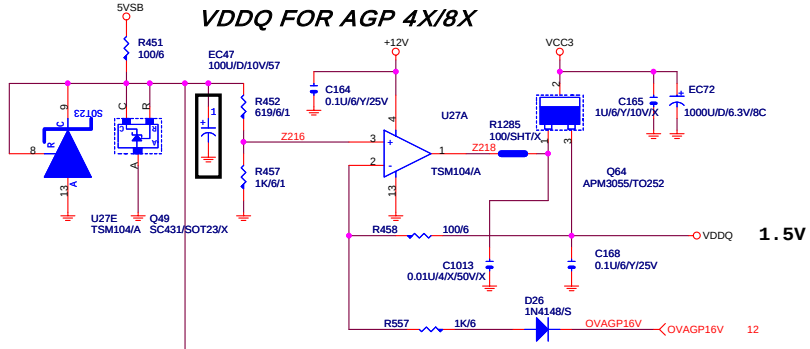


GPO4:Hi --> 1.5V
GPO4:Lo --> 1.6V

## VCC18 FOR NB,SB

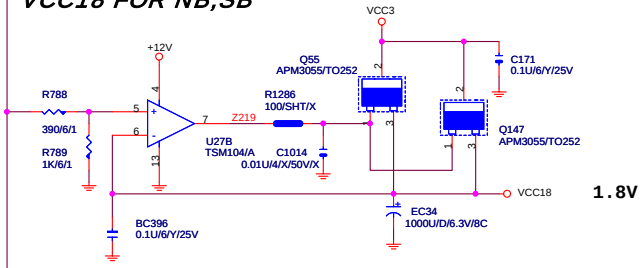


## VTT_GMCHVID FOR 775 CPU

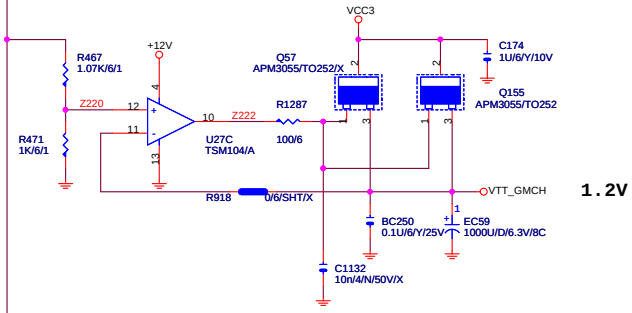


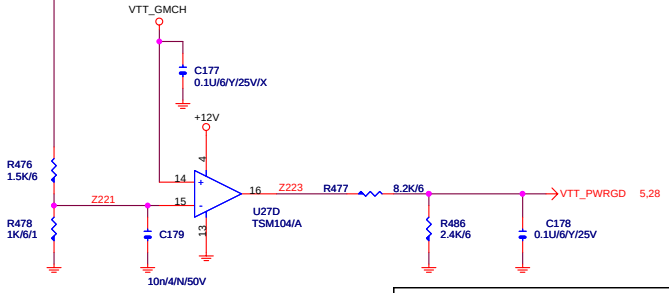


## 18VDUAL FOR SB & NB

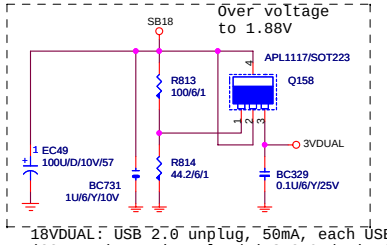


18VDUAL: USB 2.0 unplug, 50mA, each USB 2.0 device add (32~41mA). Maximun load (USB2.0 device*8) is 327mA.

| | | |
|---|---|---|
| GIGABYTE | | |
| Title: VDDQ, VCCVID, 3VDUAL | | |
| Size: Custom | Document Number: 8S661FXMTIU-IU | Rev: 1.0 |
| Date: Thursday, June 16, 2005 | Sheet 29 of 33 | |

# ATX CONN, DC POWER

## ATX POWER CONNECTOR

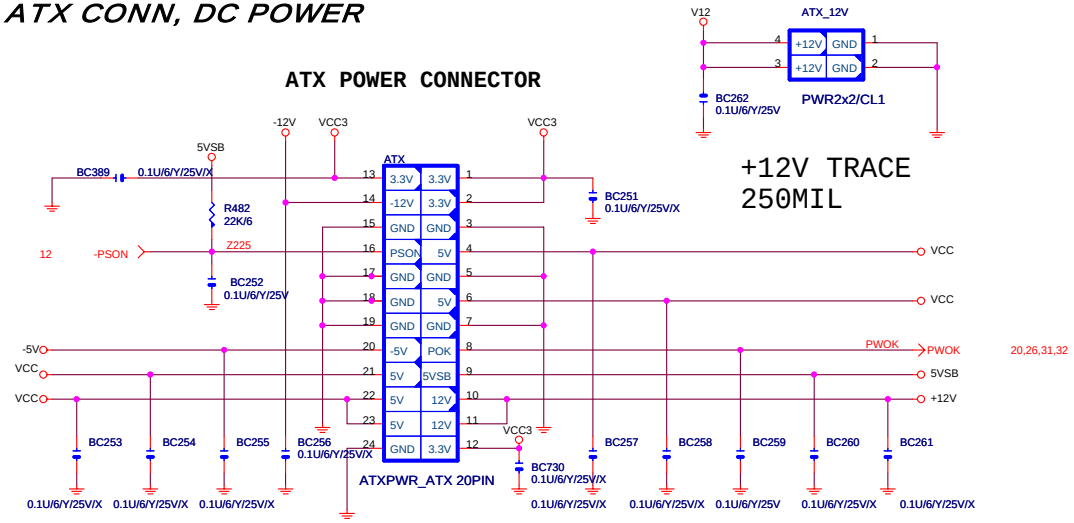


| 8SRXL South Bridge GPIO LIST | | | |
|---|---|---|---|
| ITEM | DESCRIPTION | STATUS | Default |
| GPO0 | Non Use | | Hi |
| GPO1 | Non Use | | Hi |
| GPO4 | Non Use | | Hi |
| GPO2 | Non Use | | Hi |
| GPO3 | Green Button | Hi:Normal, Lo:Into Green mode | Hi |
| GPIO5 | REQ5 | | |
| GPIO6 | GNT5 | | |
| GPO7 | Non Use | | Hi |
| GPO11 | Non Use | | Hi |
| GPI8 | Wake On Ring | Hi:Normal, Lo:Ring Power On | Hi |
| GPI9 | Case Open | Hi:Case Open , Lo:Normal | Lo |
| GPI10 | Clear Caseopen status | Hi:Clear Caseopen Status, Lo:Normal | Lo |
| GPI13 | Non Use | | Hi |
| GPO12 | Non Use | | Hi |
| GPI14 | Primary Down | Lo:CODEC Only | Lo |
| GPIO15 | KB Data | | Hi |
| GPIO16 | KB Clk | | Hi |
| GPIO17 | MS Data | | Hi |
| GPIO18 | MS Clk | | Hi |

### States for a single-color power LED

| LED States | ACPI States | MPD+ | MPD- | BIOS GPIO7 | BIOS ACPILED |
|---|---|---|---|---|---|
| OFF | S5 | HI | HI | LO | HI/NC |
| Steady Green | S0 | HI | LO | LO | LO |
| Blinking Green | S0(message waiting) | HI | BLINKING | LO | BLINKING |

### States for a dual-color power LED

| LED States | ACPI States | MPD+ | MPD- | BIOS GPIO7 | BIOS ACPILED |
|---|---|---|---|---|---|
| OFF | S5 | HI | HI | LO | HI/NC |
| Steady Green | S0 | HI | LO | LO | LO |
| Blinking Green | S0(message waiting) | HI | BLINKING | LO | BLINKING |
| Steady Yellow | S1,S3 | LO | HI | HI | HI |
| Blinking Yellow | S1,S3(message waiting) | LO | BLINKING | HI | BLINKING |

### States for green LED

| LED States | ACPI States | GLED- | BIOS GPIO11 |
|---|---|---|---|
| ON | S1,S3 | HI | HI |
| OFF | S0,S5 | LO | LO |

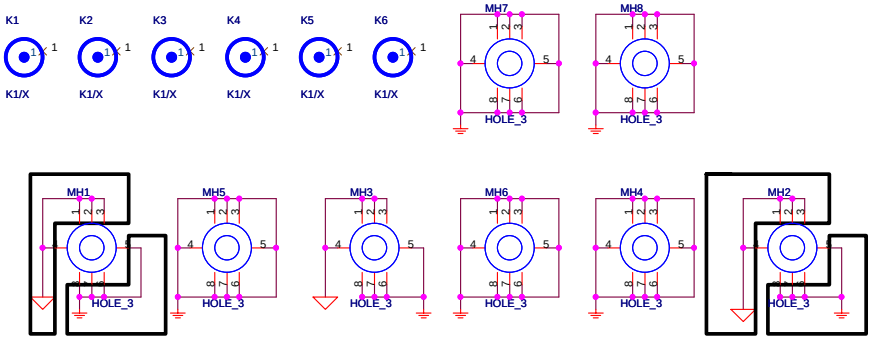


EMI (VCC.GND CUT HOLE PLANE)

EMI (VCC.LGND CUT HOLE PLANE)

### BIOS REQUEST

| | | INTEL LED DEFINED | | | | GIGABYTE LED DEFINED | | | | | |
|---|---|---|---|---|---|---|---|---|---|---|---|
| SINGLE | DUAL | | GPIO7 | ACPILED | GPIO11 | | GPIO7 | ACPILED | GPIO11 | SINGLE | DUAL |
| GREEN | GREEN | S0 | LO | LO | LO | S0 | LO | LO | LO | GREEN | GREEN |
| OFF | YELLOW | S1 | HI | HI | HI | S1 | LO | BLINKING | HI | G(BLINK) | G(BLINK) |
| OFF | YELLOW | S3 | HI | HI | HI | S3 | HI | HI | HI | OFF | YELLOW |
| OFF | OFF | S4/S5 | LO | HI/NC | LO | S4/S5 | LO | HI/NC | LO | OFF | OFF |

GIGABYTE

Title: ATX, GPIO LIST

Size: Custom | Document Number: 8S661FXMTIU-IU | Rev: 1.0

Date: Thursday, June 16, 2005 | Sheet 30 of 33

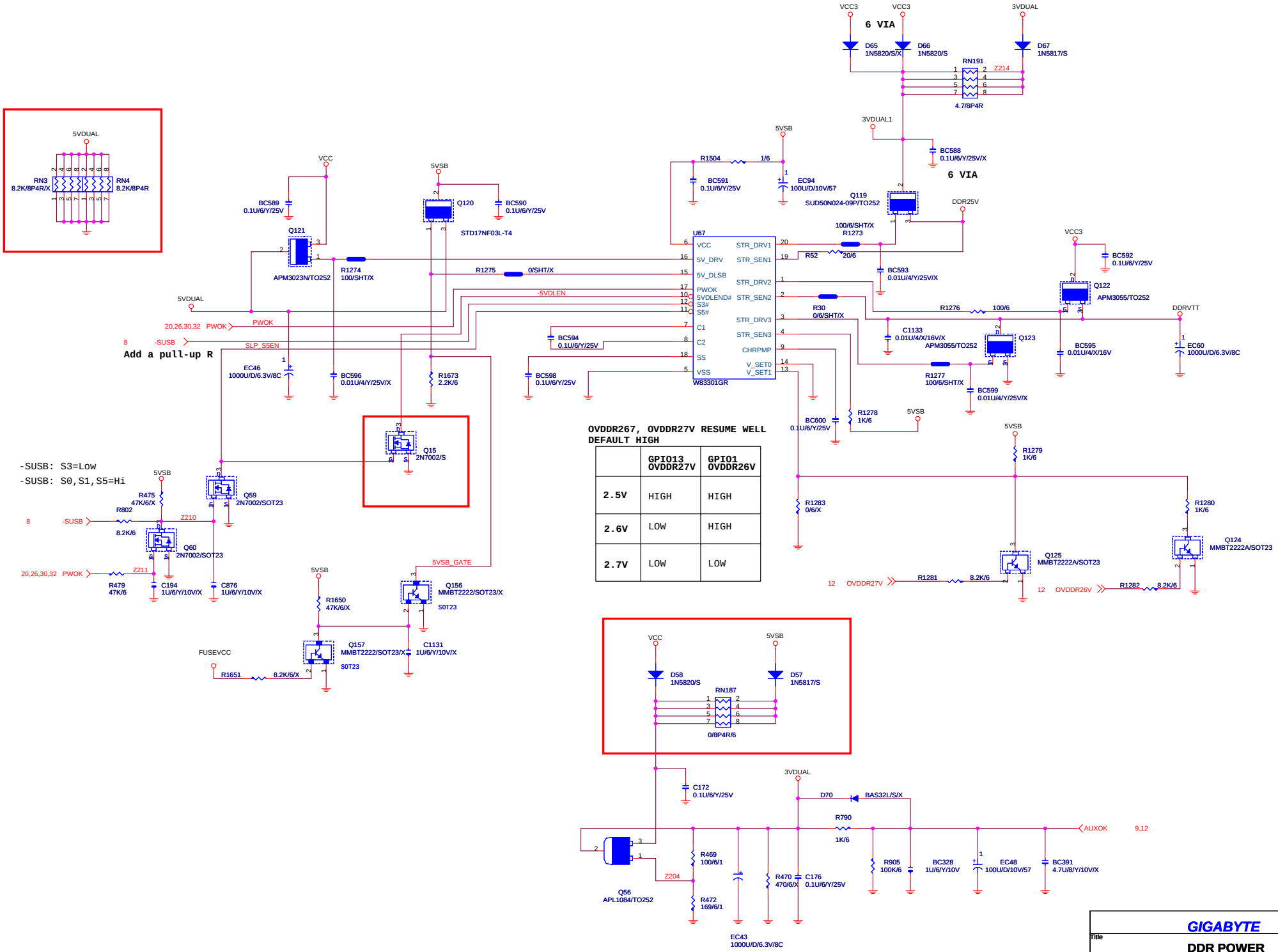


| | |
|---|---|
| GIGABYTE | |
| Title | DDR POWER |
| Size Custom | Document Number 8S661FXMTIU-IU |
| Rev | 1.0 |
| Date: Thursday, June 16, 2005 | Sheet 31 of 33 |

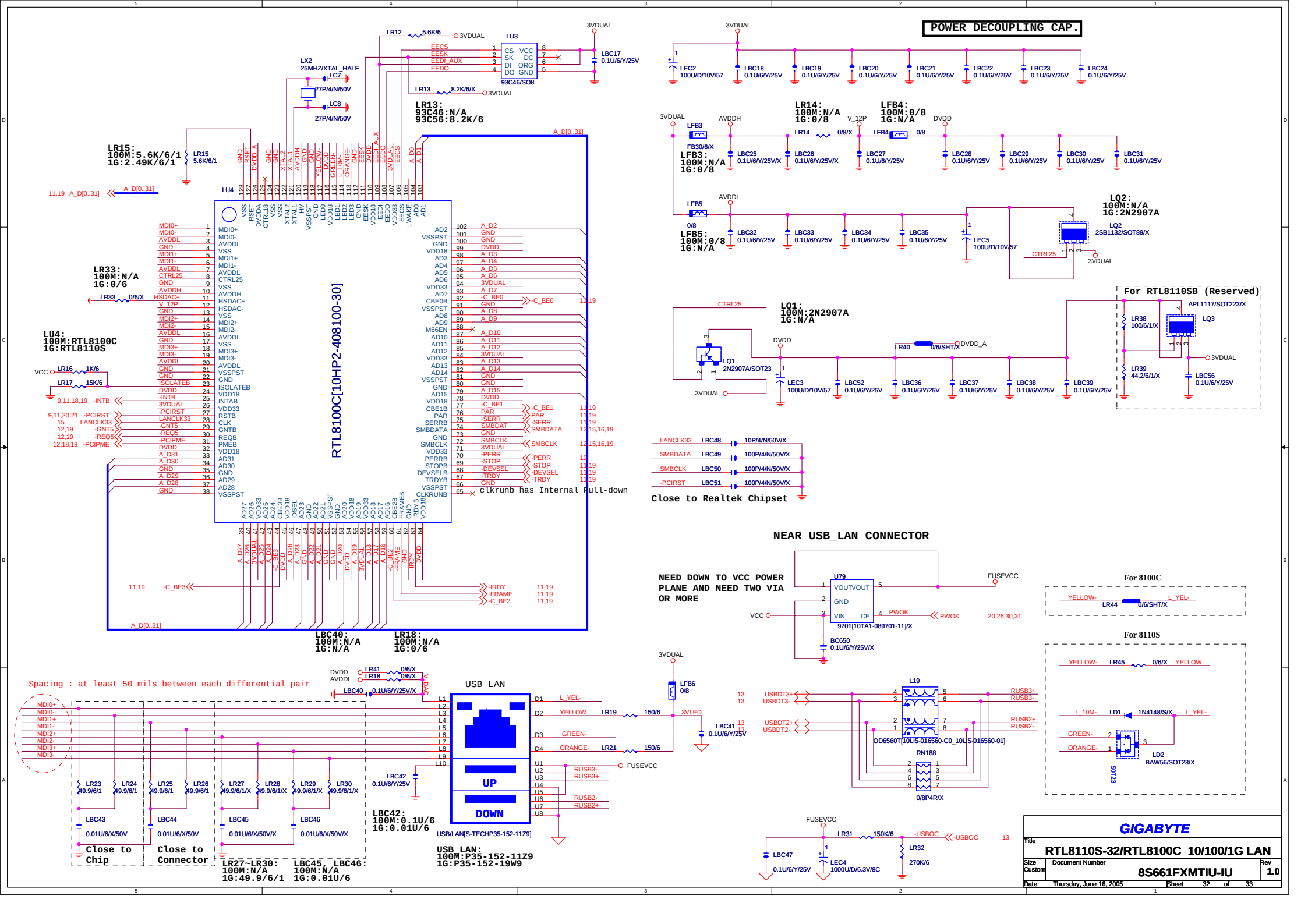
POWER DECOUPLING CAP.
LU4
RTL8100C[10HP2-408100-30]
LU3
93C46/SO8
LR13:
93C46:N/A
93C56:8.2K/6
LR15:
100M:5.6K/6/1
1G:2.49K/6/1
LR33:
100M:N/A
1G:0/6
LU4:
100M:RTL8100C
1G:RTL8110S
LX2
25MHZ/XTAL_HALF
LR14:
100M:N/A
1G:0/8
LFB4:
100M:0/8
1G:N/A
LFB3:
100M:N/A
1G:0/8
LFB5:
100M:0/8
1G:N/A
LQ2:
100M:N/A
1G:2N2907A
LQ2
2SB1132/SOT89/X
LQ1:
100M:2N2907A
1G:N/A
LQ1
2N2907A/SOT23
For RTL8110SB (Reserved)
APL1117/SOT223/X
LQ3
Clkrunb has Internal Pull-down
Close to Realtek Chipset
NEAR USB_LAN CONNECTOR
NEED DOWN TO VCC POWER PLANE AND NEED TWO VIA OR MORE
U79
9701[10TA1-089701-11]/X
For 8100C
For 8110S
Spacing : at least 50 mils between each differential pair
USB_LAN
UP
DOWN
USB/LAN[S-TECHP35-152-11Z9]
LBC40:
100M:N/A
1G:N/A
LR18:
100M:N/A
1G:0/6
LBC42:
100M:0.1U/6
1G:0.01U/6
USB_LAN:
100M:P35-152-11Z9
1G:P35-152-19W9
LR27~LR30:
100M:N/A
1G:49.9/6/1
LBC45, LBC46:
100M:N/A
1G:0.01U/6
Close to Chip
Close to Connector
L19
OD6560T[10LI5-016560-C0_10LI5-016560-01]
RN188
0/8P4R/X
GIGABYTE
Title
RTL8110S-32/RTL8100C 10/100/1G LAN
Size
Custom
Document Number
8S661FXMTIU-IU
Rev
1.0
Date: Thursday, June 16, 2005
Sheet 32 of 33

# VGA CONNECTOR 1

SIS 648(FX) NO POP

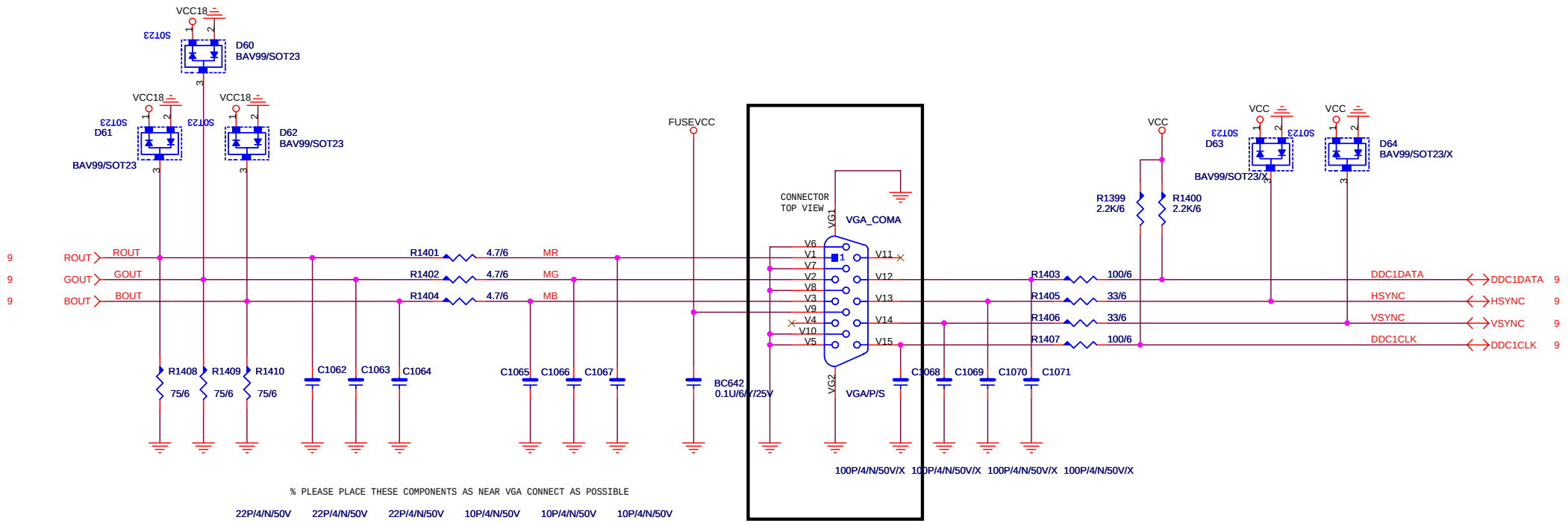


## DUAL LAYOUT(VGA/COM)

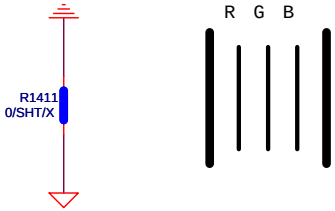


REV 0.2 VGA GND GUARD

| | | |
|---|---|---|
| GIGABYTE | | |
| Title: VGA CONNECTOR | | |
| Size: B | Document Number: 8S661FXMTIU-IU | Rev: 1.0 |
| Date: Thursday, June 16, 2005 | Sheet 33 of 33 | |