Cover Sheet	1
Block Diagram	2
GPIO	3
Intel mPGA478B CPU - Signals	4
Intel mPGA478B CPU - Power	5
Intel Springdale - Host Signals	6
Intel Springdale - Memory Signals	7
Intel Springdale - AGP Signals	8
DDR DIMM 1	9
DDR DIMM 2	10
Broadcom BCM 4401/5705	11
Intel ICH5 - PCI & IDE & AC97 Signals	12
Intel ICH5 - Other Signals	13
ICS952617 & FWH & FDD & TPM	14
LPC I/O -47M997	15
MPCI SKT & MDC	16
AGP 4X/8X Slot	17
ATA33/66/100 IDE & Video Connectors	18
PCI Slots 1 & I/O	19
USB Connectors	20
W83302 ACPI controller	21
Front Panel & Fan	22
VRM 10	23
OTHER	24
IEEE1394	25
AUDIO CODEC	26
AUDIO E & S	27
IDE & BlueBrid	28

MS(6797)

Version 100

Intel (R) Springdale (GMCH) + ICH5 Chipset
Intel Northwood & Prescott mPGA478B Processor

CPU:

Intel Northwood/Prescott

System Chipset:

Intel Springdale - GMCH (North Bridge)
Intel ICH5 (South Bridge)

On Board Chipset:

BIOS -- FWH EEPROM
AC'97 Codec --RealTek ALC655
LPC Super I/O -- SMSC 47M997
LAN --Broadcom BCM4401/5705
CLOCK --ICS 952617

Main Memory:

DDR * 2 (Max 2GB)

Expansion Slots:

PCI2.3 SLOT *1

PWM:

Controller: Intersil 6556B

Block Diagram

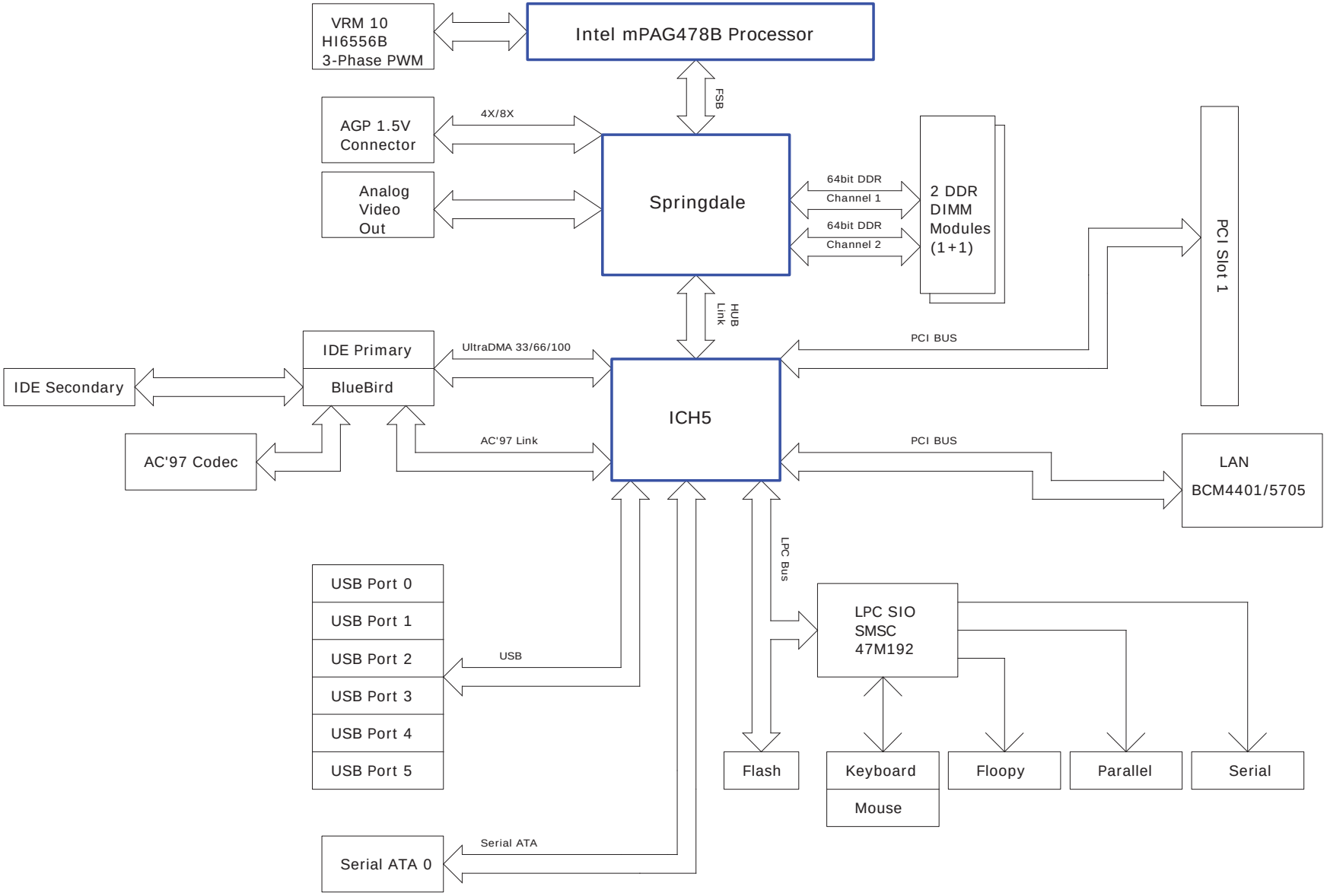

MSI	MICRO-STAR INt'L CO., LTD.	
Title	BLOCK DIAGRAM	
Size	Document Number MS-6797	Rev 10
Date: Monday, October 27, 2003	Sheet 2 of 30	

ICH5

GPIO Pin	Type	Function	Power well	
GPIO 0	I	ISA_REQ#	MAIN	
GPIO 1	I	PREQ#5	MAIN	
GPIO 2	I	PIRQ#E	MAIN	
GPIO 3	I	PIRQ#F	MAIN	
GPIO 4	I	PIRQ#G	MAIN	
GPIO 5	I	PIRQ#H	MAIN	
GPIO 6	I	**SIO_SMI#**	MAIN	
GPIO 7	I	**GPI7**	MAIN	
GPIO 8	I	**GPI8**	RESUME	
GPIO 9	I	OC4#	RESUME	
GPIO 10	I	OC5#	RESUME	
GPIO 11	I	**RECOVER#**	RESUME	
GPIO 12	I	GPI12	RESUME	
GPIO 13	I	**SIO_PME#**	RESUME	
GPIO 14	I	OC#6	RESUME	
GPIO 15	I	OC#7	RESUME	
GPIO 16	O	ISA_GNT#	MAIN	
GPIO 17	O	PGNT#5	MAIN	
GPIO 18	O	**GPO18**	MAIN	
GPIO 19	O	GPO19	MAIN	
GPIO 20	O	GPO20	MAIN	
GPIO 21	O	**ISA_NOGO**	MAIN	
GPIO 22	OD	GPO22	MAIN	
GPIO 23	O	GPO23	MAIN	
GPIO 24	I/O	**CD_SMI#**	RESUME	default output
GPIO 25	I/O	GPIO25	RESUME	default output
GPIO 27	I/O	**GPO27**	RESUME	default output
* GPIO 28	I/O	GPIO28	RESUME	default output
GPIO 32	I/O	**BIOS_WP#**	MAIN	default output
GPIO 33	I/O	**SATA LED**	MAIN	default output
GPIO 34	I/O	GPIO34	MAIN	default output
GPIO 40	I	PREQ#4	MAIN	
GPIO 41	I	GPI41	MAIN	
GPIO 48	O	PGNT#4	MAIN	
GPIO 49	OD	CPUPWRGD	MAIN	

FWH

GPIO Pin	Type	Function
GPI 0	I	PD_DET
GPI 1	I	SD_DET
* GPI 2	I	Pull down through 1K ohms (unused)
GPI 3	I	Pull down through 1K ohms (unused)
GPI 4	I	Pull down through 1K ohms (unused)

SIO

GPIO Pin	Type	Function
GP26	I	VID5
GP43	I	VID4

PCI Config.

DEVICE	MCP1 INT Pin	REQ#/GNT#	IDSEL	CLOCK	CLK GEN PIN OUT
PCI Slot 1	INTA# INTB# INTC# INTD#	PCI_REQ#0 PCI_GNT#0	AD16	PCICLK0	13 (PCI_CLK0)
MPCI	INTB# INTC#	PCI_REQ#3 PCI_GNT#3	AD21	PCICLK1	14 (PCI_CLK1)

DDR DIMM Config.

DEVICE	ADDRESS	CLOCK
DIMM 1	1010000B	MCLK_A0/MCLK_A0# MCLK_A1/MCLK_A1# MCLK_A2/MCLK_A2#
DIMM 3	1010010B	MCLK_B0/MCLK_B0# MCLK_B1/MCLK_B1# MCLK_B2/MCLK_B2#

PCI RESET DEVICE

Signals	Target
PCIRST#_ICH5	AGP slot, FWH, MS5,
PCIRST#1	Springdale,LAN, Super I/O,1394,TPM
PCIRST#2	PCI slot 1, ext PCI slot
HD_RST#	Primary, Scondary IDE

CPU SIGNAL BLOCK

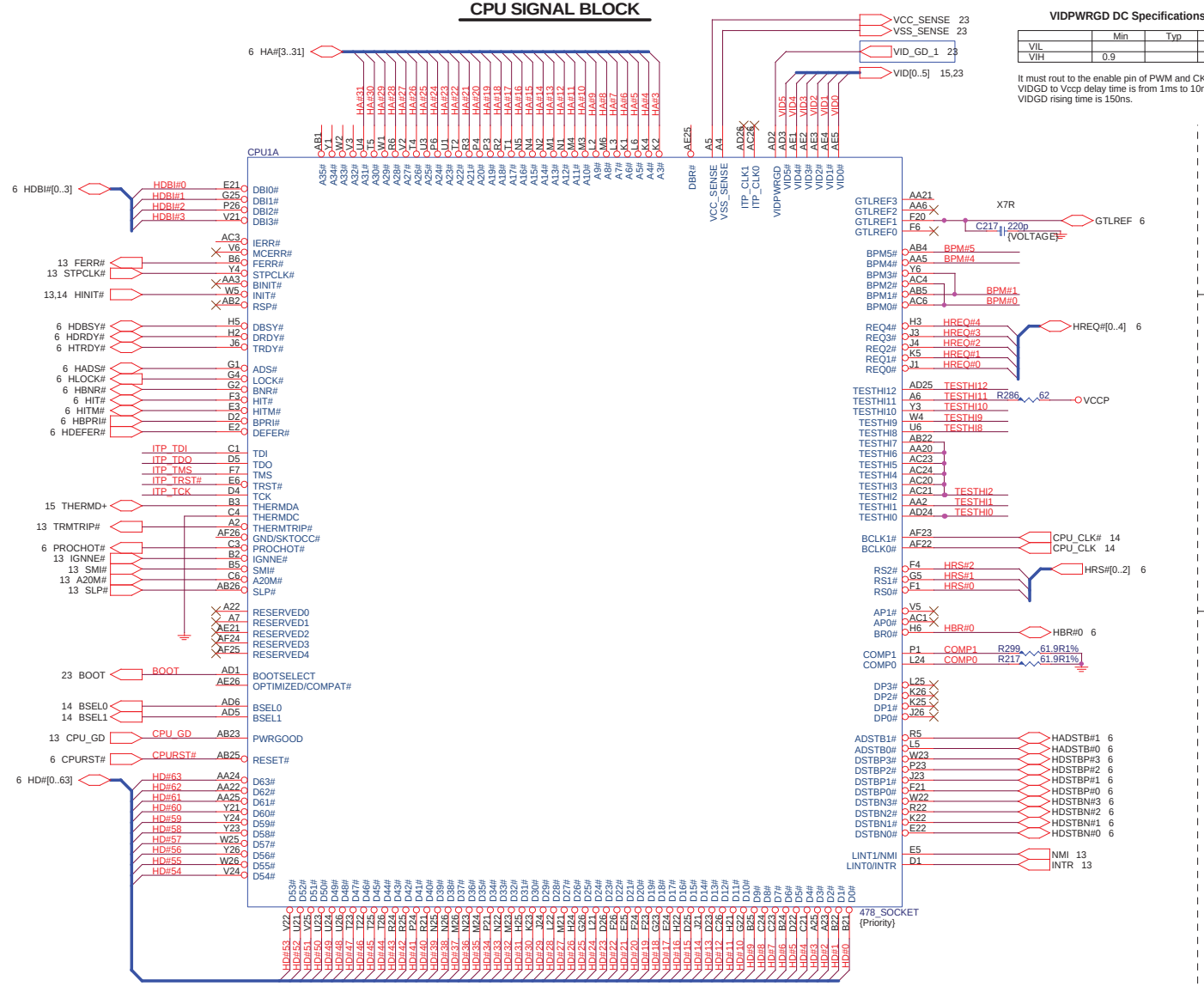

VIDPWRGD DC Specifications

	Min	Typ	Max
VIL			0.3
VIH	0.9		

It must rout to the enable pin of PWM and CK-409.
VIDGD to Vccp delay time is from 1ms to 10ms.
VIDGD rising time is 150ns.

CPU GTL REFERNCE VOLTAGE BLOCK

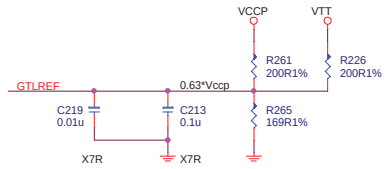

CPU ITP BLOCK

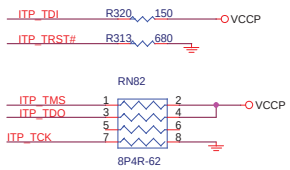

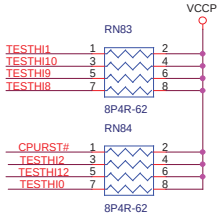

CPU STRAPPING RESISTORS

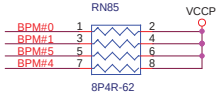

ALL COMPONENTS CLOSE TO CPU

MICRO-STAR INt'L CO., LTD.	
Title	Intel mPGA478B - Signals
Size	Document Number: MS-6797 — Rev 10
Date: Monday, October 27, 2003	Sheet 4 of 30

CPU VOLTAGE BLOCK

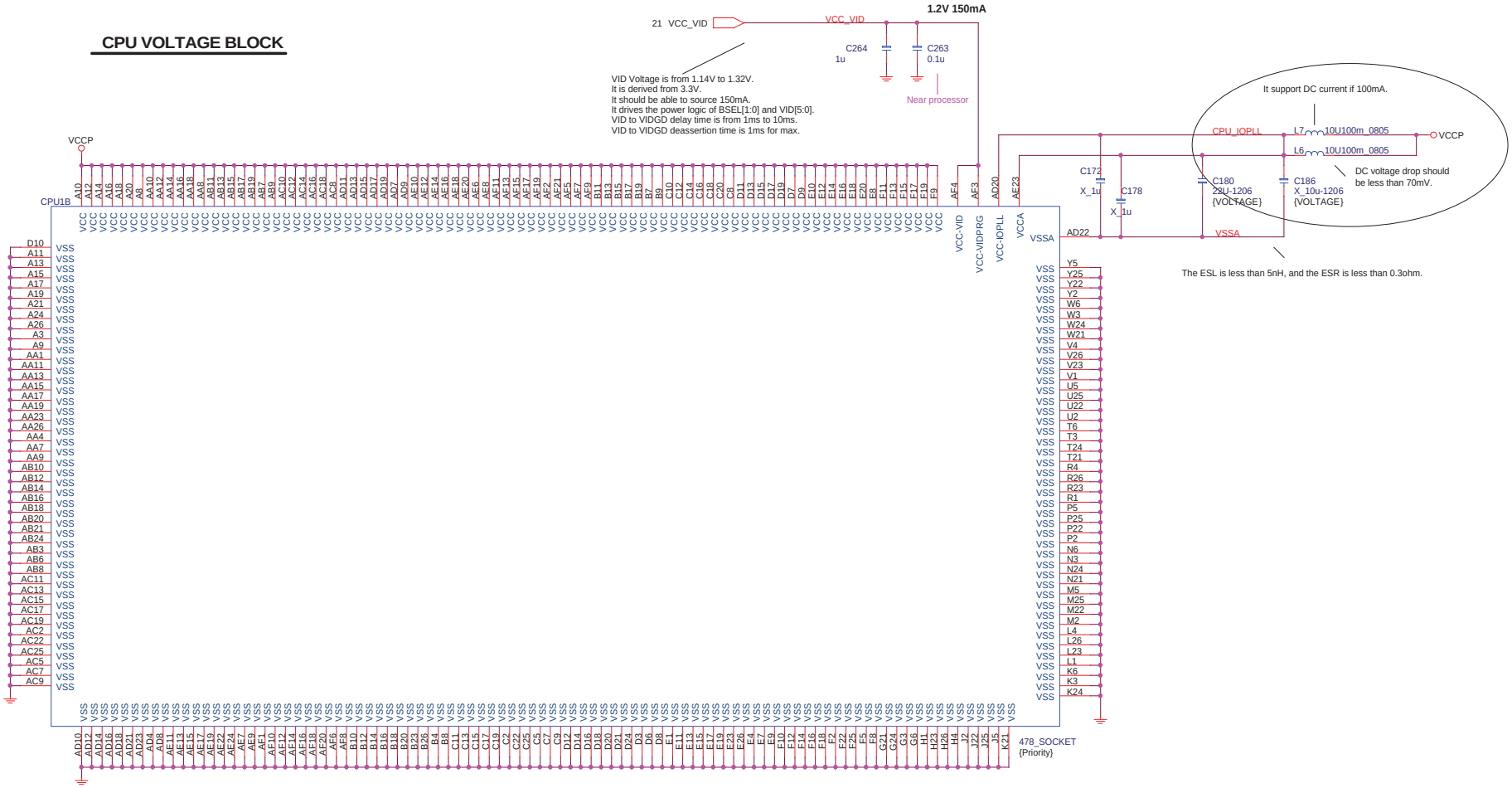

CPU DECOUPLING CAPACITORS

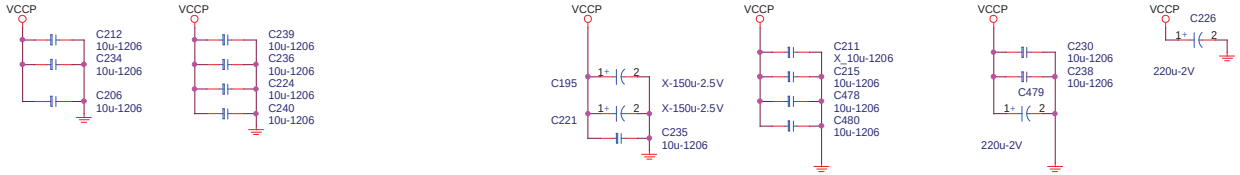

MSI	MICRO-STAR INt'L CO., LTD.	
Title	Intel mPGA478B - Power	
Size	Document Number MS-6797	Rev 10
Date: Monday, October 27, 2003	Sheet 5 of 30	

ICH_SYNC#	MS5_POK	ICH_PWROK
0	1	0
0	0	0
1	0	0
1	1	1

MICRO-STAR INt'L CO., LTD.

Title: Intel Springdale - CPU Signals

Size | Document Number: MS-6797 | Rev 10

Date: Monday, October 27, 2003 | Sheet 6 of 30

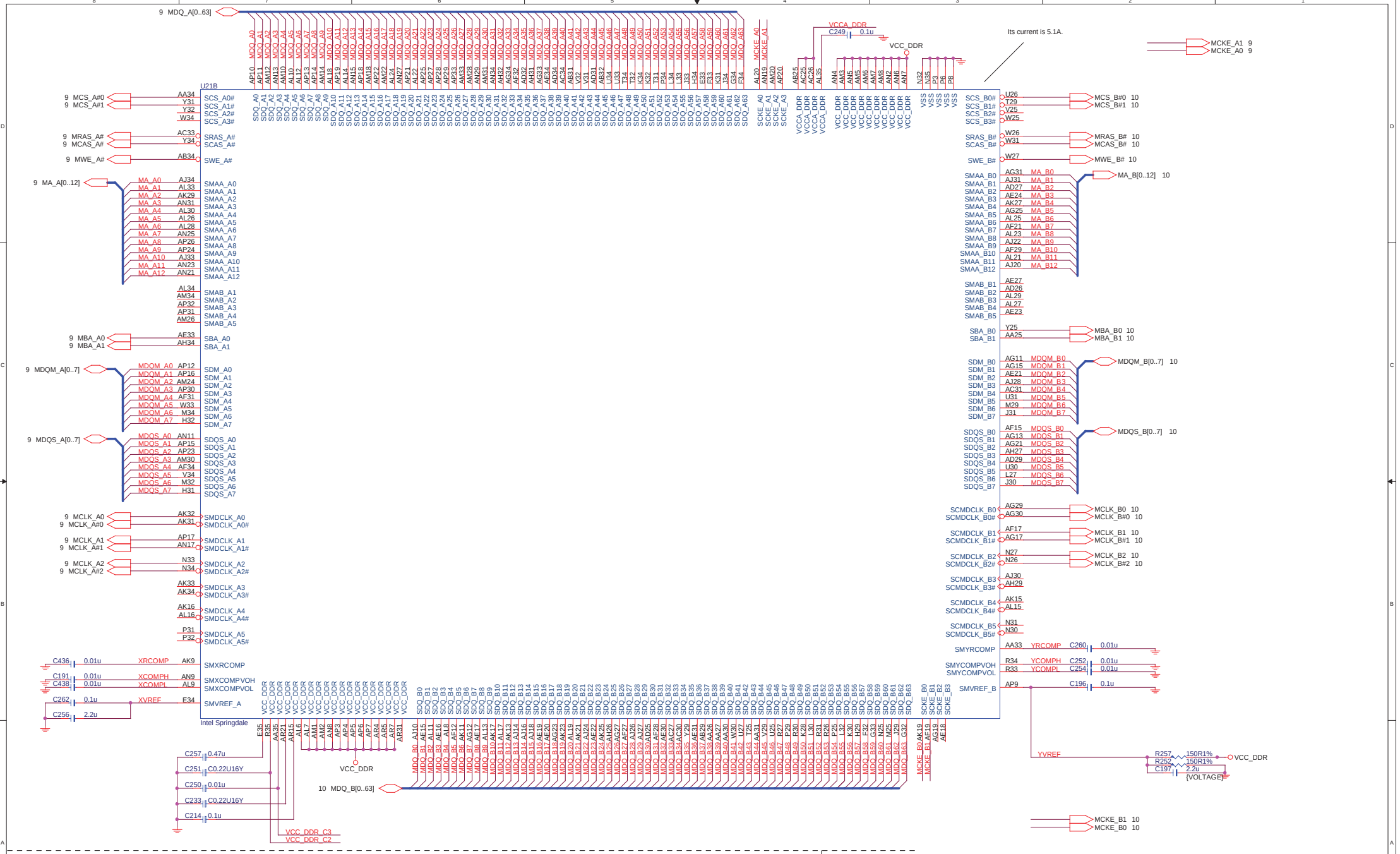
U21B
Intel Springdale
Its current is 5.1A.
VCCA_DDR
VCC_DDR
9 MDQ_A[0..63]
9 MCS_A#0
9 MCS_A#1
9 MRAS_A#
9 MCAS_A#
9 MWE_A#
9 MA_A[0..12]
9 MBA_A0
9 MBA_A1
9 MDQM_A[0..7]
9 MDQS_A[0..7]
9 MCLK_A0
9 MCLK_A#0
9 MCLK_A1
9 MCLK_A#1
9 MCLK_A2
9 MCLK_A#2
MCKE_A1 9
MCKE_A0 9
MCS_B#0 10
MCS_B#1 10
MRAS_B# 10
MCAS_B# 10
MWE_B# 10
MA_B[0..12] 10
MBA_B0 10
MBA_B1 10
MDQM_B[0..7] 10
MDQS_B[0..7] 10
MCLK_B0 10
MCLK_B#0 10
MCLK_B1 10
MCLK_B#1 10
MCLK_B2 10
MCLK_B#2 10
MCKE_B1 10
MCKE_B0 10
10 MDQ_B[0..63]
VCC_DDR_C3
VCC_DDR_C2
values still need verification
VCC_AGP
MICRO-STAR INt'L CO., LTD.
Title
Intel Springdale - Memory Signals
Size
Document Number
MS-6797
Rev
10
Date: Monday, October 27, 2003
Sheet 7 of 30

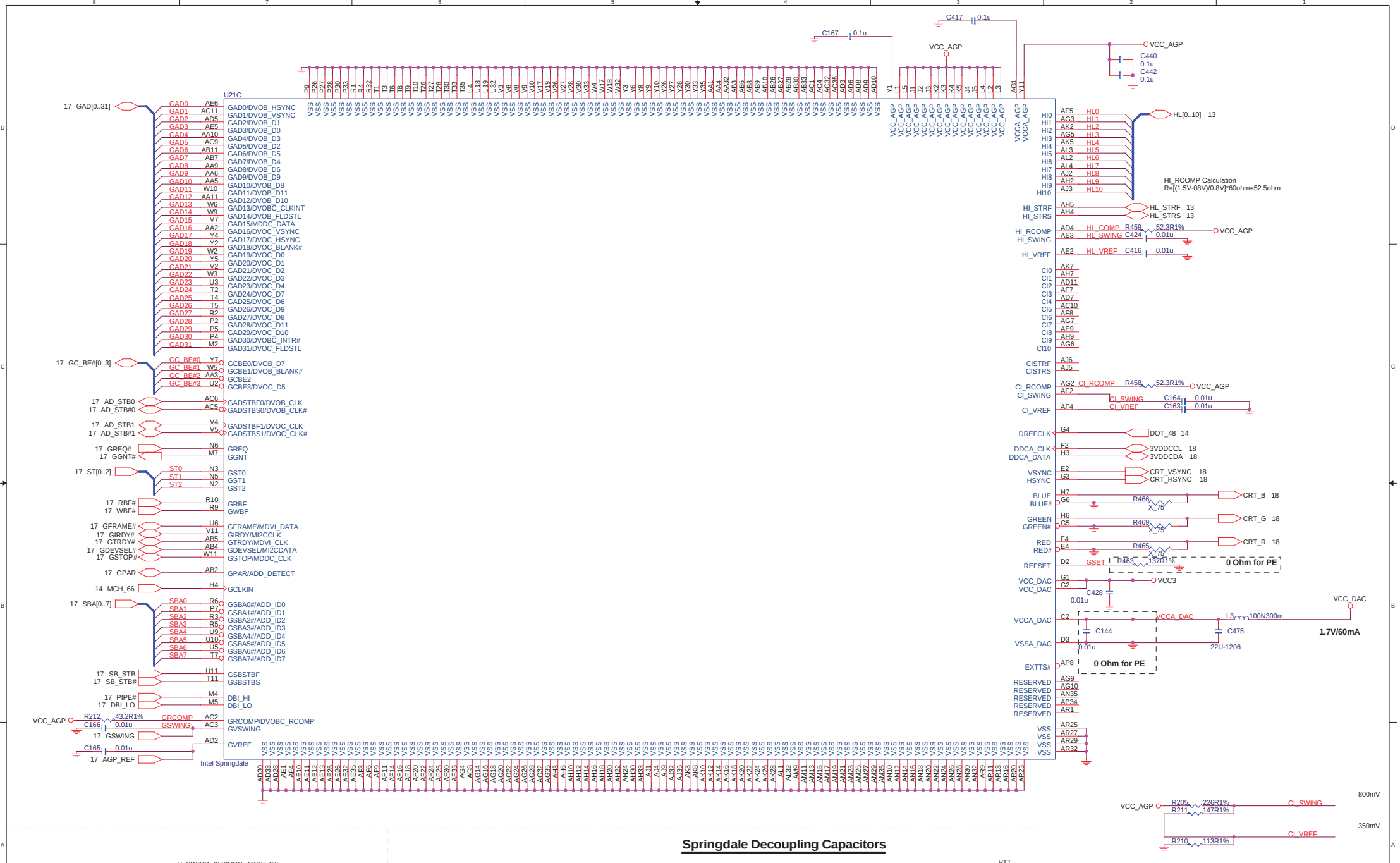
U21C
Intel Springdale
17 GAD[0..31]
17 GC_BE#[0..3]
17 AD_STB0
17 AD_STB#0
17 AD_STB1
17 AD_STB#1
17 GREQ#
17 GGNT#
17 ST[0..2]
17 RBF#
17 WBF#
17 GFRAME#
17 GIRDY#
17 GTRDY#
17 GDEVSEL#
17 GSTOP#
17 GPAR
14 MCH_66
17 SBA[0..7]
17 SB_STB
17 SB_STB#
17 PIPE#
17 DBI_LO
17 GSWING
17 AGP_REF
VCC_AGP
C417 0.1u
C167 0.1u
C440 0.1u
C442 0.1u
HL[0..10] 13
HI_RCOMP Calculation
R=[(1.5V-08V)/0.8V]*60ohm=52.5ohm
HL_STRF 13
HL_STRS 13
R459 52.3R1%
C424 0.01u
C416 0.01u
R458 52.3R1%
C164 0.01u
C163 0.01u
DOT_48 14
3VDDCCL 18
3VDDCDA 18
CRT_VSYNC 18
CRT_HSYNC 18
CRT_B 18
CRT_G 18
CRT_R 18
R466 X_75
R469 X_75
R465 X_75
R463 137R1%
0 Ohm for PE
VCC3
C428 0.01u
VCC_DAC
VCCA_DAC
L3 100N300m
C144 0.01u
C475 22U-1206
1.7V/60mA
VSSA_DAC
EXTTS#
RESERVED
VSS
R212 43.2R1%
C166 0.01u
C165 0.01u
GRCOMP
GSWING
R205 226R1%
R211 147R1%
R210 113R1%
CI_SWING
CI_VREF
800mV
350mV
H_SWING=(0.8*VCC_AGP)+-2%
R455 226R1%
R456 147R1%
C423 0.1u
HL_SWING
HL_VREF
R457 113R1%
C425 0.1u
H_SWING=(0.233*VCC_AGP)+-2%
Springdale Decoupling Capacitors
C437 0.1u
VCC_DDR
C482 10u-1206
C433 0.1u
C434 0.1u
VTT
C483 10u-1206
C168 1u
C169 0.1u
MICRO-STAR INt'L CO., LTD.
Title
Intel Springdale - AGP & HLink & LAN Signals
Size
Document Number
MS-6797
Rev
10
Date: Monday, October 27, 2003
Sheet 8 of 30

DDR DIMM1

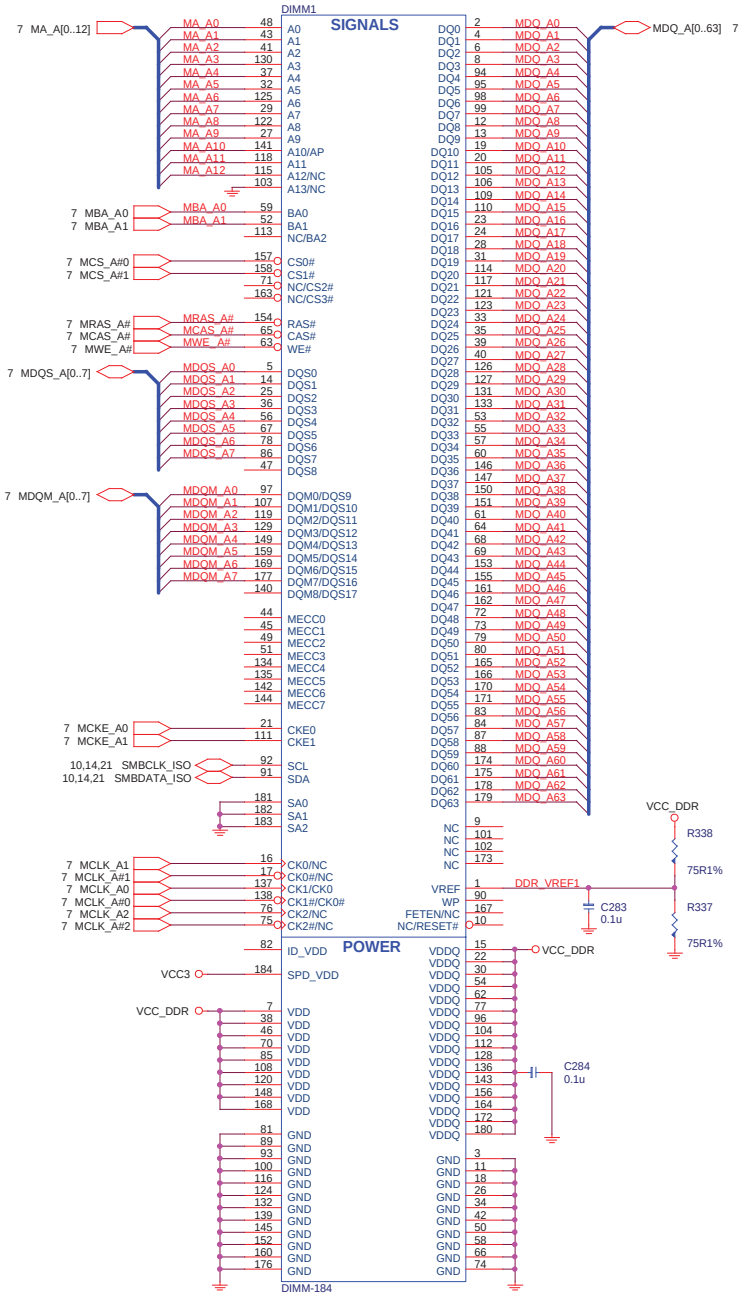

ADDR.=1010000B

DDR Terminational Resisitors

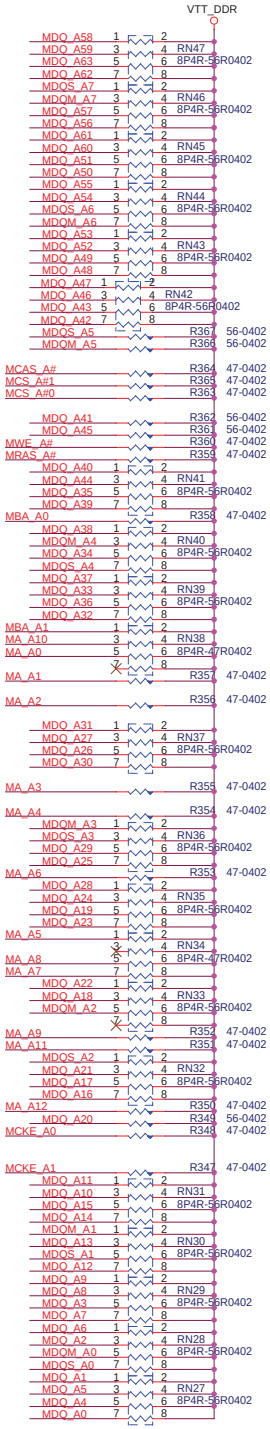

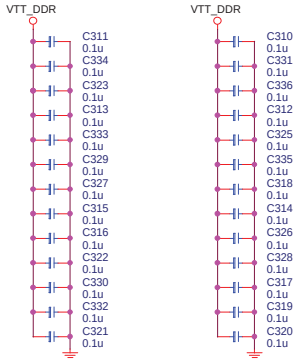

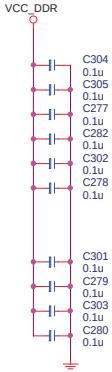

MICRO-STAR INt'L CO., LTD.	
Title	DDR DIMM 1 & 2
Size / Document Number	MS-6797
Rev	10
Date: Monday, October 27, 2003	Sheet 9 of 30

DDR DIMM3

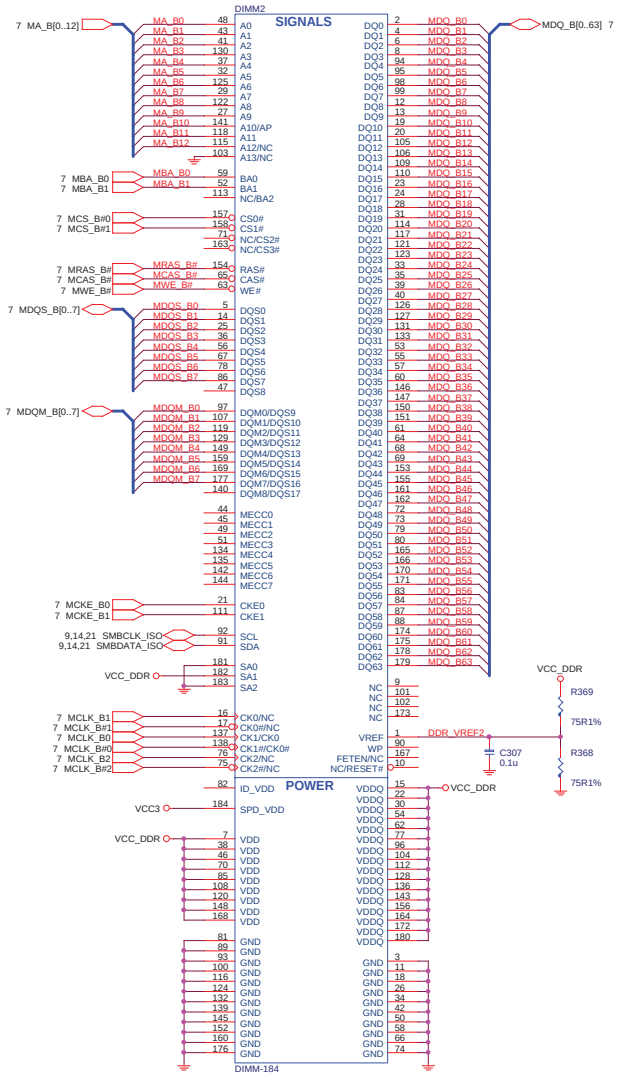

ADDR.=1010010B

DDR Terminational Resisitors

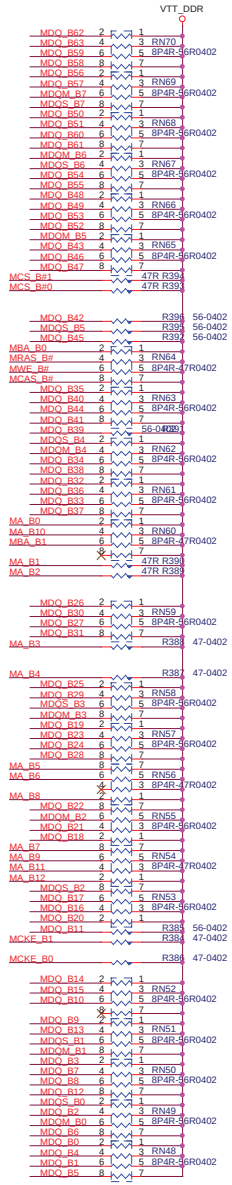

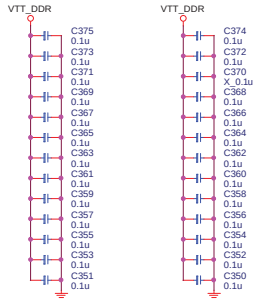

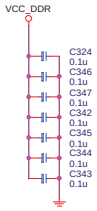

MICRO-STAR INt'L CO., LTD.	
Title	DIMM 3,4
Size / Document Number	MS-6797
Rev	10
Date: Monday, October 27, 2003	Sheet 10 of 30

Gigabit Ethernet MAC-PHY

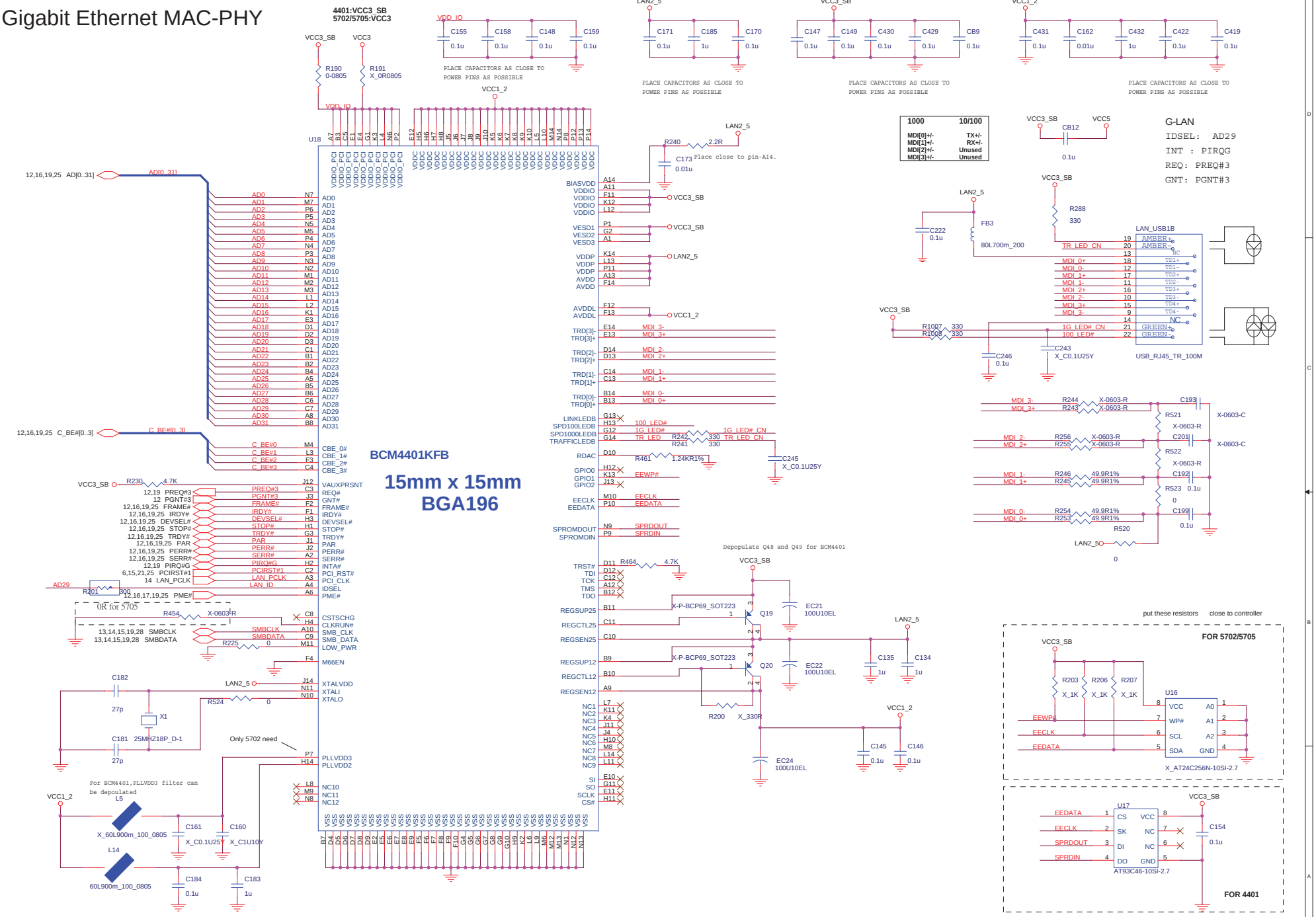

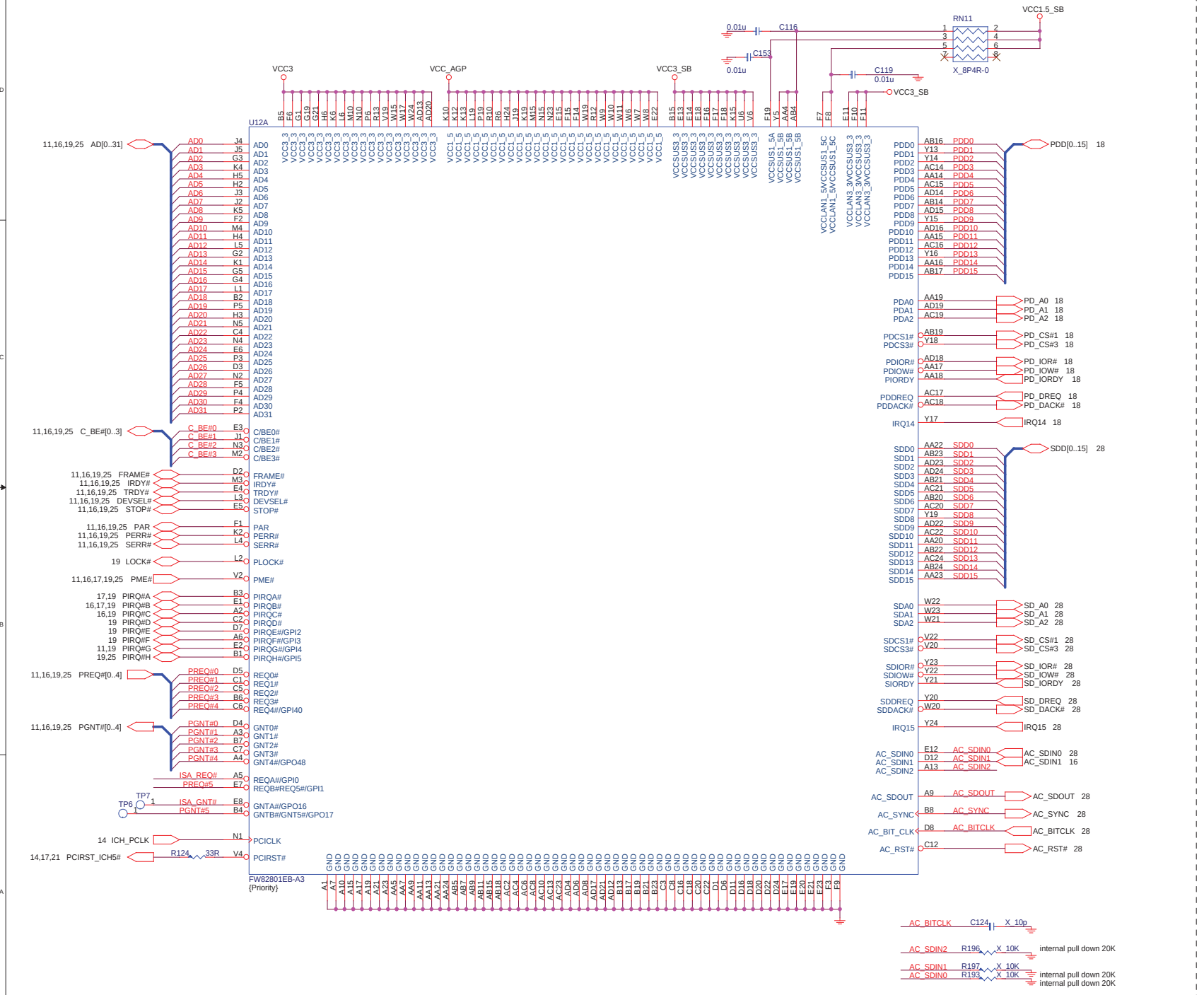

ICH5 Pull-Up / Down Resistors

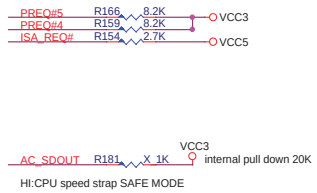

ICH5 Decoupling Capacitors

All caps be placed less than 100mils.

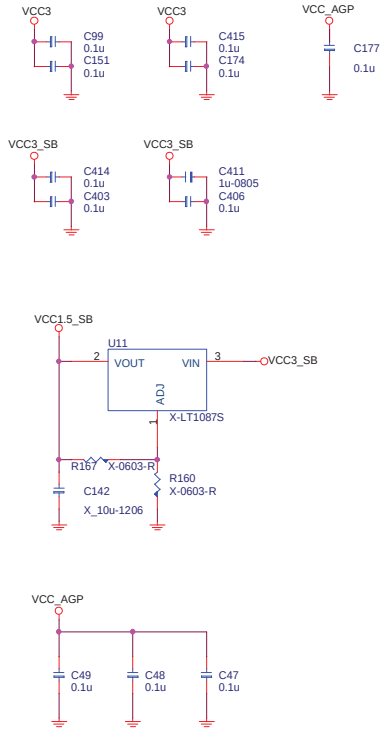

MICRO-STAR INt'L CO., LTD.

Title: Intel ICH5 - PCI & IDE & AC97 Signals

Size	Document Number	Rev
	MS-6797	10

Date: Monday, October 27, 2003 Sheet 12 of 30

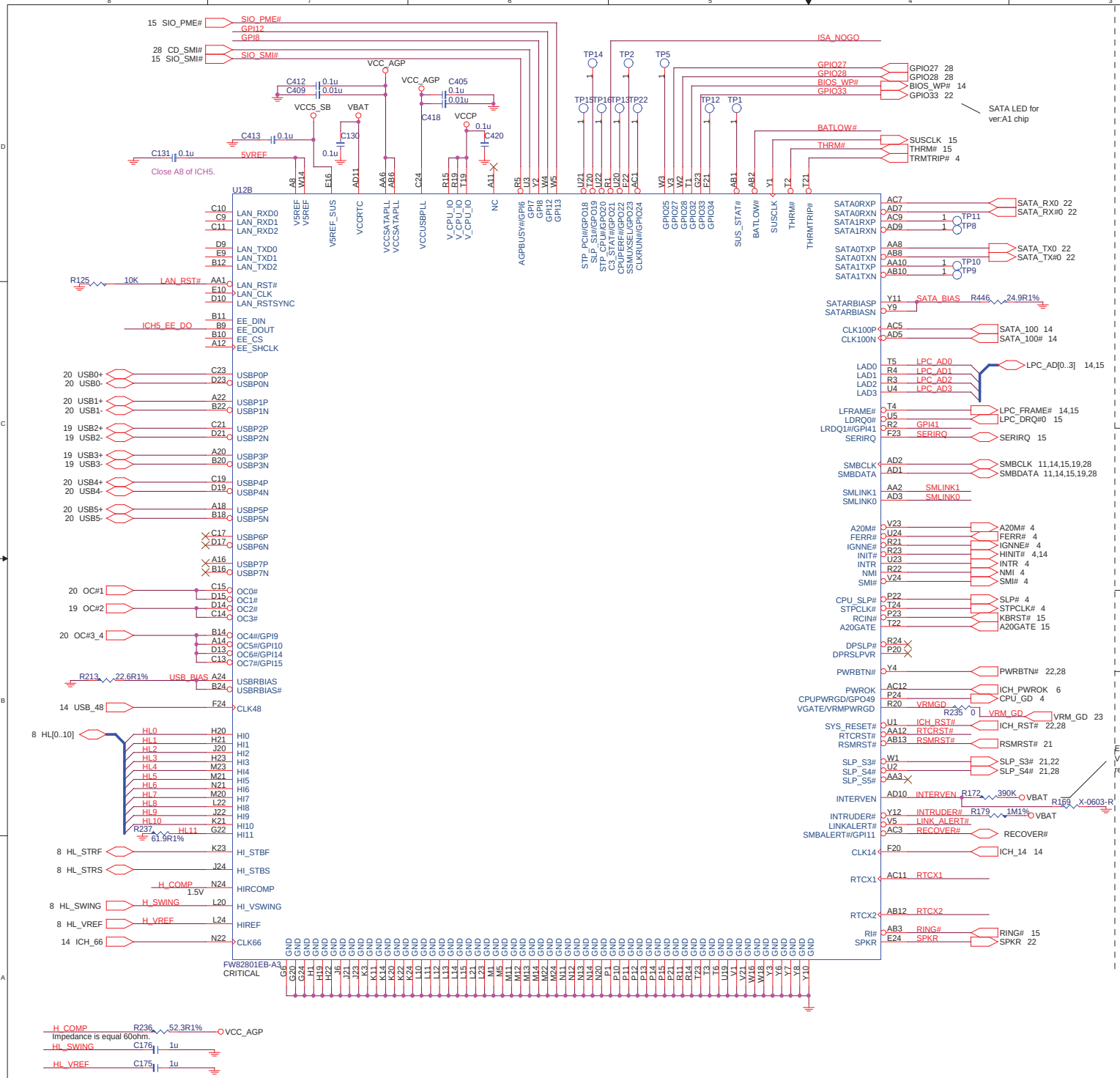

STRAPS

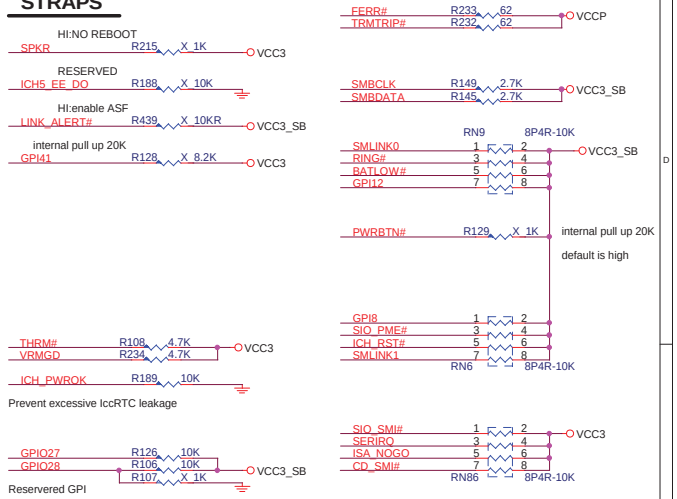

Recovery Button

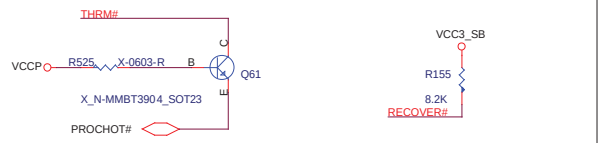

V5REF Sequencing Circuit

V5REF must be powered up before VCC3,or after within 0.7V

RTC BLOCK

* Put a GND Plane under X'TAL
* Please put this block close ICH5

CLR_CMOS	
1 - 2	Normal ★
2 - 3	Clear CMOS

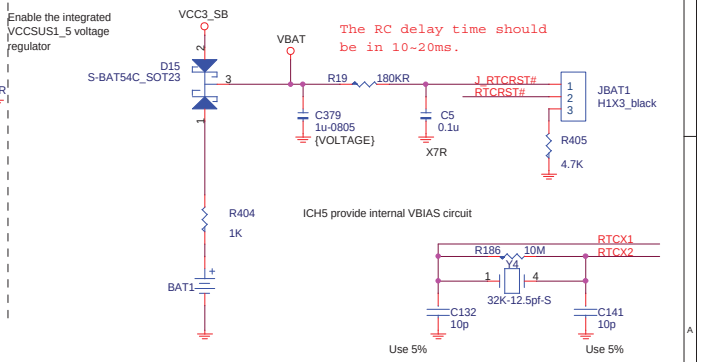

MICRO-STAR INt'L CO., LTD.

Title: Intel ICH5 - Other Signals

Size | Document Number: MS-6797 | Rev: 10

Date: Monday, October 27, 2003 | Sheet 13 of 30

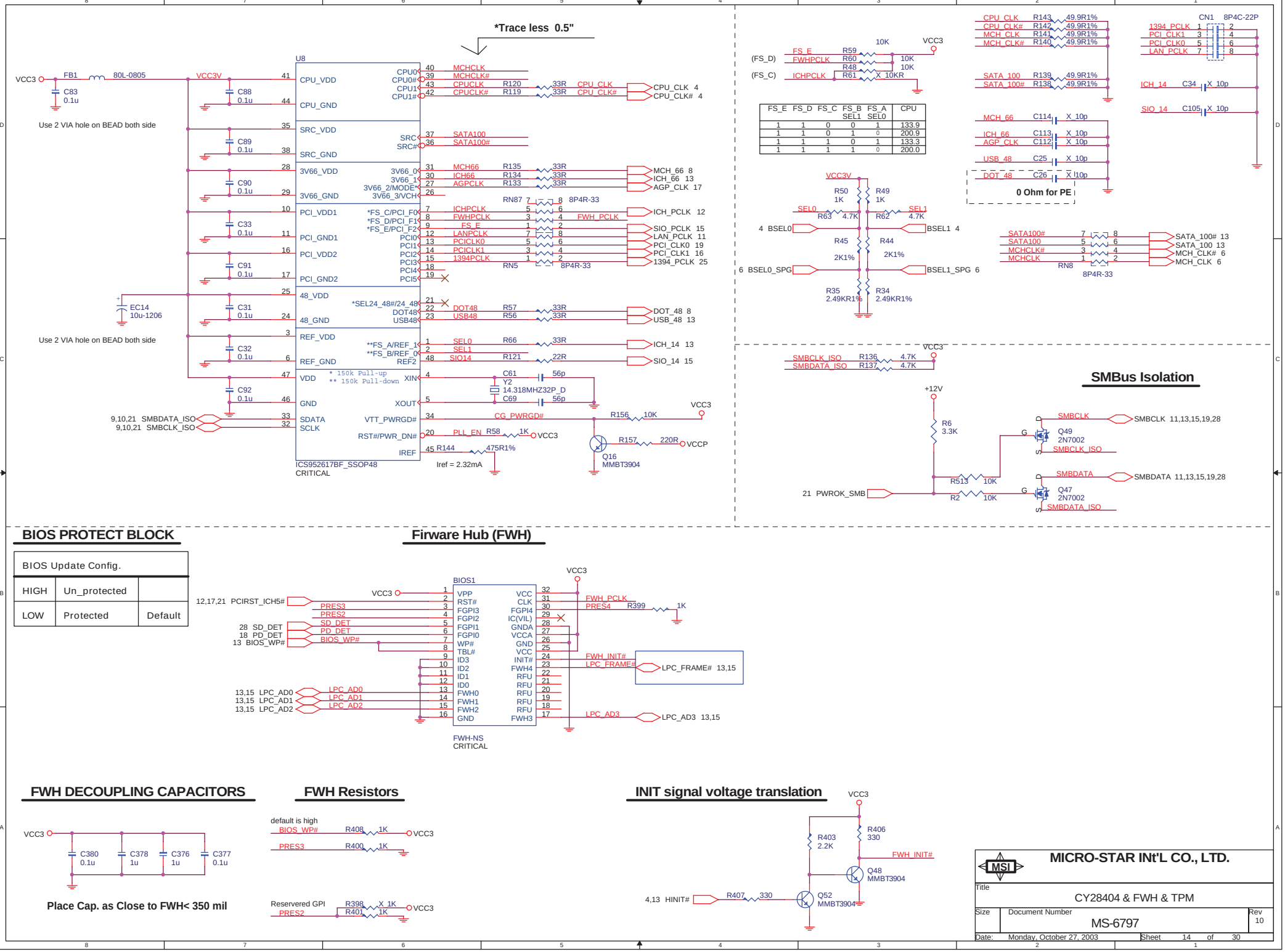
*Trace less 0.5"
U8
ICS952617BF_SSOP48
CRITICAL
Use 2 VIA hole on BEAD both side
Use 2 VIA hole on BEAD both side
VCC3
VCC3V
FB1
80L-0805
C83 0.1u
C88 0.1u
C89 0.1u
C90 0.1u
C33 0.1u
C91 0.1u
C31 0.1u
C32 0.1u
C92 0.1u
EC14 10u-1206
CPU_VDD
CPU_GND
SRC_VDD
SRC_GND
3V66_VDD
3V66_GND
PCI_VDD1
PCI_GND1
PCI_VDD2
PCI_GND2
48_VDD
48_GND
REF_VDD
REF_GND
VDD
GND
SDATA
SCLK
XIN
XOUT
VTT_PWRGD#
RST#/PWR_DN#
IREF
* 150k Pull-up
** 150k Pull-down
9,10,21 SMBDATA_ISO
9,10,21 SMBCLK_ISO
MCHCLK
MCHCLK#
CPUCLK
CPUCLK#
SATA100
SATA100#
MCH66
ICH66
AGPCLK
ICHPCLK
FWHPCLK
LANPCLK
PCICLK0
PCICLK1
1394PCLK
DOT48
USB48
SEL0
SEL1
SIO14
C61 56p
Y2 14.318MHZ32P_D
C69 56p
CG_PWRGD#
PLL_EN
R144 475R1%
Iref = 2.32mA
CPU_CLK
CPU_CLK#
FWH_PCLK
ICH_PCLK 12
SIO_PCLK 15
LAN_PCLK 11
PCI_CLK0 19
PCI_CLK1 16
1394_PCLK 25
DOT_48 8
USB_48 13
ICH_14 13
SIO_14 15
R156 10K
R157 220R
VCCP
Q16 MMBT3904
R58 1K
CPU_CLK 4
CPU_CLK# 4
MCH_66 8
ICH_66 13
AGP_CLK 17
RN87 8P4R-33
RN5 8P4R-33
CPU_CLK R143 49.9R1%
CPU_CLK# R142 49.9R1%
MCH_CLK R141 49.9R1%
MCH_CLK# R140 49.9R1%
SATA_100 R139 49.9R1%
SATA_100# R138 49.9R1%
MCH_66 C114 X 10p
ICH_66 C113 X 10p
AGP_CLK C112 X 10p
USB_48 C25 X 10p
DOT_48 C26 X 10p
0 Ohm for PE
CN1 8P4C-22P
1394_PCLK
PCI_CLK1
PCI_CLK0
LAN_PCLK
ICH_14 C34 X 10p
SIO_14 C105 X 10p
(FS_D) FS_E R59 10K
FWHPCLK R60 10K
R48 10K
(FS_C) ICHPCLK R61 X 10KR
FS_E FS_D FS_C FS_B SEL1 FS_A SEL0 CPU
1 1 0 0 1 133.9
1 1 0 1 0 200.9
1 1 1 0 1 133.3
1 1 1 1 0 200.0
R50 1K
R49 1K
SEL0 R63 4.7K
R62 4.7K SEL1
4 BSEL0
BSEL1 4
R45 2K1%
R44 2K1%
6 BSEL0_SPG
BSEL1_SPG 6
R35 2.49KR1%
R34 2.49KR1%
SATA100# 7 8 SATA_100# 13
SATA100 5 6 SATA_100 13
MCHCLK# 3 4 MCH_CLK# 6
MCHCLK 1 2 MCH_CLK 6
RN8 8P4R-33
SMBCLK_ISO R136 4.7K
SMBDATA_ISO R137 4.7K
SMBus Isolation
+12V
R6 3.3K
SMBCLK
SMBCLK 11,13,15,19,28
Q49 2N7002
SMBCLK_ISO
SMBDATA
SMBDATA 11,13,15,19,28
Q47 2N7002
SMBDATA_ISO
R513 10K
R2 10K
21 PWROK_SMB
BIOS PROTECT BLOCK
BIOS Update Config.
HIGH Un_protected
LOW Protected Default
Firware Hub (FWH)
BIOS1
FWH-NS
CRITICAL
12,17,21 PCIRST_ICH5#
PRES3
PRES2
28 SD_DET
18 PD_DET
13 BIOS_WP#
SD_DET
PD_DET
BIOS_WP#
13,15 LPC_AD0
13,15 LPC_AD1
13,15 LPC_AD2
LPC_AD0
LPC_AD1
LPC_AD2
VPP
RST#
FGPI3
FGPI2
FGPI1
FGPI0
WP#
TBL#
ID3
ID2
ID1
ID0
FWH0
FWH1
FWH2
GND
VCC
CLK
FGPI4
IC(VIL)
GNDA
VCCA
GND
VCC
INIT#
FWH4
RFU
RFU
RFU
RFU
RFU
FWH3
FWH_PCLK
PRES4
R399 1K
FWH_INIT#
LPC_FRAME#
LPC_FRAME# 13,15
LPC_AD3
LPC_AD3 13,15
FWH DECOUPLING CAPACITORS
C380 0.1u
C378 1u
C376 1u
C377 0.1u
Place Cap. as Close to FWH< 350 mil
FWH Resistors
default is high
BIOS_WP# R408 1K
PRES3 R400 1K
Reservered GPI
PRES2
R398 X 1K
R401 1K
INIT signal voltage translation
R403 2.2K
R406 330
FWH_INIT#
Q48 MMBT3904
4,13 HINIT#
R407 330
Q52 MMBT3904
MICRO-STAR INt'L CO., LTD.
Title
CY28404 & FWH & TPM
Size
Document Number
MS-6797
Rev 10
Date: Monday, October 27, 2003
Sheet 14 of 30

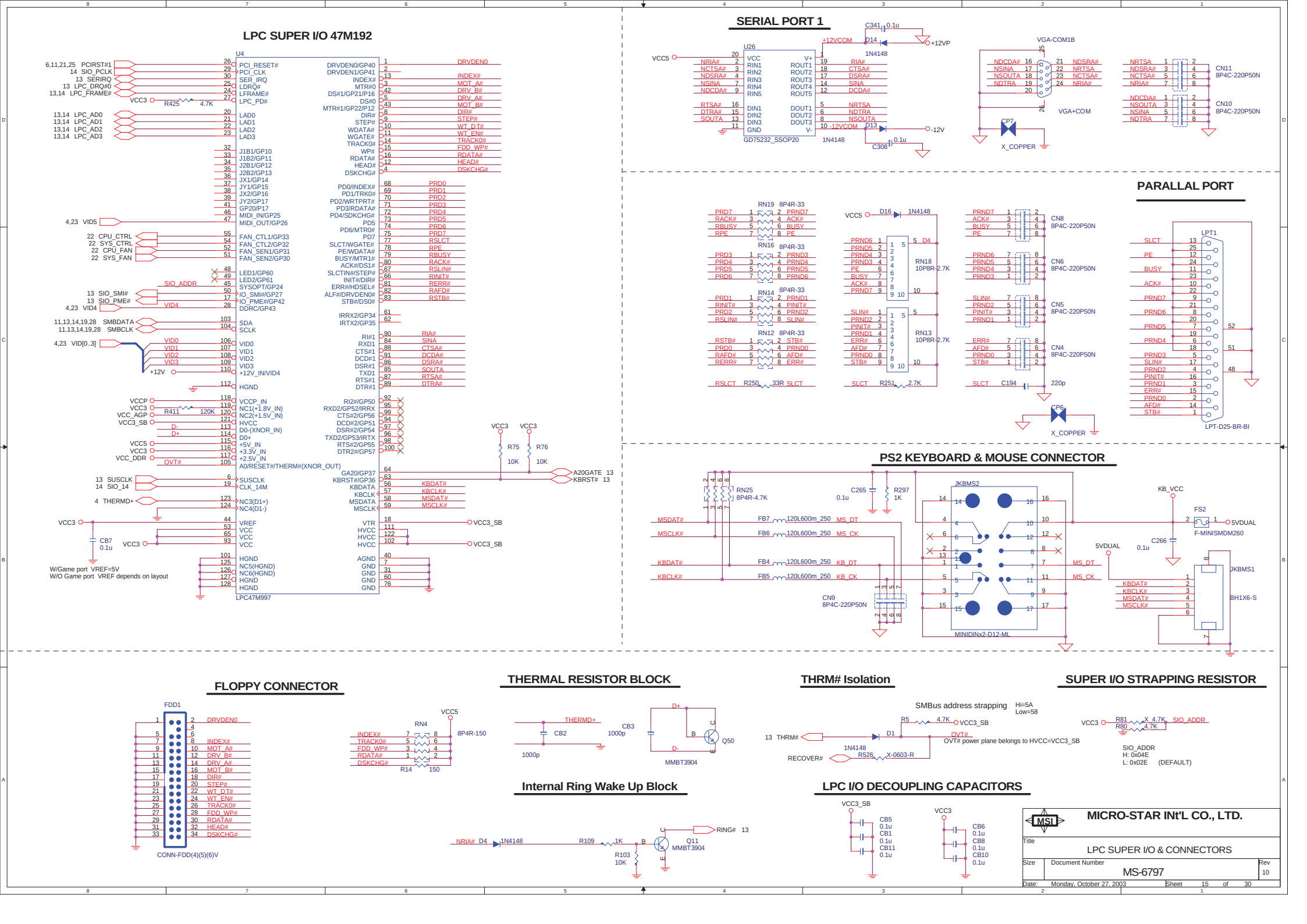
LPC SUPER I/O 47M192
U4
LPC47M997
SERIAL PORT 1
U26
GD75232_SSOP20
VGA-COM1B
VGA+COM
X_COPPER
CN11
8P4C-220P50N
CN10
8P4C-220P50N
PARALLAL PORT
RN19 8P4R-33
RN16 8P4R-33
RN14 8P4R-33
RN12 8P4R-33
RN18
10P8R-2.7K
RN13
10P8R-2.7K
CN8
8P4C-220P50N
CN6
8P4C-220P50N
CN5
8P4C-220P50N
CN4
8P4C-220P50N
LPT1
LPT-D25-BR-BI
PS2 KEYBOARD & MOUSE CONNECTOR
RN25
8P4R-4.7K
JKBMS2
MINIDINx2-D12-ML
CN9
8P4C-220P50N
FS2
F-MINISMDM260
JKBMS1
BH1X6-S
FLOPPY CONNECTOR
FDD1
CONN-FDD(4)(5)(6)V
THERMAL RESISTOR BLOCK
MMBT3904
THRM# Isolation
SMBus address strapping
Hi=5A
Low=58
OVT# power plane belongs to HVCC=VCC3_SB
SUPER I/O STRAPPING RESISTOR
SIO_ADDR
H: 0x04E
L: 0x02E (DEFAULT)
Internal Ring Wake Up Block
LPC I/O DECOUPLING CAPACITORS
MICRO-STAR INt'L CO., LTD.
Title
LPC SUPER I/O & CONNECTORS
Size
Document Number
MS-6797
Rev
10
Date: Monday, October 27, 2003
Sheet 15 of 30

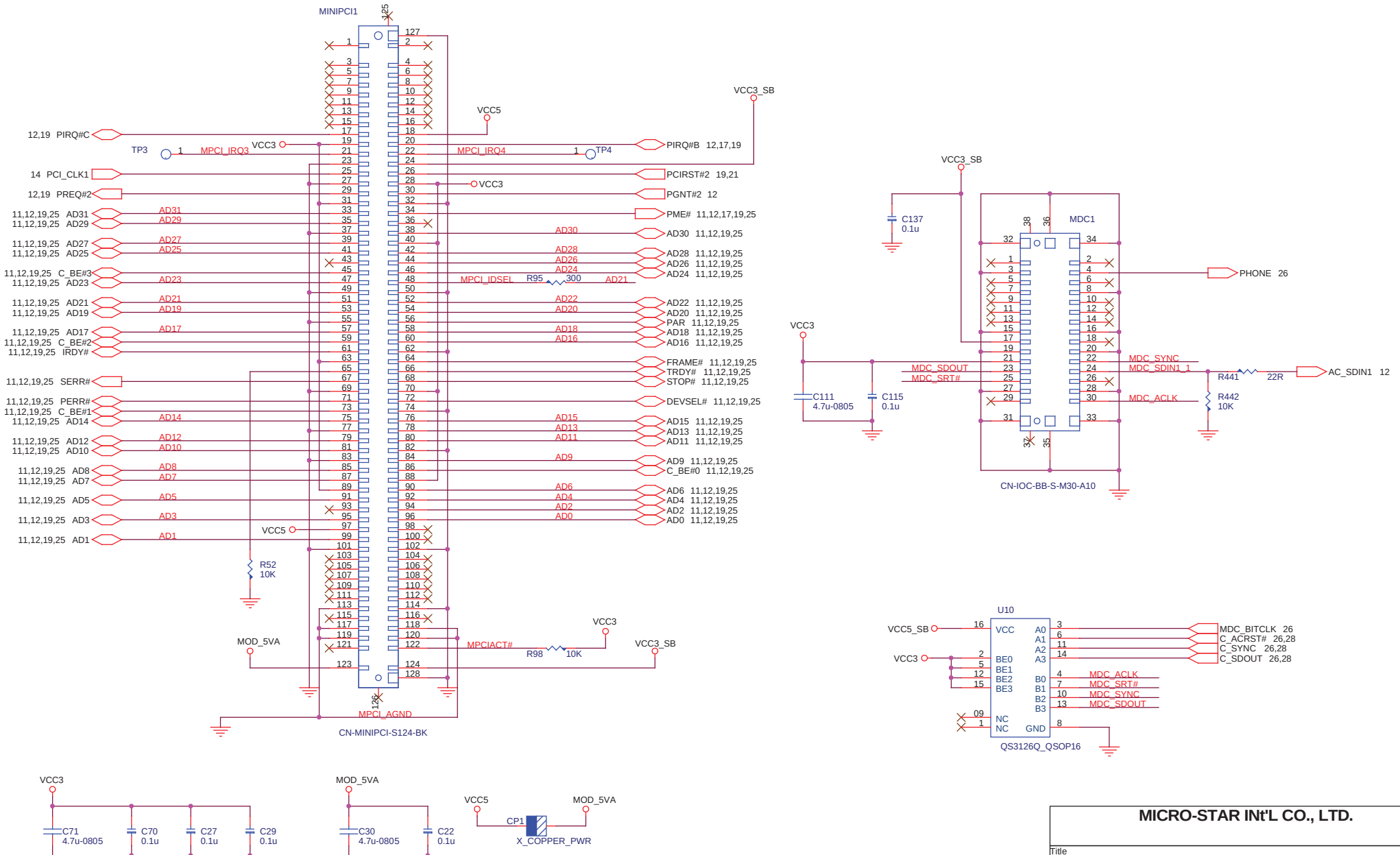

MICRO-STAR INt'L CO., LTD.

Title	MPCI & MDC	
Size	Document Number: MS-6797	Rev 10
Date: Monday, October 27, 2003	Sheet 16 of 30	

AGP 1.5V 4X/8X SLOT(AGP VER:3.0)

VCC5 = 60mils trace / 15 mils space

AGP Slot Imax

VCCg	2.0A
VCC3	6.0A
VCC12	1.0A
VCC5	2.0A
VCC3_SB	0.75A

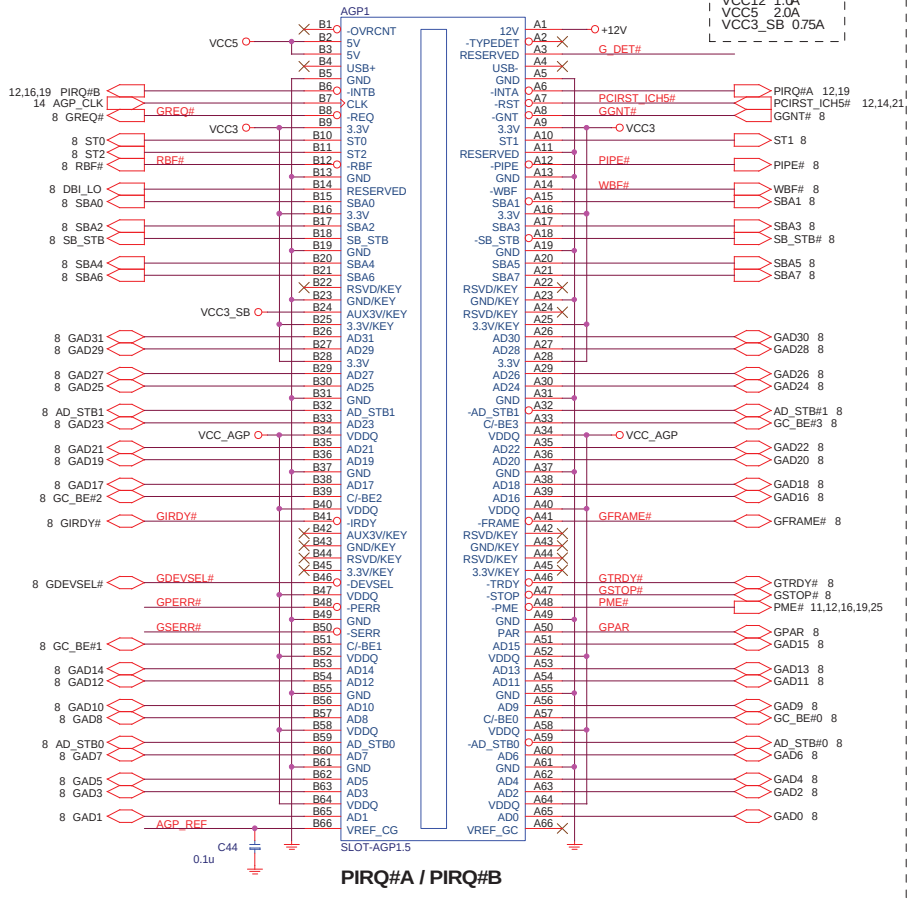

PIRQ#A / PIRQ#B

Springdale Reference & Swing Voltage Circuit

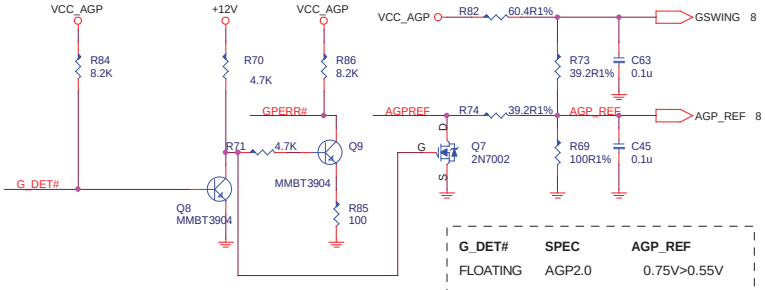

G_DET#	SPEC	AGP_REF
FLOATING	AGP2.0	0.75V>0.55V
LOW	AGP3.0	0.35V<0.55V

AGP TERMINATION RESISTORS

AGP SLOT DECOUPLING CAPACITORS

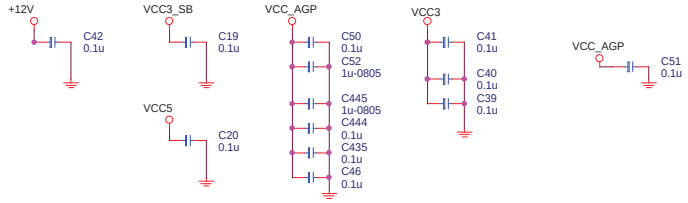

MSI **MICRO-STAR INt'L CO., LTD.**

Title	AGP 1.5V SLOT & Eext PCI	
Size	Document Number: MS-6797	Rev 10
Date: Monday, October 27, 2003	Sheet 17 of 30	

PRIMARY IDE BLOCK

ATA 33/66/100 IDE Connectors

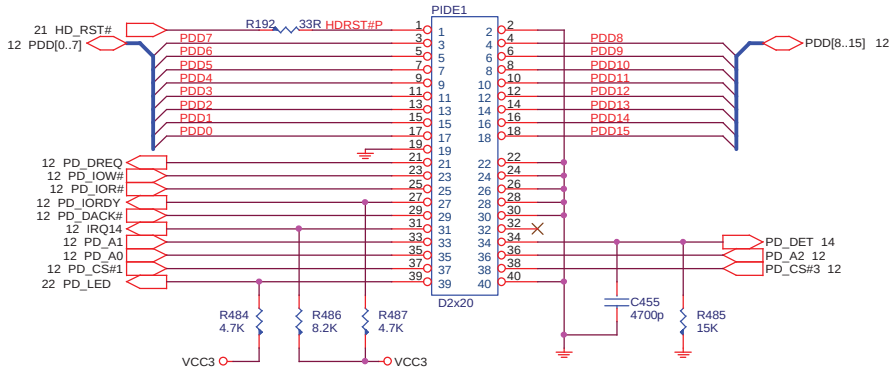

Video Connector

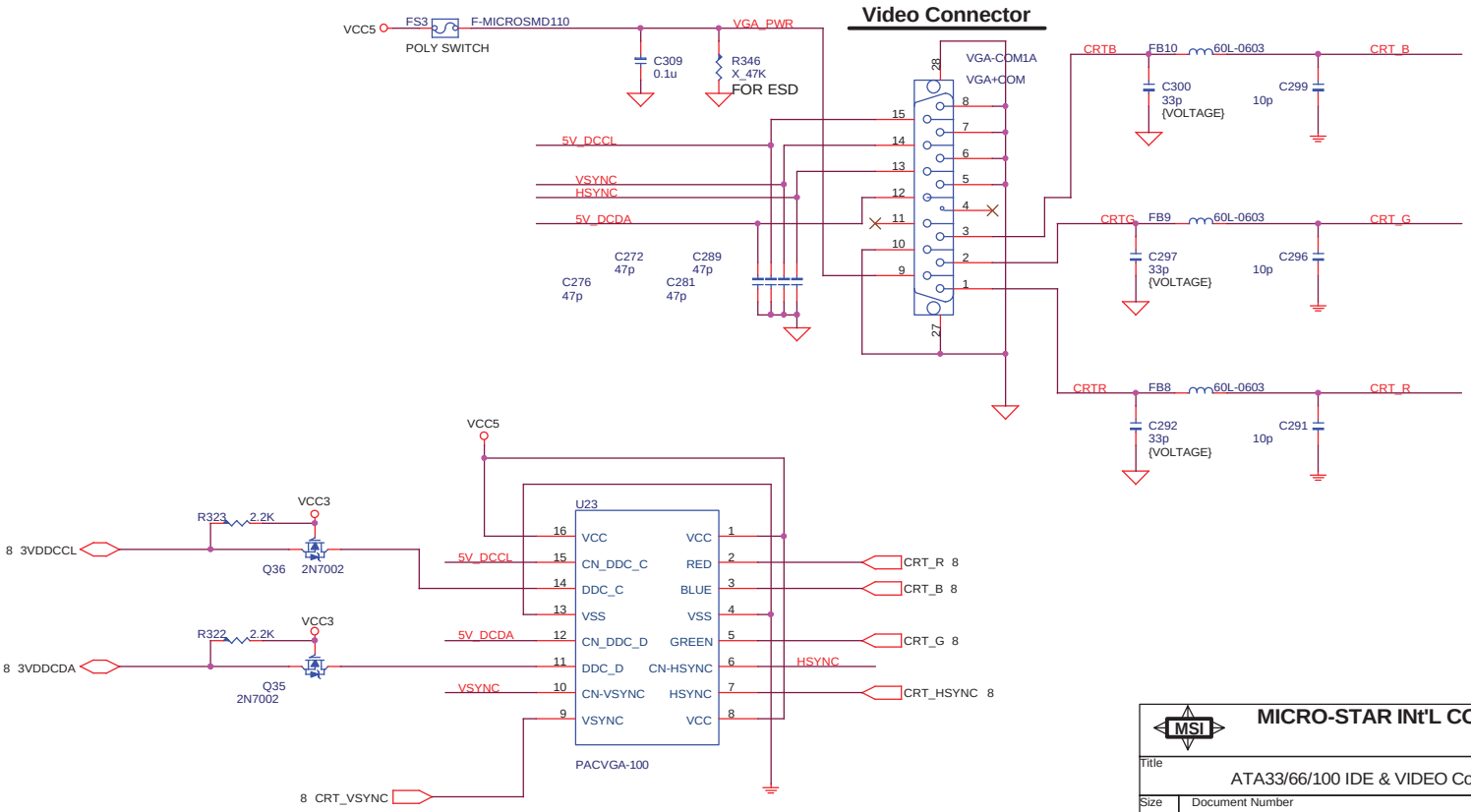

MICRO-STAR INt'L CO., LTD.

Title	ATA33/66/100 IDE & VIDEO Connectors
Size	Document Number: MS-6797
Rev	10
Date:	Monday, October 27, 2003
Sheet	18 of 30

PCI SLOT 1 (PCI VER: 2.2 COMPLY)

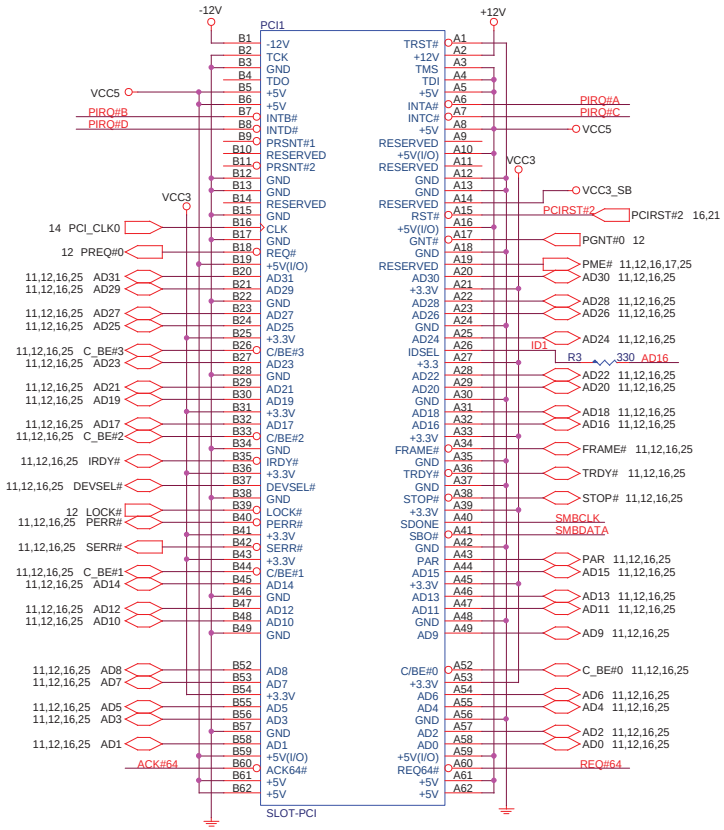

IDSEL = AD16
MASTER = PREQ#0
PIRQ#A

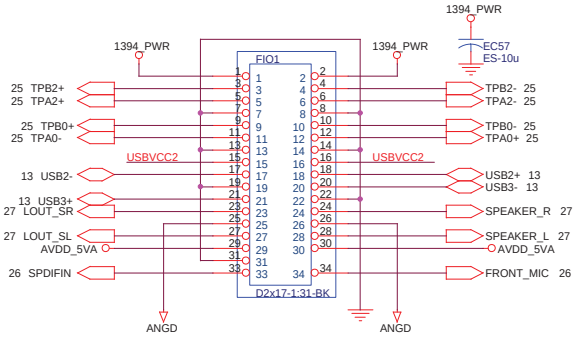

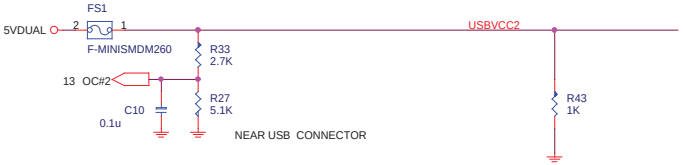

PCI PULL-UP / DOWN RESISTORS

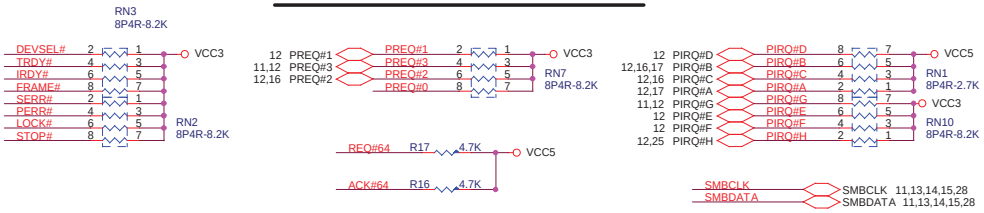

MICRO-STAR INt'L CO., LTD.		
Title	PCI 1& I/O	
Size	Document Number MS-6797	Rev 10
Date: Monday, October 27, 2003	Sheet 19 of 30	

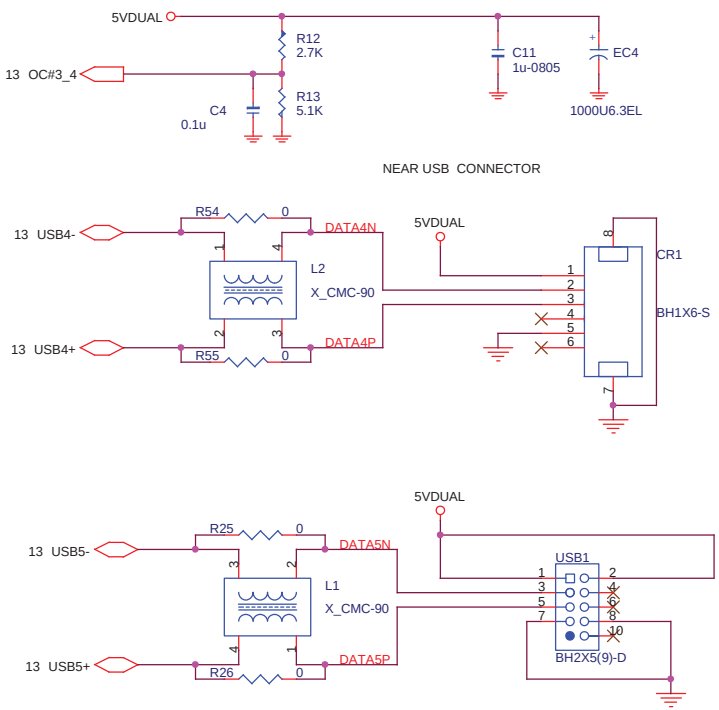

POWER CIRCUIT FOR USB PORT6,7

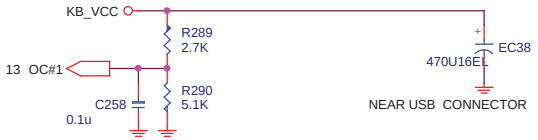

REAR PANEL USB CONNECTOR FOR USB PORT 6,7

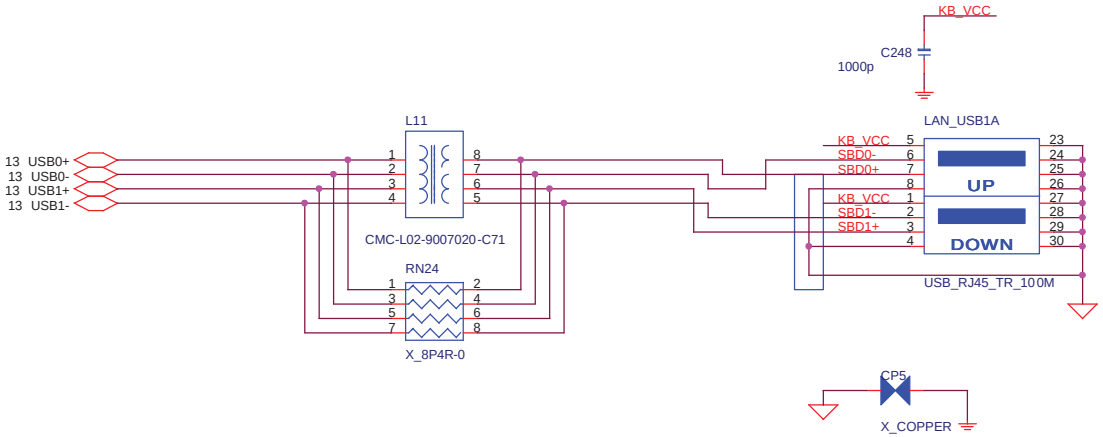

MICRO-STAR INt'L CO., LTD.

Title	USB Connectors	
Size	Document Number MS-6797	Rev 10
Date: Monday, October 27, 2003	Sheet 20 of 30	

ACPI Controller

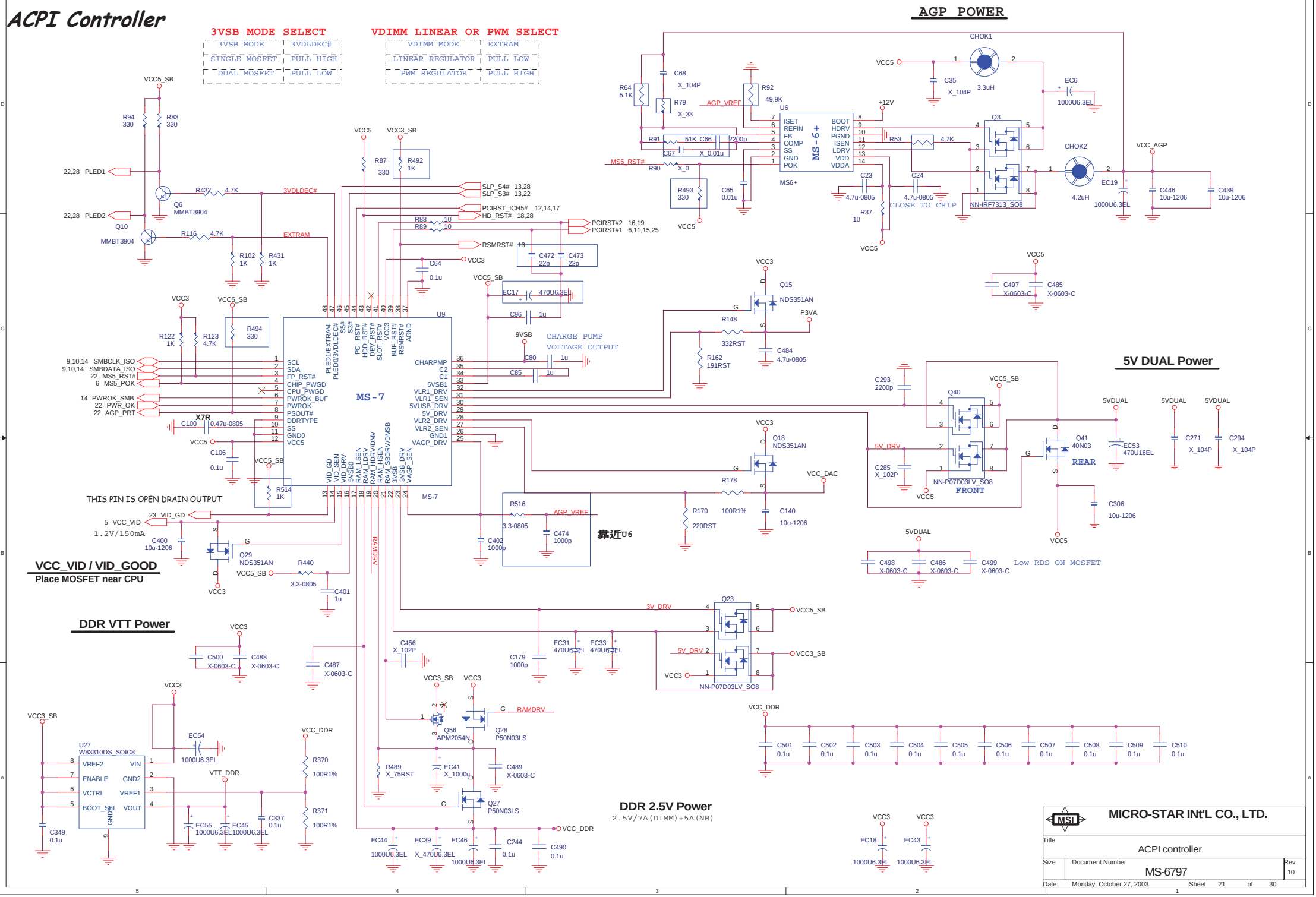

ATX Connector

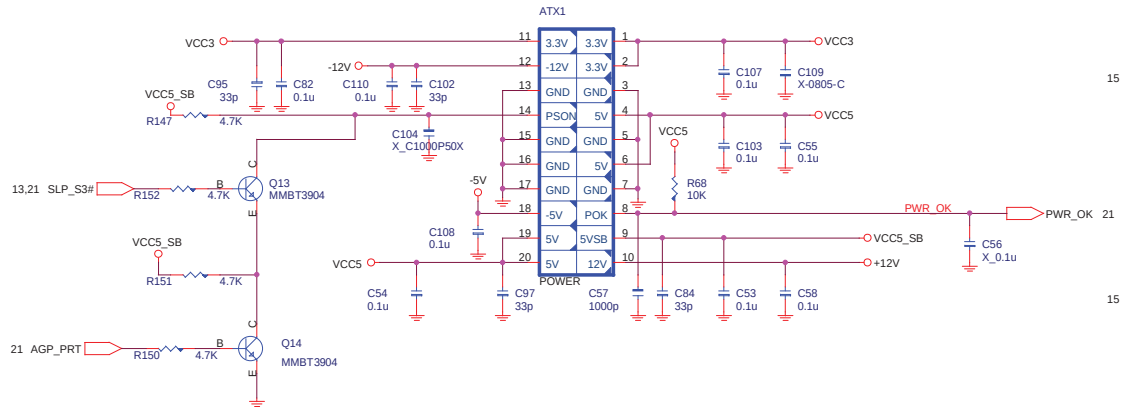

CPU FAN

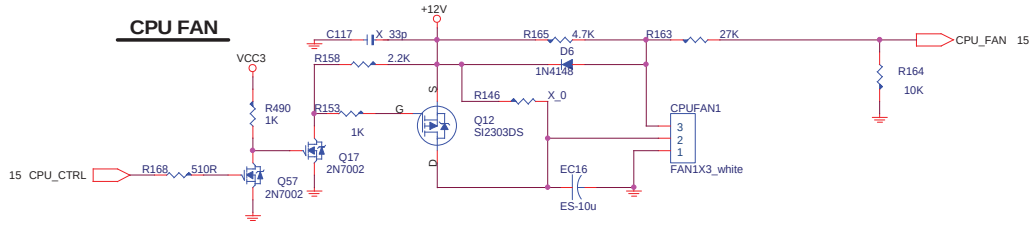

SYSTEM FAN

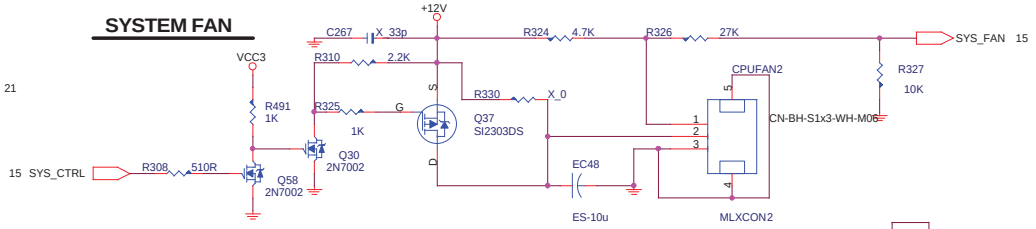

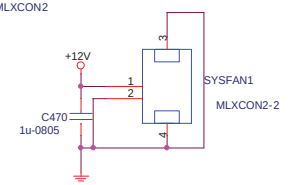

Front Panel Connector

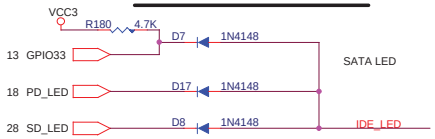

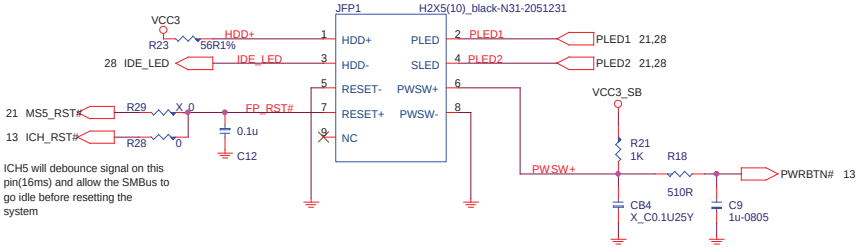

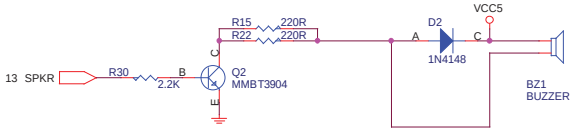

SERIAL ATA CONNECTOR BLOCK

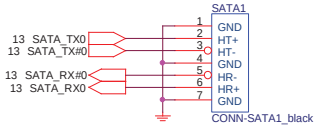

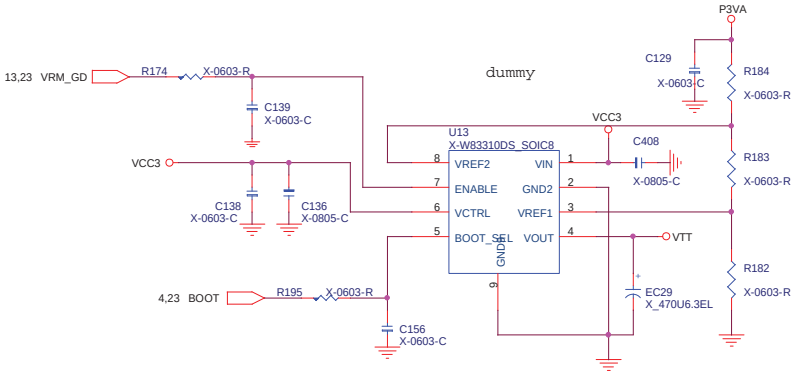

Intel reference GMCH VTT power cirucit

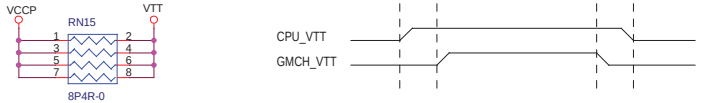

BOOT	BOOT#	CPU	Voltage
LOW	LOW	Northwood	1.45V
HIGH	HIGH	Prescott	1.225V

Icc=2A

NORTHWOOD:1.45V
PRESCOTT:1.2V

MICRO-STAR INt'L CO., LTD.

Title	Front Panel/Fan/VTT
Size	
Document Number	MS-6797
Rev	10
Date:	Monday, October 27, 2003
Sheet	22 of 30

VID Pull-Up Resistor

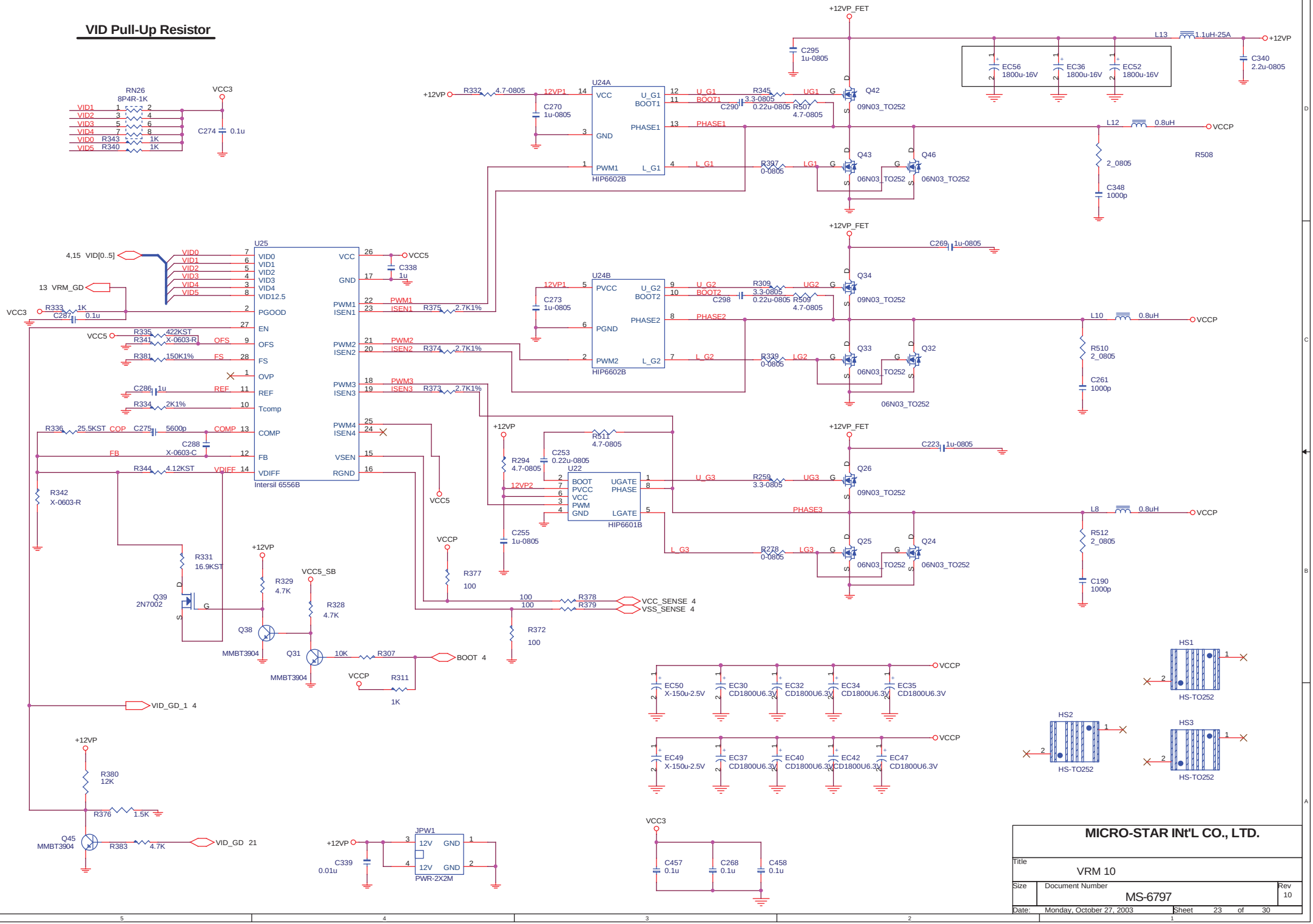

MICRO-STAR INt'L CO., LTD.		
Title: VRM 10		
Size	Document Number: MS-6797	Rev 10
Date: Monday, October 27, 2003	Sheet 23 of 30	

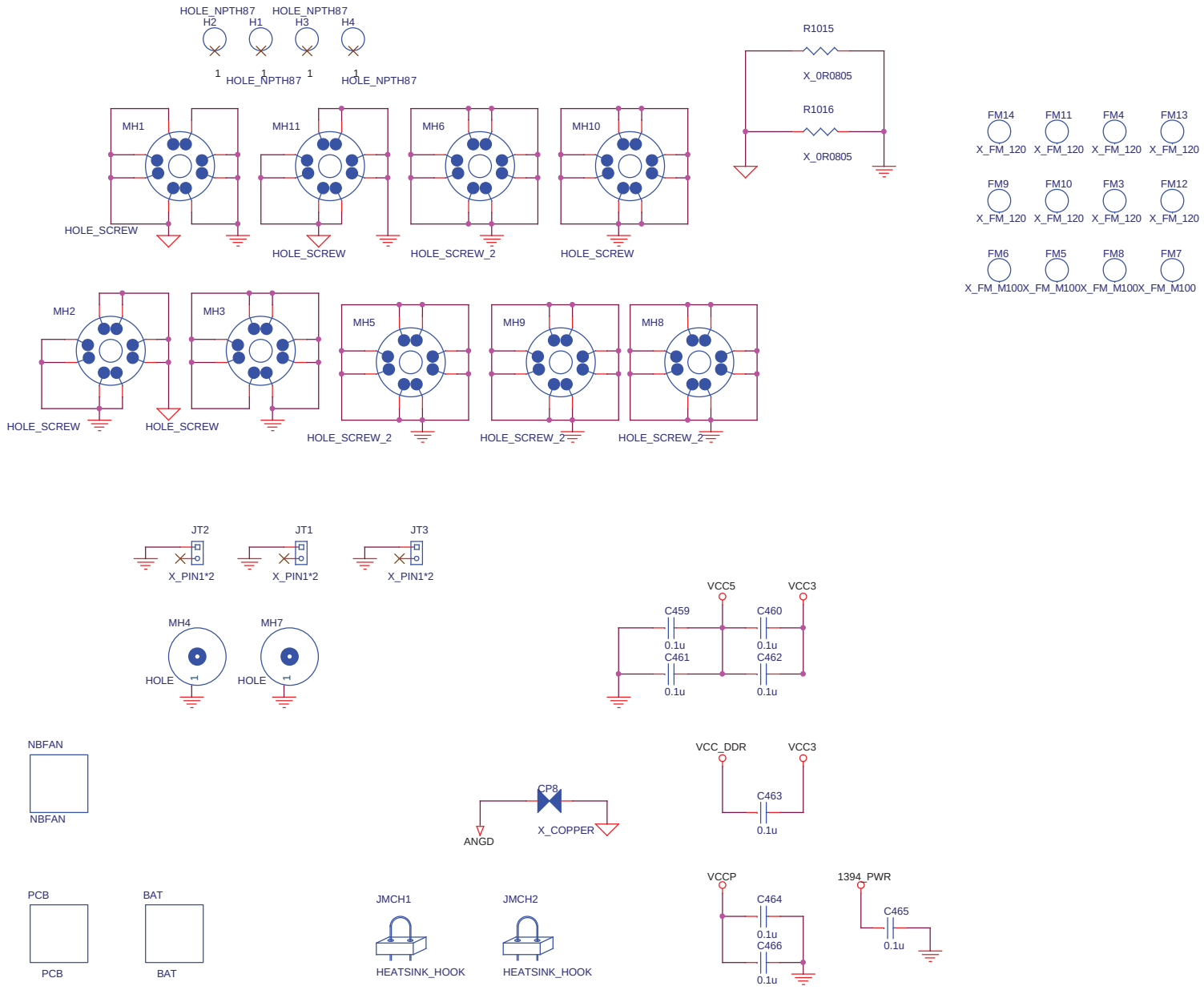

MICRO-STAR INt'L CO., LTD.

Title	Others	
Size	Document Number: MS-6797	Rev 10
Date: Monday, October 27, 2003	Sheet 24 of 30	

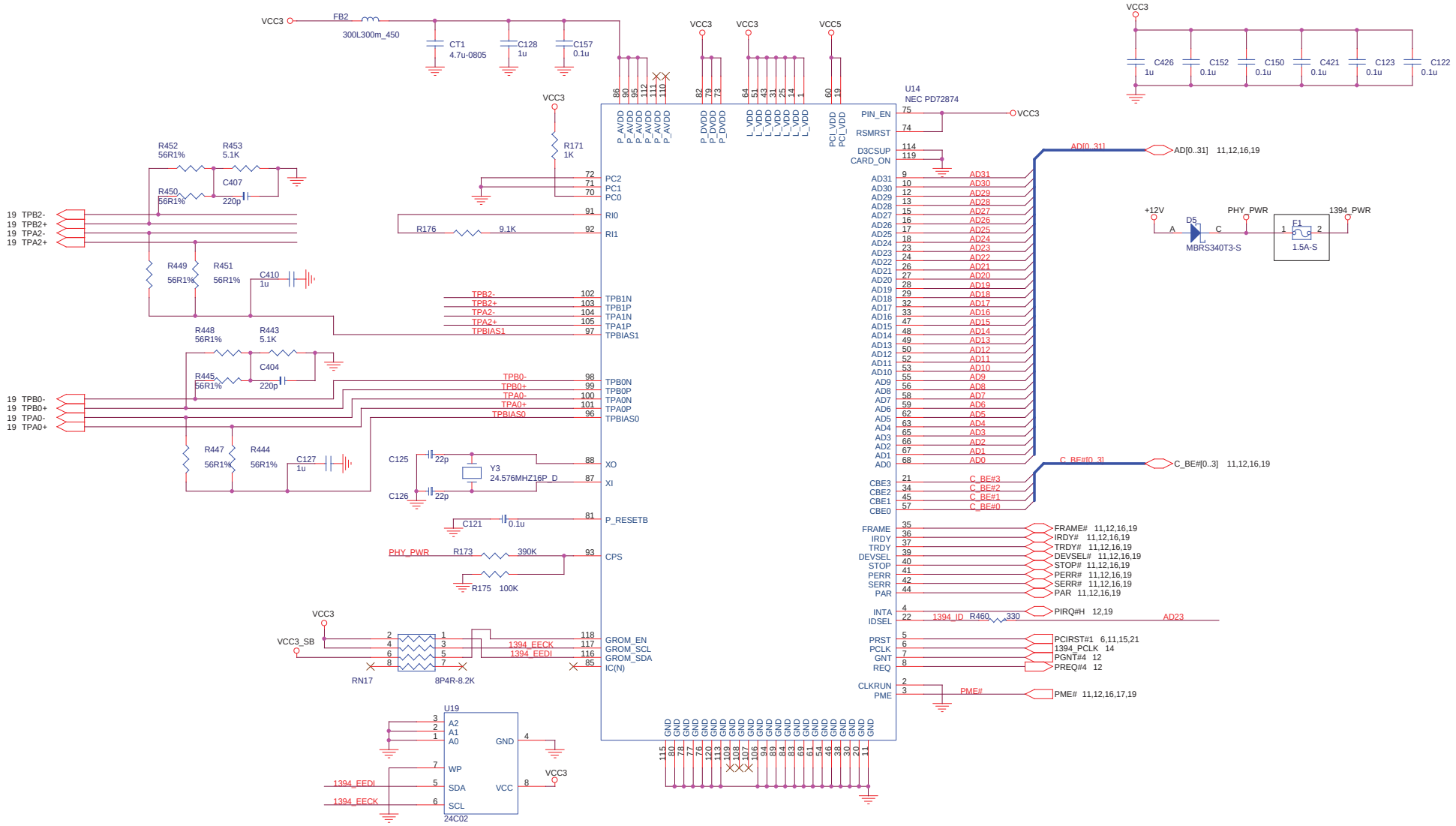

MICRO-STAR INt'L CO., LTD.

Title	IEEE 1394	
Size	Document Number MS6797	Rev 0A
Date: Monday, October 27, 2003	Sheet 25 of 30	

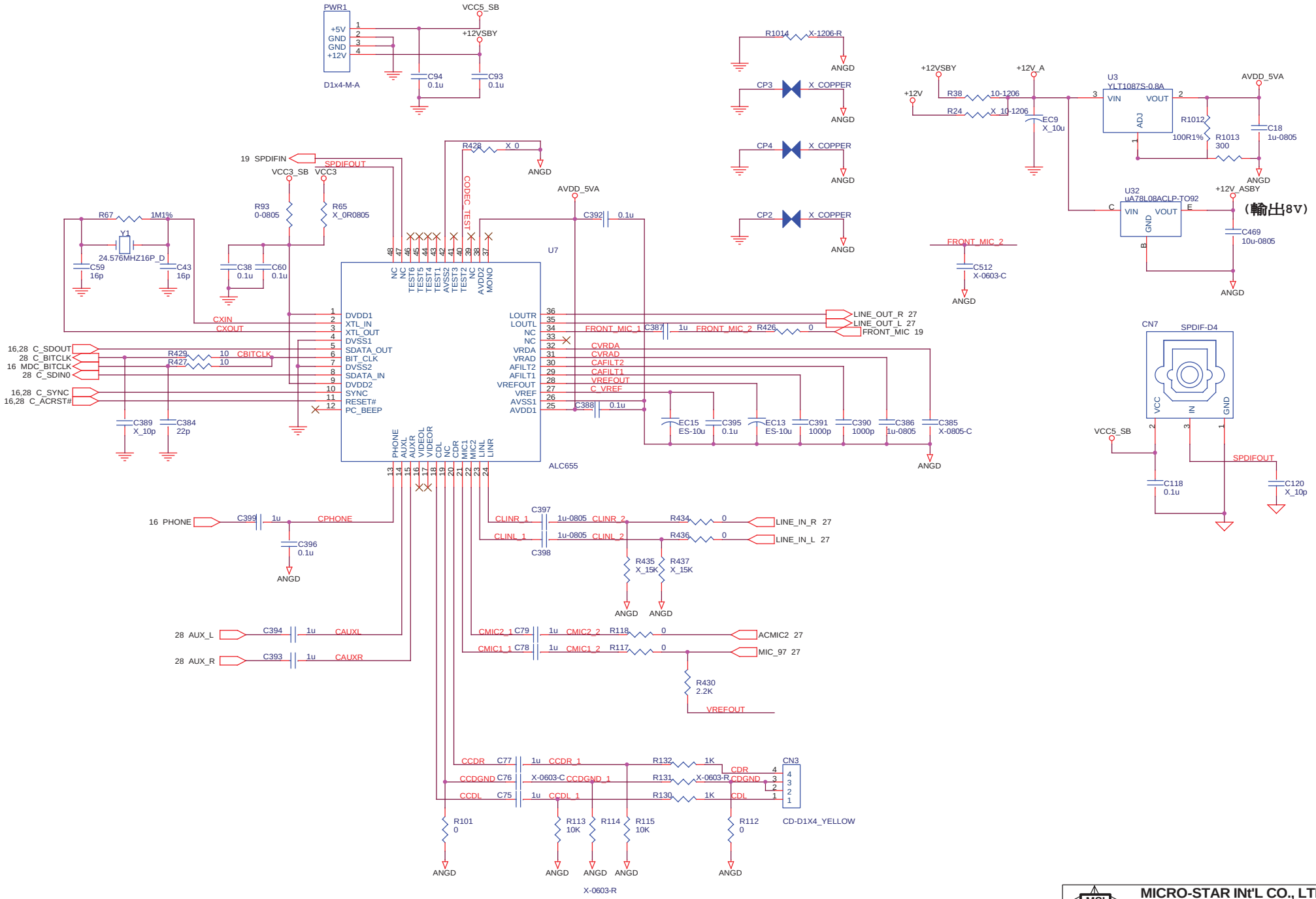

MICRO-STAR INt'L CO., LTD.

Title	AUDIO CODEC	
Size	Document Number MS-6797	Rev 10
Date: Monday, October 27, 2003	Sheet 26 of 30	

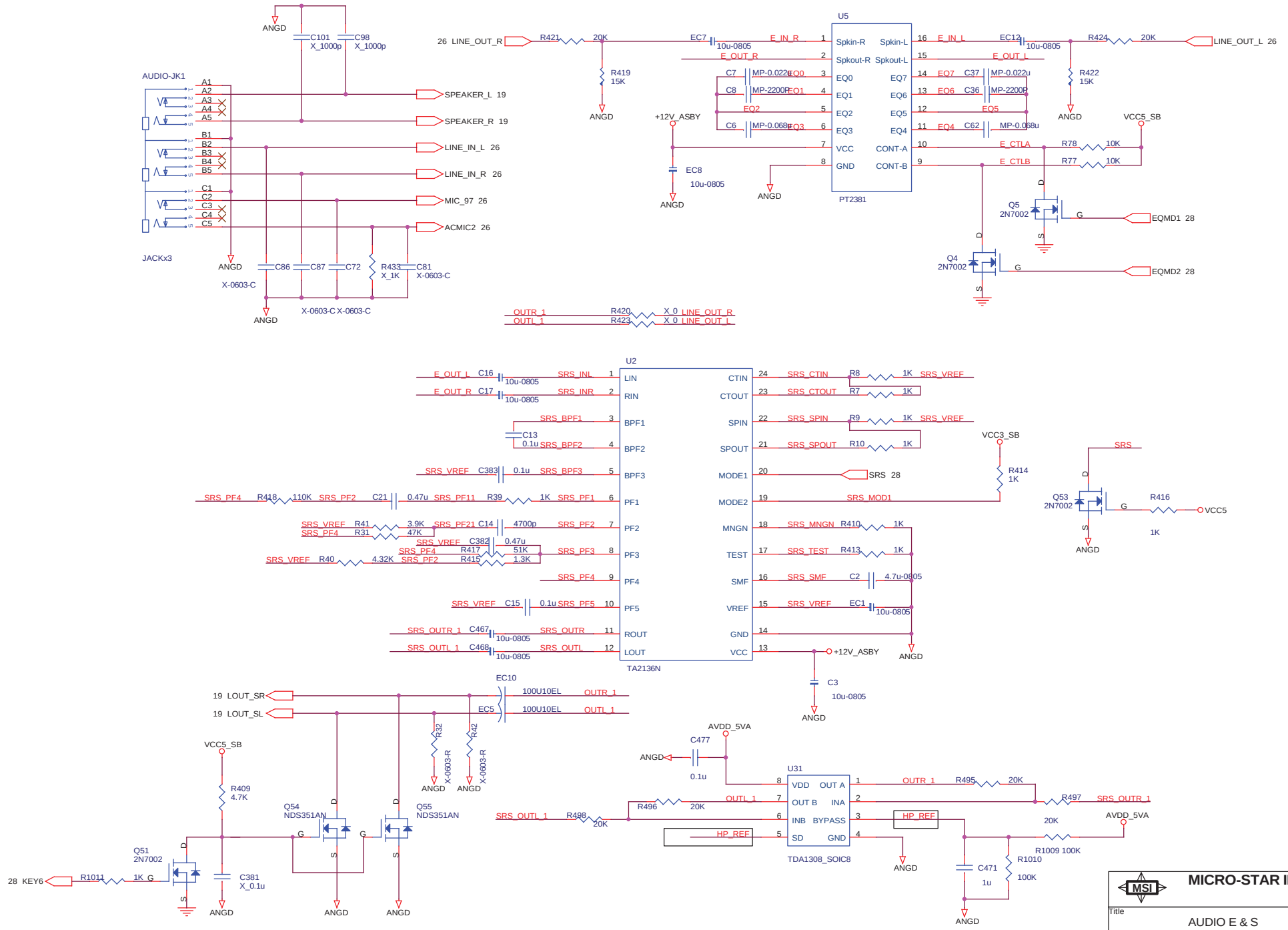

MICRO-STAR INt'L CO., LTD.

Title: AUDIO E & S

Size | Document Number: MS-6797 | Rev: 10

Date: Monday, October 27, 2003 | Sheet 27 of 30

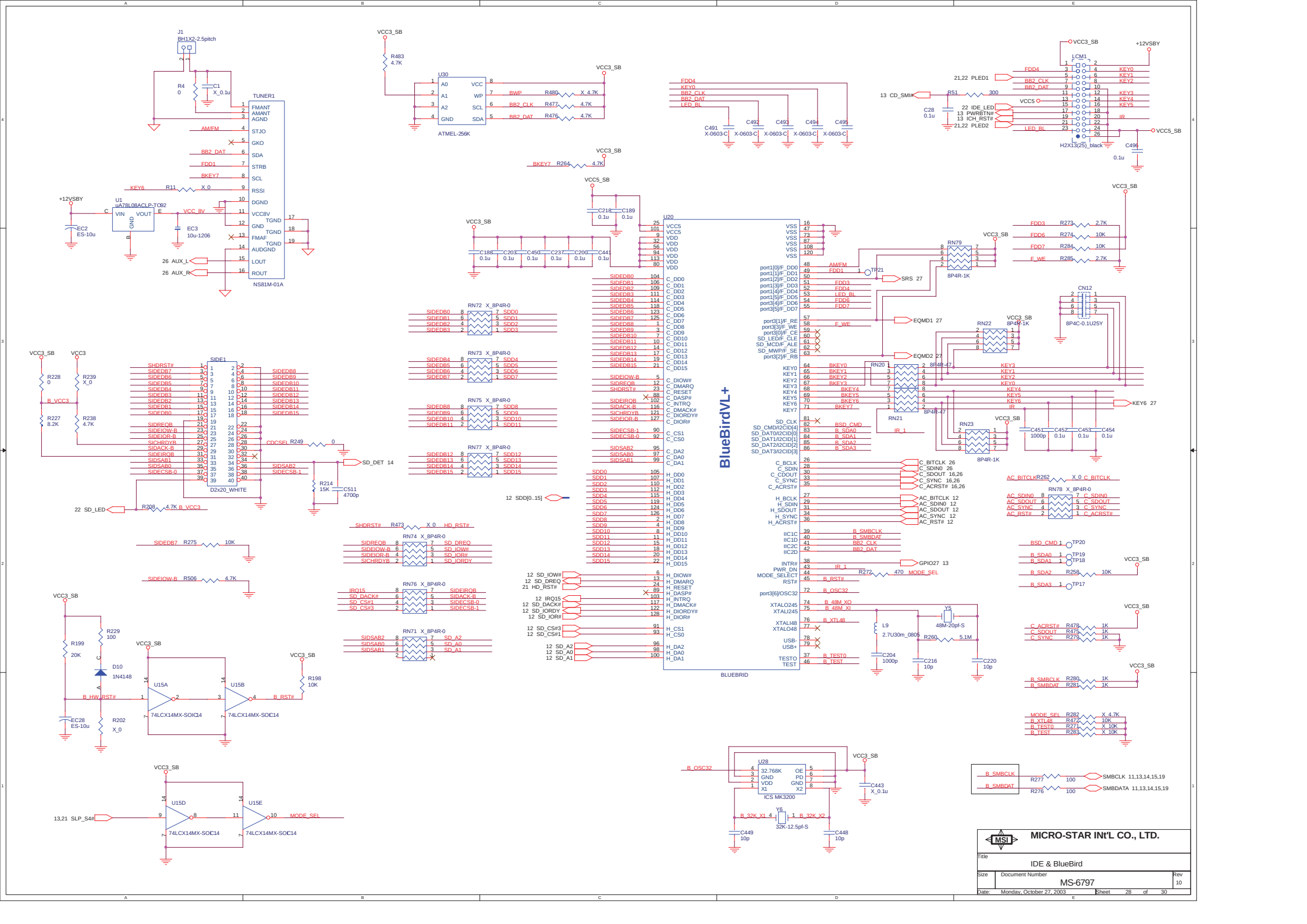
J1
BH1X2-2.5pitch
TUNER1
NS81M-01A
U1
uA78L08ACLP-TO92
+12VSBY
VCC3_SB
VCC5_SB
U30
ATMEL-256K
LCM1
H2X13(25)_black
U20
BlueBirdVL+
BLUEBRID
SIDE1
D2x20_WHITE
CN12
8P4C-0.1U25Y
RN72 X_8P4R-0
RN73 X_8P4R-0
RN75 X_8P4R-0
RN77 X_8P4R-0
RN74 X_8P4R-0
RN76 X_8P4R-0
RN71 X_8P4R-0
RN78 X_8P4R-0
RN79
8P4R-1K
RN22
RN20
8P4R-47
RN21
RN23
U15A
U15B
U15D
U15E
74LCX14MX-SOIC14
U28
32.768K
ICS MK3200
Y6
32K-12.5pf-S
Y5
48M-20pf-S
L9
2.7U30m_0805
MICRO-STAR INt'L CO., LTD.
Title
IDE & BlueBird
Size
Document Number
MS-6797
Rev
10
Date: Monday, October 27, 2003
Sheet 28 of 30

Page25 change 1394 device to 0A version

Title	History
Size A	Document Number MS6797
Rev	10
Date:	Monday, October 27, 2003
Sheet	29 of 30

Title	{Title}
Size A	Document Number {Doc}
Rev	{RevCode}
Date:	Monday, October 27, 2003
Sheet	30 of 30