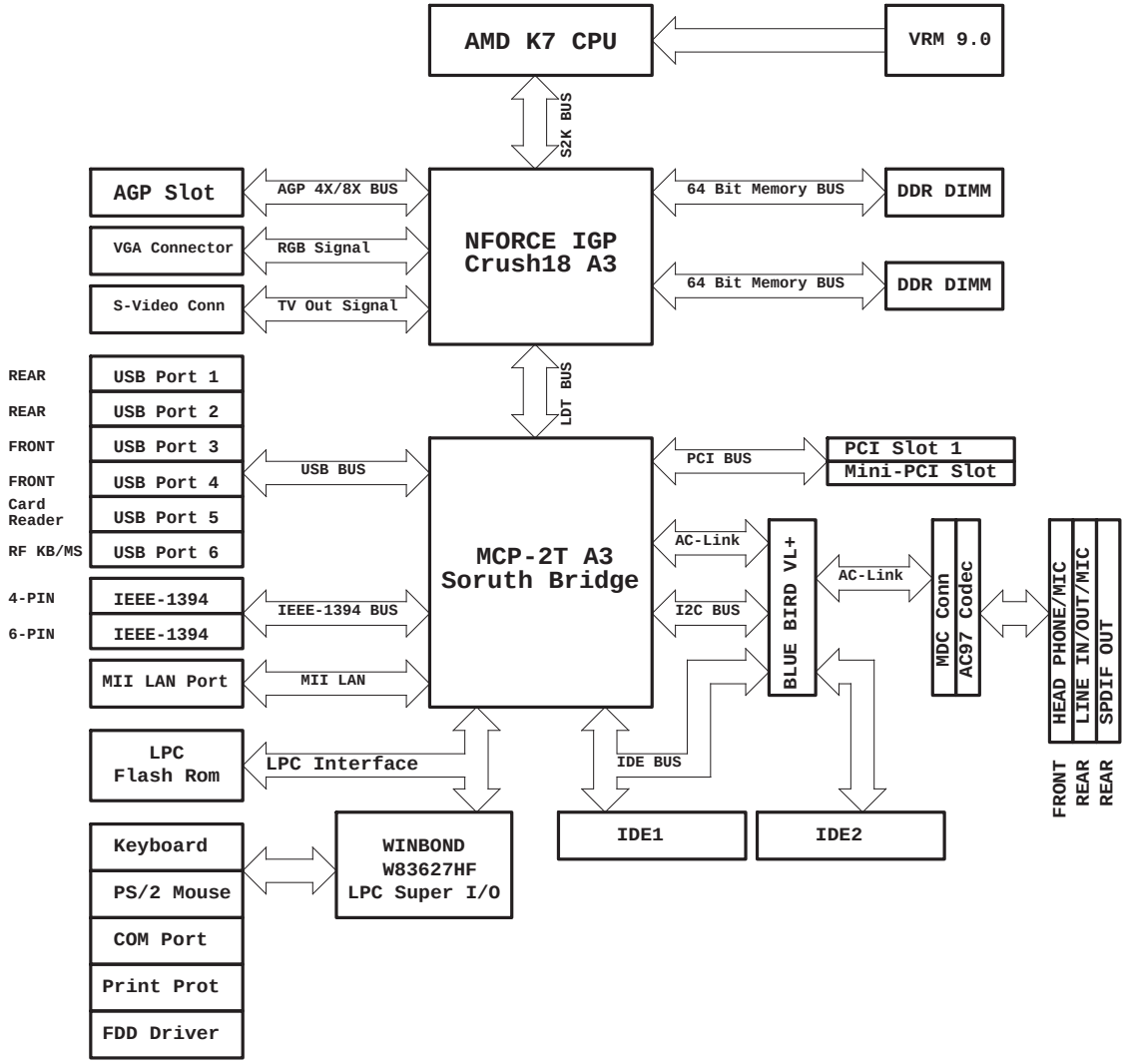

Gerber Out Version

MS-6796 Version: 10

001-Block Diagram 1
002-Power and Specification
003-K7 CPU Part 1
004-K7 CPU Part 2
005-VRM 9.0
006-Crush18G Part 1
007-Crush18G Part 2
008-Crush18G Part 3
009-Dual VGA & S-Video Connector
010-AGP Slot
011-DDR DIMM1 & 2
012-DDR Terminator Resistor
013-MCP/2T Part 1
014-MCP/2T Part 2
015-MCP/2T Part 3
016-N/A
017-MDC Conn & BIOS
018-MII LAN & USB Connector
019-IEEE 1394 PHY
020-N/A
021-PCI Slot1 & Mini-PCI
022-N/A
023-N/A
024-N/A
025-IDE Connector
026-SMSC LPC47M292
027-LPT & FDD & KBM
028-MS5 ACPI Controller
029-Front Panel & ATX Power
030-Block Diagram 2
031-BlueBird & LCM Conn
032-AC'97 Codec
033-Audio IC & Connector
034-Tuner & Front I/O
035-Decoupling Capacitor
036-MS-6796 History

Title	Block Diagram 1	
Size Custom	Document Number MS-6796	Rev 0A
Date: Tuesday, July 22, 2003	Sheet 1 of 36	

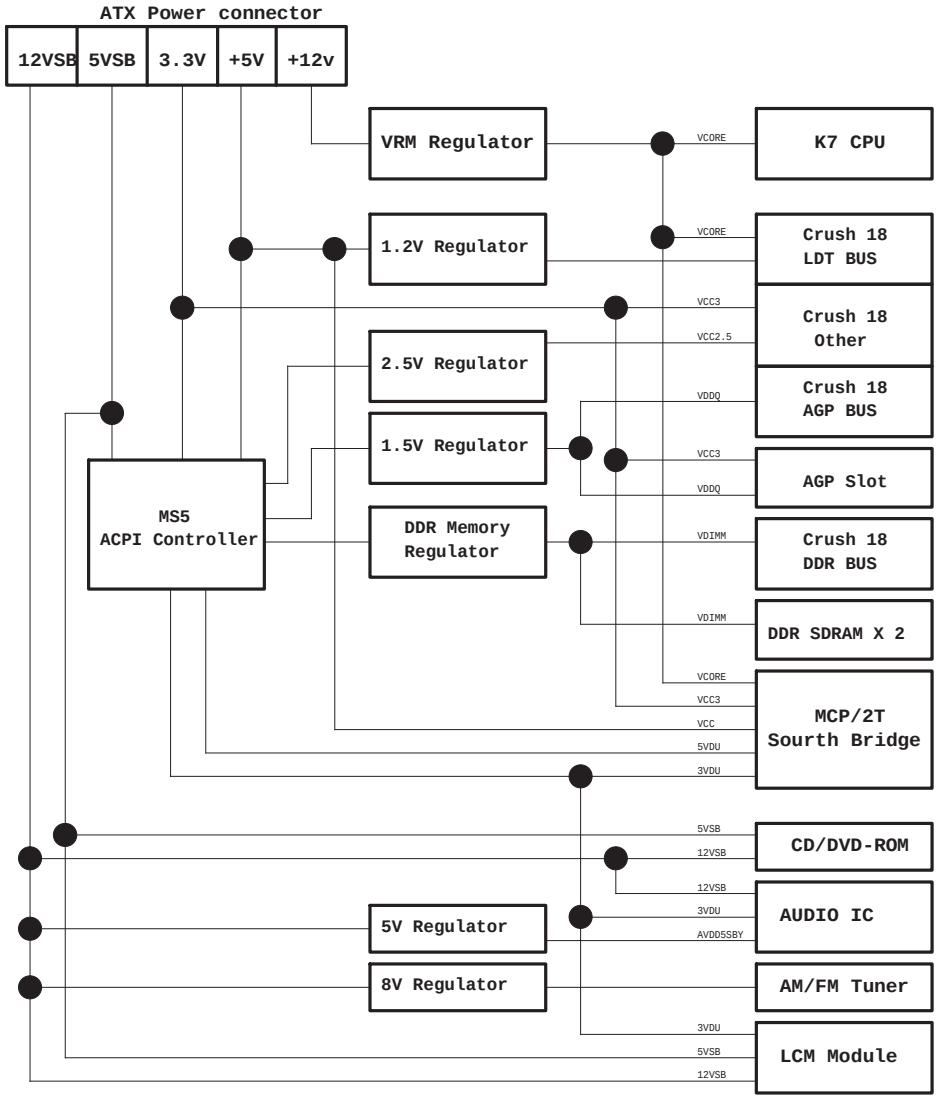

MS-6796 Specification

CPU: AMD K7 Serial Socket 462

North Bridge: Nvedia Crush 18G A3

Sorth Bridge: Nvedia MCP/2T A3

On Board Device: IEEE1394 PHY

On Board Device: ICS MII LAN

On Board DDR SDRAM: X2

On Board AGP Slot: X1

On Board PCI Slot: X2

On Board MDC Conn: X1

On Board Device: LCM/Blue Bird Module

On Board Device: ALC650

On Board Device: SRS/EQ IC

GPIO and PCI BUS Address

Title: Power and specification		
Size	Document Number MS-6796	Rev 0A
Date: Tuesday, July 22, 2003	Sheet 2 of 36	

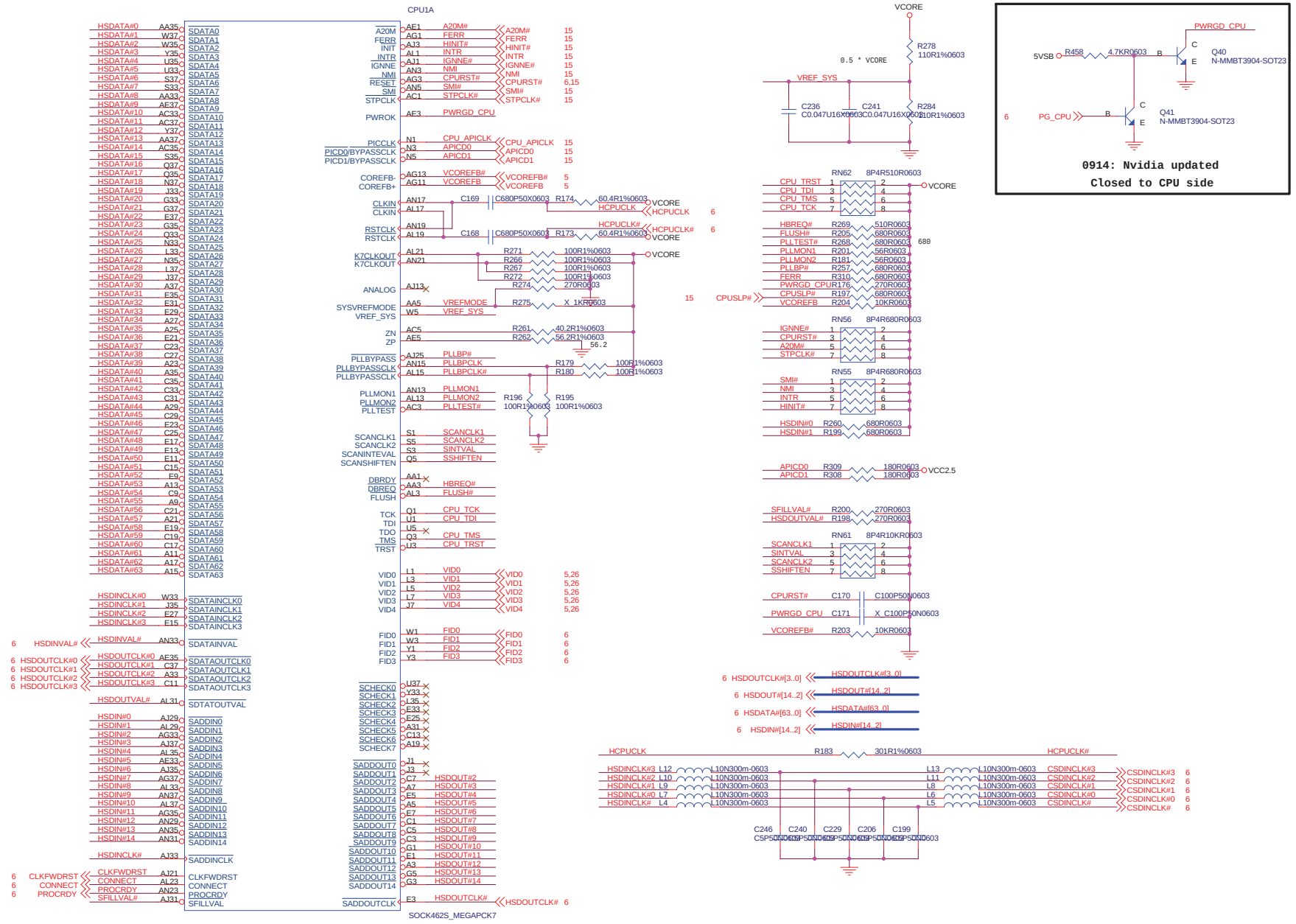

Title

K7 CPU Part 1

Size	Document Number	Rev
	MS-6796	0A

Date: Wednesday, July 23, 2003 Sheet 3 of 36

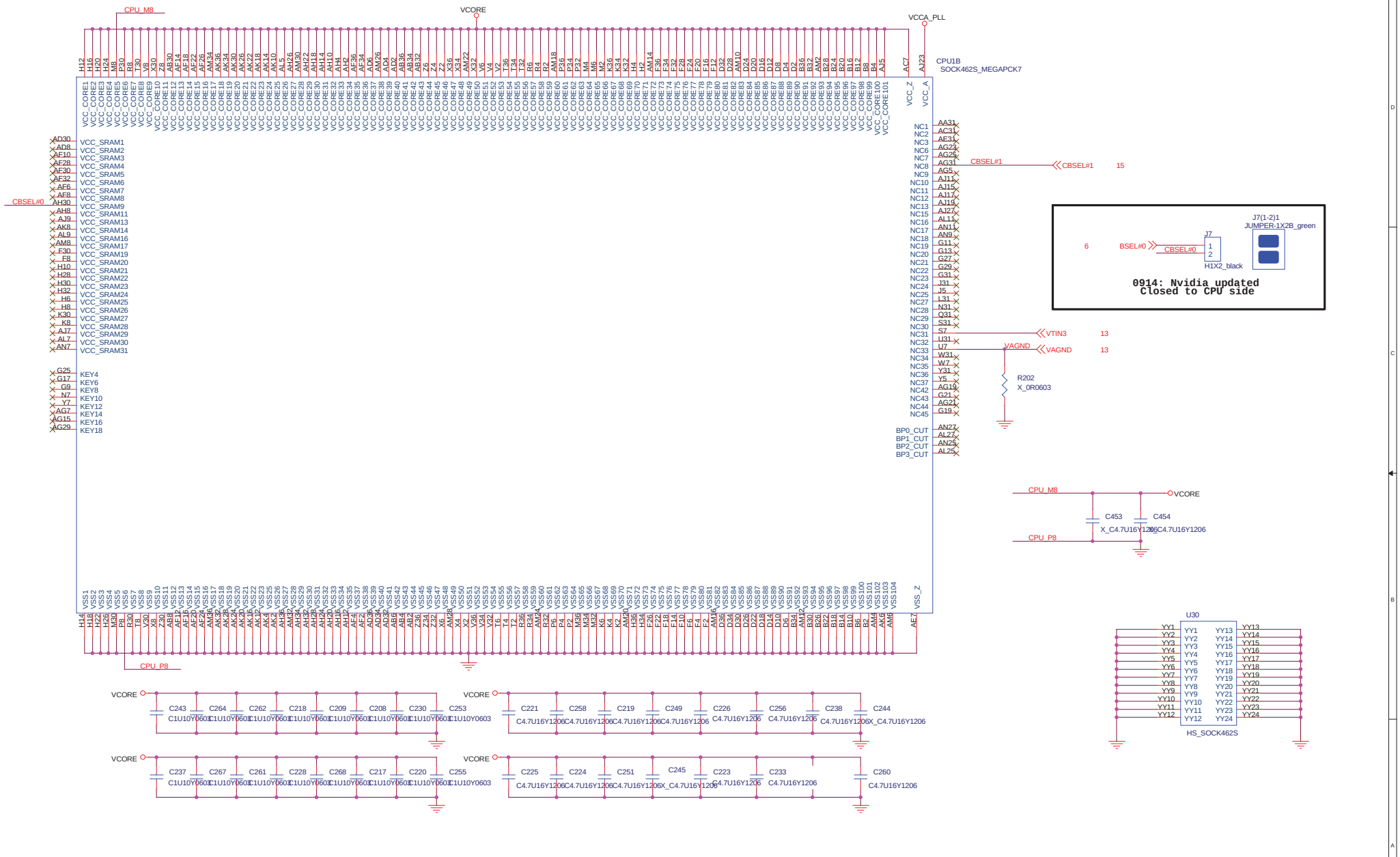

Title

K7 CPU Part 2

Size	Document Number	Rev
	MS-6796	0A

Date: Wednesday, July 23, 2003 Sheet 4 of 36

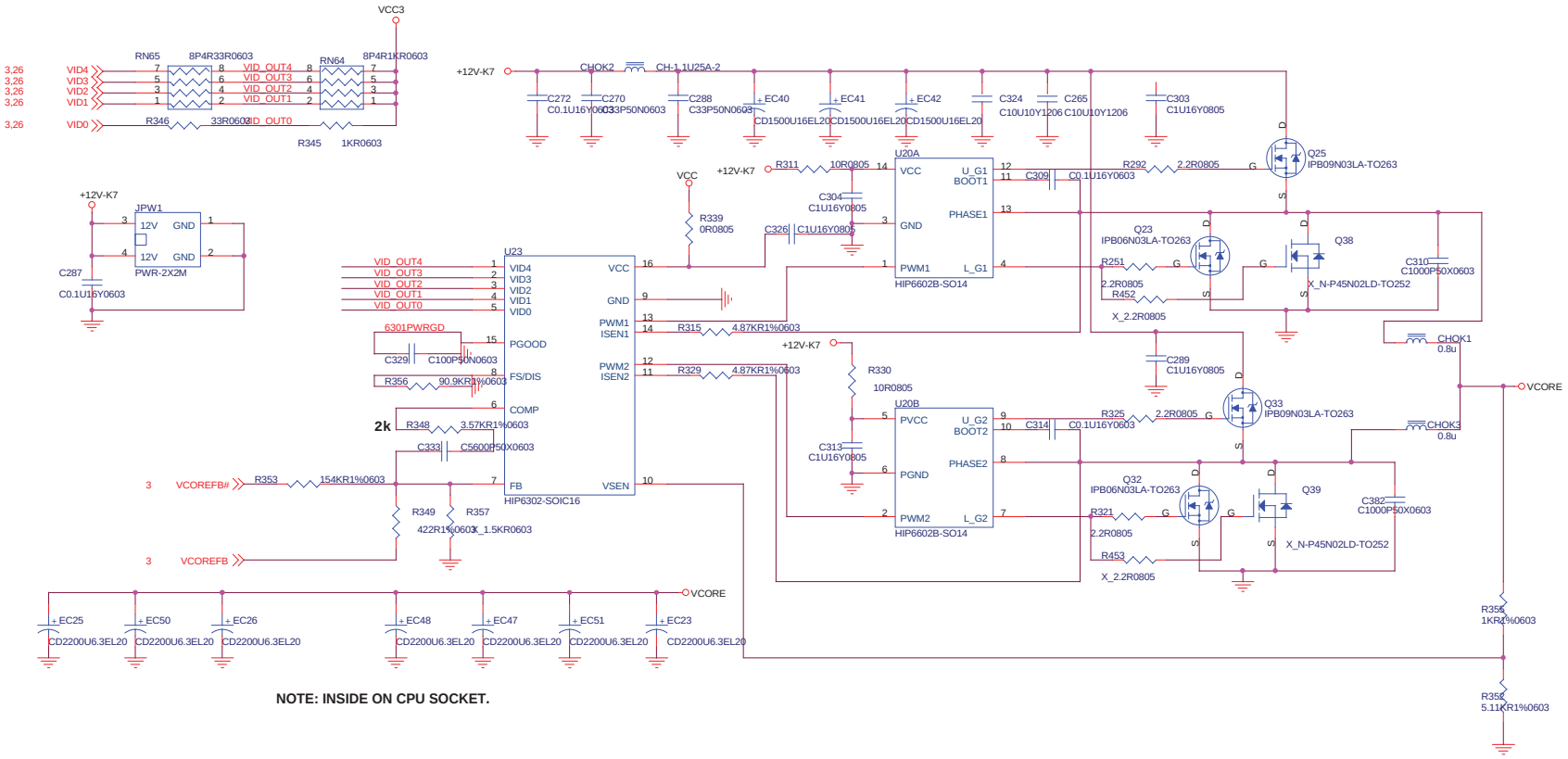

NOTE: INSIDE ON CPU SOCKET.

VID4	VID3	VID2	VID1	VID0	VDC(V)
1	0	1	1	0	1.30
1	0	0	0	1	1.425
1	0	0	0	0	1.45
0	1	1	1	1	1.475
0	1	1	1	0	1.500
0	1	1	0	1	1.525
0	1	1	0	0	1.550
0	1	0	1	1	1.575
0	1	0	1	0	1.600
0	1	0	0	1	1.625

VID4	VID3	VID2	VID1	VID0	VDC(V)
0	1	0	0	0	1.650
0	0	1	1	1	1.675
0	0	1	1	0	1.70
0	0	1	0	1	1.725
0	0	1	0	0	1.75
0	0	0	1	1	1.775
0	0	0	1	0	1.80
0	0	0	0	1	1.825
0	0	0	0	0	1.85
1	1	1	1	1	OFF

FDB6670 Specification:
Qg= 35nC; Trise= 15ns; Tfall= 42ns

Hi-Side MOSFET:

Switching loss=
1/2*Io*Vin*(Trise+Tfall)*Fs
1/2*22.5*5*(15ns+42ns)*200K
P_switching loss= 0.64W

Conduction loss= $Io^2*Rds(on)*D$

=(22.5*22.5)*0.0065*0.33= 1.1W
P(total)= P_switching loss + P_conduction loss
= 0.64W + 1.1W= 1.74W

Low-Side MOSFET:

P(total)= (22.5*22.5)*0.0065*0.67
= 2.2W

AMD CPU specification:
2GHz CPU: Vcore= 1.65V, P= 74.1W
Vcore_DC= -50mv ~ 50mv
Vcore_AC= -100mv ~ 150mv
I_ripple= $Io\sqrt{D(1-D)}$
D= 1.65/5= 33%; I_ripple= 10.58A
The ripple current for each input
Based on temperature coefficient of Rubycon:

漣波電流	溫度係數	溫度
2.55A	1	105
4.3A	1.7	85
5.4A	2.1	under 65

Total 4 pcs input capacitance= 17.2A @85

ESR= Vo(delta)/Io(delta)
ESR= 100mv/45= 2.22m_ohm
ESR for each capacitance is 13m_ohm
Total 10 pcs capacitance are 1.3 m_ohm
1.3 m_ohm <2.2 m_ohm, so it OK !

Rubycon 2200uF/6.3V capacitor

Rated voltage: 6.3V
Surge voltage: 8V
Leakage current: 415uA/2min
DF= 0.24@120Hz
Ripple current= 2.55A(max)
Vender guaranteed: 3000 Hr/105 digree.C
Actual operating temperature: 55 digree.C @45A
Ambient temperature: 25 digree.C
實際壽命= L1*2^[(T1-Ta)/10]*2^[(Ta-T2)/K]
K= 10, if ripple current within specification
K= 5, if ripple current over specification
實際壽命= L1*2^[(T1-T2)/10]
實際壽命= 3000*2^[(105-55)/10]
實際壽命= 96000 Hr

Ripple current of Vender's design:

$$Iac=\sqrt{\frac{Delta(T)*B*A*WC}{tanG}}$$

Delta(T): 溫升 ; A= 0.785*{[D(D+4L)]/10}
B: 散熱係數 ; WC= 6.28*f*C
D: 電容外徑 ; L: 電容長度
tanG= R/Xc ;
DF(電容損失角)= tanG*100%

Title	VRM 9.0		
Size	Document Number MS-6796		Rev 0A
Date: Wednesday, July 23, 2003		Sheet 5 of 36	

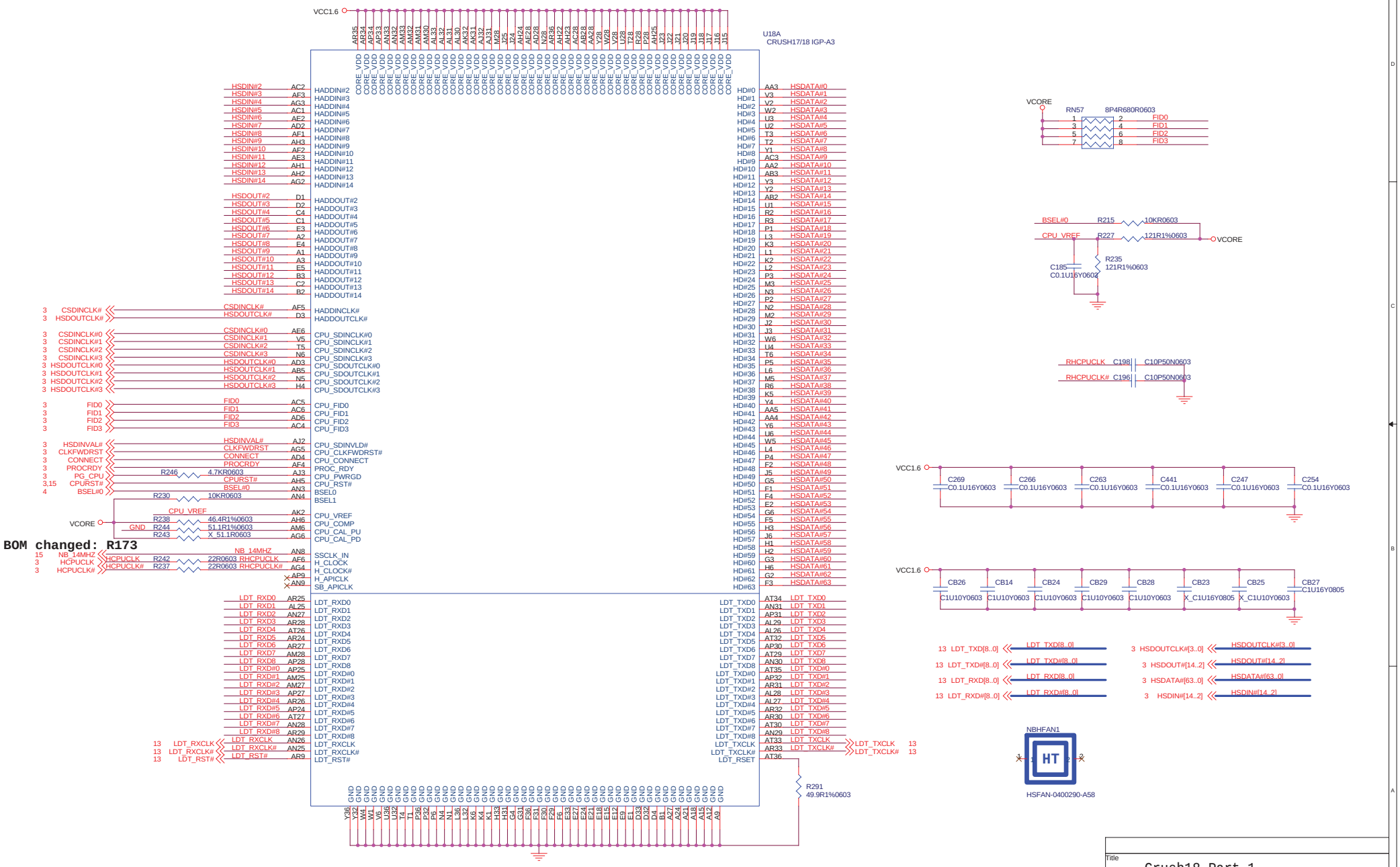

Title
Crush18 Part 1

Size	Document Number	Rev
	MS-6796	0A

Date: Wednesday, July 23, 2003 Sheet 6 of 36

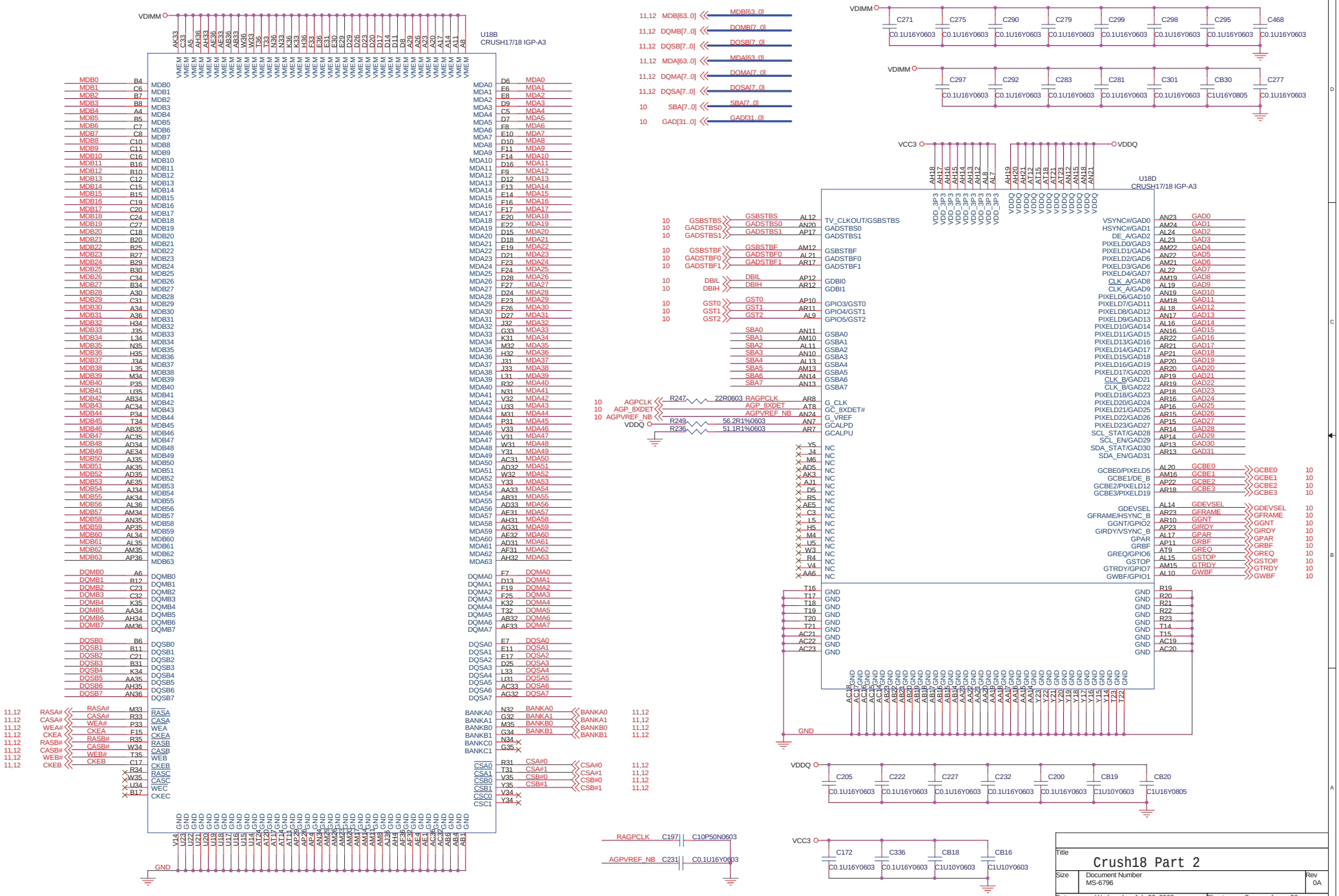
U18B
CRUSH17/18 IGP-A3
U18D
CRUSH17/18 IGP-A3
VDIMM
VDDQ
VCC3
MDB[63..0]
DQMB[7..0]
DQSB[7..0]
MDA[63..0]
DQMA[7..0]
DQSA[7..0]
SBA[7..0]
GAD[31..0]
C271 C275 C290 C279 C299 C298 C295 C468
C297 C292 C283 C281 C301 CB30 C277
C205 C222 C227 C232 C200 CB19 CB20
C172 C336 CB18 CB16
R247 22R0603
R249 56.2R1%0603
R236 51.1R1%0603
RAGPCLK C197 C10P50N0603
AGPVREF_NB C231 C0.1U16Y0603
Title
Crush18 Part 2
Size
Document Number
MS-6796
Rev
0A
Date: Wednesday, July 23, 2003
Sheet 7 of 36

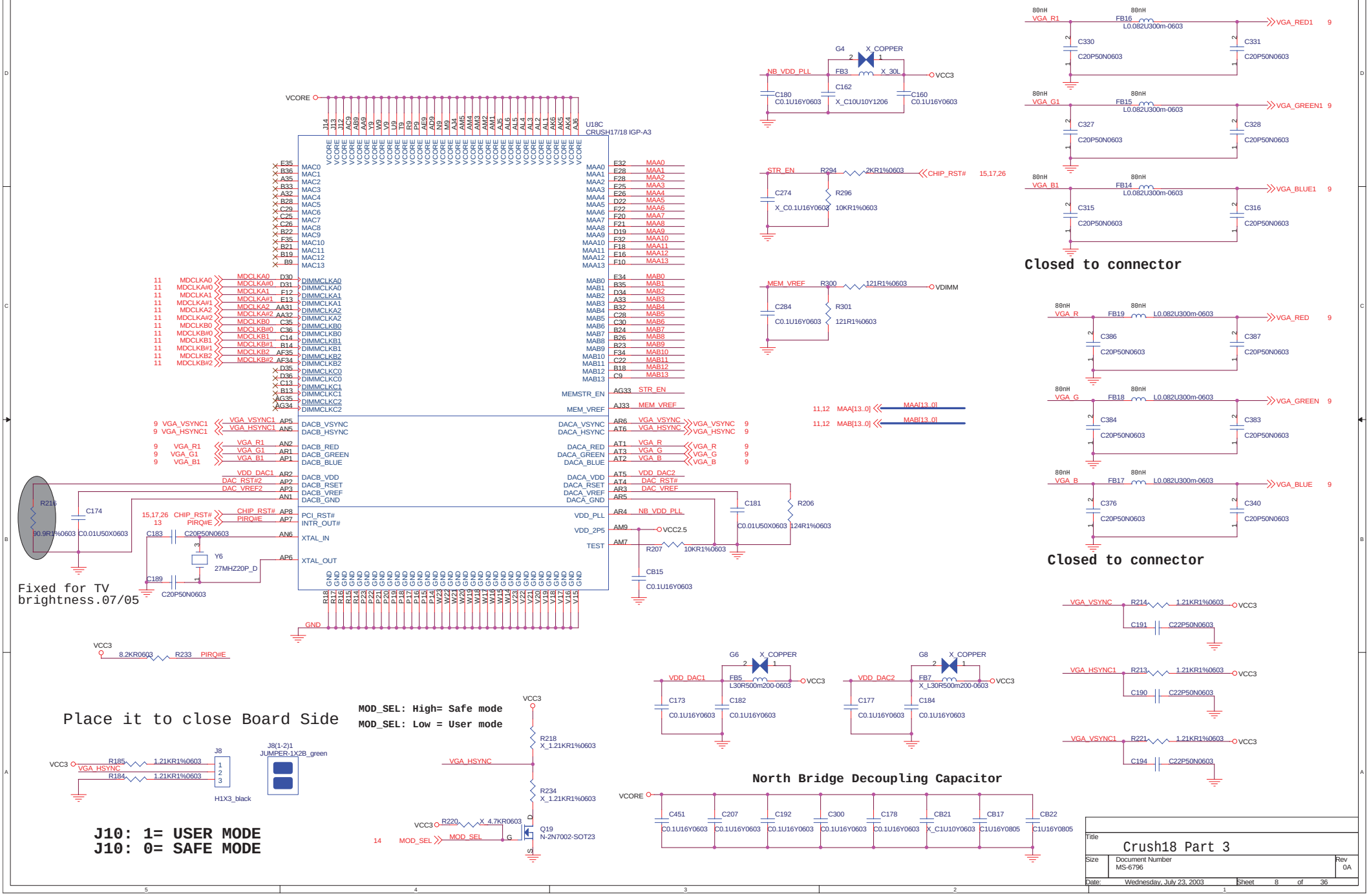
U18C
CRUSH17/18 IGP-A3
VCORE
GND
VCC3
Fixed for TV brightness.07/05
Place it to close Board Side
MOD_SEL: High= Safe mode
MOD_SEL: Low = User mode
J10: 1= USER MODE
J10: 0= SAFE MODE
Closed to connector
Closed to connector
North Bridge Decoupling Capacitor
Title
Crush18 Part 3
Size
Document Number
MS-6796
Rev
0A
Date: Wednesday, July 23, 2003
Sheet 8 of 36

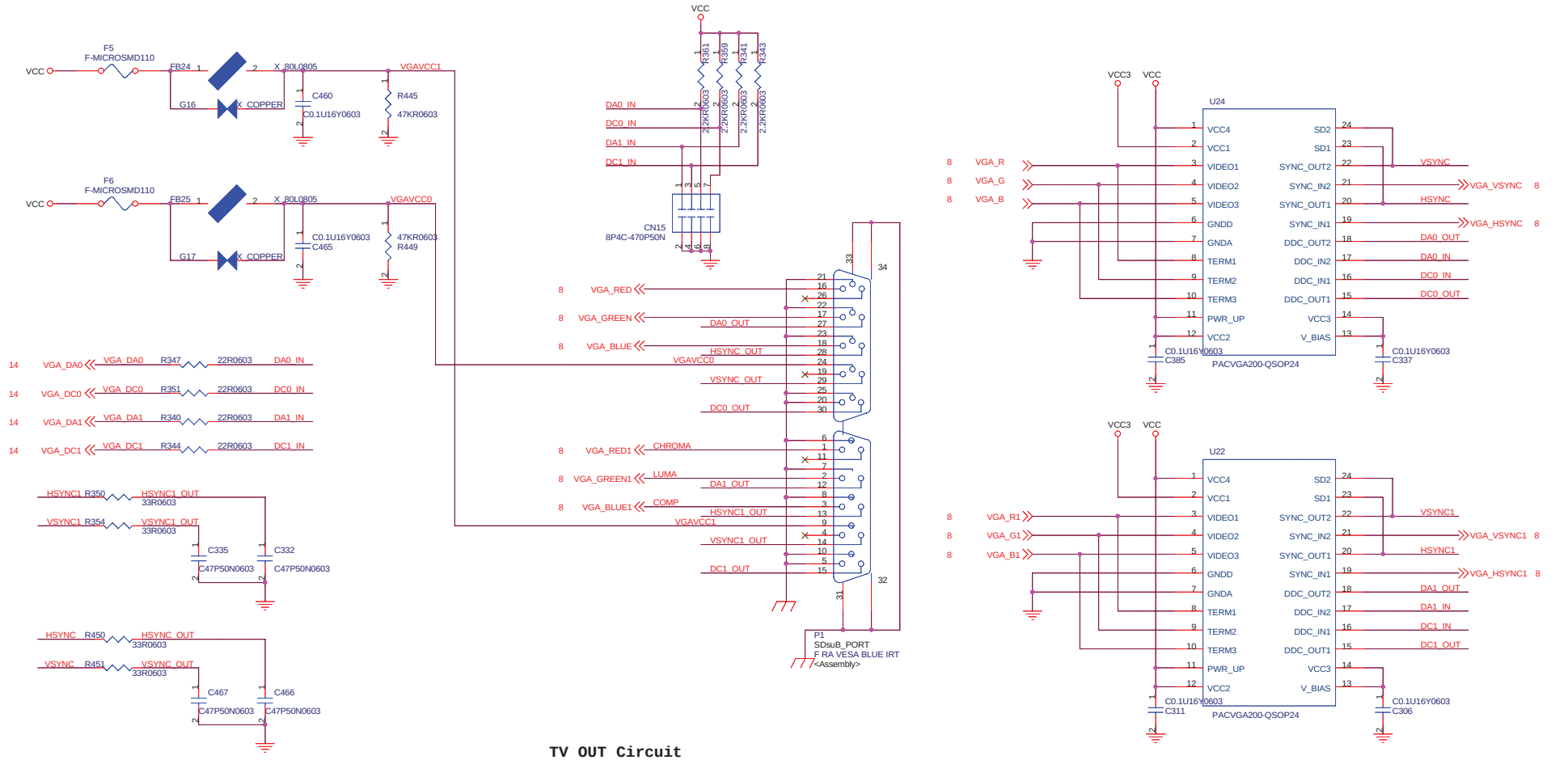

TV OUT Circuit

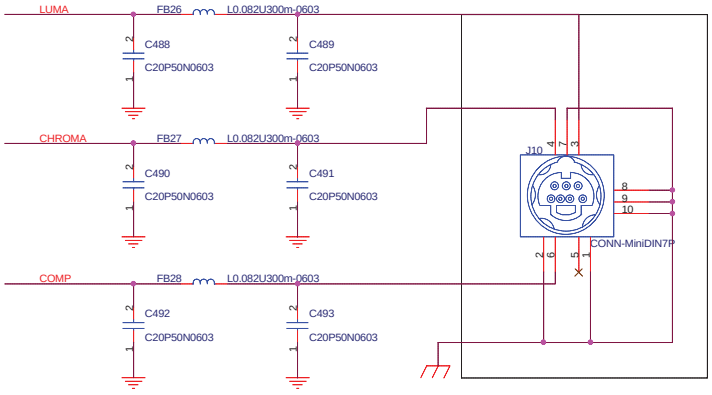

Title <Title>		
Size Custom	Document Number <Doc>	Rev <RevCode>
Date: Wednesday, July 23, 2003	Sheet 9 of 36	

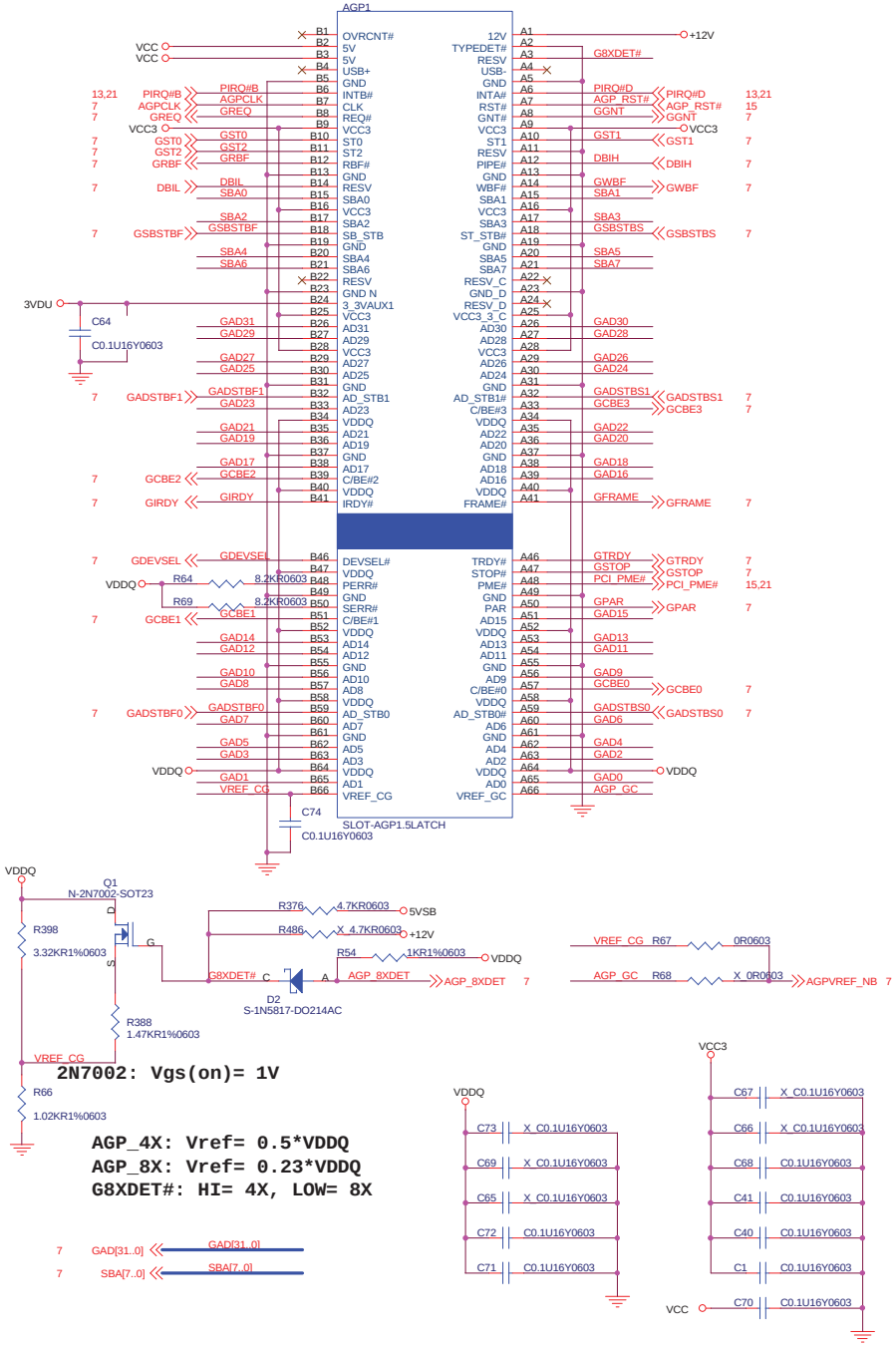

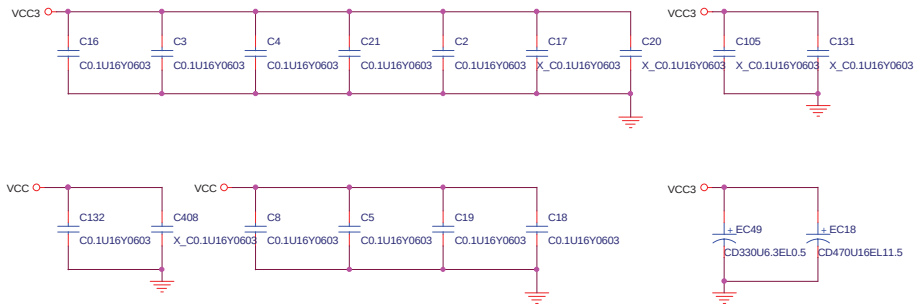

These Capacitance closed to PCI Slot

Title	AGP Slot 1.5V & TV Out
Size	Document Number MS-6796
Rev	0A
Date:	Wednesday, July 23, 2003
Sheet	10 of 36

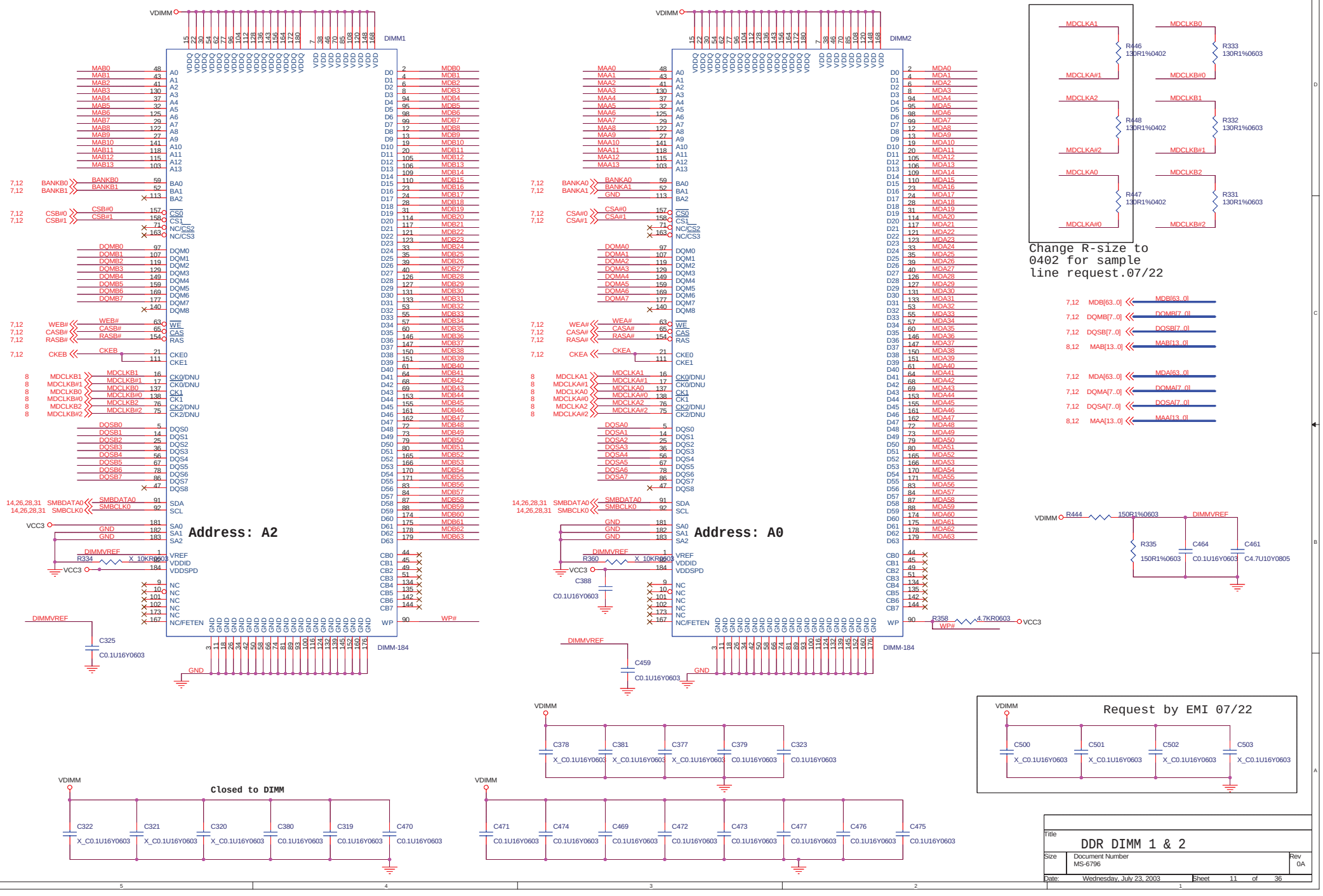
DIMM1
DIMM2
DIMM-184
Address: A2
Address: A0
VDIMM
VCC3
DIMMVREF
R334 X_10KR0603
R360 X_10KR0603
R358 4.7KR0603
C325 C0.1U16Y0603
C388 C0.1U16Y0603
C459 C0.1U16Y0603
R446 130R1%0402
R448 130R1%0402
R447 130R1%0402
R333 130R1%0603
R332 130R1%0603
R331 130R1%0603
Change R-size to 0402 for sample line request.07/22
R444 150R1%0603
R335 150R1%0603
C464 C0.1U16Y0603
C461 C4.7U10Y0805
Request by EMI 07/22
C500 X_C0.1U16Y0603
C501 X_C0.1U16Y0603
C502 X_C0.1U16Y0603
C503 X_C0.1U16Y0603
C378 X_C0.1U16Y0603
C381 X_C0.1U16Y0603
C377 X_C0.1U16Y0603
C379 C0.1U16Y0603
C323 C0.1U16Y0603
Closed to DIMM
C322 X_C0.1U16Y0603
C321 X_C0.1U16Y0603
C320 X_C0.1U16Y0603
C380 C0.1U16Y0603
C319 C0.1U16Y0603
C470 C0.1U16Y0603
C471 C0.1U16Y0603
C474 C0.1U16Y0603
C469 C0.1U16Y0603
C472 C0.1U16Y0603
C473 C0.1U16Y0603
C477 C0.1U16Y0603
C476 C0.1U16Y0603
C475 C0.1U16Y0603
Title
DDR DIMM 1 & 2
Size
Document Number
MS-6796
Rev
0A
Date: Wednesday, July 23, 2003
Sheet 11 of 36

Check Size & Number

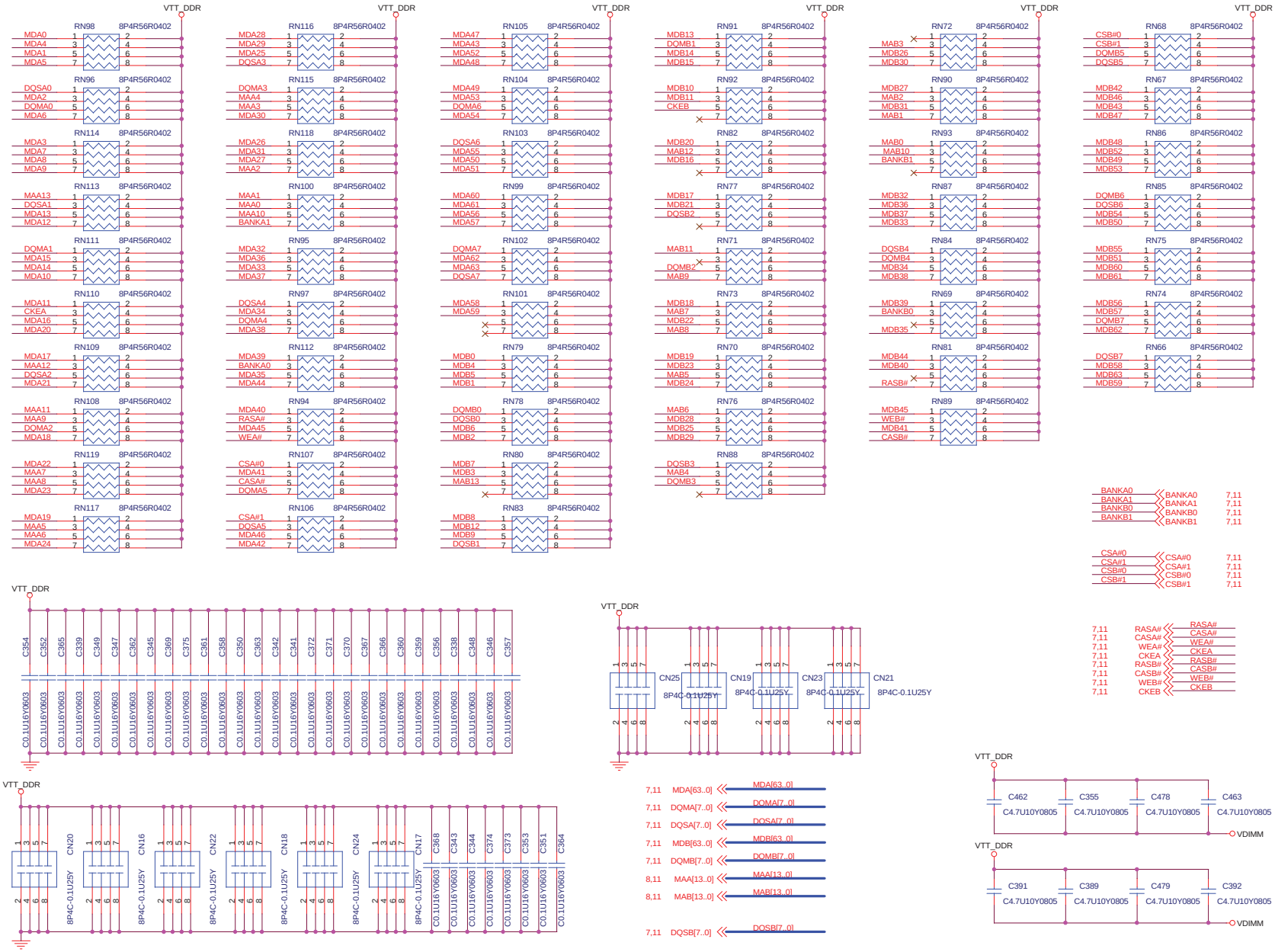

Title	DDR Terminator resistor
Size	Document Number MS-6796
Rev	0A
Date:	Wednesday, July 23, 2003
Sheet	12 of 36

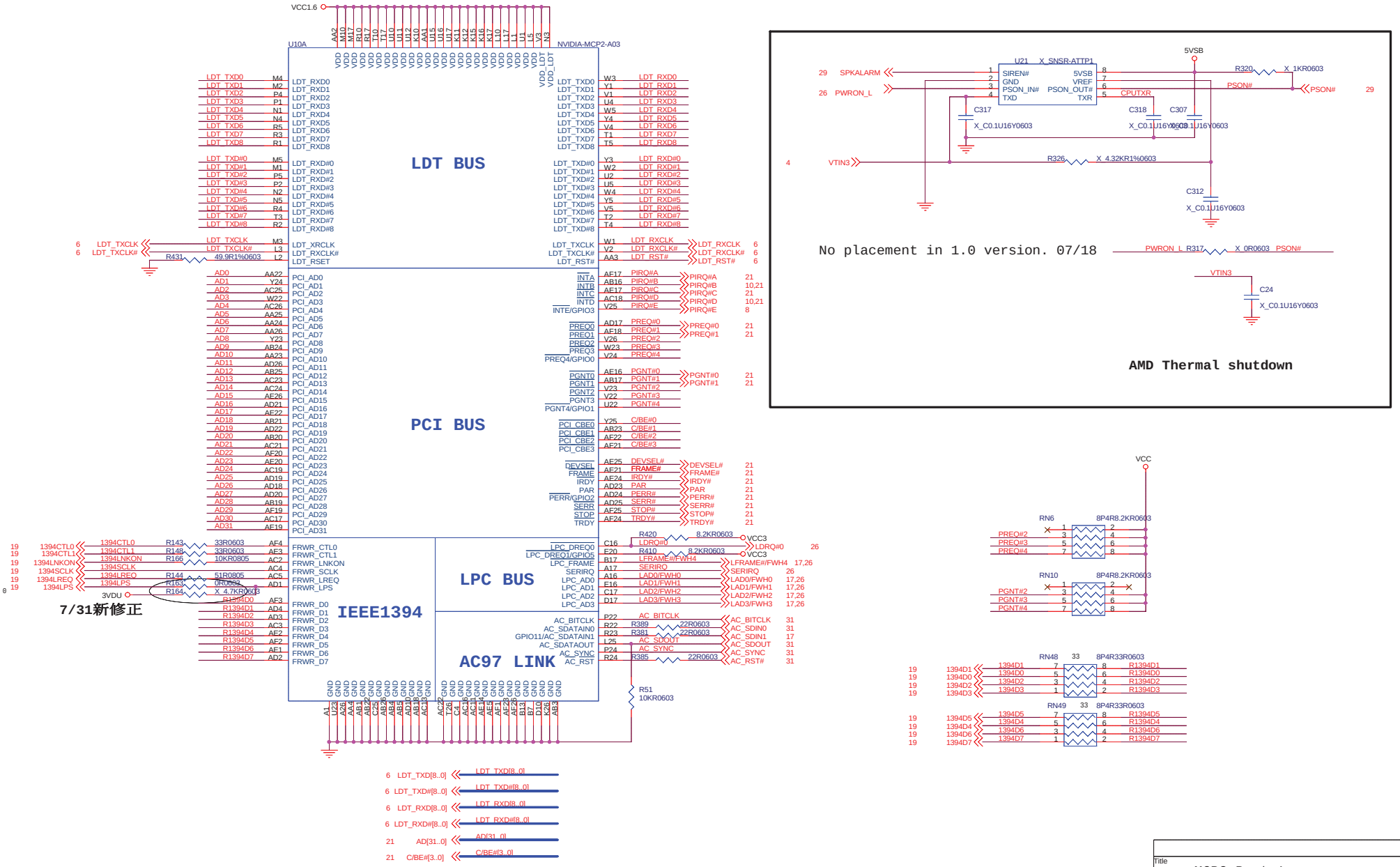

Title: MCP2 Part 1

Size: | Document Number: MS-6796 | Rev: 0A

Date: Wednesday, July 23, 2003 | Sheet 13 of 36

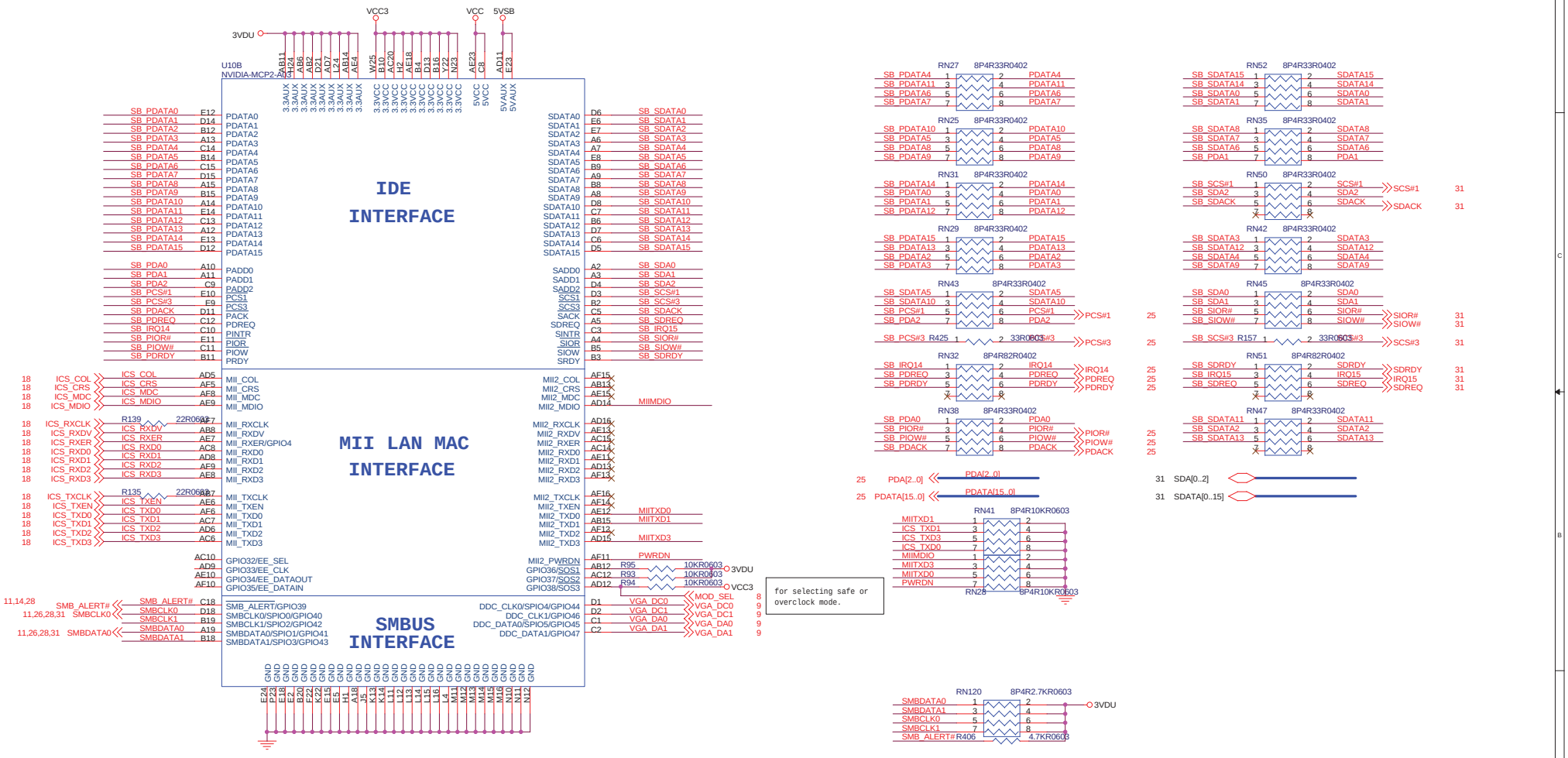

Title
MCP2 Part 2

Size	Document Number	Rev
	MS-6796	0A

Date: Wednesday, July 23, 2003 Sheet 14 of 36

EXTSMI# change CD_SMI#
the BIOS code need to change
the sleep button function.

Change to 22PF for
correct freq. 6/3

No placement by MCP2T A4 version. 07/02

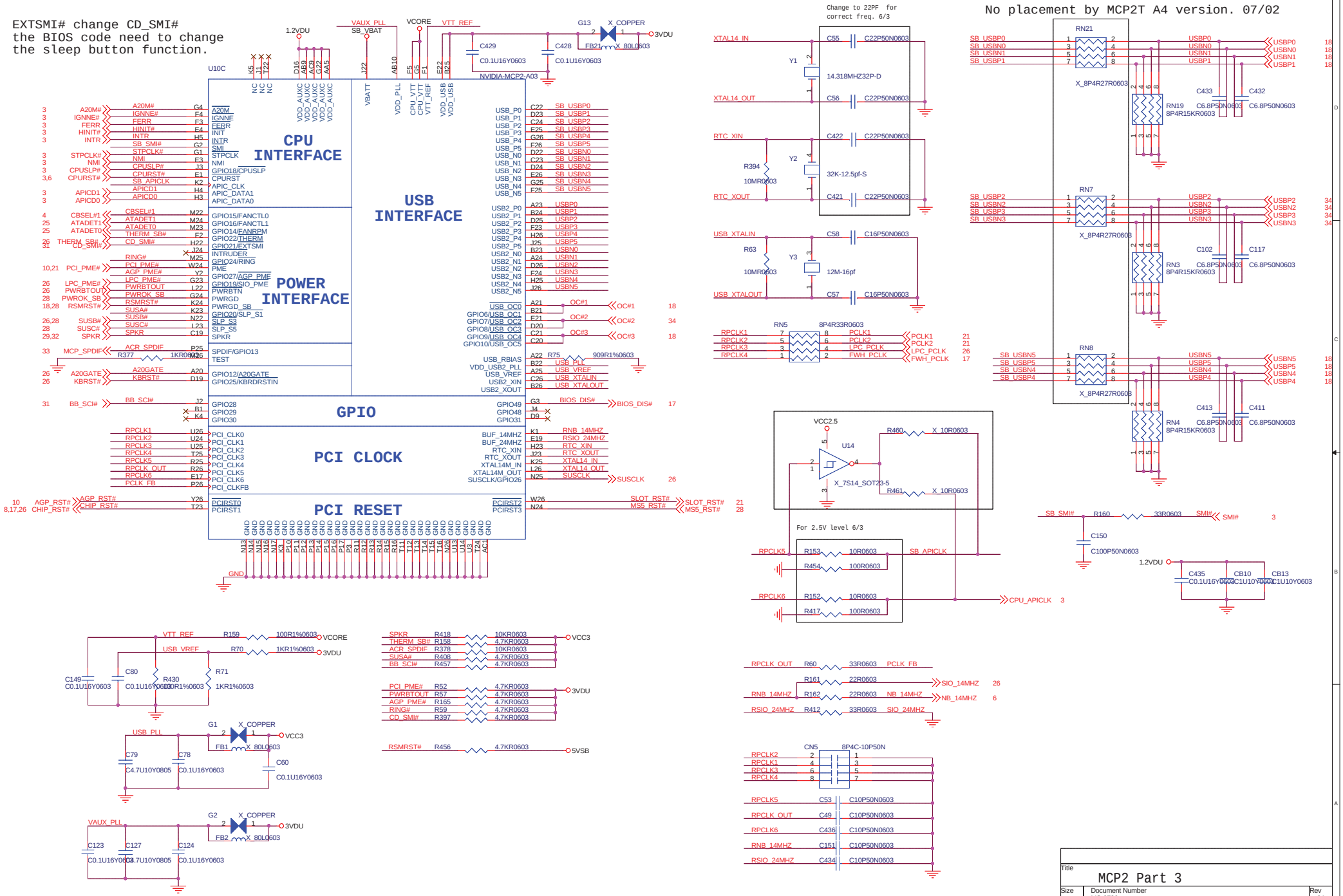

Title	MCP2 Part 3	
Size	Document Number MS-6796	Rev 0A
Date: Wednesday, July 23, 2003	Sheet 15 of 36	

Title <Title>		
Size B	Document Number <Doc>	Rev <RevCode>
Date: Tuesday, July 22, 2003	Sheet 16 of 36	

Check MDC function

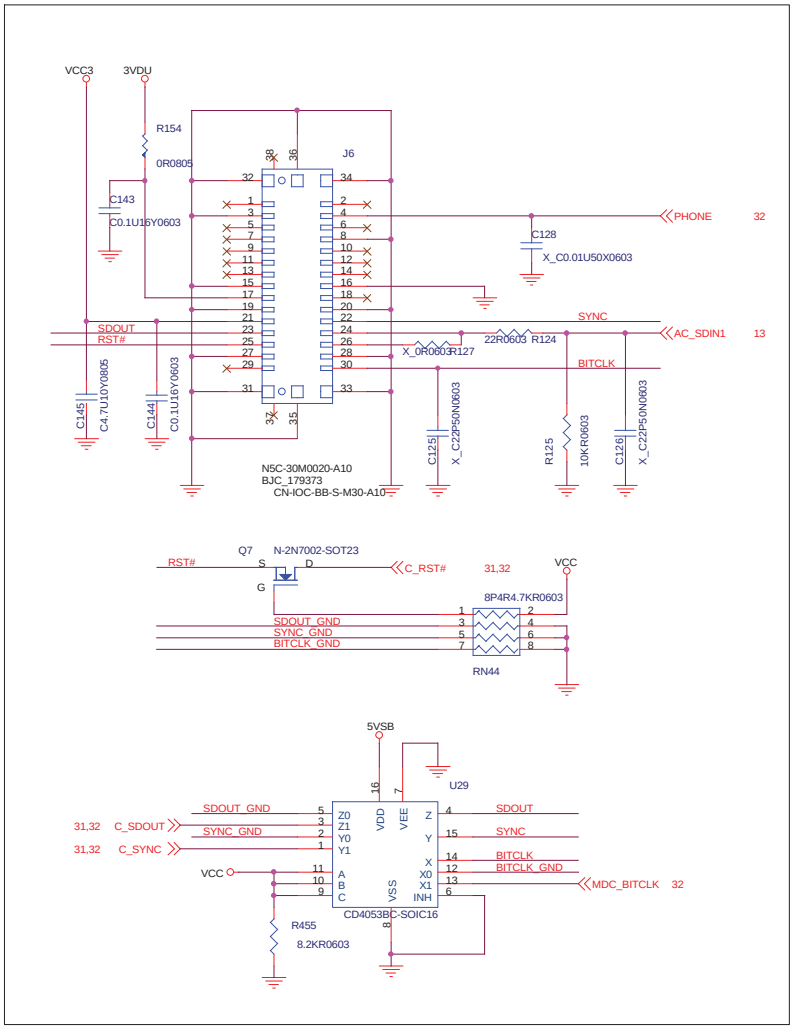

LPC Flash Rom

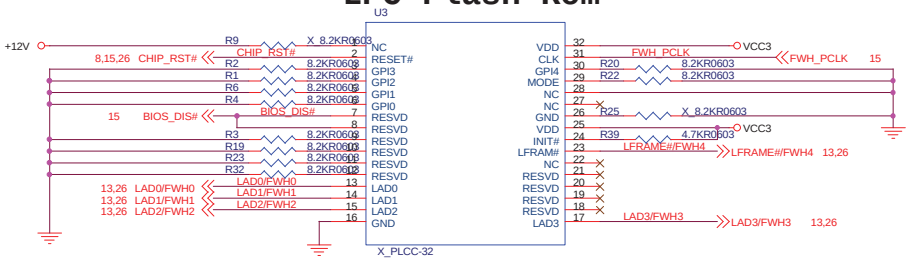

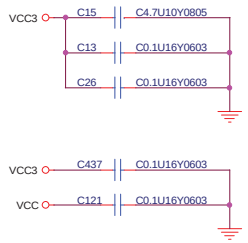

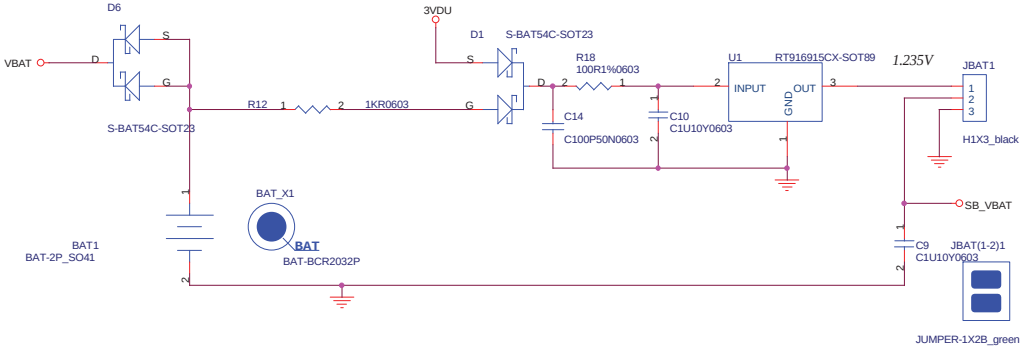

Title	MDC & BIOS & Battery	
Size	Document Number MS-6796	Rev 0A
Date: Wednesday, July 23, 2003	Sheet 17 of 36	

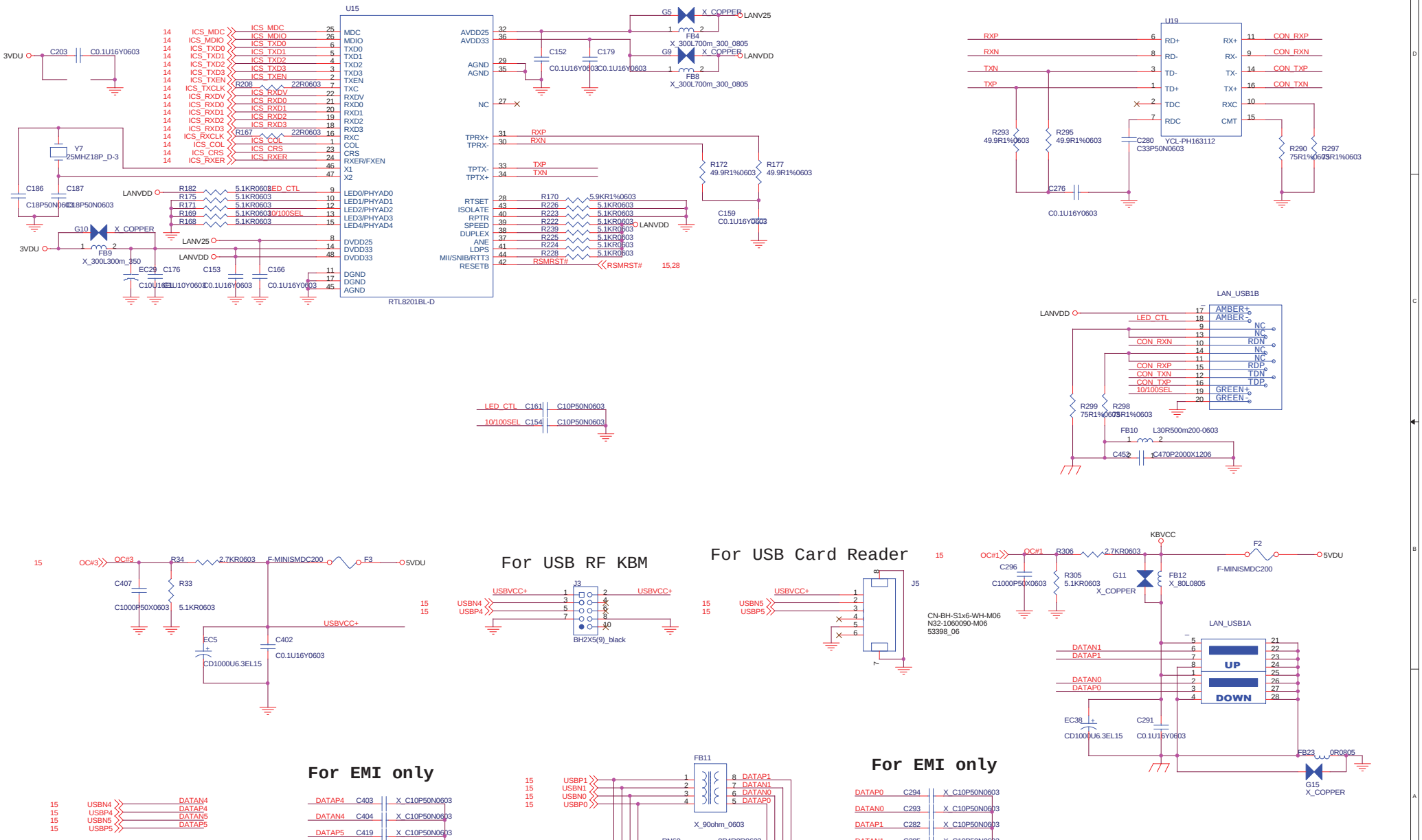

Title	MII LAN & USB		
Size	Document Number MS-6796		Rev 0A
Date: Wednesday, July 23, 2003		Sheet 18 of 36	

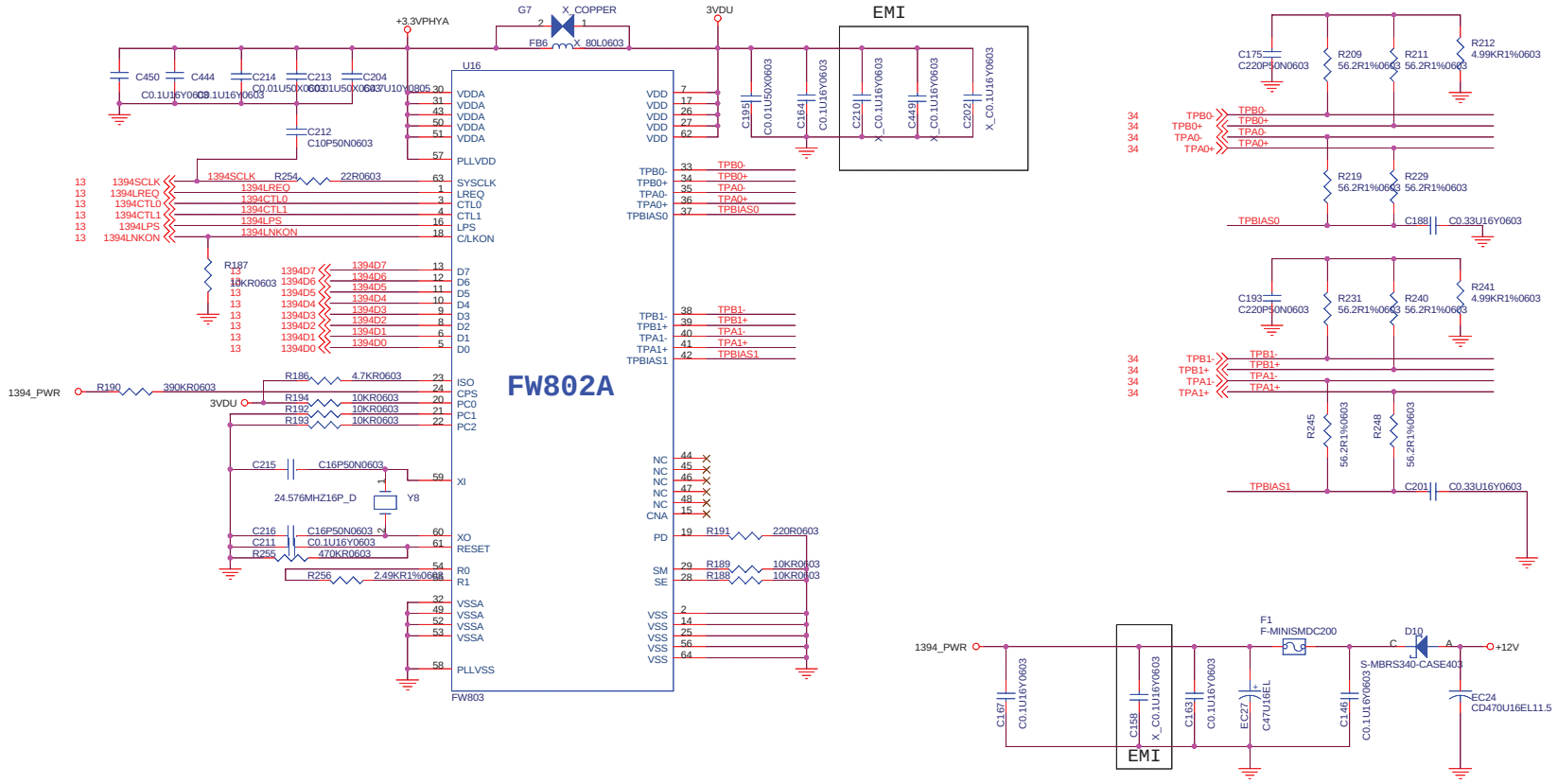

Title	1394 PHY		
Size	Document Number MS-6796		Rev 0A
Date: Wednesday, July 23, 2003		Sheet 19 of 36	

Title	<Title>
Size A	Document Number <Doc>
Rev	<RevCode>
Date: Tuesday, July 22, 2003	Sheet 20 of 36

IDSEL= AD22
INT#= A
PGNT#= 0
PREQ#= 0
PCLK= 1

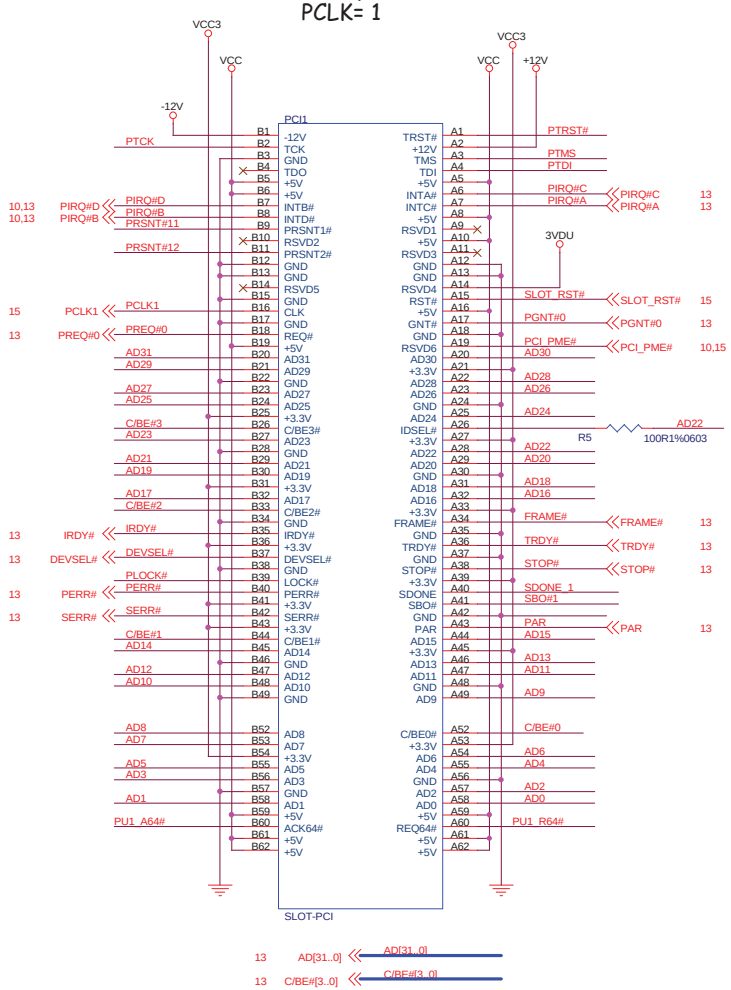

IDSEL= AD23
INT#= B
PGNT#= 1
PREQ#= 1
PCLK= 2

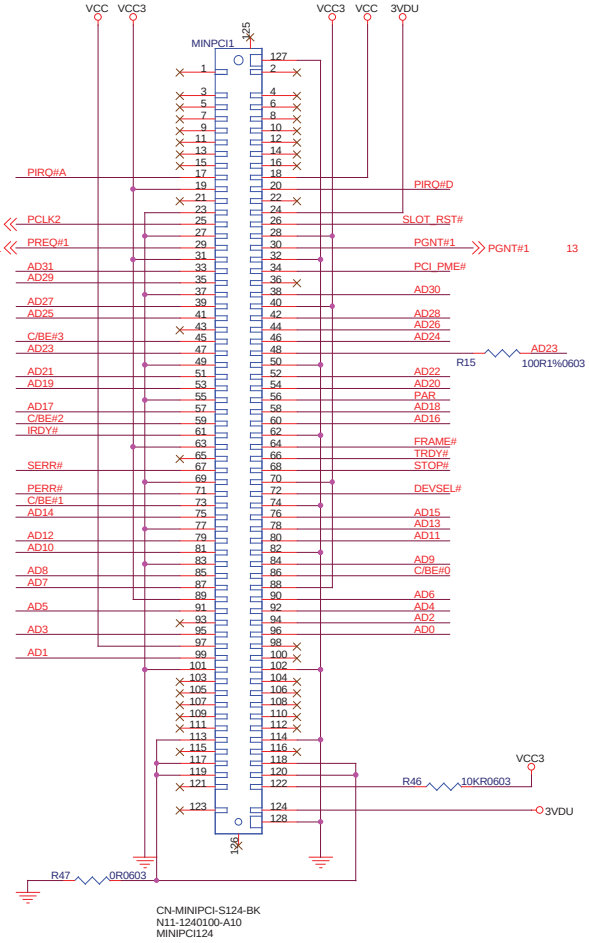

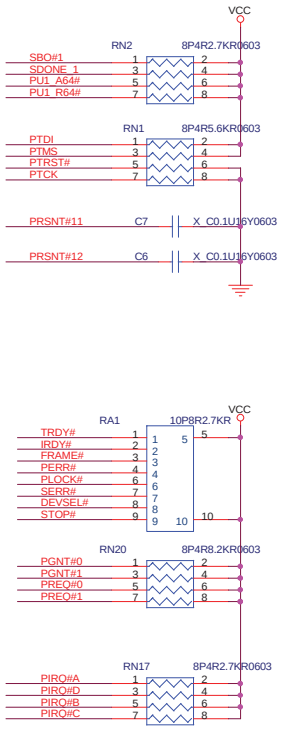

Title	PCI Slot 1 & 2
Size	Document Number MS-6796
Rev	0A
Date:	Wednesday, July 23, 2003
Sheet	21 of 36

Title	<Title>
Size A	Document Number <Doc>
Rev	<RevCode>
Date: Tuesday, July 22, 2003	Sheet 22 of 36

Title	<Title>
Size A	Document Number <Doc>
Rev	<RevCode>
Date: Tuesday, July 22, 2003	Sheet 23 of 36

Title	<Title>
Size A	Document Number <Doc>
Rev	<RevCode>
Date: Tuesday, July 22, 2003	Sheet 24 of 36

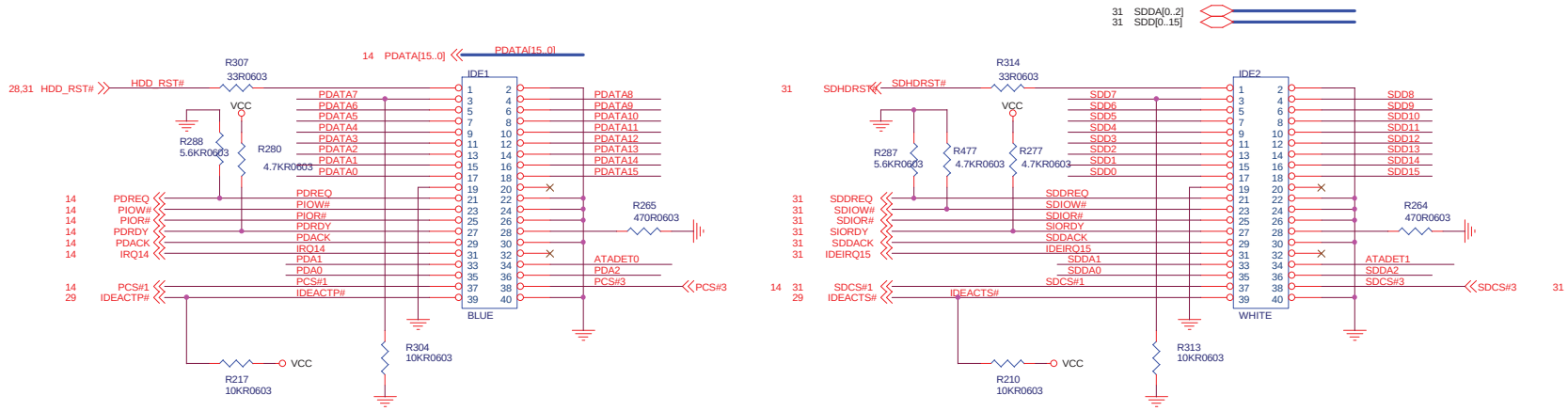

W83627 KBM CONNECTOR

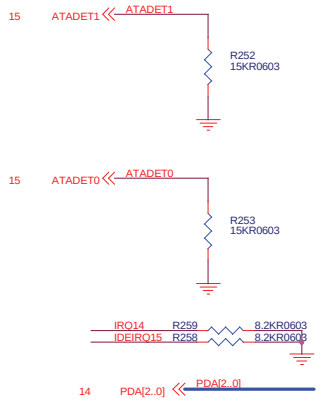

Title	IDE Connector & KB/MS	
Size	Document Number MS-6796	Rev 0A
Date: Wednesday, July 23, 2003	Sheet 25 of 36	

LPC SUPER I/O 49M292

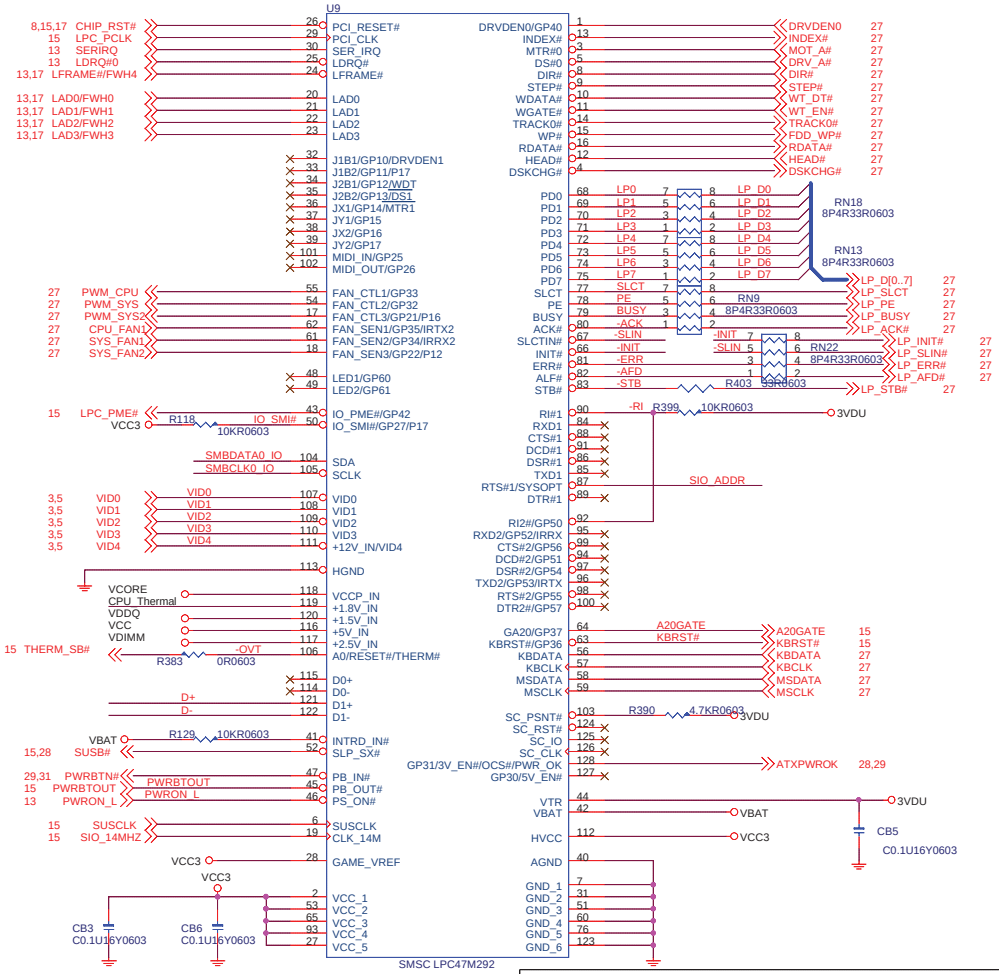

THERMAL SENSOR BLOCK

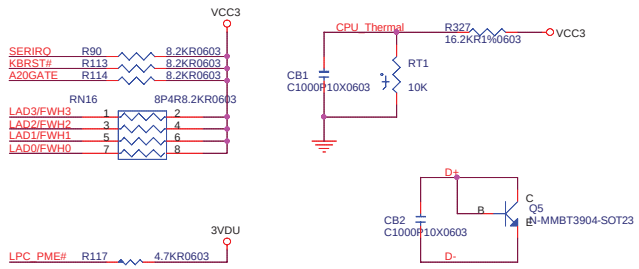

FOR BENQ KBM USE

Del for PM Request. because the location places SYSFAN2.

LPC I/O DECOUPLING CAPACITORS

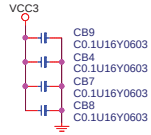

SUPER I/O STRAPPING RESISTOR

LM86 DIGITAL TEMPERATURE SENSOR

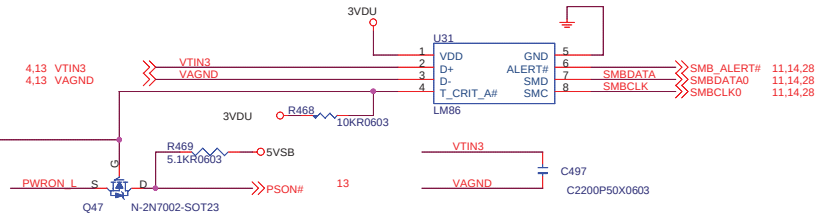

24Oct02-Jerry-Per SMSC FAE request.

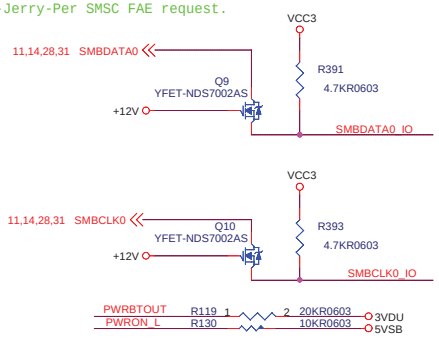

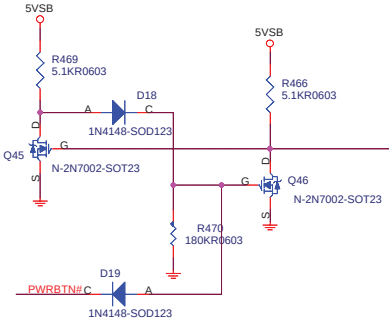

T_crit_A# letch circuit.07/15

Add for CPU Thermal and Fan Speed control solution. 07/15

Micro Star Restricted Secret

Title	LPC I/O & HW MONITOR	Rev
Document Number	MS-6725D2	0A
MICRO-STAR INT'L CO.,LTD. No. 69, Li-De St, Jung-He City, Taipei Hsien, Taiwan http://www.msi.com.tw	Last Revision Date: Wednesday, July 23, 2003	
	Sheet 26 of 36	

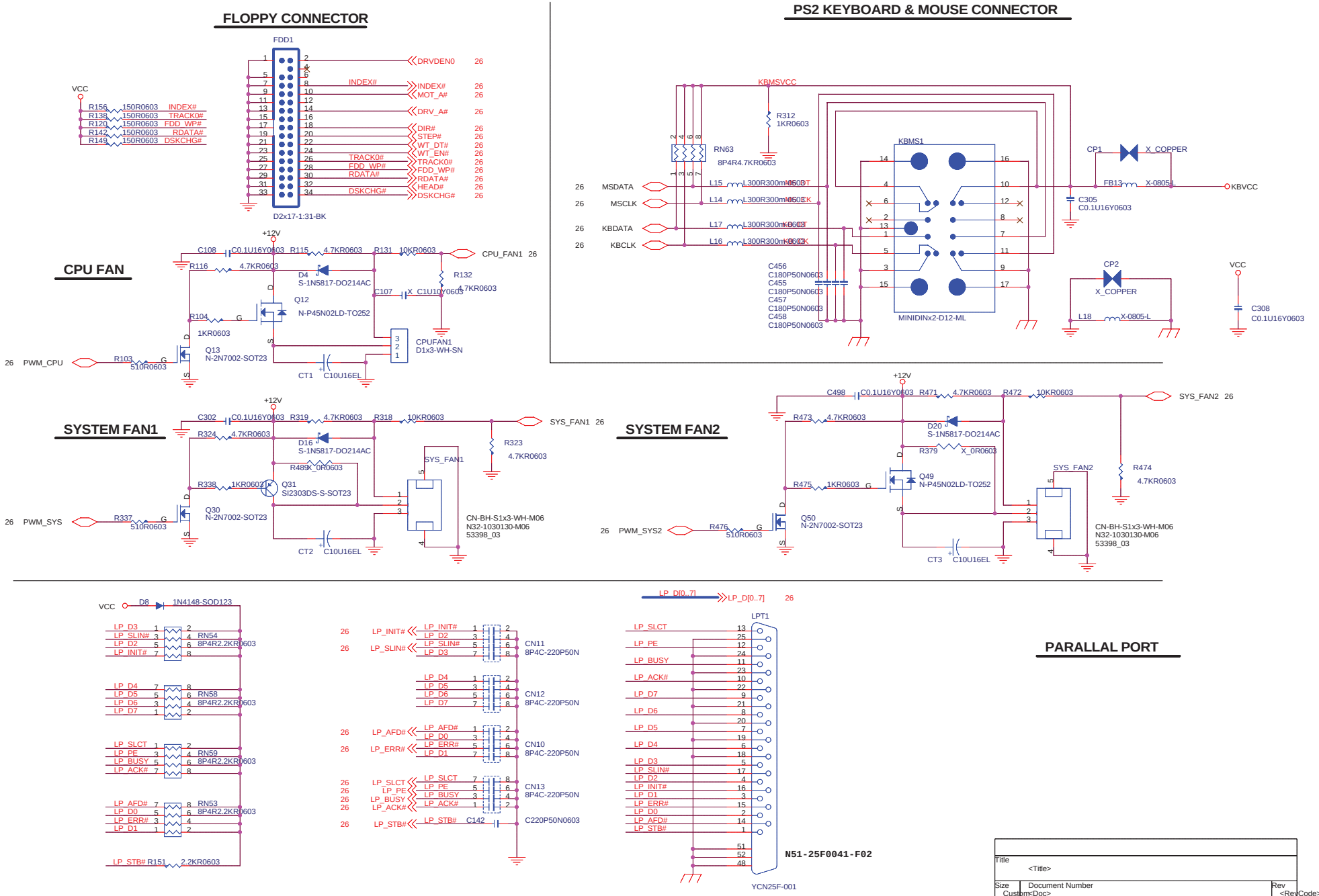

Title	<Title>		
Size	Document Number		Rev
Custom	<Doc>		<RevCode>
Date:	Wednesday, July 23, 2003	Sheet 27 of 36	

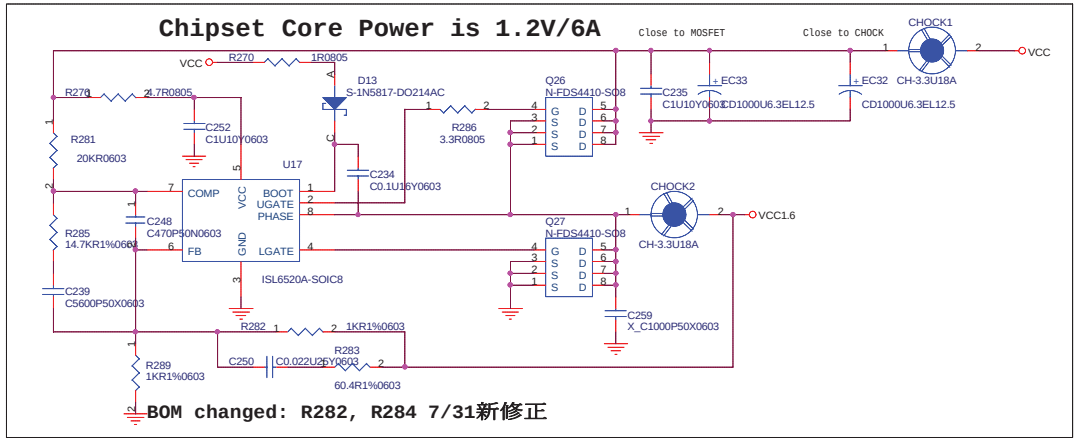

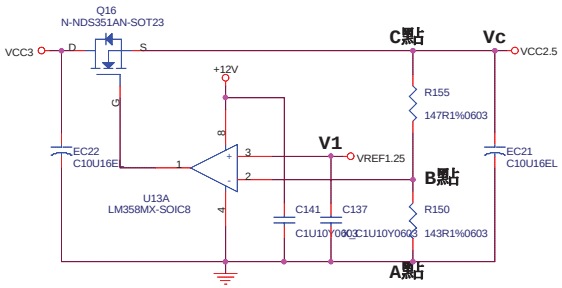

25 mils Trace / 12 mils Space

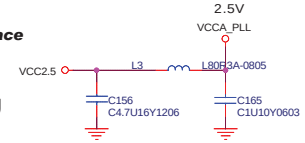

Closed to CPU

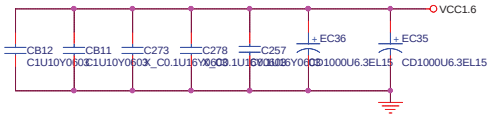

運算放大器分析

工作原理:藉由B點的回授 ,運算放大器可決定MOSFET的導通量.
理想運算放大器中,跨在+,-兩端雙電壓為0V.
依據KVL, -Vba+Vbc+Vc= 0或Vbc= Vba-Vc= V1-Vc
由B點的KCL可得:(V1/R55)+[(V1-Vc)/R48]=0
則Vc=uV1, u= 1+(R48/R55)
故Vc= (1+R48/R55)*V1

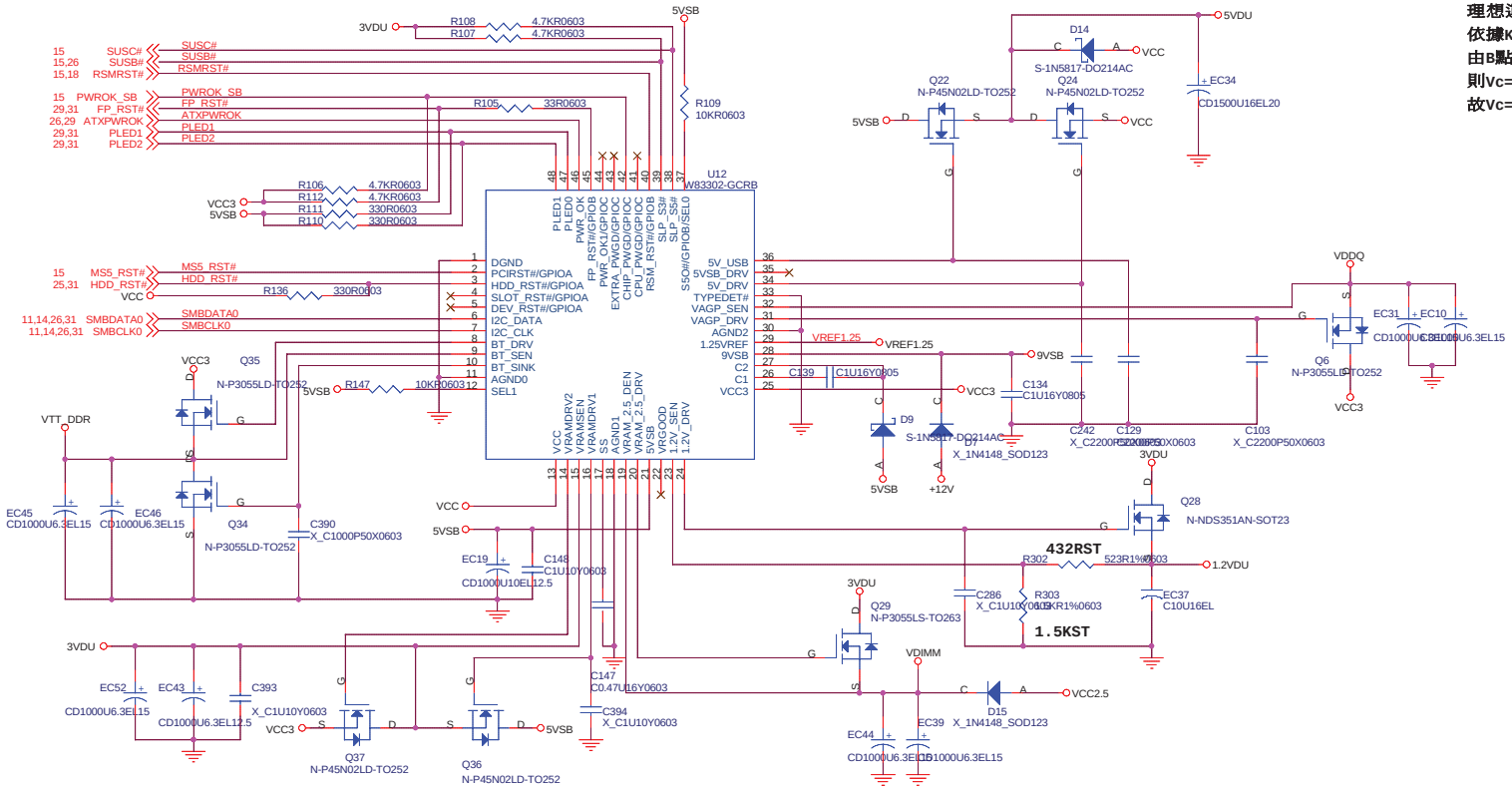

Title	MS5 ACPI Controller	
Size	Document Number MS-6796	Rev 0A
Date: Wednesday, July 23, 2003	Sheet 28 of 36	

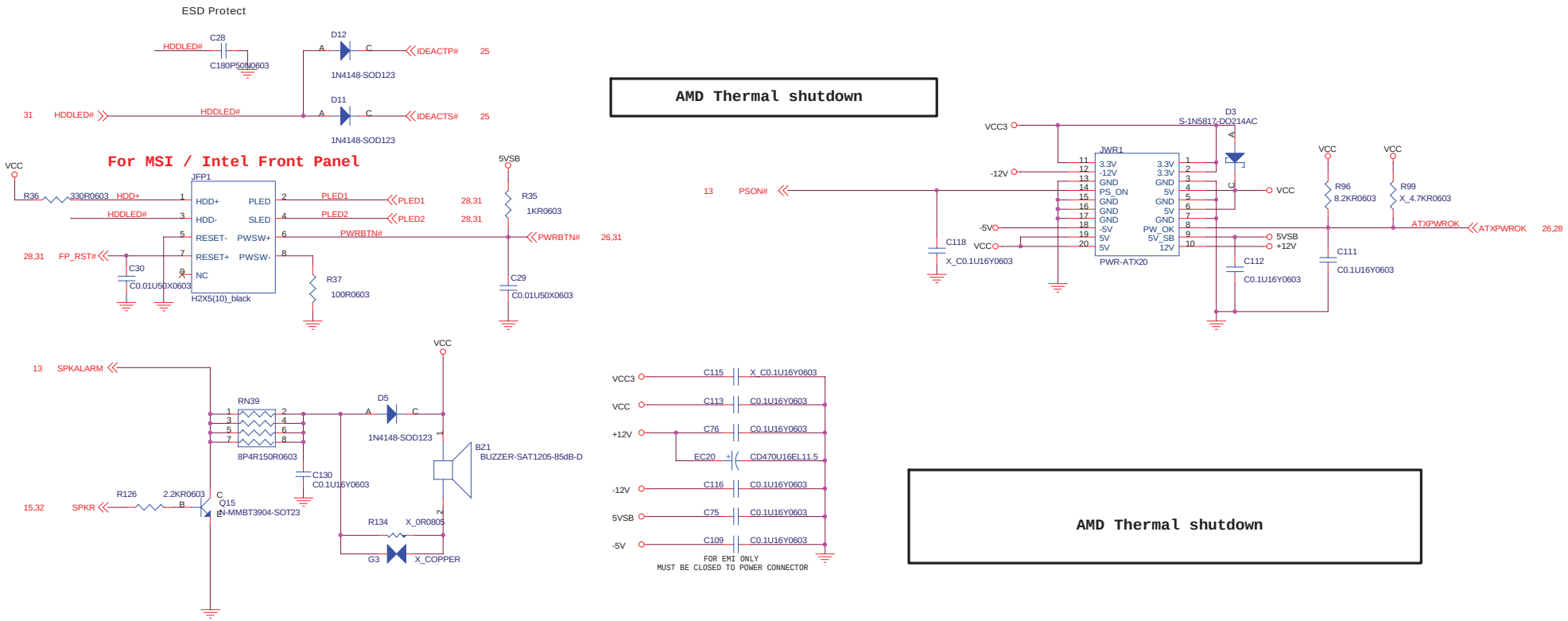

Title	Front Panel & ATX Power		
Size	Document Number MS-6796		Rev 0A
Date: Wednesday, July 23, 2003		Sheet 29 of 36	

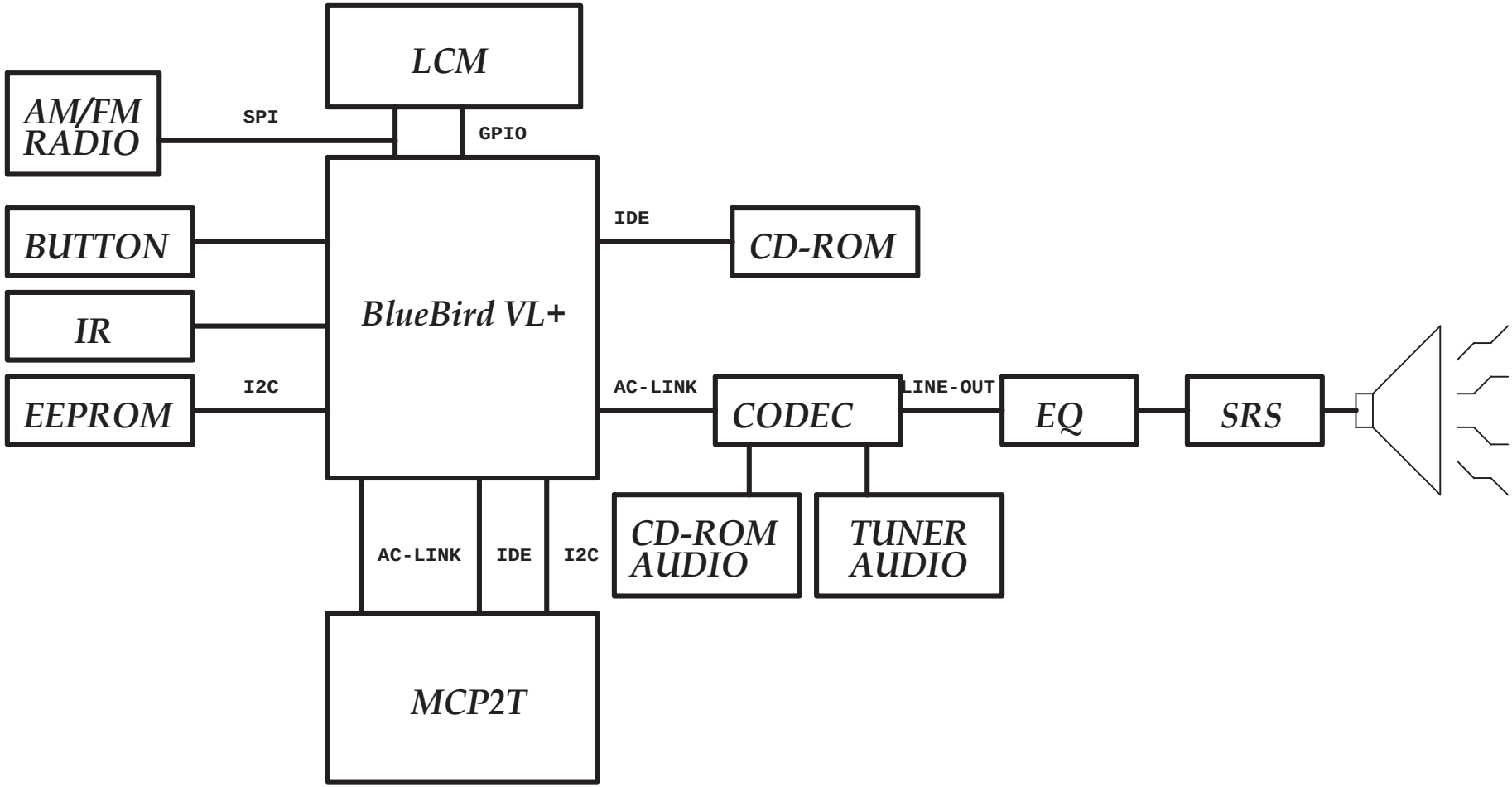

Title	Block Diagram 2	
Size A	Document Number MS-6796	Rev 0A
Date: Tuesday, July 22, 2003	Sheet 30 of 36	

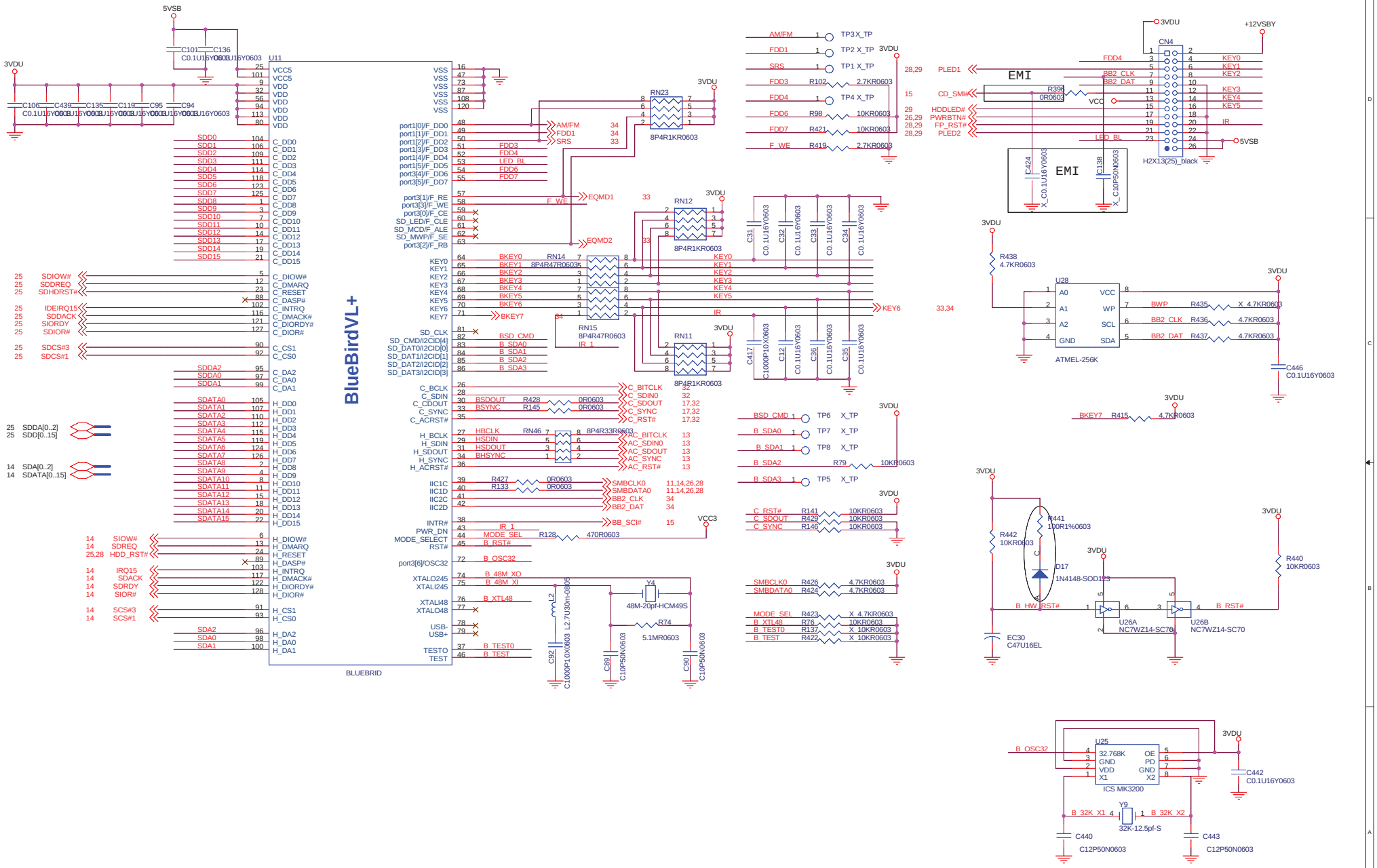
BlueBirdVL+
BLUEBRID
U11
5VSB
3VDU
+12VSBY
EMI
CN4
H2X13(25)_black
U28
ATMEL-256K
U26A
NC7WZ14-SC70
U26B
NC7WZ14-SC70
U25
ICS MK3200
Y4
48M-20pf-HCM49S
Y9
32K-12.5pf-S
RN23
8P4R1KR0603
RN12
8P4R1KR0603
RN14
8P4R47R0603
RN15
8P4R47R0603
RN11
8P4R1KR0603
RN46
8P4R33R0603
L2
L2.7U30m-0805
D17
1N4148-SOD123
R441
100R1%0603
R442
10KR0603
R440
10KR0603
EC30
C47U16EL
R438
4.7KR0603
C446
C0.1U16Y0603
C442
C0.1U16Y0603
C440
C12P50N0603
C443
C12P50N0603
C92
C1000P10X0603
C89
C10P50N0603
C90
C10P50N0603
C424
X_C0.1U16Y0603
C138
X_C10P50N0603
Title
BlueBird & LCM Conn
Size
Custom
Document Number
MS-6796
Rev
0A
Date:
Wednesday, July 23, 2003
Sheet
31
of
36

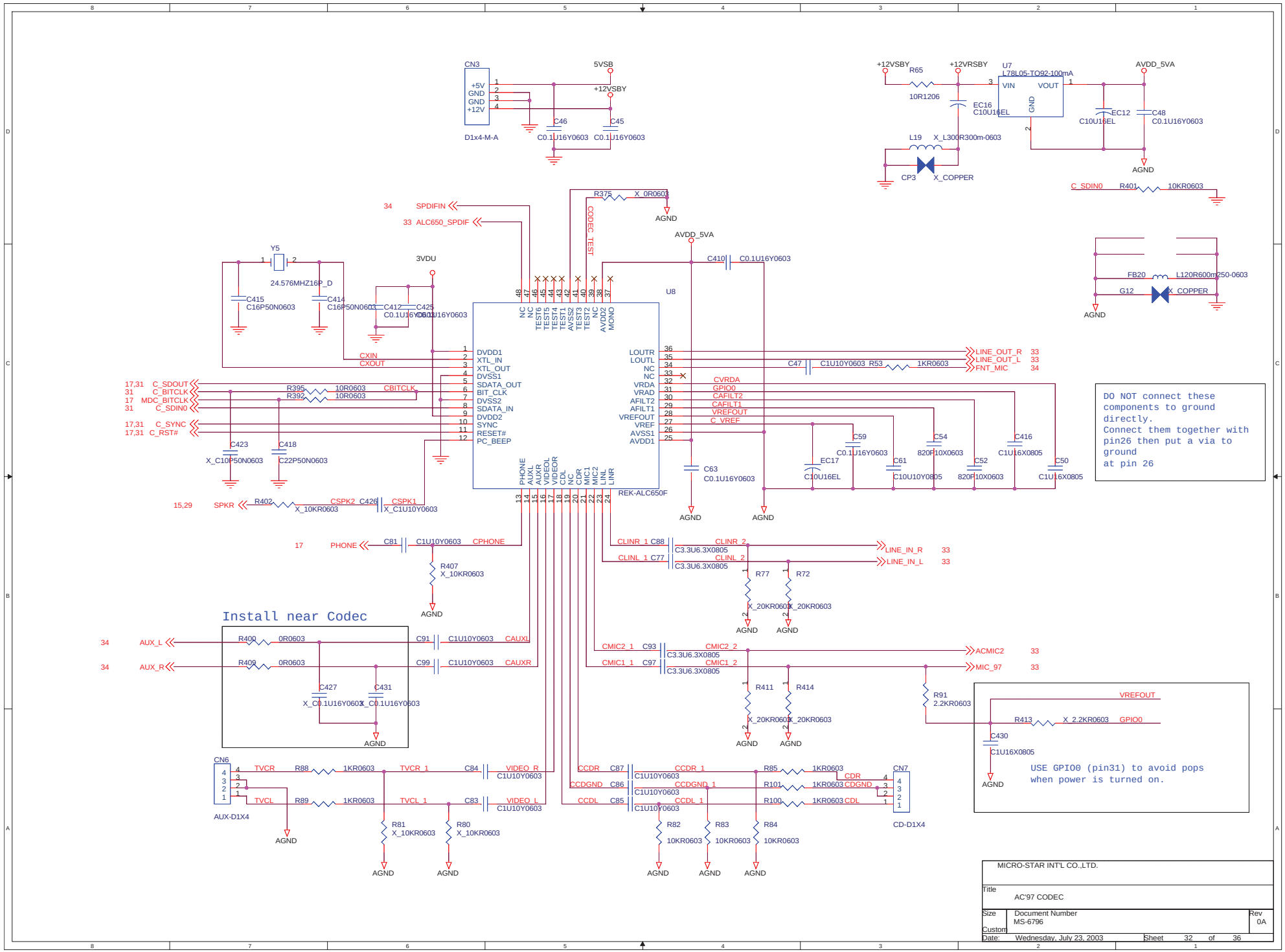

MICRO-STAR INT'L CO.,LTD.	
Title	AC'97 CODEC
Size / Custom	Document Number MS-6796 — Rev 0A
Date: Wednesday, July 23, 2003	Sheet 32 of 36

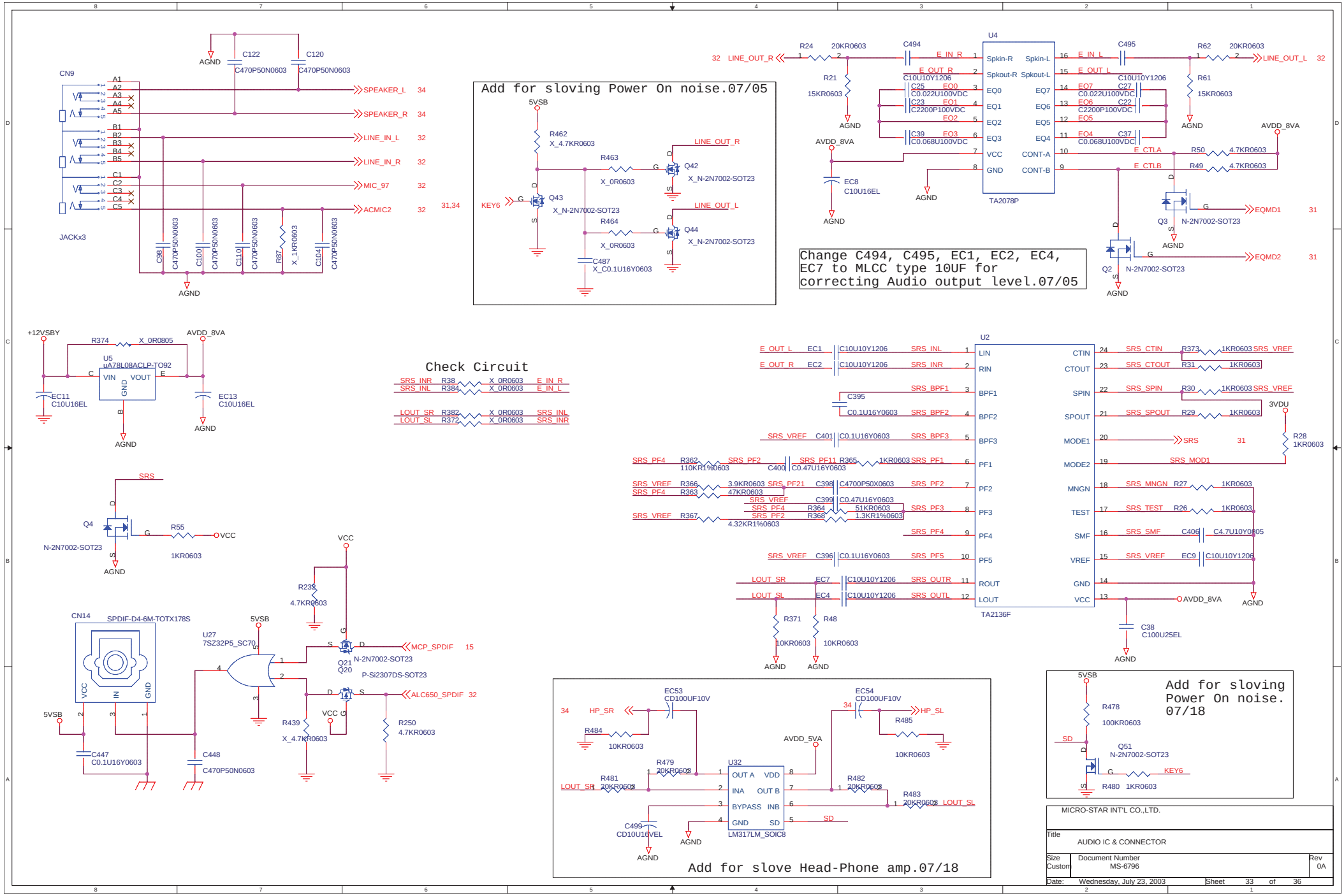
CN9
JACKx3
SPEAKER_L 34
SPEAKER_R 34
LINE_IN_L 32
LINE_IN_R 32
MIC_97 32
ACMIC2 32 31,34
C122 C470P50N0603
C120 C470P50N0603
AGND
Add for sloving Power On noise.07/05
5VSB
R462 X_4.7KR0603
R463 X_0R0603
R464 X_0R0603
Q42 X_N-2N7002-SOT23
Q43 X_N-2N7002-SOT23
Q44 X_N-2N7002-SOT23
LINE_OUT_R
LINE_OUT_L
KEY6
C487 X_C0.1U16Y0603
U4
TA2078P
LINE_OUT_R 32
LINE_OUT_L 32
R24 20KR0603
R21 15KR0603
R62 20KR0603
R61 15KR0603
C494 C10U10Y1206
C495 C10U10Y1206
AVDD_8VA
EC8 C10U16EL
Change C494, C495, EC1, EC2, EC4, EC7 to MLCC type 10UF for correcting Audio output level.07/05
R50 4.7KR0603
R49 4.7KR0603
Q3 N-2N7002-SOT23
Q2 N-2N7002-SOT23
EQMD1 31
EQMD2 31
+12VSBY
R374 X_0R0805
U5 uA78L08ACLP-TO92
EC11 C10U16EL
EC13 C10U16EL
Check Circuit
SRS_INR R38 X_0R0603 E_IN_R
SRS_INL R384 X_0R0603 E_IN_L
LOUT_SR R382 X_0R0603 SRS_INL
LOUT_SL R372 X_0R0603 SRS_INR
U2
TA2136F
SRS
Q4 N-2N7002-SOT23
R55 1KR0603
VCC
CN14 SPDIF-D4-6M-TOTX178S
U27 7SZ32P5_SC70
R235 4.7KR0603
Q21 N-2N7002-SOT23
Q20 P-Si2307DS-SOT23
MCP_SPDIF 15
ALC650_SPDIF 32
R439 X_4.7KR0603
R250 4.7KR0603
C447 C0.1U16Y0603
C448 C470P50N0603
EC53 CD100UF10V
EC54 CD100UF10V
HP_SR 34
HP_SL 34
R484 10KR0603
R485 10KR0603
AVDD_5VA
U32 LM317LM_SOIC8
R479 20KR0603
R481 20KR0603
R482 20KR0603
R483 20KR0603
C499 CD10U16VEL
Add for slove Head-Phone amp.07/18
R478 100KR0603
Q51 N-2N7002-SOT23
R480 1KR0603
Add for sloving Power On noise. 07/18
MICRO-STAR INT'L CO.,LTD.
Title
AUDIO IC & CONNECTOR
Size Custom
Document Number MS-6796
Rev 0A
Date: Wednesday, July 23, 2003
Sheet 33 of 36

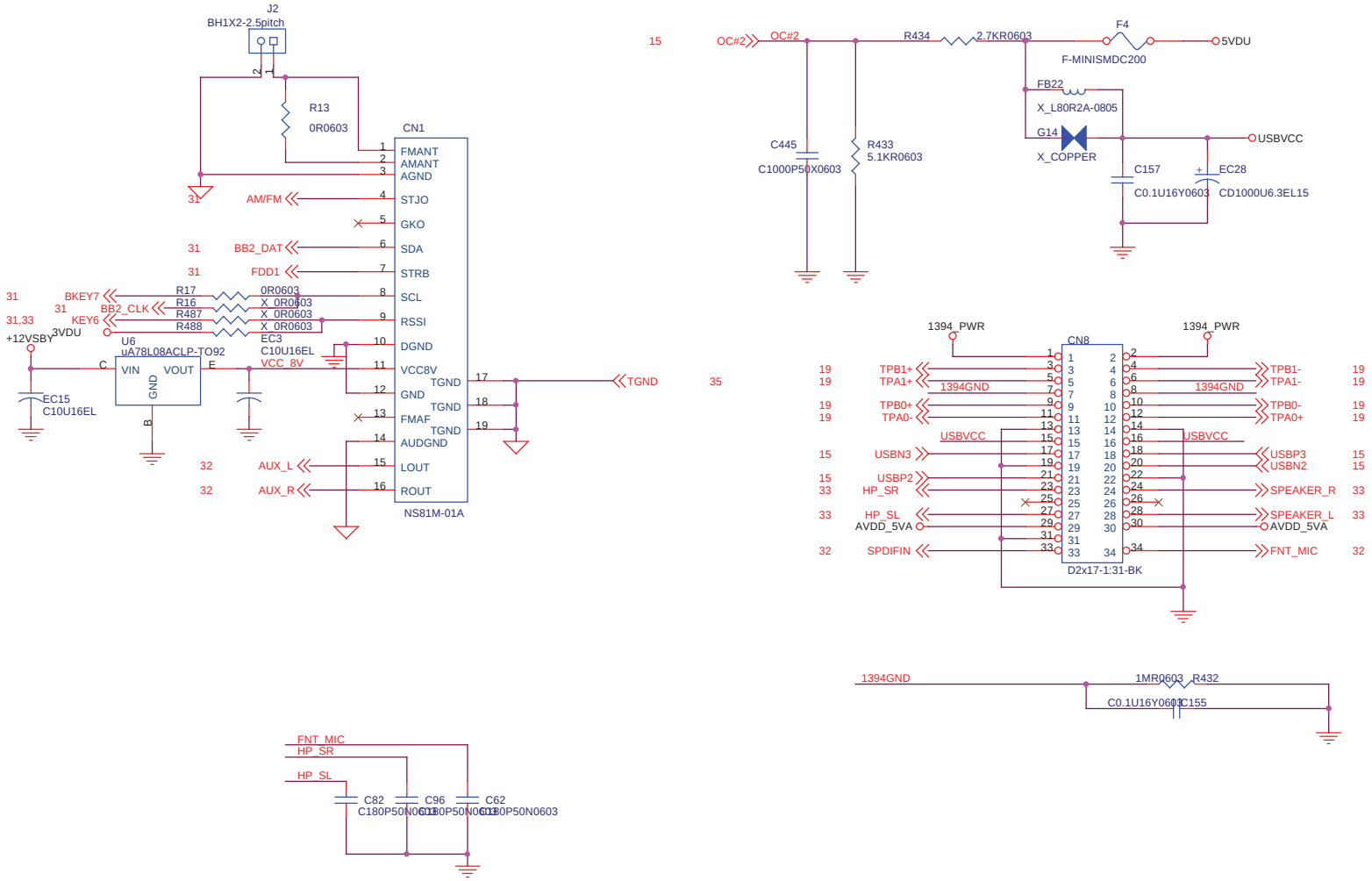

Title	Tuner & FrontI/O		
Size B	Document Number MS-6796		Rev 0A
Date: Wednesday, July 23, 2003		Sheet 34 of 36	

PCB OTHER COMPONENT

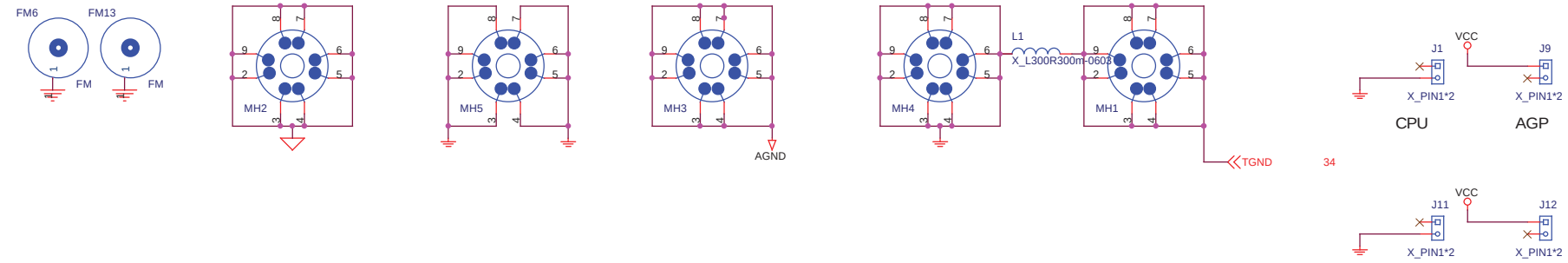

System Decoupling Capacitors

High Freq. return current decoupling

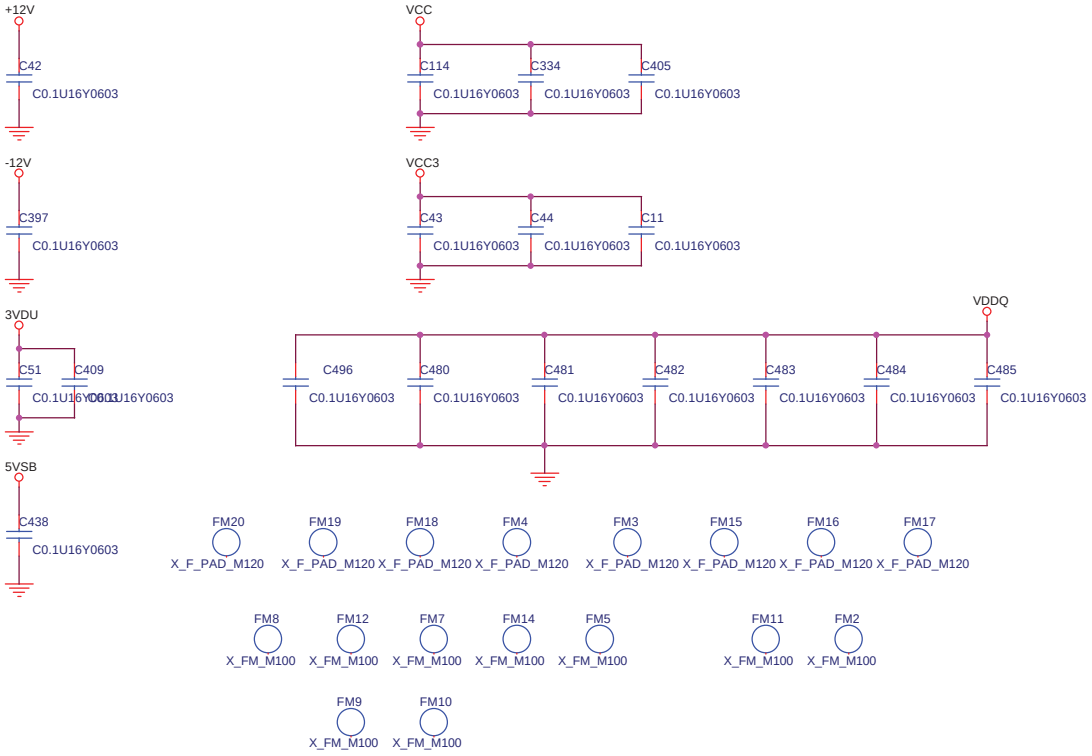

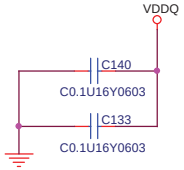

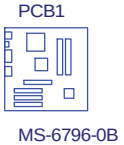

MICRO-STAR INT'L CO.,LTD.		
Title: DECOUPLING CAPACITOR		
Size: B	Document Number: MS-6796	Rev: 0A
Date: Wednesday, July 23, 2003	Sheet 35 of 36	

DATE	DESCRIPTION
3/21	1. First version initiated.
6/2	1. Change FNT-MIC connection from pin45 to pin44.
6/3	1. Change C421,C422,C55,C56 for correct freq.
	2. Change R152,R153 to 3KR for output 2.5V level.

Title	History	
Size	Document Number MS-6796	Rev 0A
Date: Tuesday, July 22, 2003	Sheet 36 of 36	