MS-6791

Version 100
06/16/2003 Update

Willamette/Northwood 478pin mPGA-B Processor Schematics

** Northwood / Prescott mPGA-478B Processor*
**SIS 648FX / 661+963 / 963L*
**REALTEK 8100C LAN*
**REALTEK 8801B 1394 PHY*
**Winbond 83697HF I/O*
**USB 2.0 support x6 (integrated into 963 / 963L)*
**ALC 202A / 655 AC97 CODEC*

ERP BOM	Function Description	
501/601-6791	Opt : STD	648FX+963L,W/LAN,W/655,WO/1394
01S		Intel pin define, 4 front / 2 rear USB
501/601-6791	Opt : A	648FX+963L,W/LAN,W/202A,WO/1394
02S		L2 pin define, 4 front / 2 rear USB
501/601-6791	Opt : B	648FX+963,W/LAN,W/1394,W/655,
03S		W/L2 fan control, L2 pin define, 2 front / 4 rear USB
501/601-6791	Opt :	

Cover Sheet	1
Block Diagram	2
MAIN CLOCK GEN & DDR CLOCK BUFFER	3
mPGA478-B INTEL CPU Sockets	4 - 5
SIS 648FX / 661	6 - 9
DDR SLOT	10
DDR TERMINATOR	11
SIS 963 / 963L	12 - 14
AGP SLOT	15
PCI SLOTS	16
LAN CONTROLLER	17
RJ45 CONNECTOR	18
IDE CONNECTOR	19
USB CONNECTOR	20
AC'97 CODEC	21
AUDIO CONNECTOR & VGA	22
FAN	23
LPC I/O(W83697HF)	24
PARALLEL & SERIAL PORT	25
VRM 10	26
ACPI CONTROLLER	27
ATX POWER CON	28
FRONT PANEL	29
IEEE 1394	30
Decoupling Capacitor	31

System Block Diagram

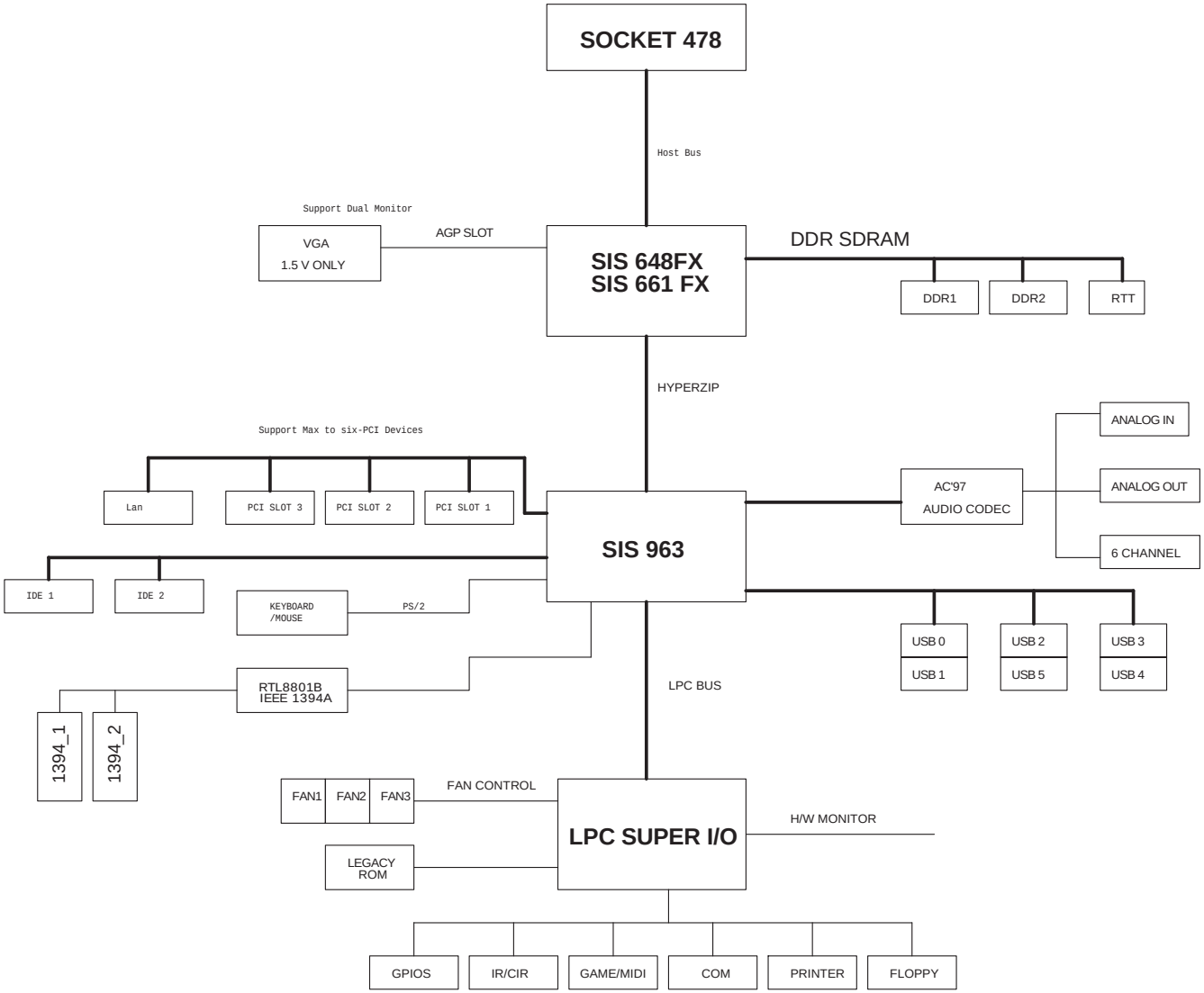

GPIO Table on SIS963

GPIO_0	I/O	MAIN	Pull-Down
GPIO_1	I/O	MAIN	Pull-Down
GPIO_2	I/O	MAIN	THERM#
GPIO_3	I/O	MAIN	EXTSMI#
GPIO_4	I/O	MAIN	Pull-Down
GPIO_5	I/O	MAIN	PREQ#5(Pull-Up)
GPIO_6	I/O	MAIN	PGNT#5(Pull-Up)
GPI_7	I/O	RESUME	LAN_WAKE#
GPI_8	I	RESUME	RING
GPI_9	I	RESUME	RESERVED
GPI_10	I	RESUME	RESERVED
GPIO_11	I/O	RESUME	RESERVED
GPIO_12	I/O	RESUME	Pull-Down
GPIO_13	I/O	RESUME	Flash Rom protection H: Disable, L: Enable
GPIO_14	I/O	RESUME	Pull-Down
GPIO_15	I/O	RESUME	KBDAT
GPIO_16	I/O	RESUME	KBCLK
GPIO_17	I/O	RESUME	MSDAT
GPIO_18	I/O	RESUME	MSCLK
GPIO_19	I/O	RESUME	SMBCLK
GPIO_20	I/O	RESUME	SMBDAT

Main Clock Generator

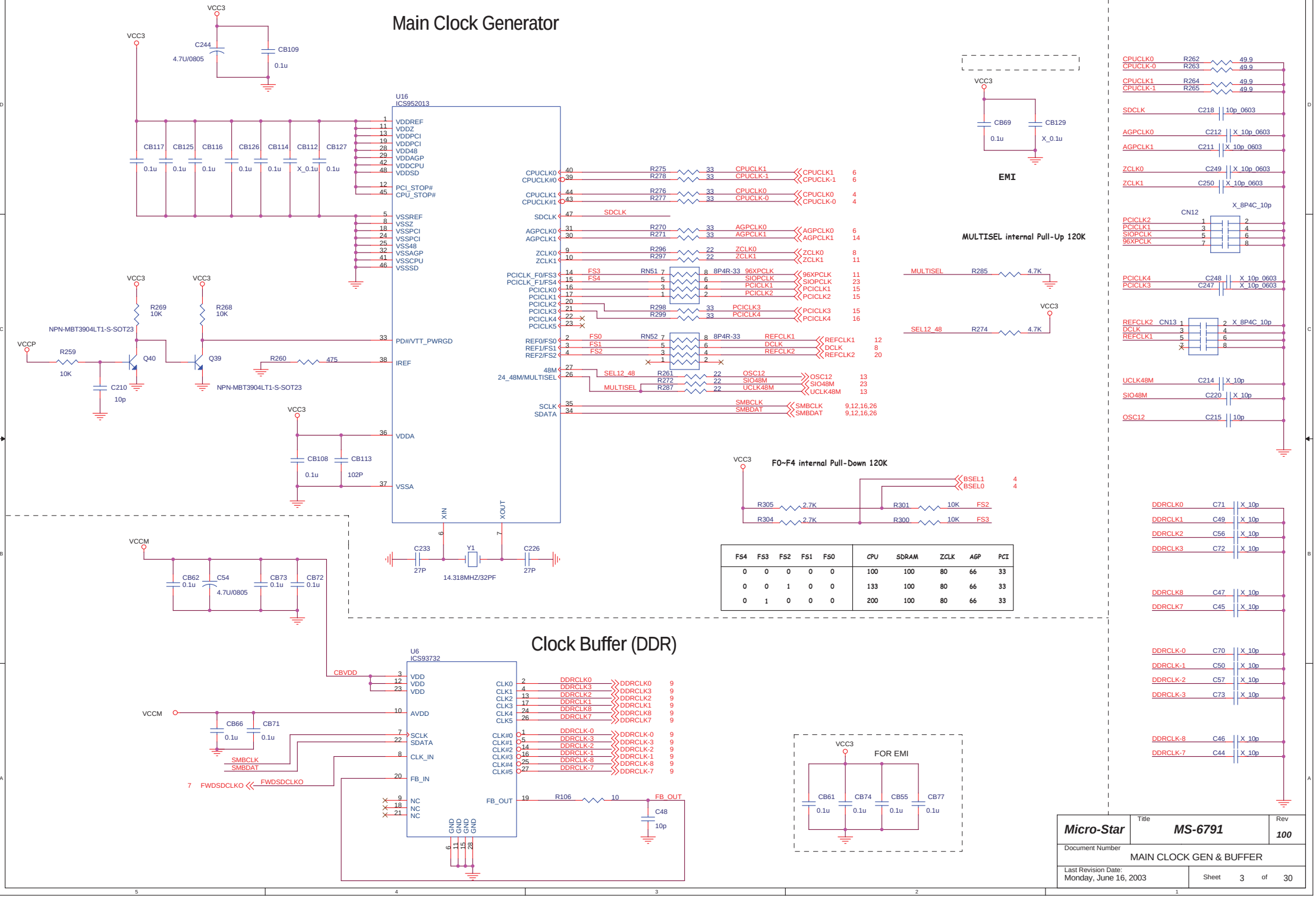

FS4	FS3	FS2	FS1	FS0	CPU	SDRAM	ZCLK	AGP	PCI
0	0	0	0	0	100	100	80	66	33
0	0	1	0	0	133	100	80	66	33
0	1	0	0	0	200	100	80	66	33

Micro-Star	Title: MS-6791	Rev: 100
Document Number: MAIN CLOCK GEN & BUFFER		
Last Revision Date: Monday, June 16, 2003	Sheet 3 of 30	

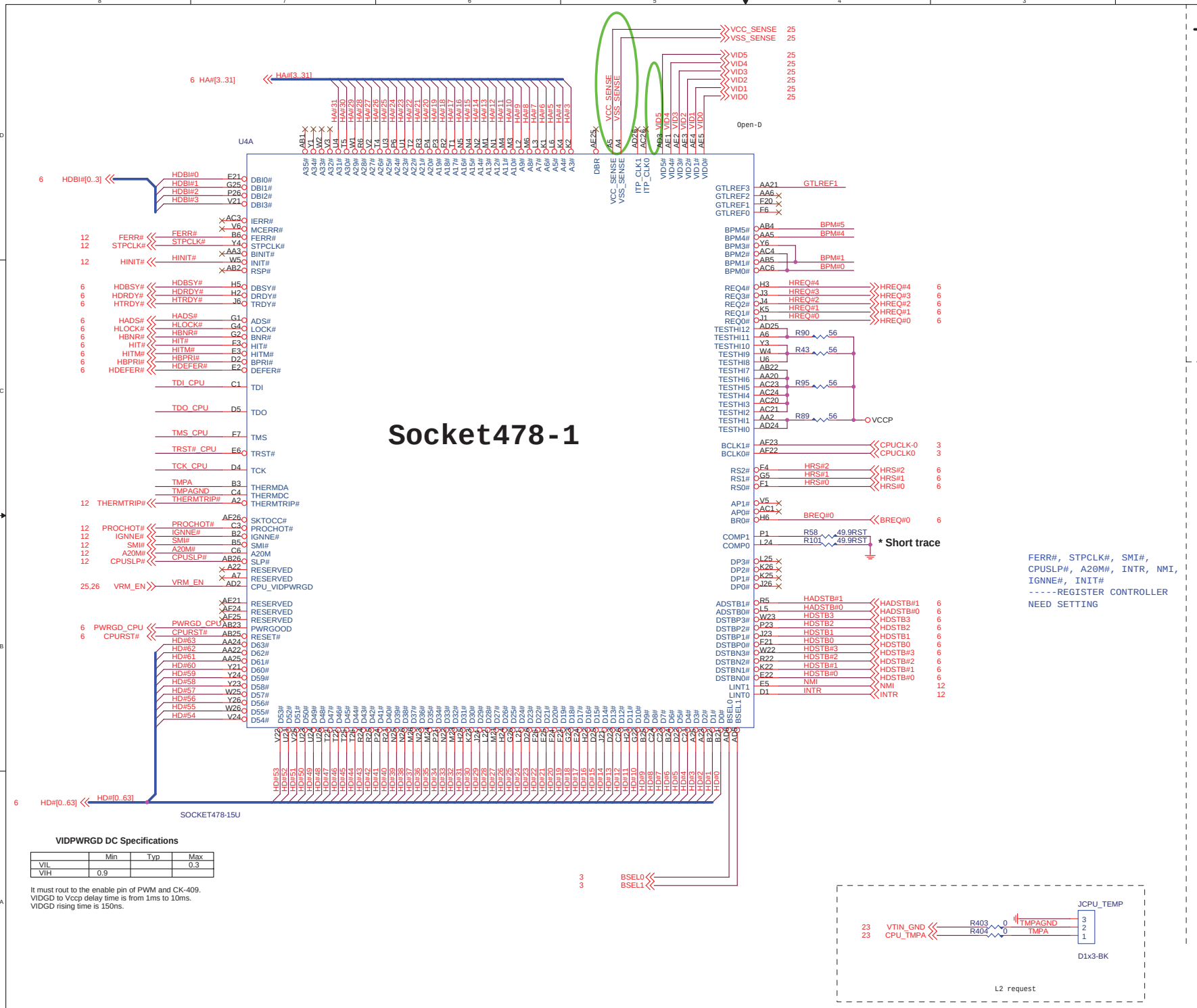

CPU GTL REFERNCE VOLTAGE BLOCK

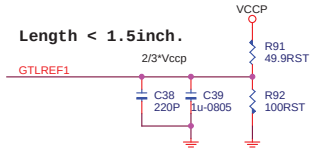

Every pin put one 220pF cap near it.
Trace Width 15mils, Space 15mils.
Keep the voltage dividers within 1.5 inches of the first GTLREF Pin

CPU STRAPPING RESISTORS

CLOSED TO SOCKET478

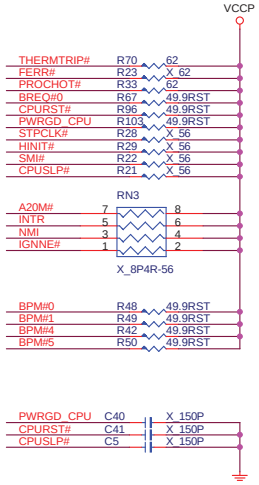

CPU ITP BLOCK

CLOSED TO SOCKET478

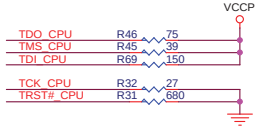

VIDPWRGD DC Specifications

	Min	Typ	Max
VIL			0.3
VIH	0.9		

It must rout to the enable pin of PWM and CK-409.
VIDGD to Vccp delay time is from 1ms to 10ms.
VIDGD rising time is 150ns.

Micro-Star	Title: MS-6791	Rev: 100
Document Number: mPGA478 CPU-1		
Last Revision Date: Monday, June 16, 2003	Sheet 4 of 30	

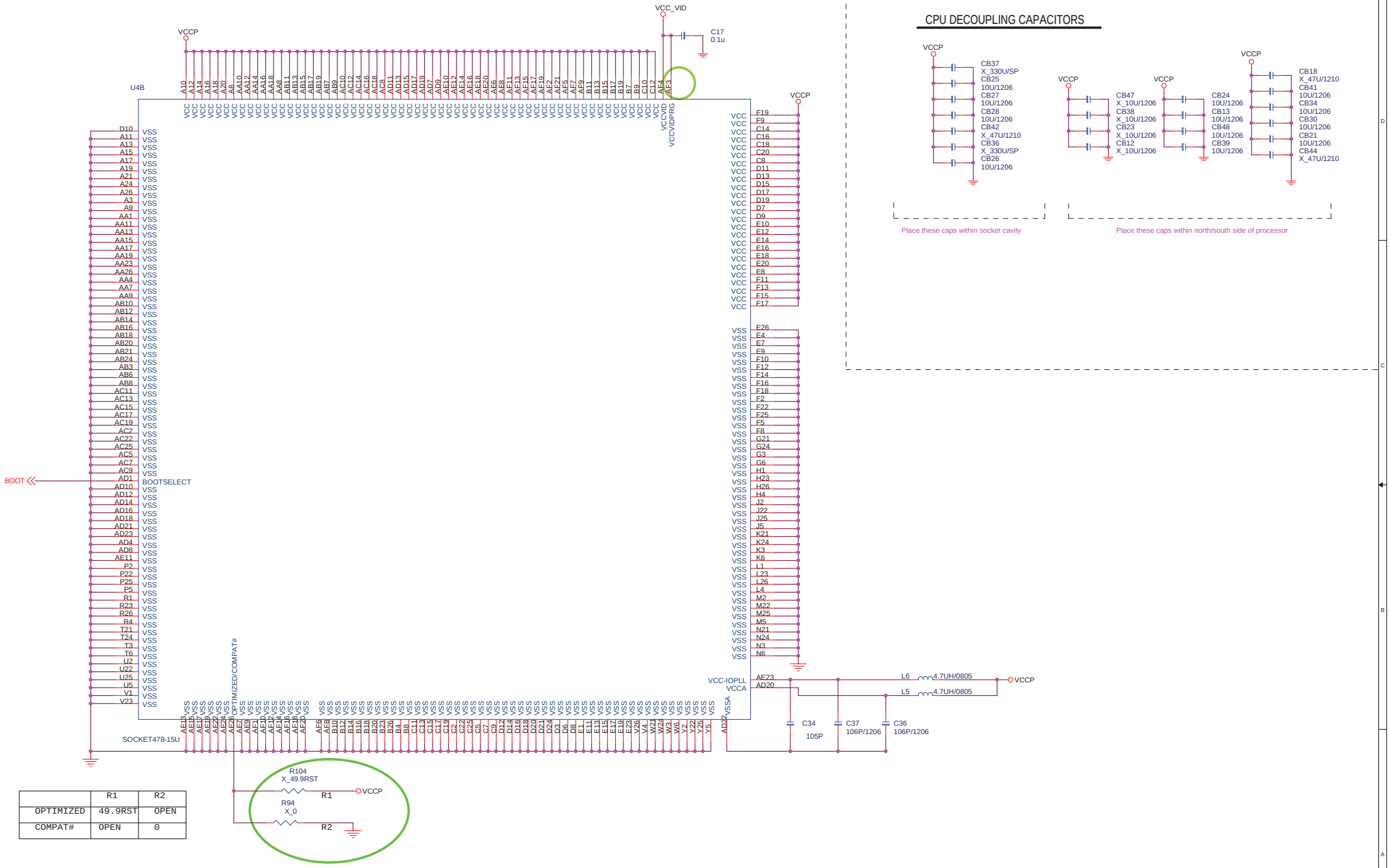

	R1	R2
OPTIMIZED	49.9RST	OPEN
COMPAT#	OPEN	0

Micro-Star	Title: MS-6791	Rev: 100
Document Number: mPGA478 CPU-2		
Last Revision Date: Monday, June 16, 2003	Sheet 5 of 30	

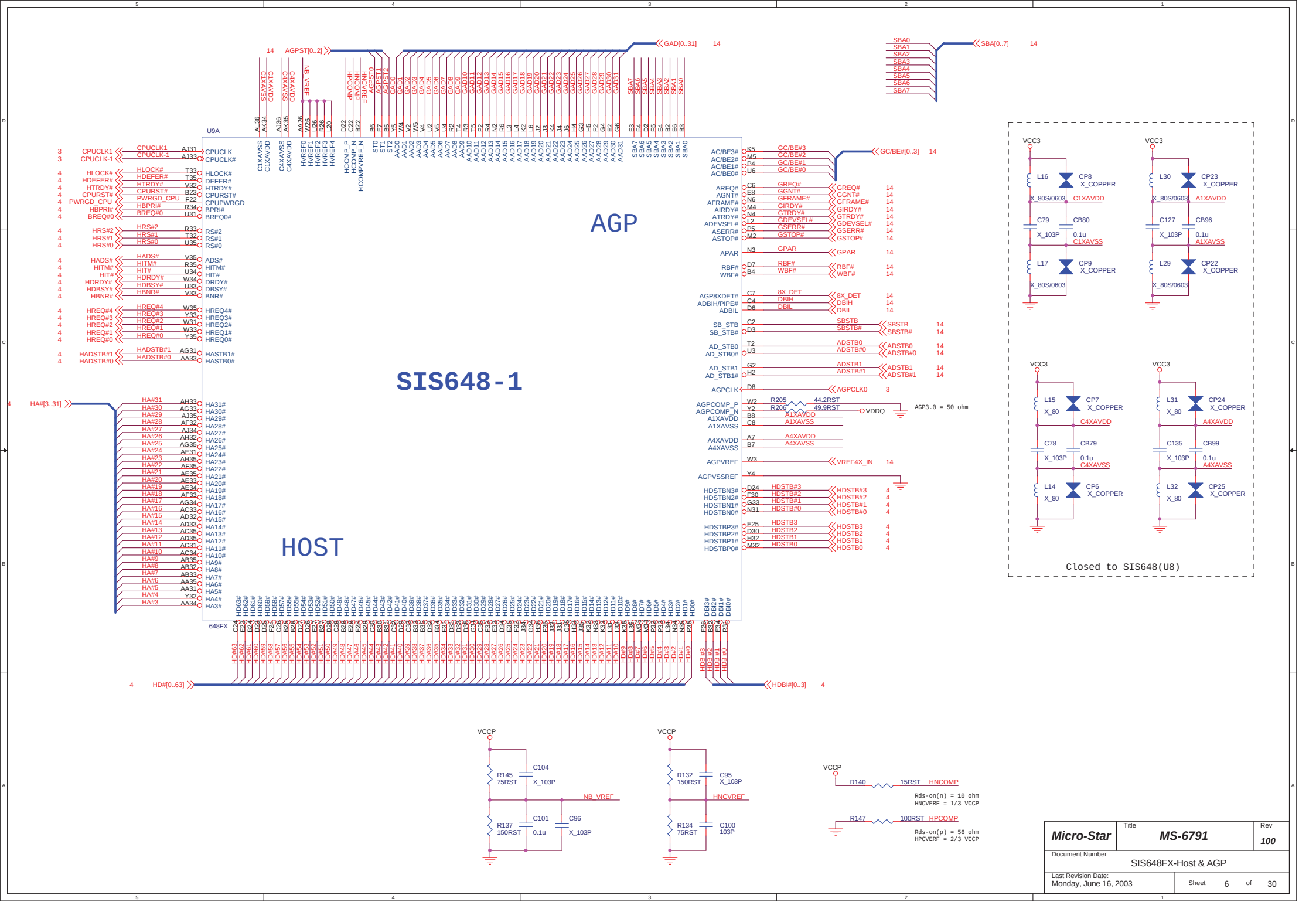

Micro-Star	Title: MS-6791	Rev: 100
Document Number: SIS648FX-Host & AGP		
Last Revision Date: Monday, June 16, 2003	Sheet 6 of 30	

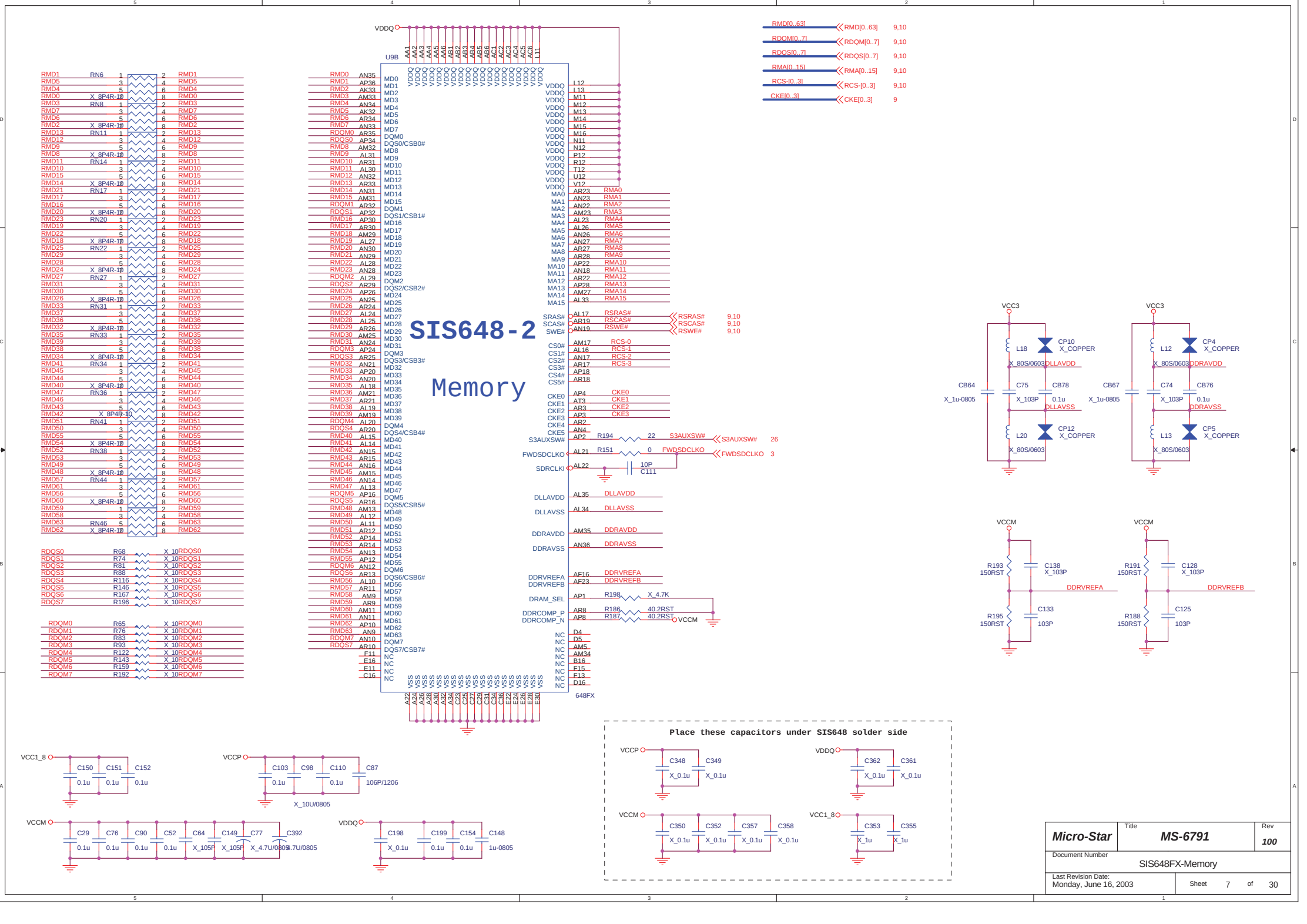
SIS648-2
Memory
U9B
648FX
VDDQ
RMD[0..63] RMD[0..63] 9,10
RDQM[0..7] RDQM[0..7] 9,10
RDQS[0..7] RDQS[0..7] 9,10
RMA[0..15] RMA[0..15] 9,10
RCS-[0..3] RCS-[0..3] 9,10
CKE[0..3] CKE[0..3] 9
RSRAS# 9,10
RSCAS# 9,10
RSWE# 9,10
S3AUXSW# 26
FWDSDCLKO 3
VCC3
CP10 X_COPPER
CP12 X_COPPER
CP4 X_COPPER
CP5 X_COPPER
DLLAVDD
DLLAVSS
DDRAVDD
DDRAVSS
VCCM
DDRVREFA
DDRVREFB
Place these capacitors under SIS648 solder side
VCC1_8
VCCP
VDDQ
VCCM
Micro-Star
Title
MS-6791
Rev
100
Document Number
SIS648FX-Memory
Last Revision Date:
Monday, June 16, 2003
Sheet 7 of 30

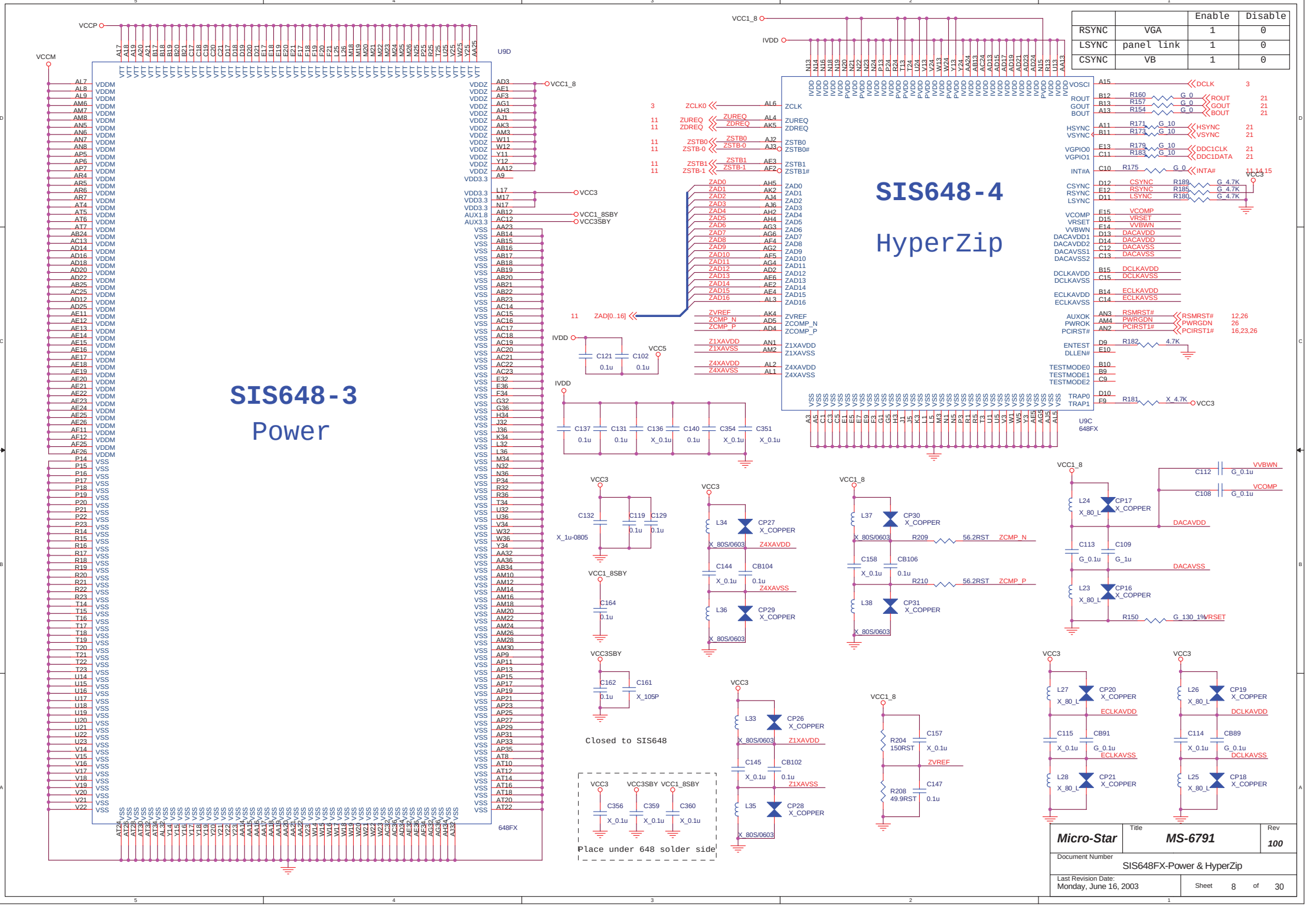

		Enable	Disable
RSYNC	VGA	1	0
LSYNC	panel link	1	0
CSYNC	VB	1	0

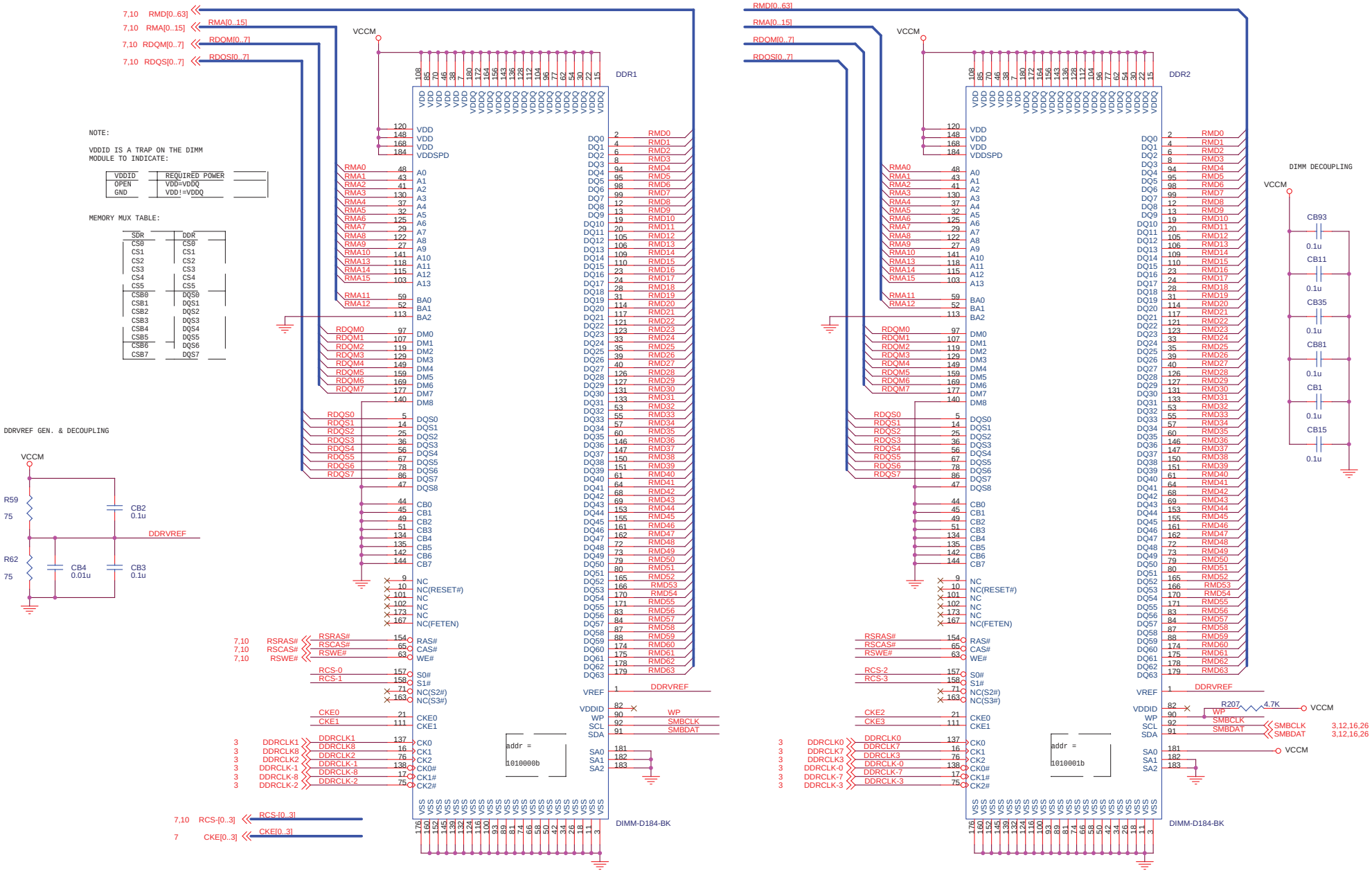

Micro-Star	Title: MS-6791		Rev: 100
Document Number: DDR1 & DDR2			
Last Revision Date: Monday, June 16, 2003		Sheet 9 of 30	

DDR TERMINATOR

SSTL-2 Termination Resistors

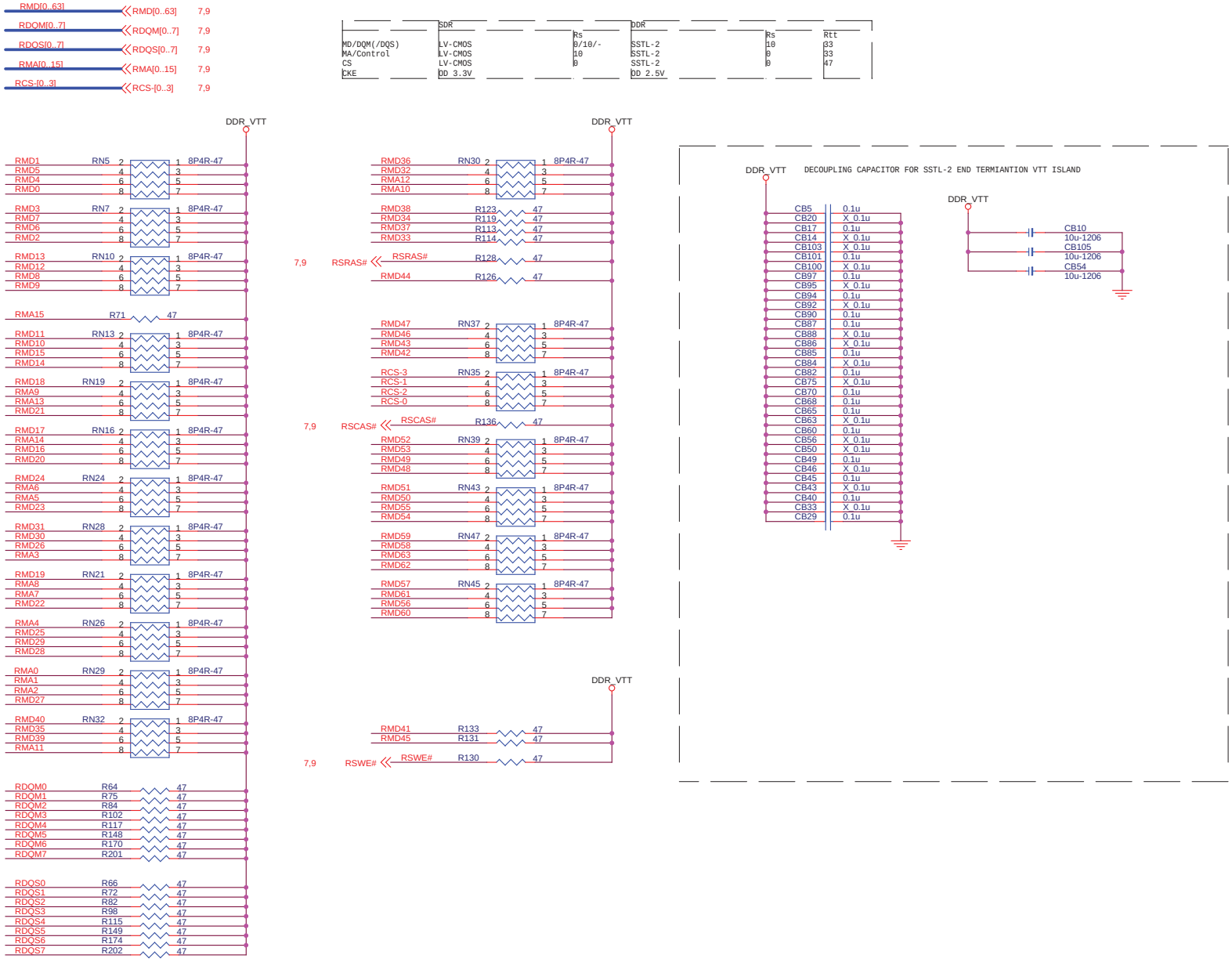

	SDR	Rs	DDR	Rs	Rtt
MD/DQM(/DQS)	LV-CMOS	0/10/-	SSTL-2	10	33
MA/Control	LV-CMOS	10	SSTL-2	0	33
CS	LV-CMOS	0	SSTL-2	0	47
CKE	DD 3.3V		DD 2.5V		

Micro-Star	Title MS-6791	Rev 100
Document Number	DDR TERMINATOR	
Last Revision Date: Monday, June 16, 2003	Sheet 10 of 30	

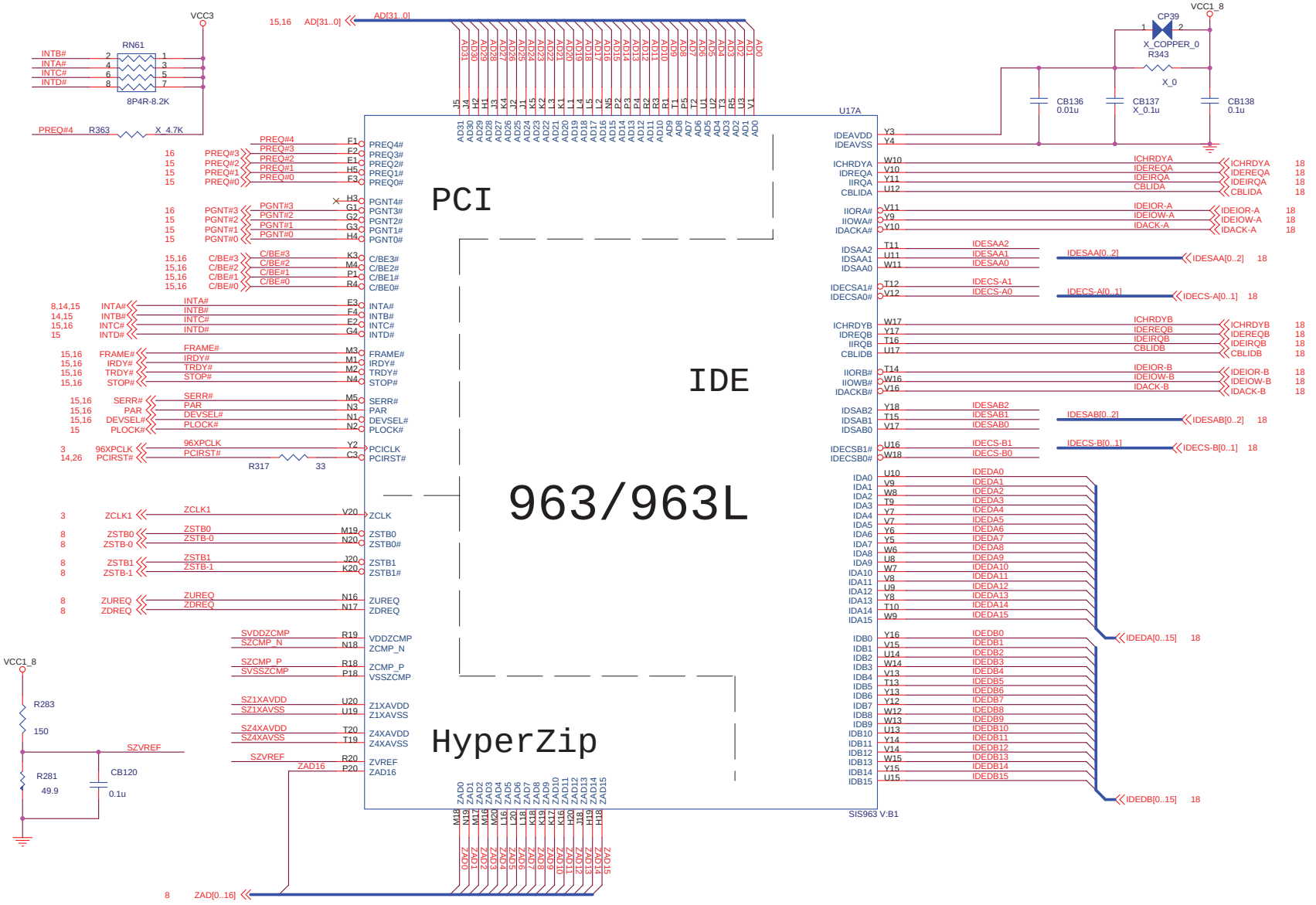

Micro-Star	Title: MS-6791	Rev: 100
Document Number: SIS963-1		
Last Revision Date: Monday, June 16, 2003	Sheet 11 of 30	

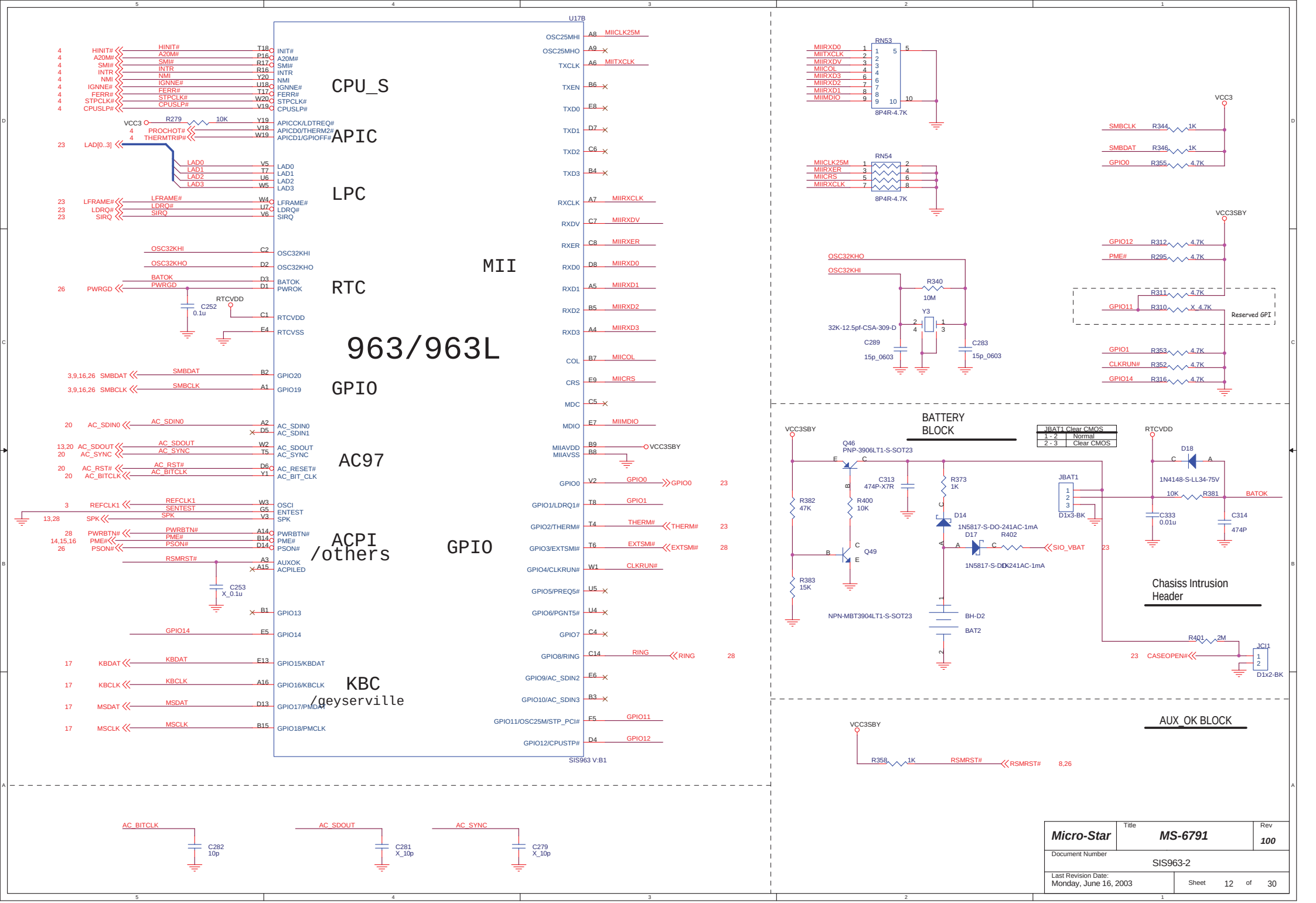
U17B
CPU_S
APIC
LPC
RTC
963/963L
GPIO
AC97
ACPI /others
KBC /geyserville
MII
GPIO
HINIT# A20M# SMI# INTR NMI IGNNE# FERR# STPCLK# CPUSLP#
VCC3 R279 10K PROCHOT# THERMTRIP#
LAD[0..3] LAD0 LAD1 LAD2 LAD3
LFRAME# LDRQ# SIRQ
OSC32KHI OSC32KHO BATOK PWRGD
PWRGD C252 0.1u RTCVDD
SMBDAT SMBCLK
AC_SDIN0 AC_SDOUT AC_SYNC AC_RST# AC_BITCLK
REFCLK1 SENTEST SPK
PWRBTN# PME# PSON# RSMRST#
C253 X_0.1u
GPIO14
KBDAT KBCLK MSDAT MSCLK
INIT# A20M# SMI# INTR NMI IGNNE# FERR# STPCLK# CPUSLP#
APICCK/LDTREQ# APICD0/THERM2# APICD1/GPIOFF#
LAD0 LAD1 LAD2 LAD3
LFRAME# LDRQ# SIRQ
OSC32KHI OSC32KHO BATOK PWROK RTCVDD RTCVSS
GPIO20 GPIO19
AC_SDIN0 AC_SDIN1 AC_SDOUT AC_SYNC AC_RESET# AC_BIT_CLK
OSCI ENTEST SPK PWRBTN# PME# PSON# AUXOK ACPILED
GPIO13 GPIO14
GPIO15/KBDAT GPIO16/KBCLK GPIO17/PMDAT GPIO18/PMCLK
OSC25MHI OSC25MHO TXCLK TXEN TXD0 TXD1 TXD2 TXD3
RXCLK RXDV RXER RXD0 RXD1 RXD2 RXD3
COL CRS MDC MDIO
MIIAVDD MIIAVSS
GPIO0 GPIO1/LDRQ1# GPIO2/THERM# GPIO3/EXTSMI# GPIO4/CLKRUN# GPIO5/PREQ5# GPIO6/PGNT5# GPIO7 GPIO8/RING GPIO9/AC_SDIN2 GPIO10/AC_SDIN3 GPIO11/OSC25M/STP_PCI# GPIO12/CPUSTP#
MIICLK25M MIITXCLK MIIRXCLK MIIRXDV MIIRXER MIIRXD0 MIIRXD1 MIIRXD2 MIIRXD3 MIICOL MIICRS MIIMDIO
VCC3SBY
GPIO0 GPIO1 THERM# EXTSMI# CLKRUN# RING GPIO11 GPIO12
SIS963 V:B1
AC_BITCLK C282 10p
AC_SDOUT C281 X_10p
AC_SYNC C279 X_10p
RN53 8P4R-4.7K
RN54 8P4R-4.7K
MIIRXD0 MIITXCLK MIIRXDV MIICOL MIIRXD3 MIIRXD2 MIIRXD1 MIIMDIO
MIICLK25M MIIRXER MIICRS MIIRXCLK
VCC3
SMBCLK R344 1K
SMBDAT R346 1K
GPIO0 R355 4.7K
VCC3SBY
GPIO12 R312 4.7K
PME# R295 4.7K
GPIO11 R310 X_4.7K
R311 4.7K
Reserved GPI
GPIO1 R353 4.7K
CLKRUN# R352 4.7K
GPIO14 R316 4.7K
OSC32KHO OSC32KHI
R340 10M
Y3 32K-12.5pf-CSA-309-D
C289 15p_0603
C283 15p_0603
BATTERY BLOCK
JBAT1 Clear CMOS
1 - 2 Normal
2 - 3 Clear CMOS
VCC3SBY
Q46 PNP-3906LT1-S-SOT23
C313 474P-X7R
R373 1K
R382 47K
R400 10K
D14 1N5817-S-DO-241AC-1mA
D17 1N5817-S-DO-241AC-1mA
R402
Q49 NPN-MBT3904LT1-S-SOT23
R383 15K
BH-D2 BAT2
JBAT1 D1x3-BK
SIO_VBAT
RTCVDD
D18 1N4148-S-LL34-75V
10K R381 BATOK
C333 0.01u
C314 474P
Chasiss Intrusion Header
R401 2M
CASEOPEN#
JCI1 D1x2-BK
AUX_OK BLOCK
VCC3SBY
R358 1K RSMRST#
Micro-Star
Title MS-6791
Rev 100
Document Number SIS963-2
Last Revision Date: Monday, June 16, 2003
Sheet 12 of 30

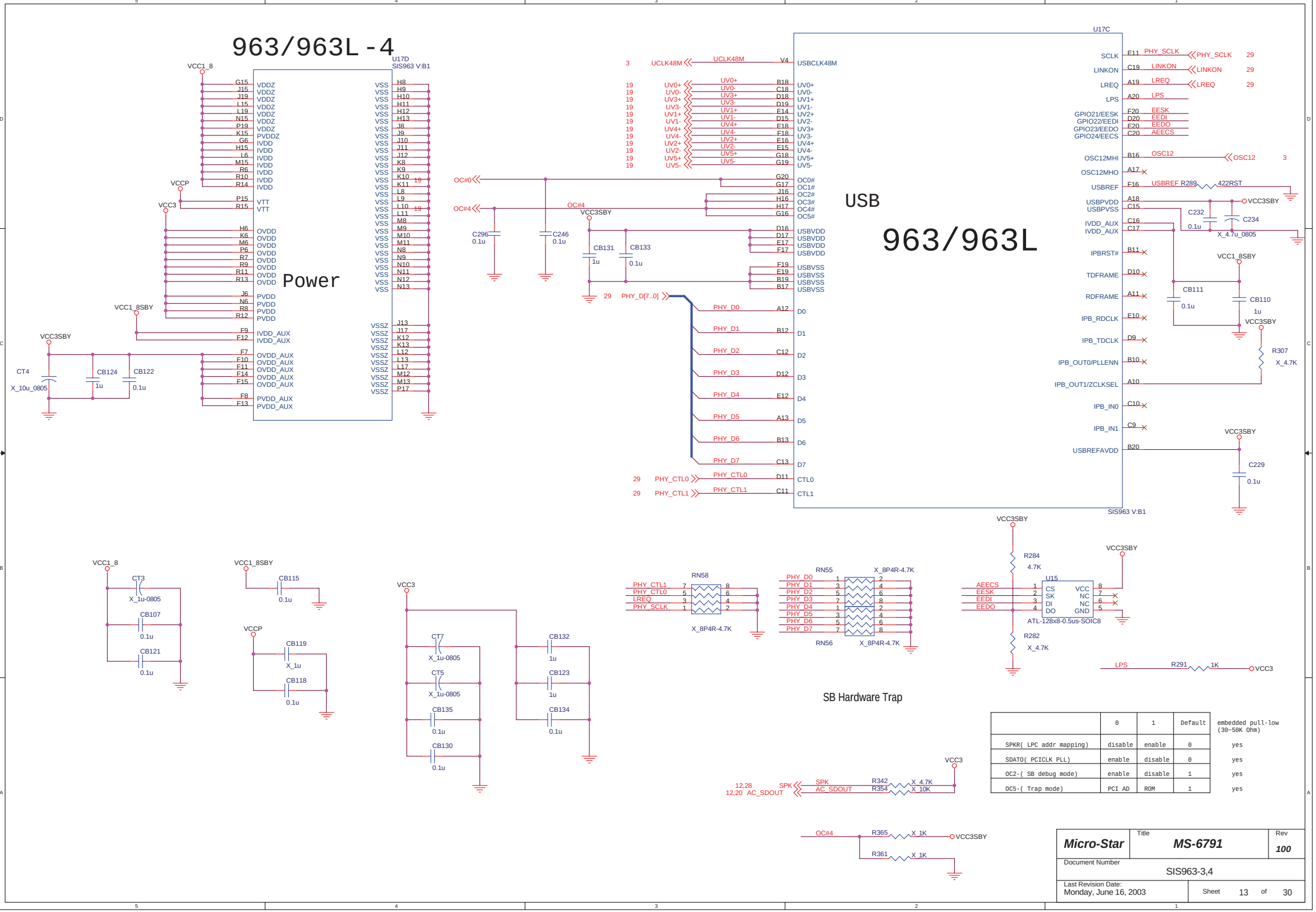

	0	1	Default	embedded pull-low (30~50K Ohm)
SPKR(LPC addr mapping)	disable	enable	0	yes
SDAT0(PCICLK PLL)	enable	disable	0	yes
OC2-(SB debug mode)	enable	disable	1	yes
OC5-(Trap mode)	PCI AD	ROM	1	yes

Micro-Star	Title: MS-6791	Rev: 100
Document Number: SIS963-3,4		
Last Revision Date: Monday, June 16, 2003	Sheet 13 of 30	

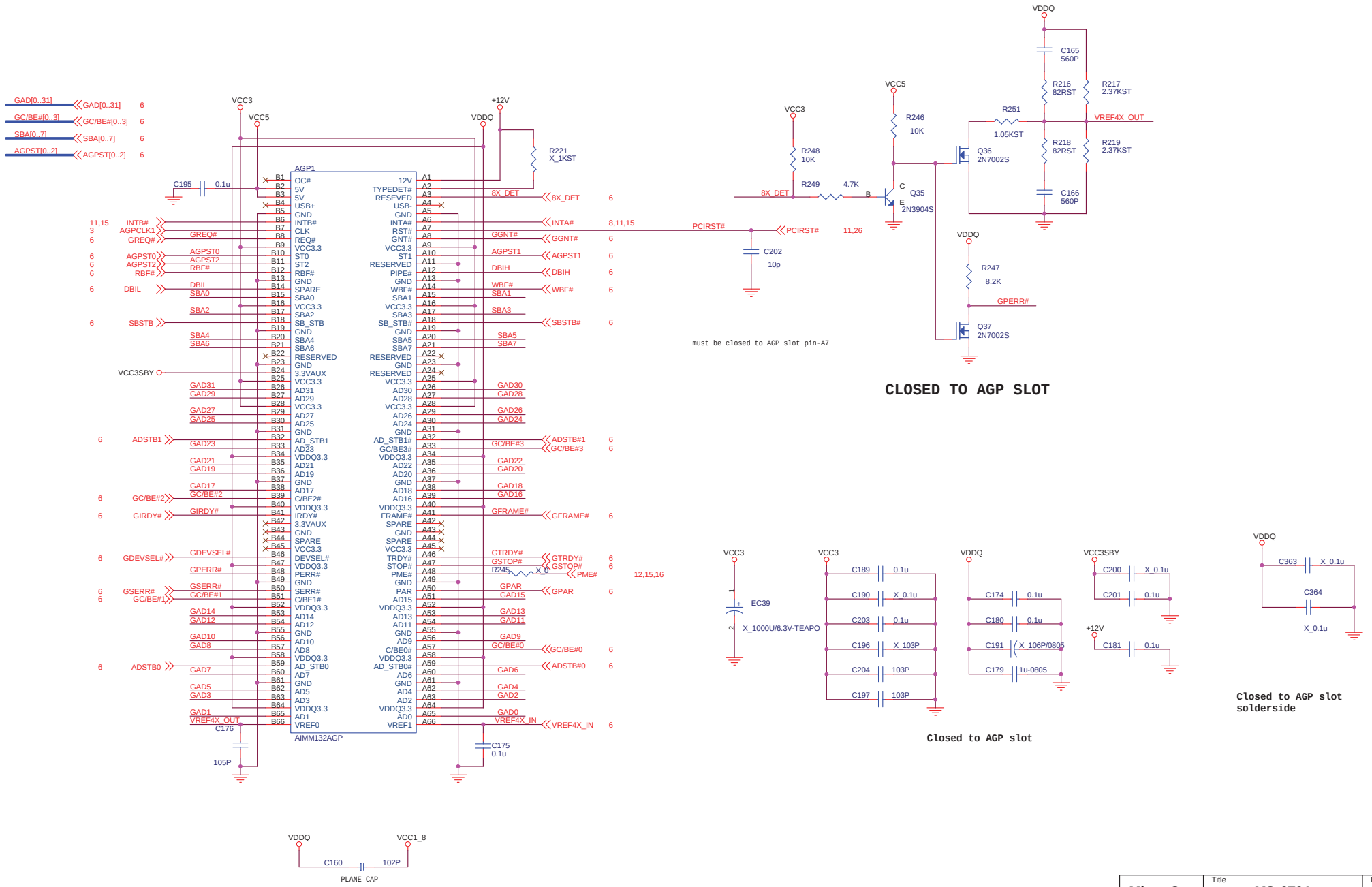

Micro-Star	Title: MS-6791	Rev: 100
Document Number: AGP Slot & Pull up/dn resistor		
Last Revision Date: Monday, June 16, 2003	Sheet 14 of 30	

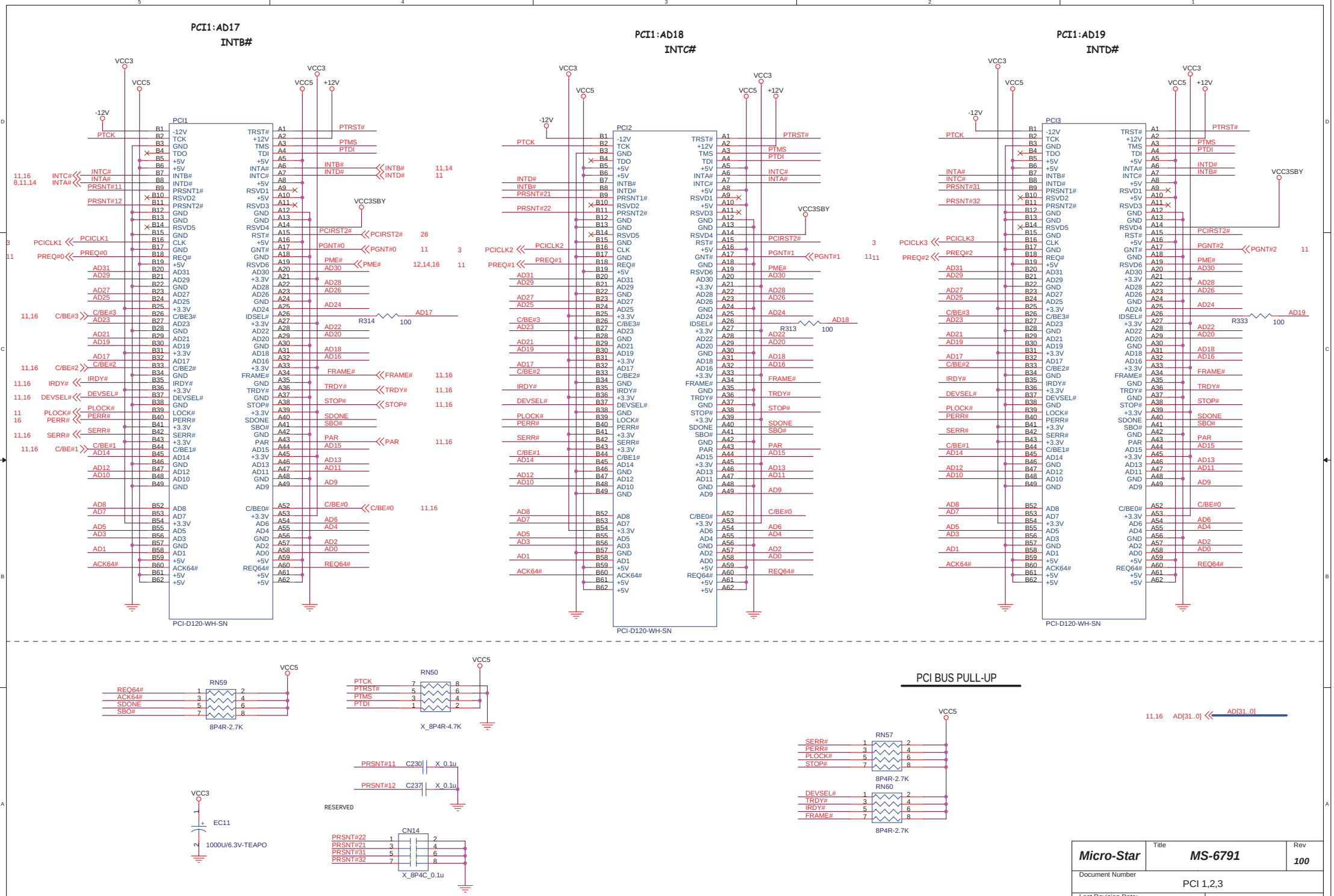

Micro-Star	Title: MS-6791	Rev: 100
Document Number: PCI 1,2,3		
Last Revision Date: Monday, June 16, 2003	Sheet 15 of 30	

PCI LAN RTL8100C

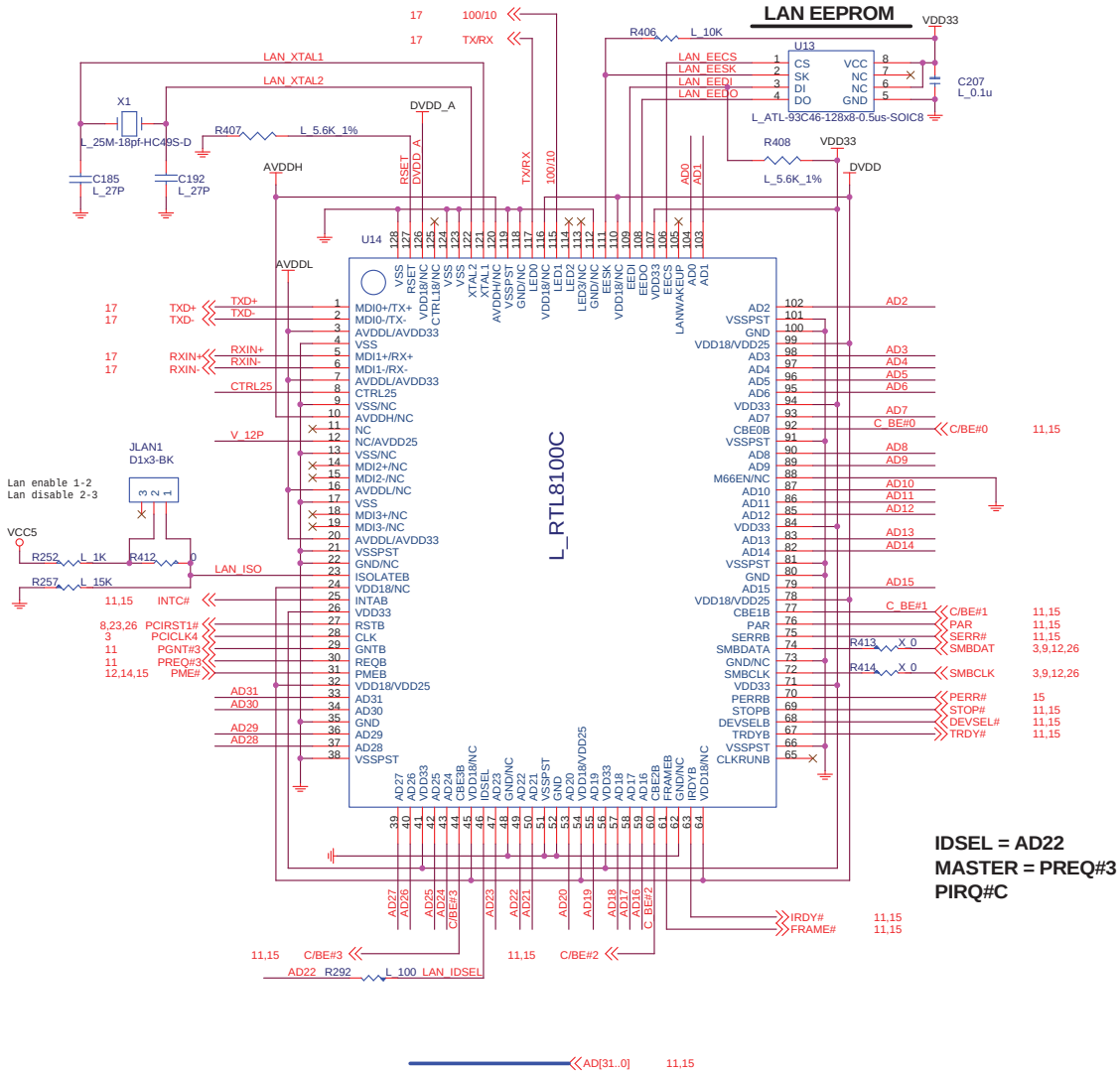

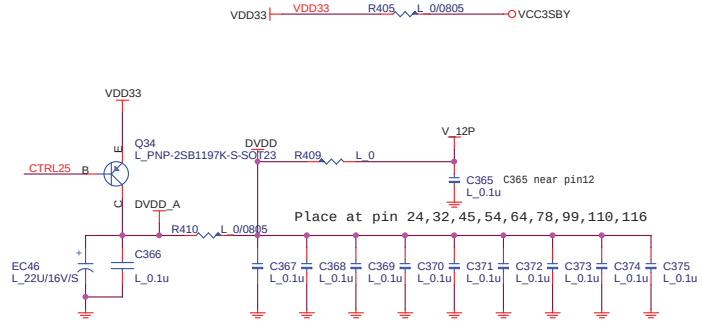

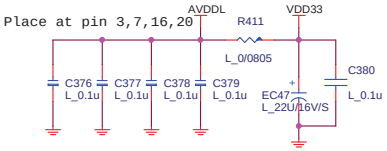

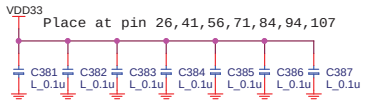

	DVDD	DVDDA	AVDDL	AVDDH	V-12P
8100C	2.5V	2.5V	3.3V	X	2.5V

Micro-Star	Title: MS-6791	Rev: 100
Document Number: RealTek 8100C		
Last Revision Date: Monday, June 16, 2003	Sheet 16 of 30	

KEYBOARD/MOUSE PORTS

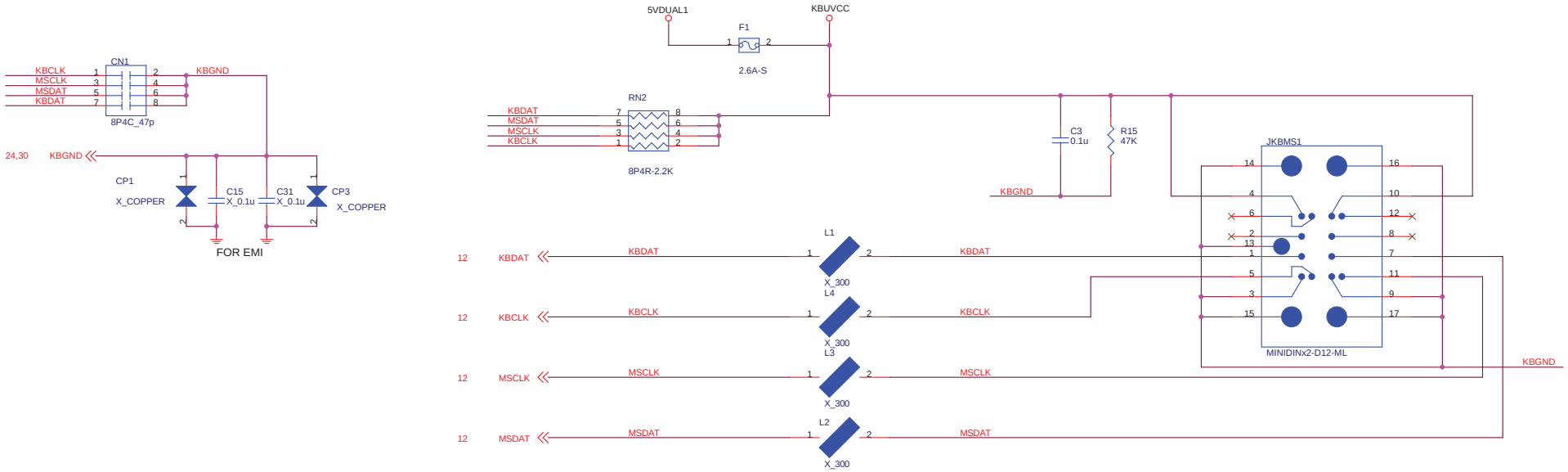

RJ45 CONNECTOR

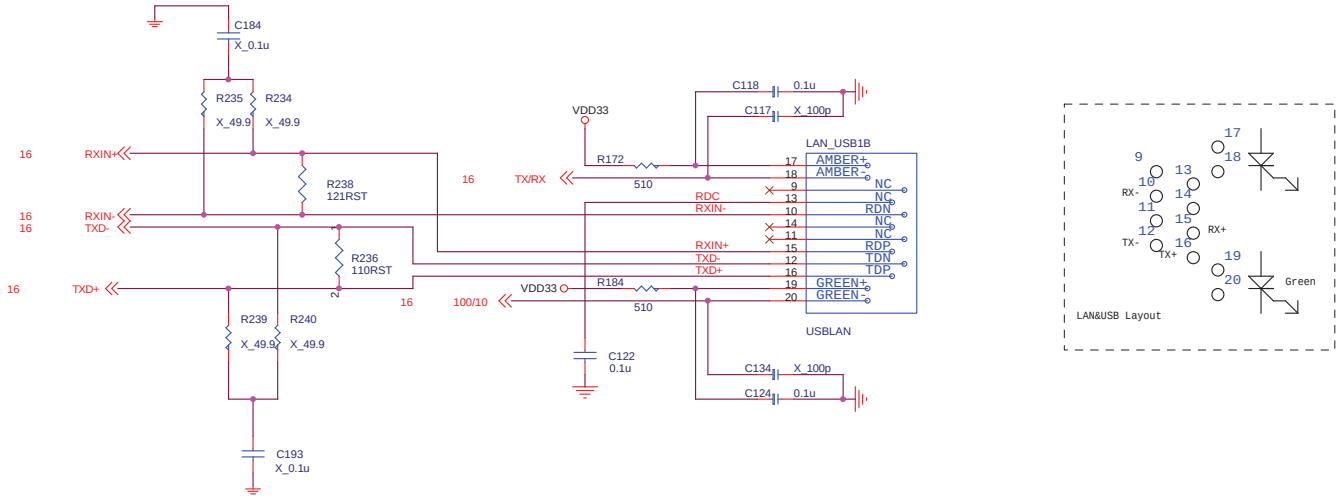

PLACE THESE COMPNENTS NEAR REALTEK
8100C

Micro-Star	Title: MS-6791	Rev: 100
Document Number: RJ45 & PS/2		
Last Revision Date: Monday, June 16, 2003	Sheet 17 of 30	

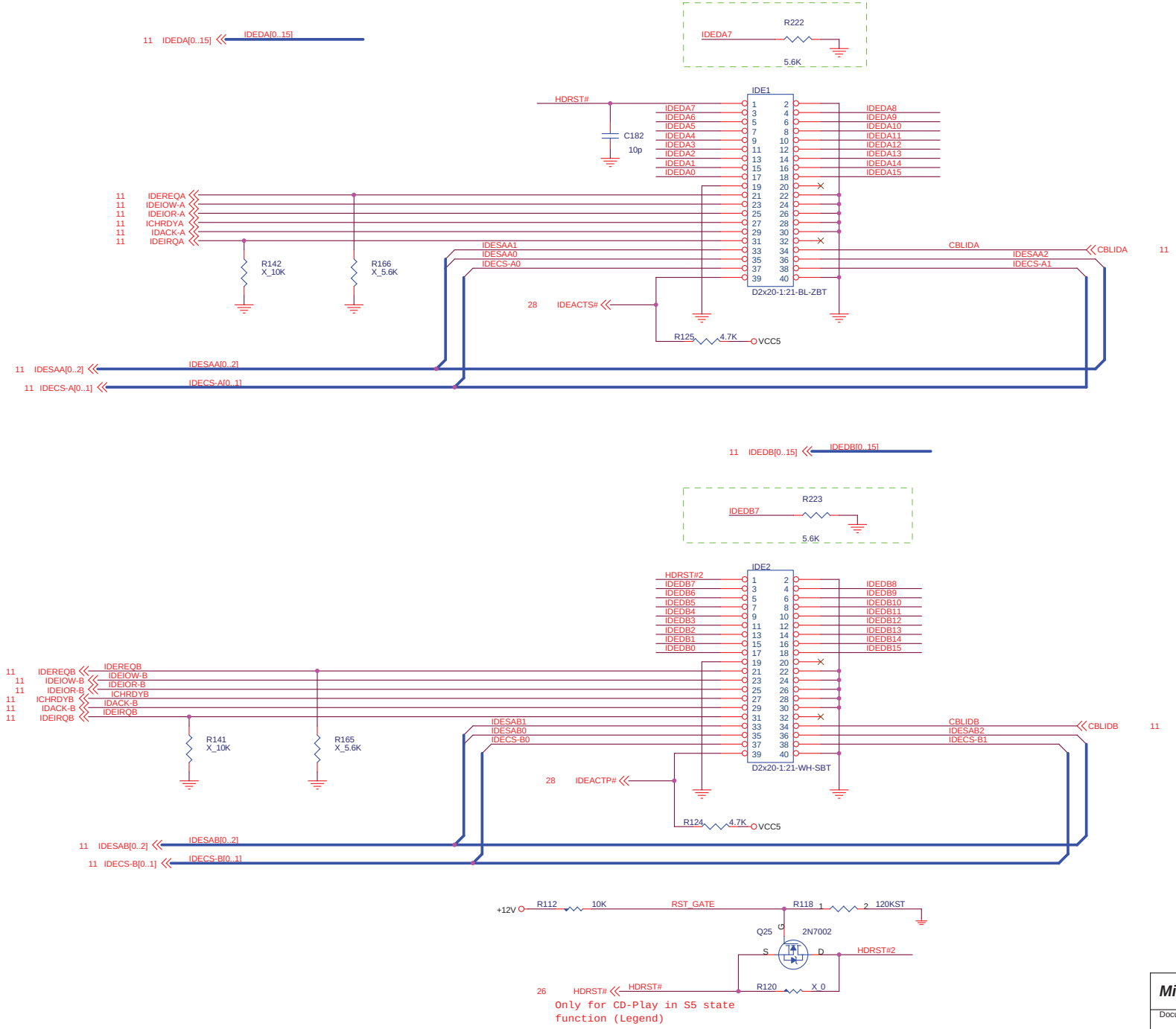

Micro-Star	Title: MS-6791	Rev: 100
Document Number: IDE CONNECTOR		
Last Revision Date: Monday, June 16, 2003	Sheet 18 of 30	

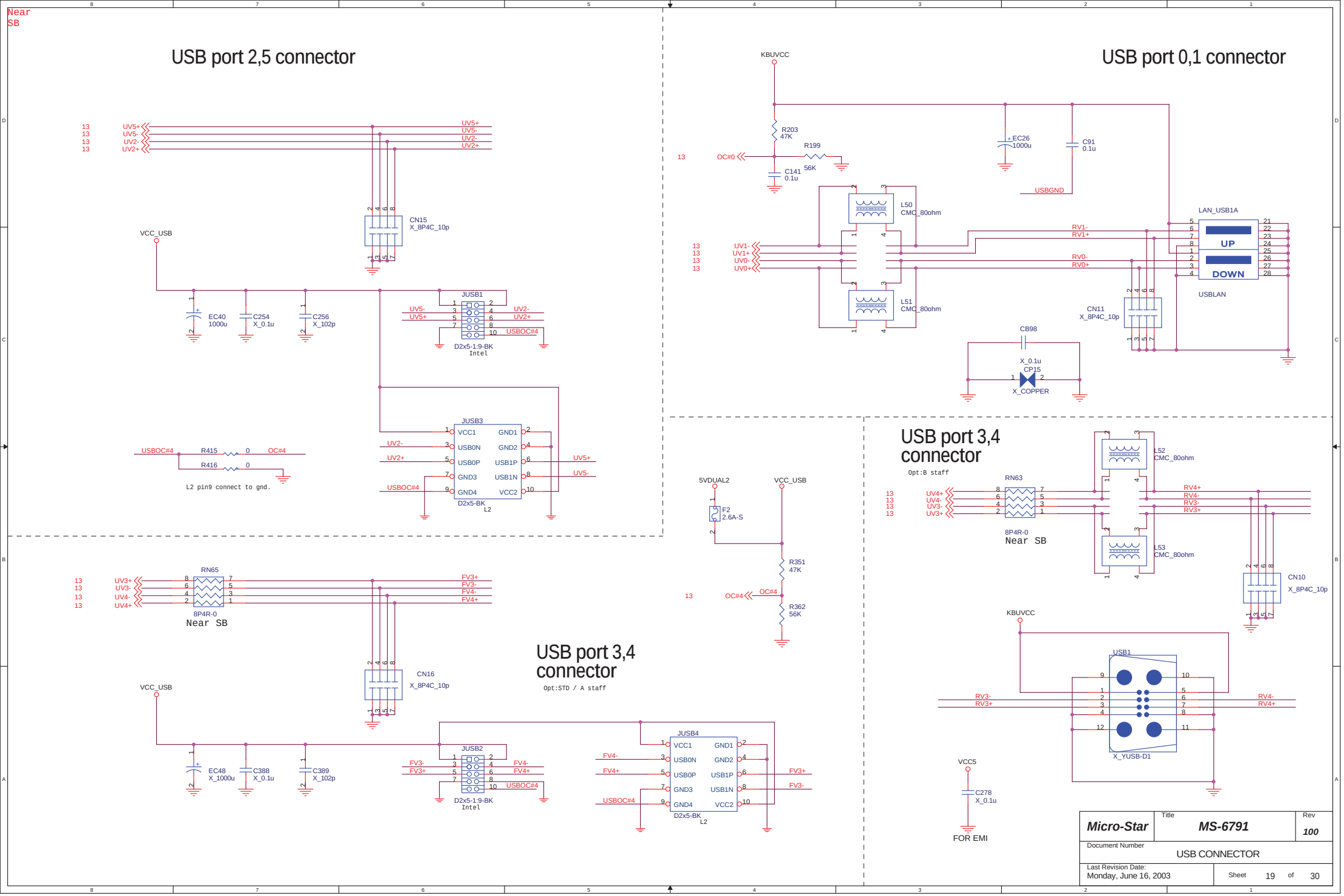
Near SB
USB port 2,5 connector
13 UV5+
13 UV5-
13 UV2-
13 UV2+
CN15
X_8P4C_10p
VCC_USB
EC40
1000u
C254
X_0.1u
C256
X_102p
JUSB1
D2x5-1:9-BK
Intel
USBOC#4
JUSB3
VCC1
USB0N
USB0P
GND3
GND4
GND1
GND2
USB1P
USB1N
VCC2
D2x5-BK
L2
R415 0 OC#4
R416 0
L2 pin9 connect to gnd.
USB port 0,1 connector
KBUVCC
R203
47K
R199
56K
C141
0.1u
13 OC#0
EC26
1000u
C91
0.1u
USBGND
L50
CMC_80ohm
L51
CMC_80ohm
13 UV1-
13 UV1+
13 UV0-
13 UV0+
RV1-
RV1+
RV0-
RV0+
LAN_USB1A
UP
DOWN
USBLAN
CN11
X_8P4C_10p
CB98
X_0.1u
CP15
X_COPPER
5VDUAL2
F2
2.6A-S
VCC_USB
R351
47K
13 OC#4
R362
56K
USB port 3,4 connector
Opt:B staff
RN63
8P4R-0
Near SB
13 UV4+
13 UV4-
13 UV3-
13 UV3+
L52
CMC_80ohm
L53
CMC_80ohm
RV4+
RV4-
RV3-
RV3+
CN10
X_8P4C_10p
KBUVCC
USB1
X_YUSB-D1
VCC5
C278
X_0.1u
FOR EMI
RN65
8P4R-0
Near SB
13 UV3+
13 UV3-
13 UV4-
13 UV4+
FV3+
FV3-
FV4-
FV4+
CN16
X_8P4C_10p
VCC_USB
EC48
X_1000u
C388
X_0.1u
C389
X_102p
JUSB2
D2x5-1:9-BK
Intel
USBOC#4
USB port 3,4 connector
Opt:STD / A staff
JUSB4
VCC1
USB0N
USB0P
GND3
GND4
GND1
GND2
USB1P
USB1N
VCC2
D2x5-BK
L2
Micro-Star
Title
MS-6791
Rev
100
Document Number
USB CONNECTOR
Last Revision Date:
Monday, June 16, 2003
Sheet 19 of 30

ALC650/655/202A AC97 CODEC

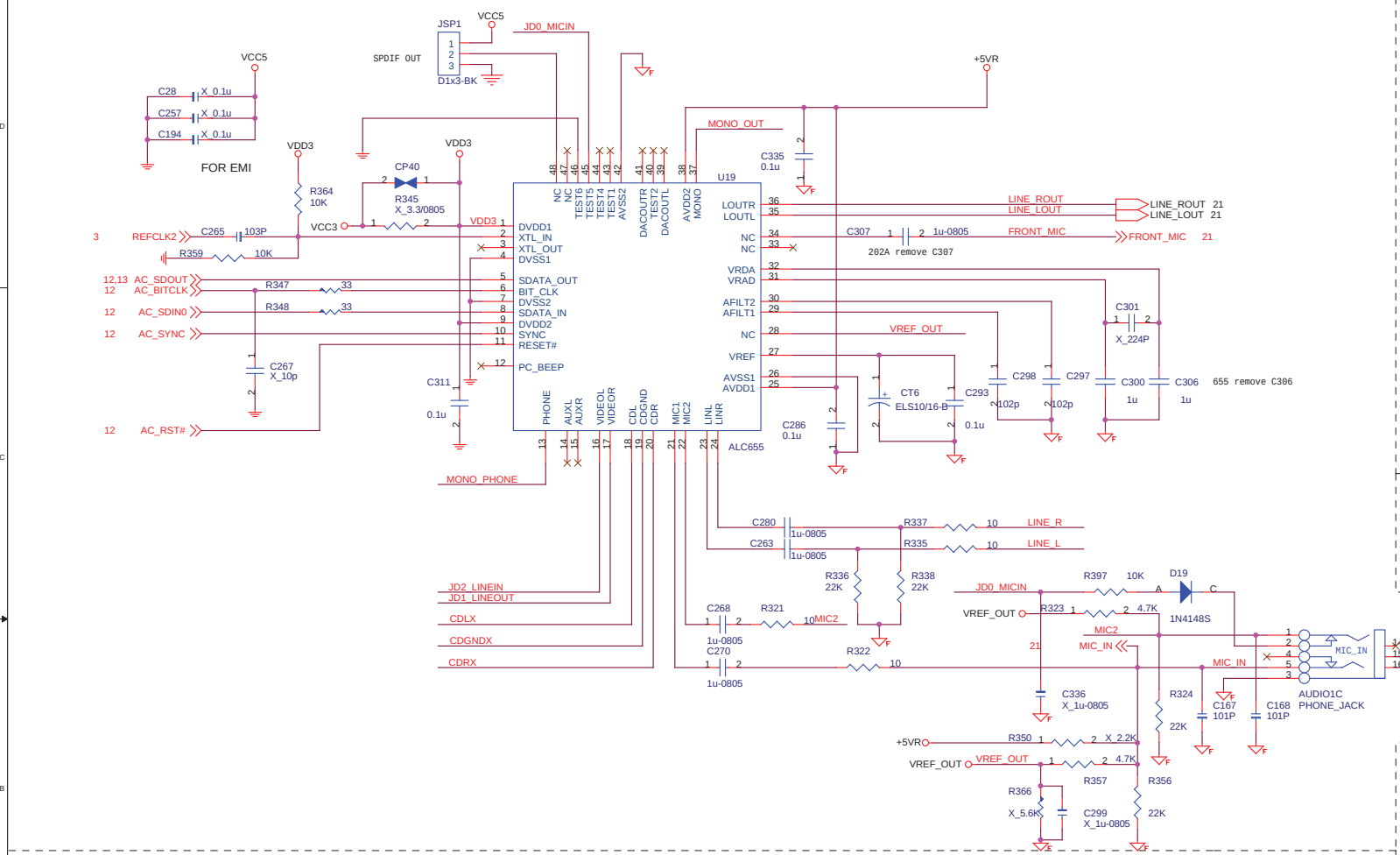

SPEAKER OUT JACK

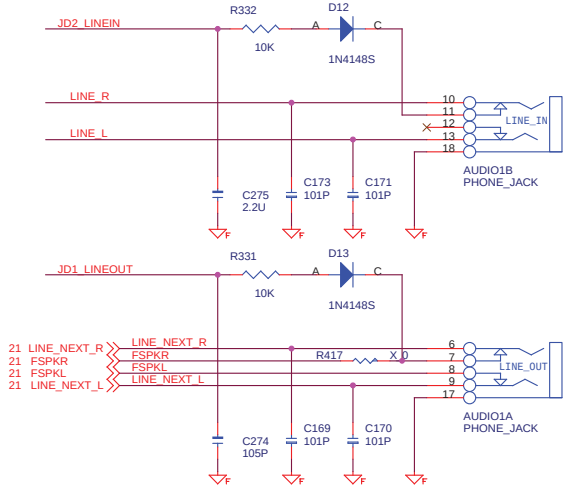

DECOUPLING CAPACITOR

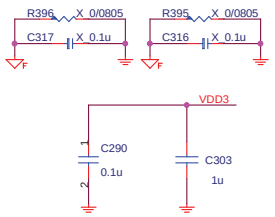

AUDIO CODE REGULATORS

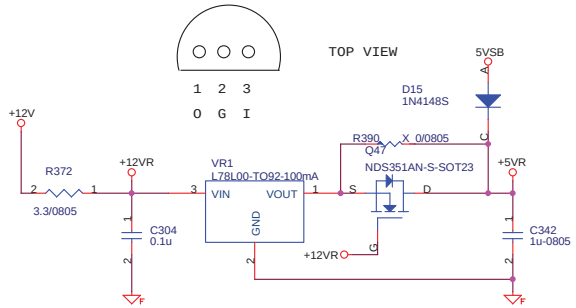

AUDIO CODE CD / AUX / MODEM IN HEADERS

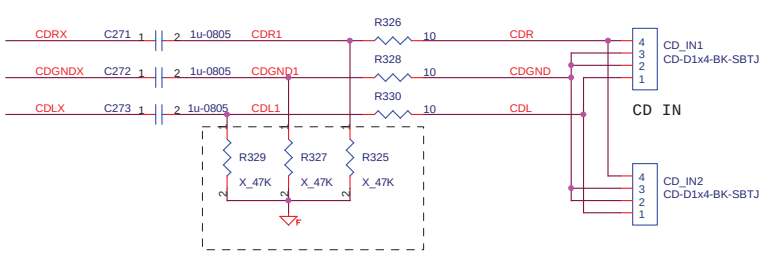

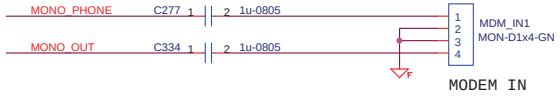

Micro-Star	Title: MS-6791	Rev: 100
Document Number: AC'97 CODEC		
Last Revision Date: Monday, June 16, 2003	Sheet 20 of 30	

VGA CONNECTOR

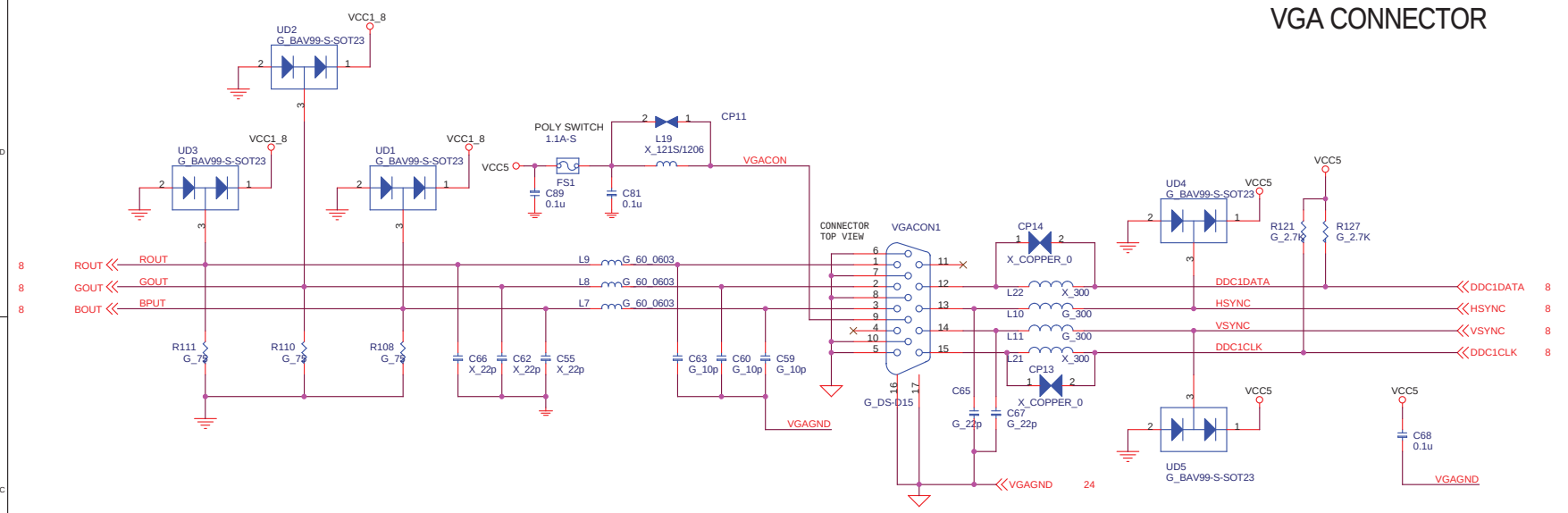

SPEAKER OUT CIRCUIT

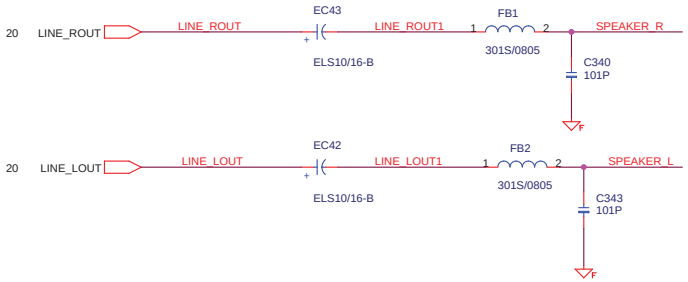

FOR MSI INTERNAL HEADER

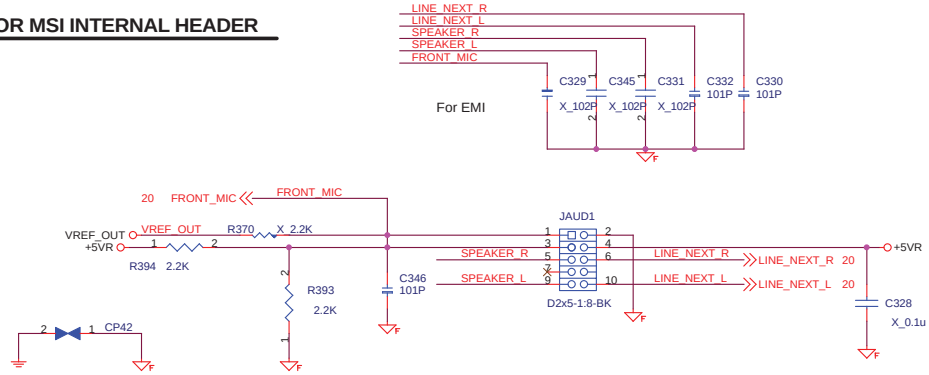

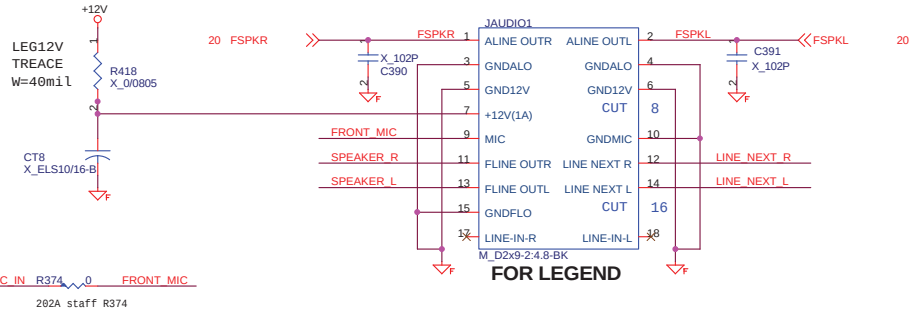

FOR LEGEND

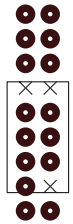

20 MIC_IN MIC_IN R374 0 FRONT_MIC

202A staff R374

Micro-Star	Title: MS-6791	Rev: 100
Document Number: AUDIO & VGA CONNECTOR		
Last Revision Date: Monday, June 16, 2003	Sheet 21 of 30	

CPU FAN

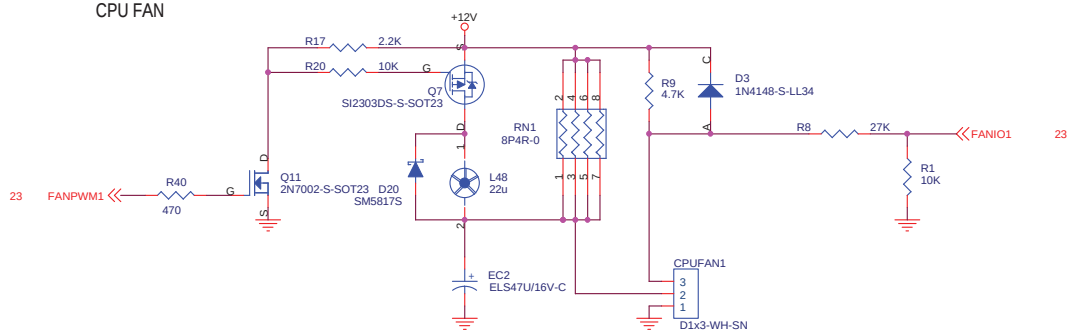

NB FAN

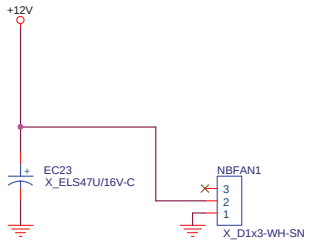

SYSTEM FAN

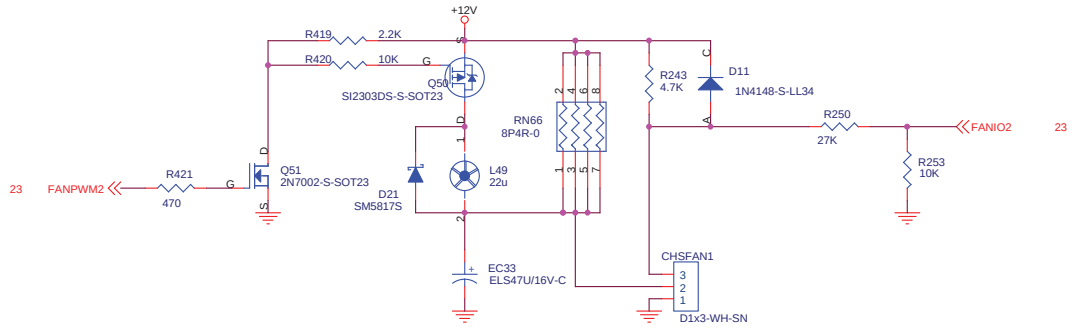

PWR FAN

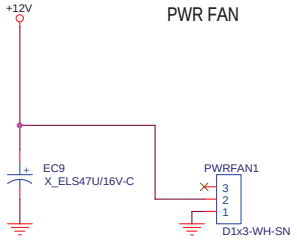

Micro-Star	Title: MS-6791	Rev: 100
Document Number: FAN		
Last Revision Date: Monday, June 16, 2003	Sheet 22 of 30	

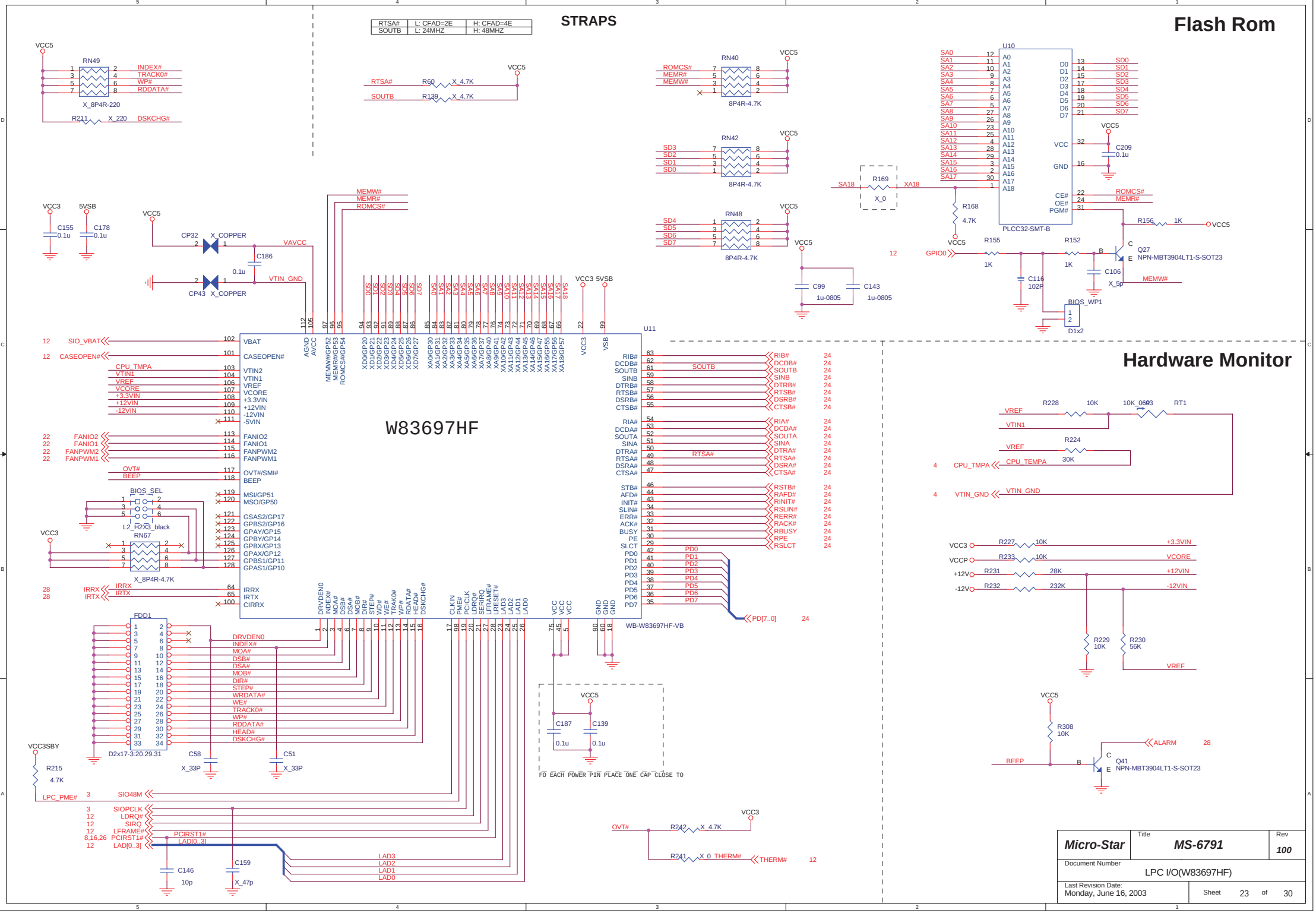
STRAPS
RTSA# L: CFAD=2E H: CFAD=4E
SOUTB L: 24MHZ H: 48MHZ
Flash Rom
Hardware Monitor
W83697HF
WB-W83697HF-VB
PLCC32-SMT-B
FDD1
D2x17-3:20.29.31
BIOS_SEL
BIOS_WP1
Q27 NPN-MBT3904LT1-S-SOT23
Q41 NPN-MBT3904LT1-S-SOT23
FO EACH POWER PIN PLACE ONE CAP CLOSE TO
Micro-Star
Title
MS-6791
Rev
100
Document Number
LPC I/O(W83697HF)
Last Revision Date:
Monday, June 16, 2003
Sheet 23 of 30

Parallel Port

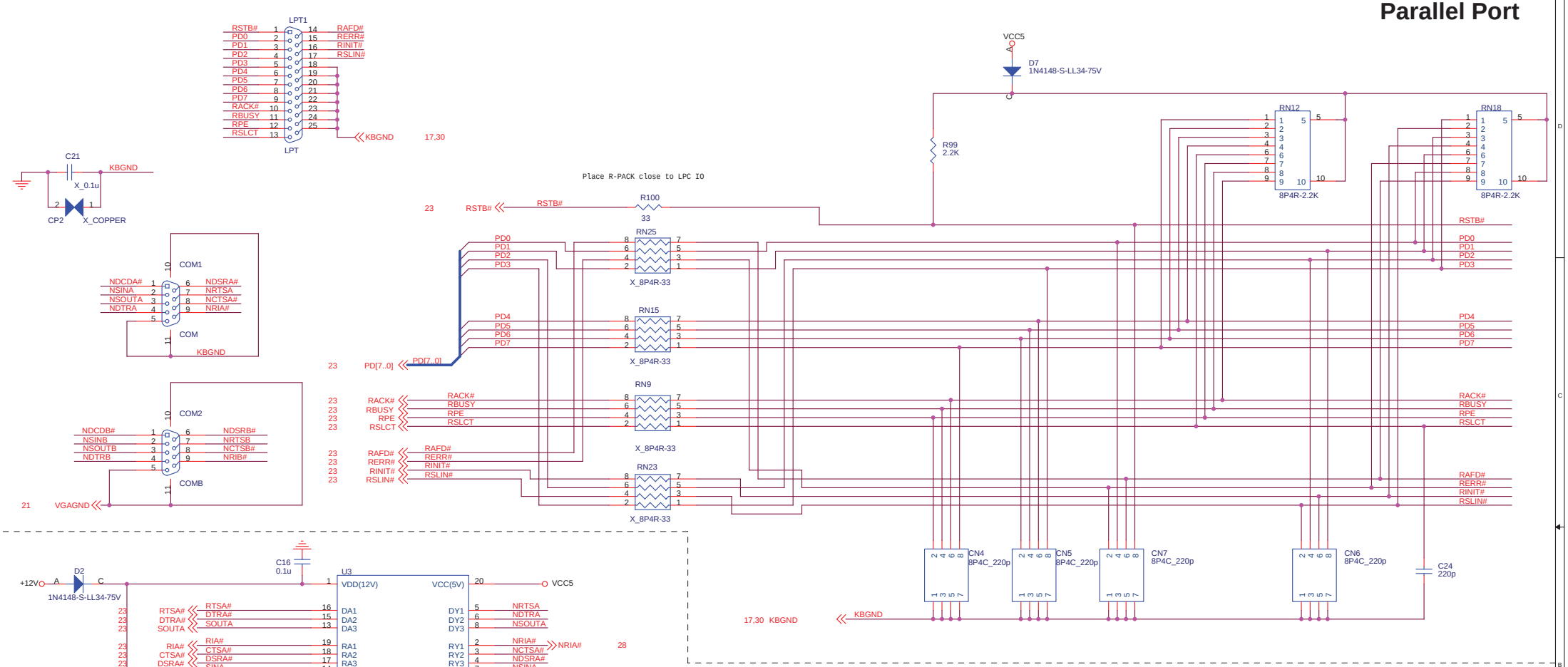

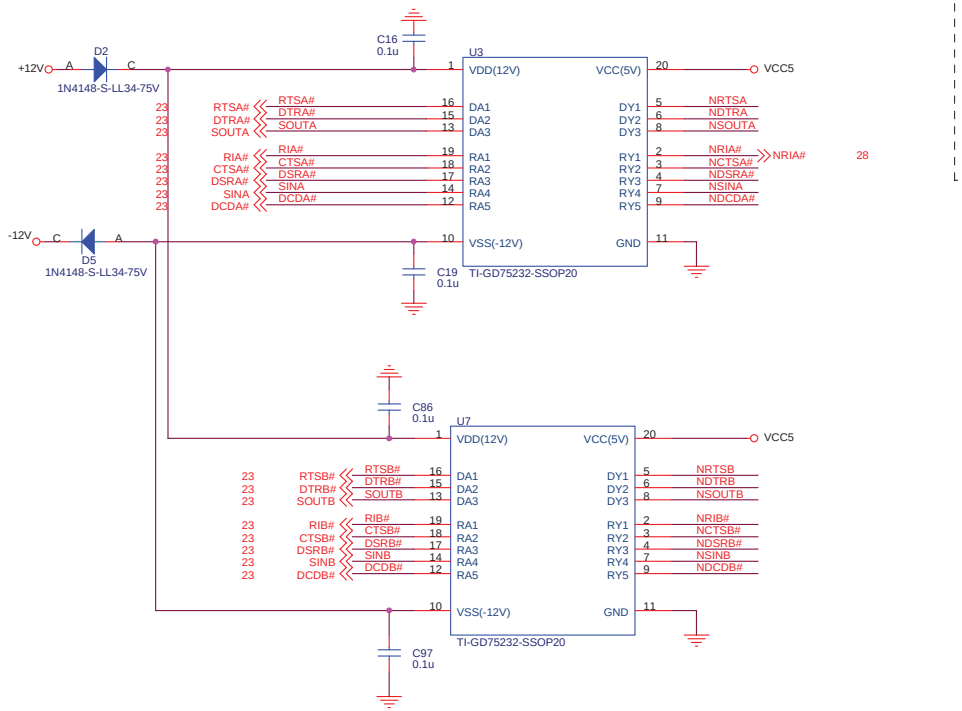

Serial Port

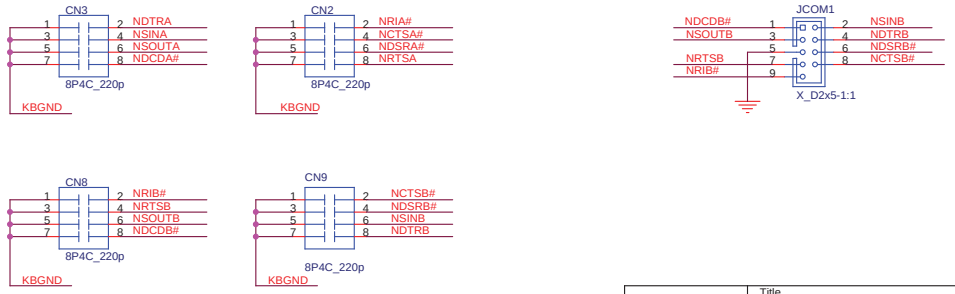

Micro-Star	Title: MS-6791	Rev: 100
Document Number: Parallel/Serial Port		
Last Revision Date: Monday, June 16, 2003	Sheet 24 of 30	

Voltage Regular Module

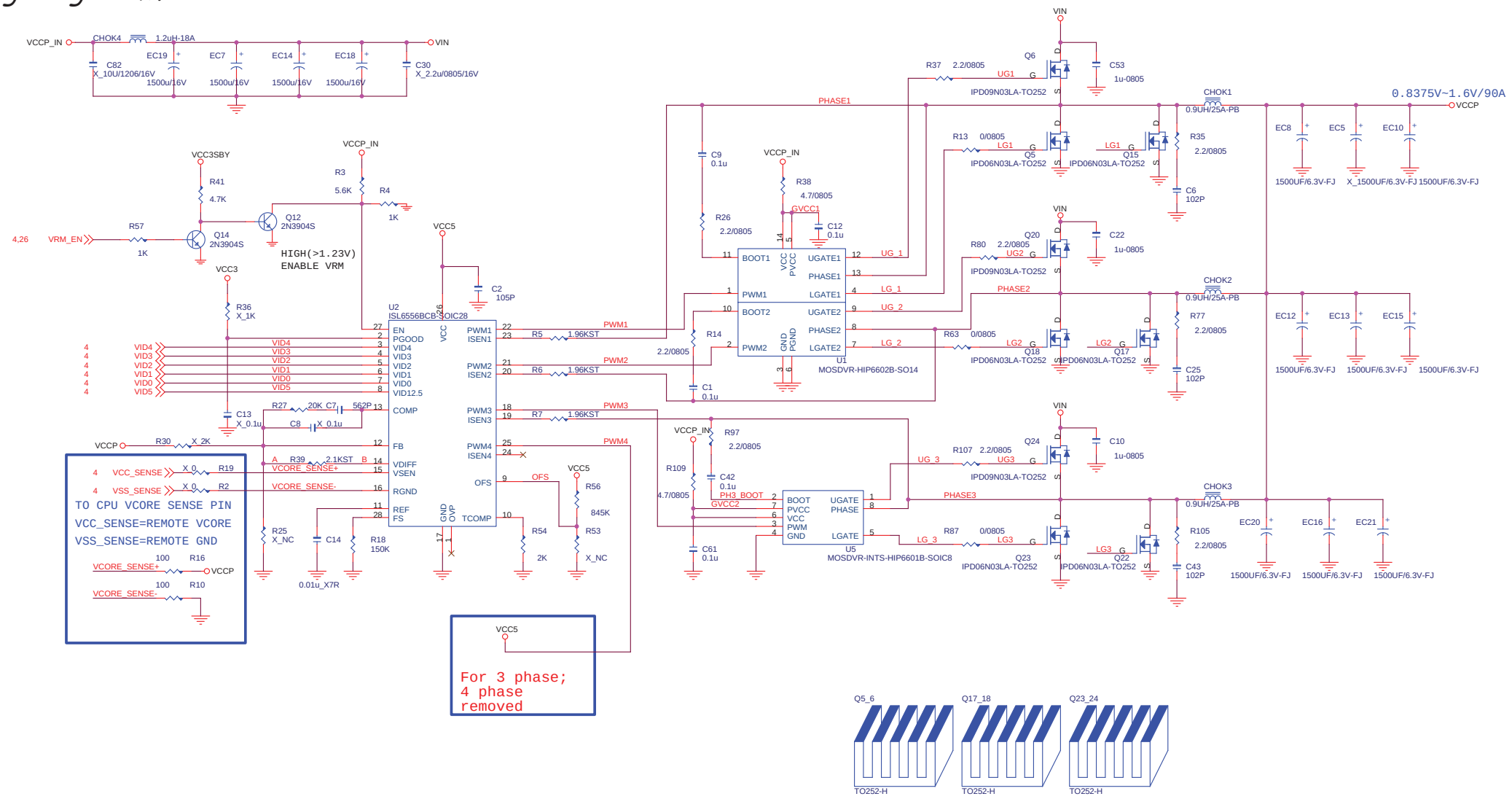

BOOT	CPU
LOW	Northwood
HIGH	Prescott

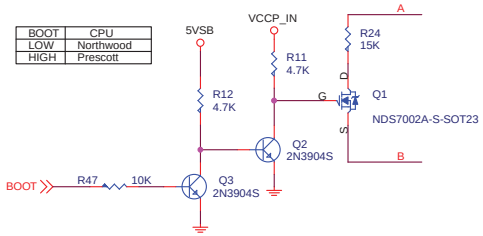

VID Pull-Up Rresistors

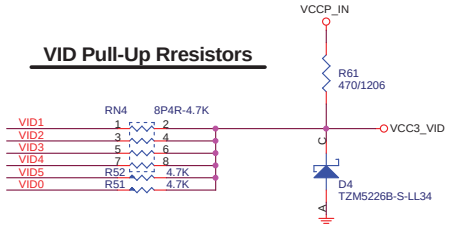

ATX12V Power Connector

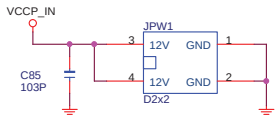

Micro-Star	Title: MS-6791	Rev: 100
Document Number: VRM 10.0		
Last Revision Date: Monday, June 16, 2003	Sheet 25 of 30	

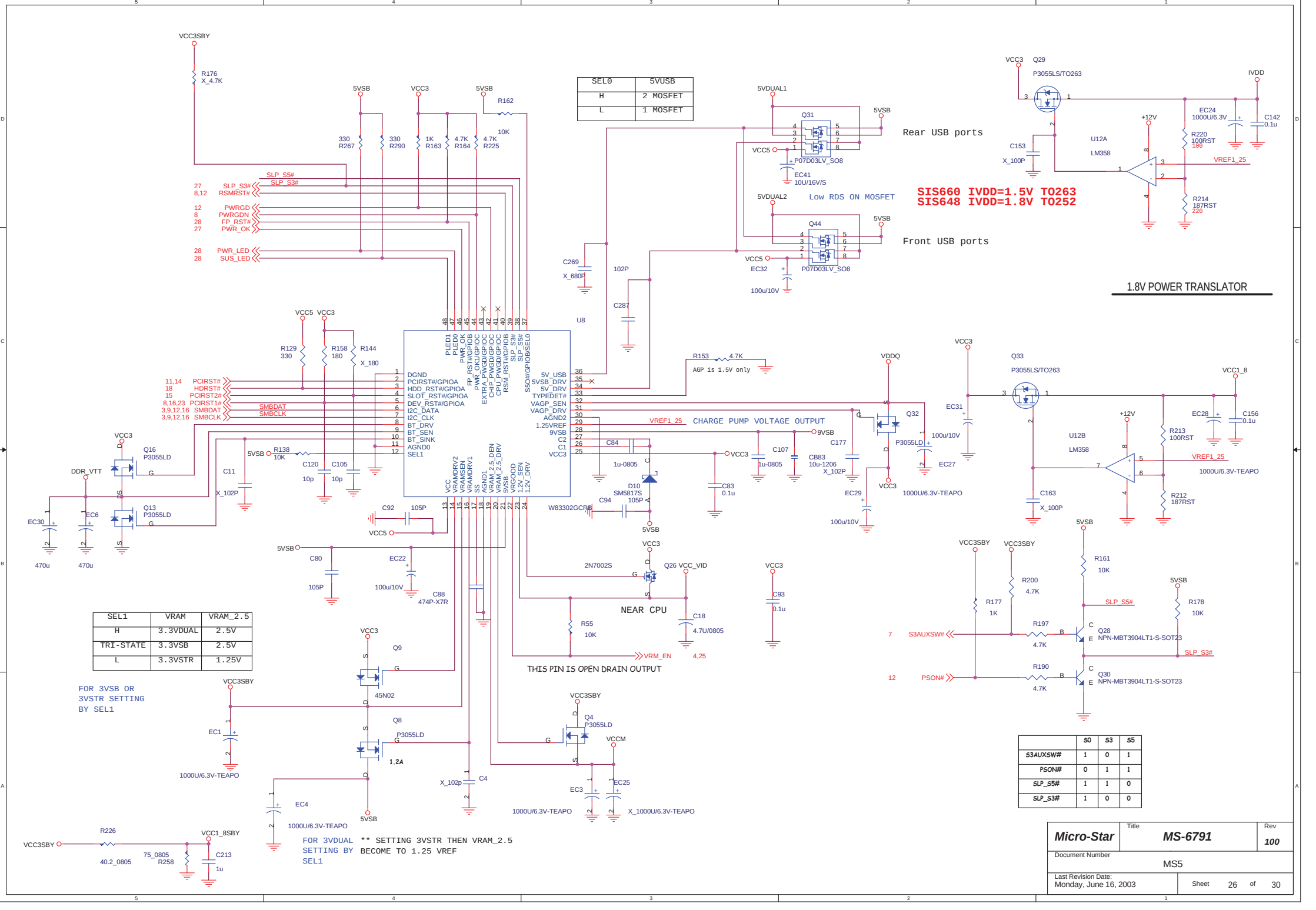
VCC3SBY
R176
X_4.7K
5VSB
VCC3
5VSB
R162
10K
330
R267
330
R290
1K
R163
4.7K
R164
4.7K
R225
SLP_S5#
SLP_S3#
27 SLP_S3#
8,12 RSMRST#
12 PWRGD
8 PWRGDN
28 FP_RST#
27 PWR_OK
28 PWR_LED
28 SUS_LED
SEL0 | 5VUSB
H | 2 MOSFET
L | 1 MOSFET
5VDUAL1
Q31
5VSB
VCC5
P07D03LV_SO8
EC41
10U/16V/S
Rear USB ports
5VDUAL2
Low RDS ON MOSFET
Q44
5VSB
VCC5
EC32
100u/10V
P07D03LV_SO8
Front USB ports
C269
X_680P
102P
C287
U8
VCC3
Q29
P3055LS/TO263
IVDD
EC24
1000U/6.3V
C142
0.1u
+12V
C153
X_100P
U12A
LM358
R220
100RST
100
VREF1_25
R214
187RST
220
SIS660 IVDD=1.5V TO263
SIS648 IVDD=1.8V TO252
1.8V POWER TRANSLATOR
VCC5 VCC3
R129
330
R158
180
R144
X_180
11,14 PCIRST#
18 HDRST#
15 PCIRST2#
8,16,23 PCIRST1#
3,9,12,16 SMBDAT
3,9,12,16 SMBCLK
SMBDAT
SMBCLK
DGND
PCIRST#/GPIOA
HDD_RST#/GPIOA
SLOT_RST#/GPIOA
DEV_RST#/GPIOA
I2C_DATA
I2C_CLK
BT_DRV
BT_SEN
BT_SINK
AGND0
SEL1
5V_USB
5VSB_DRV
5V_DRV
TYPEDET#
VAGP_SEN
VAGP_DRV
AGND2
1.25VREF
9VSB
C2
C1
VCC3
R153
4.7K
AGP is 1.5V only
VREF1_25
CHARGE PUMP VOLTAGE OUTPUT
9VSB
VDDQ
Q32
P3055LD
100u/10V
EC27
C177
CB83
10u-1206
X_102P
EC29
100u/10V
1000U/6.3V-TEAPO
VCC3
Q33
P3055LS/TO263
EC31
VCC1_8
EC28
C156
0.1u
U12B
LM358
R213
100RST
VREF1_25
1000U/6.3V-TEAPO
C163
X_100P
R212
187RST
VCC3
Q16
P3055LD
DDR_VTT
Q13
P3055LD
EC30
470u
EC6
470u
5VSB
R138
10K
C120
10p
C105
10p
C11
X_102P
C84
1u-0805
D10
SM5817S
C94
105P
W83302GCRB
C83
0.1u
C107
1u-0805
C92
105P
VCC5
5VSB
C80
105P
EC22
100u/10V
C88
474P-X7R
2N7002S
Q26 VCC_VID
NEAR CPU
C18
4.7U/0805
R55
10K
VRM_EN
4,25
THIS PIN IS OPEN DRAIN OUTPUT
C93
0.1u
VCC3SBY
VCC3SBY
R200
4.7K
R177
1K
R161
10K
5VSB
R178
10K
SLP_S5#
7 S3AUXSW#
R197
4.7K
Q28
NPN-MBT3904LT1-S-SOT23
SLP_S3#
12 PSON#
R190
4.7K
Q30
NPN-MBT3904LT1-S-SOT23
SEL1 | VRAM | VRAM_2.5
H | 3.3VDUAL | 2.5V
TRI-STATE | 3.3VSB | 2.5V
L | 3.3VSTR | 1.25V
FOR 3VSB OR
3VSTR SETTING
BY SEL1
VCC3
Q9
45N02
VCC3SBY
EC1
1000U/6.3V-TEAPO
Q8
P3055LD
1.2A
EC4
1000U/6.3V-TEAPO
5VSB
X_102p
C4
VCC3SBY
Q4
P3055LD
VCCM
EC3
EC25
1000U/6.3V-TEAPO
X_1000U/6.3V-TEAPO
VCC3SBY
R226
40.2_0805
75_0805
R258
VCC1_8SBY
C213
1u
FOR 3VDUAL
SETTING BY
SEL1
** SETTING 3VSTR THEN VRAM_2.5
BECOME TO 1.25 VREF
S0 S3 S5
S3AUXSW# 1 0 1
PSON# 0 1 1
SLP_S5# 1 1 0
SLP_S3# 1 0 0
Micro-Star
Title
MS-6791
Rev
100
Document Number
MS5
Last Revision Date:
Monday, June 16, 2003
Sheet 26 of 30

ATX CONNECTOR

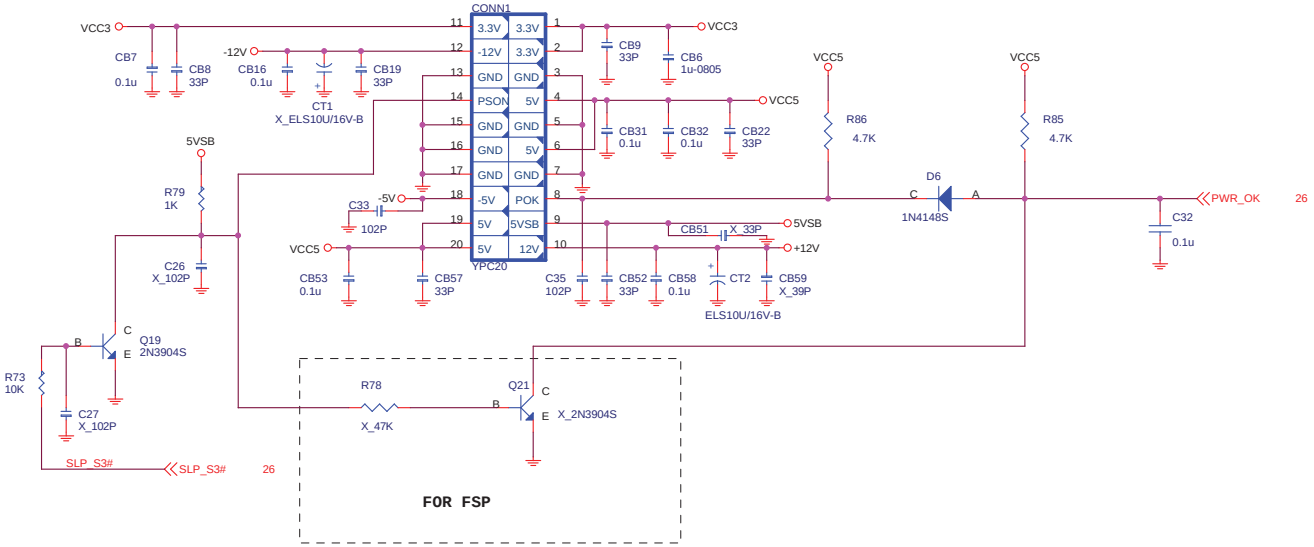

Micro-Star	Title: MS-6791	Rev: 100
Document Number: ATX Power Conn.		
Last Revision Date: Monday, June 16, 2003	Sheet 27 of 30	

INTEL FRONT PANEL-M

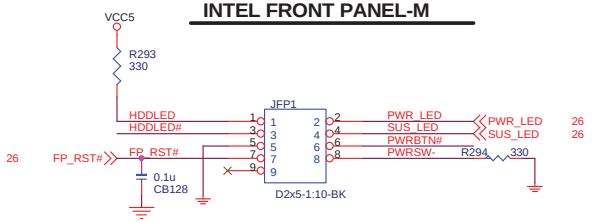

LEGEND FRONT PANEL-M

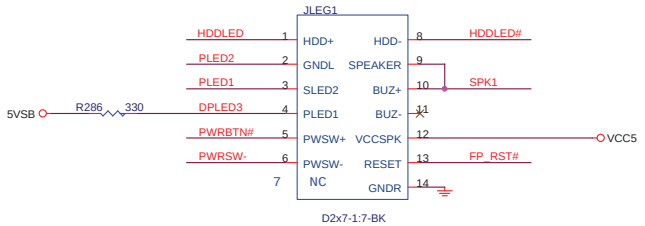

6/8/2001

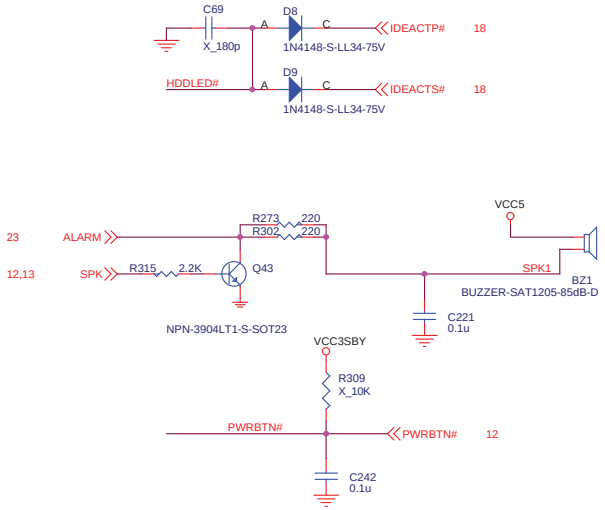

IR HEADER

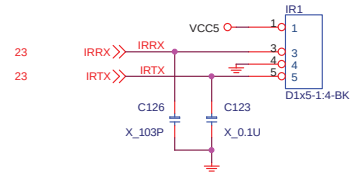

Dual Color LED Block

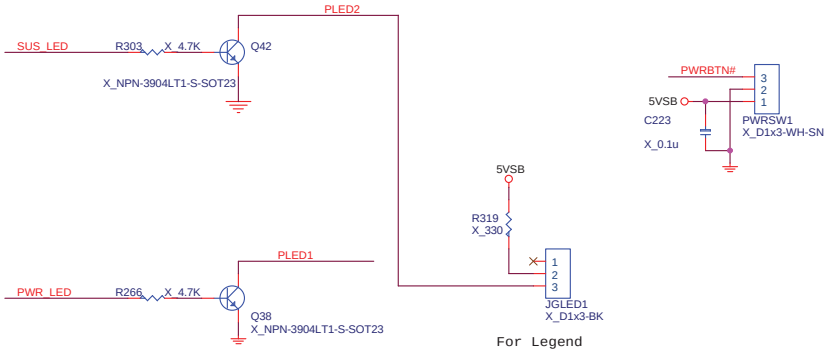

Wake by Modem

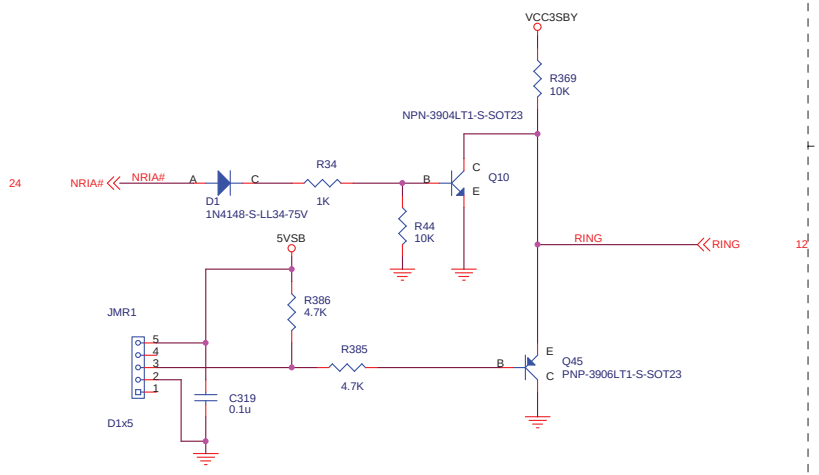

Sleep Button

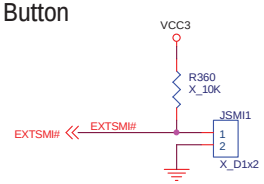

Wake by LAN

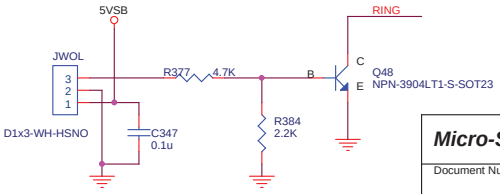

Micro-Star	Title: MS-6791	Rev: 100
Document Number: FRONT PANEL		
Last Revision Date: Monday, June 16, 2003	Sheet 28 of 30	

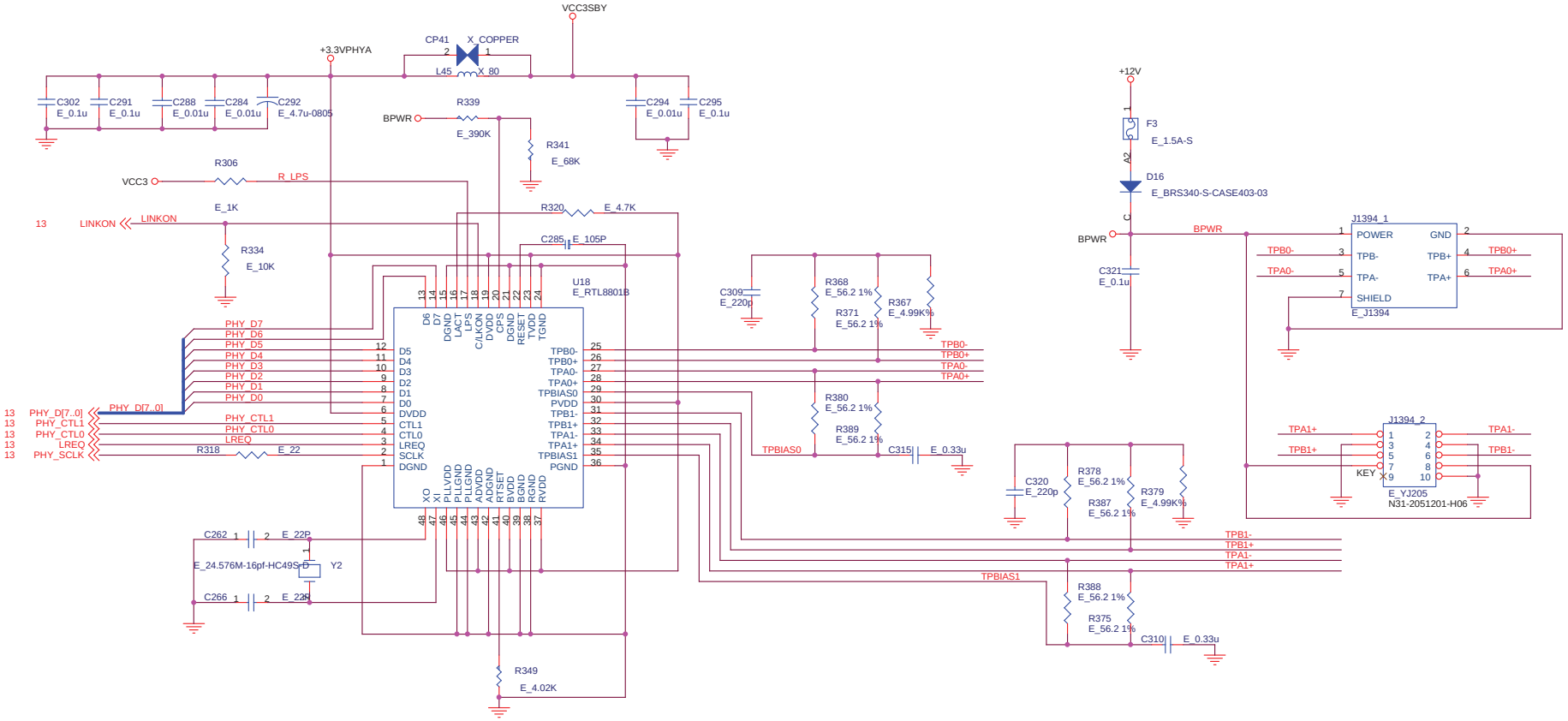

Micro-Star	Title: MS-6791	Rev: 100
Document Number: IEEE 1394		
Last Revision Date: Monday, June 16, 2003	Sheet 29 of 30	

PCB OTHER COMPONENT

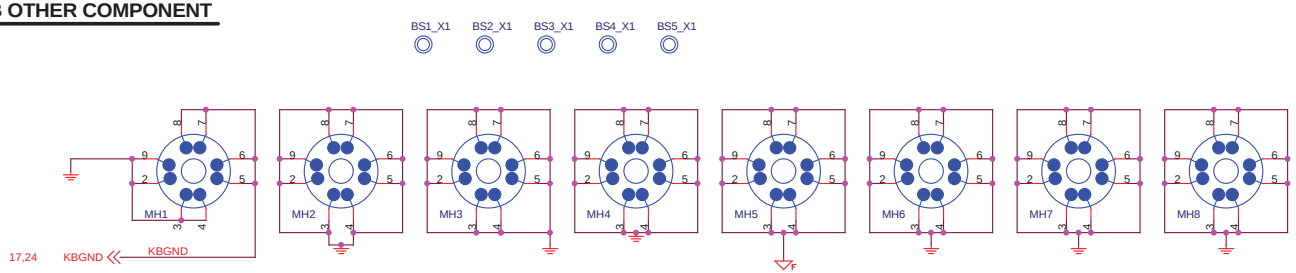

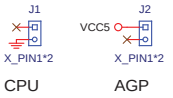

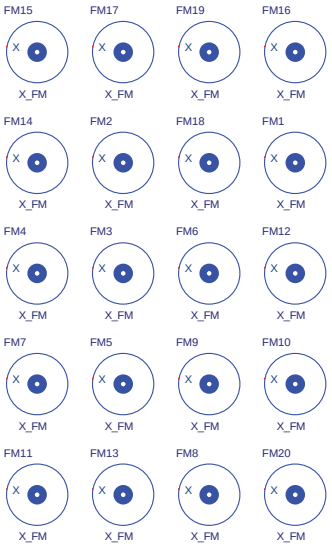

MS6791PCB

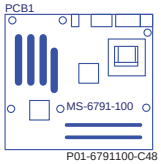

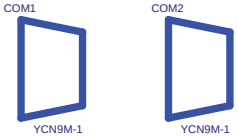

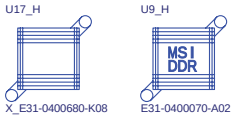

BAT SOCKET

LAN DISABLE

INTEL AUDIO

LEGEND AUDIO

KKK=JAUD1(11-12,13-14)

BIOS WRITE PROTECT

JBAT1 Clear CMOS	
1 - 2	Normal ★
2 - 3	Clear CMOS

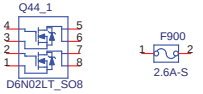

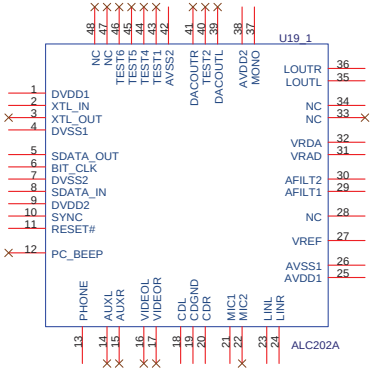

System Decoupling Capacitors

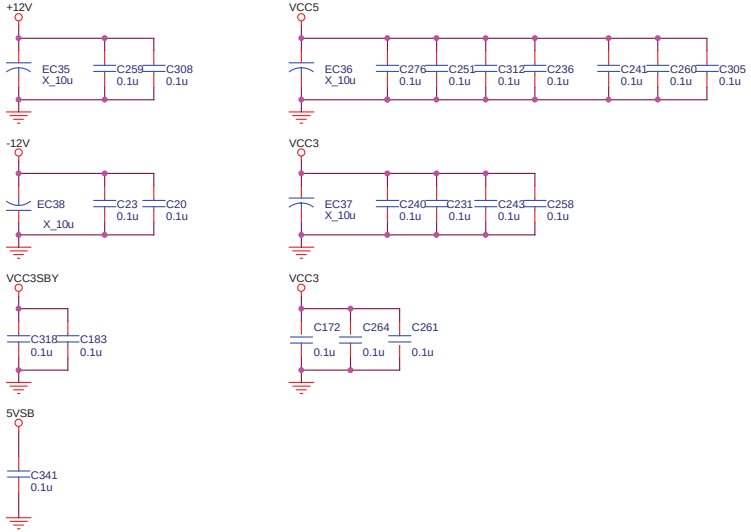

High Freq. return current decoupling

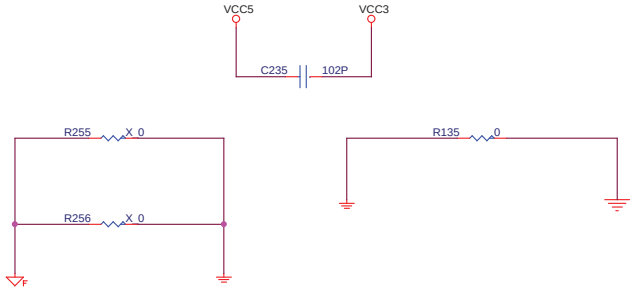

Micro-Star	Title: MS-6791	Rev: 100
Document Number: DECOUPLING CAPACIROT		
Last Revision Date: Monday, June 16, 2003	Sheet 30 of 30	