Cover Sheet	1
Block Diagram	2
GPIO	3
Intel mPGA478B CPU - Signals	4
Intel mPGA478B CPU - Power	5
Intel Breeds Hill - Host Signals	6
Intel Breeds Hill - Memory Signals	7
Intel Breeds Hill - AGP	8
DDR DIMM 1,2	9
PCB Holes	10
ICH5(1)	11
ICH5(2)	12
ICS952611 & FWH & FDD	13
LPC I/O -W83627THF	14
AC97 Audio	15
AGP 4X/8X Slot & FAN	16
PCI Slots 1 & 2 & 3	17
PCI Slots 4 & 5	18
ATA33/66/100 IDE & Video Connectors	19
USB Connectors	20
ACPI controller	21
ATX & Front Panel	22
VRM 10.0 FMB2	23
DLED BRACKET	24
VID Adjust	25
EMI parts	26
RTL8100C/8110S	27
LAN Connector	28

MS(6788)

Version 200

Intel (R) Breeds Hill (GMCH) + ICH5 Chipset
Intel Northwood mPGA478B Processor

CPU:

Intel Northwood

System Chipset:

Intel Breeds Hill - GMCH (North Bridge)
Intel ICH5 (South Bridge)

On Board Chipset:

BIOS -- FWH EEPROM
AC'97 Codec -- ALC655
LPC Super I/O -- W83627THF
LAN --RTL8100C/8110S
CLOCK --ICS 952611

Main Memory:

DDR * 3 (Max 3GB)

Expansion Slots:

PCI2.3 SLOT * 5

ST PWM:

Controller: ST L6710

Block Diagram

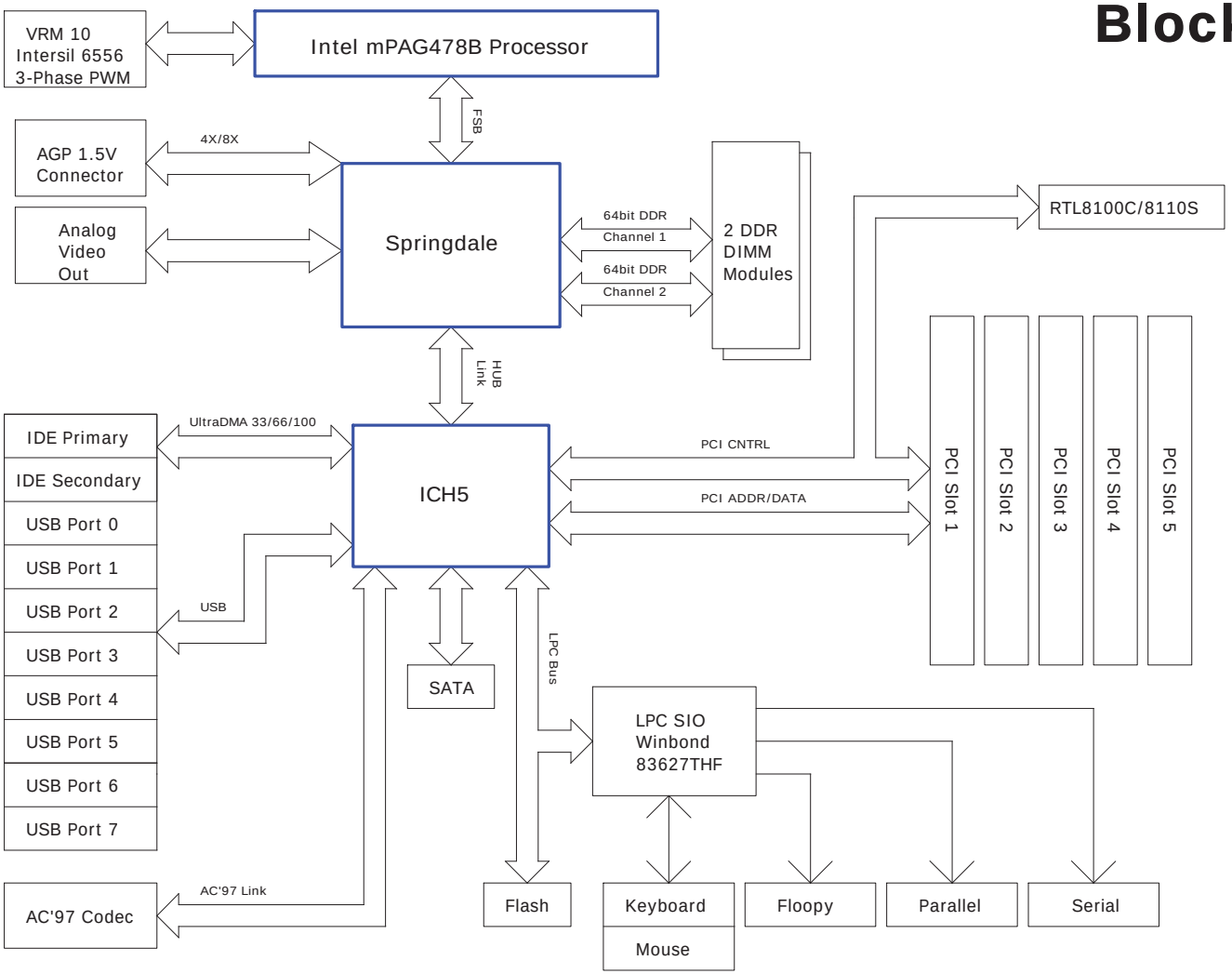

MSI	MICRO-STAR INt'L CO., LTD.	
Title	BLOCK DIAGRAM	
Size	Document Number MS-6788	Rev 10A
Date: Tuesday, November 25, 2003	Sheet 2 of 29	

ICH5

	GPIO Pin	Type	Function	Power well	
	GPIO 0	I	PREQ#B	MAIN	
	GPIO 1	I	PREQ#B	MAIN	
	GPIO 2	I	PIRQ#E	MAIN	
	GPIO 3	I	PIRQ#F	MAIN	
	GPIO 4	I	PIRQ#G	MAIN	
	GPIO 5	I	PIRQ#H	MAIN	
	GPIO 6	I	GPI6	MAIN	
	GPIO 7	I	GPI7	MAIN	
	GPIO 8	I	**CSA_PME#**	RESUME	
	GPIO 9	I	OC4#	RESUME	
	GPIO 10	I	OC5#	RESUME	
	GPIO 11	I	**SIO_SMI#**	RESUME	
	GPIO 12	I	**EXTSMI#**	RESUME	
	GPIO 13	I	**SIO_PME#**	RESUME	
	GPIO 14	I	OC#6	RESUME	
	GPIO 15	I	OC#7	RESUME	
	GPIO 16	O	PGNT#A	MAIN	
	GPIO 17	O	PGNT#B	MAIN	
	GPIO 18	O	GPO18	MAIN	
	GPIO 19	O	**BIOS_WP#**	MAIN	
	GPIO 20	O	GPO20	MAIN	
	GPIO 21	O	GPO21	MAIN	
	GPIO 22	OD	GPO22	MAIN	
	GPIO 23	O	GPO23	MAIN	
	GPIO 24	I/O	GPIO24	RESUME	default output
	GPIO 25	I/O	**LAN_DISABLE#**	RESUME	default output
	GPIO 27	I/O	GPIO27	RESUME	default output
*	GPIO 28	I/O	GPIO28	RESUME	default output
	GPIO 32	I/O	GPIO32	MAIN	default output
	GPIO 33	I/O	GPIO33	MAIN	default output
	GPIO 34	I/O	GPIO34	MAIN	default output
	GPIO 40	I	PREQ#4	MAIN	
	GPIO 41	I	GPI41	MAIN	
	GPIO 48	O	PGNT#4	MAIN	
	GPIO 49	OD	CPUPWRGD	MAIN	

FWH

	GPIO Pin	Type	Function
	GPI 0	I	PD_DET
	GPI 1	I	SD_DET
*	GPI 2	I	Pull down through 1K ohms (unused)
	GPI 3	I	Pull down through 1K ohms (unused)
*	GPI 4	I	Pull down through 1K ohms (unused)

PCI Config.

DEVICE	MCP1 INT Pin	REQ#/GNT#	IDSEL	CLOCK	CLK GEN PIN OUT
PCI Slot 1	INTA# INTB# INTC# INTD#	PCI_REQ#0 PCI_GNT#0	AD16	PCICLK0	13 (PCI_CLK0)
PCI Slot 2	INTB# INTC# INTD# INTA#	PCI_REQ#1 PCI_GNT#1	AD17	PCICLK1	14 (PCI_CLK1)
PCI Slot 3	INTC# INTD# INTA# INTB#	PCI_REQ#2 PCI_GNT#2	AD18	PCICLK2	15 (PCI_CLK2)
PCI Slot 4	INTD# INTA# INTB# INTC#	PCI_REQ#3 PCI_GNT#3	AD19	PCICLK3	16 (PCI_CLK3)
PCI Slot 5	INTB# INTC# INTD# INTA#	PCI_REQ#4 PCI_GNT#4	AD21	PCICLK4	19 (PCI_CLK4)

DDR DIMM Config.

DEVICE	ADDRESS	CLOCK
DIMM 1	1010000B	MCLK_A0/MCLK_A0# MCLK_A1/MCLK_A1# MCLK_A2/MCLK_A2#
DIMM 2	1010001B	MCLK_B0/MCLK_B0# MCLK_B1/MCLK_B1# MCLK_B2/MCLK_B2#

PCI RESET DEVICE

Signals	Target
PCIRST#1	Springdale,LAN,FWH, Super I/O
PCIRST#2	PCI slot 1-3, AGP slot
HD_RST#	Primary, Scondary IDE

CPU SIGNAL BLOCK

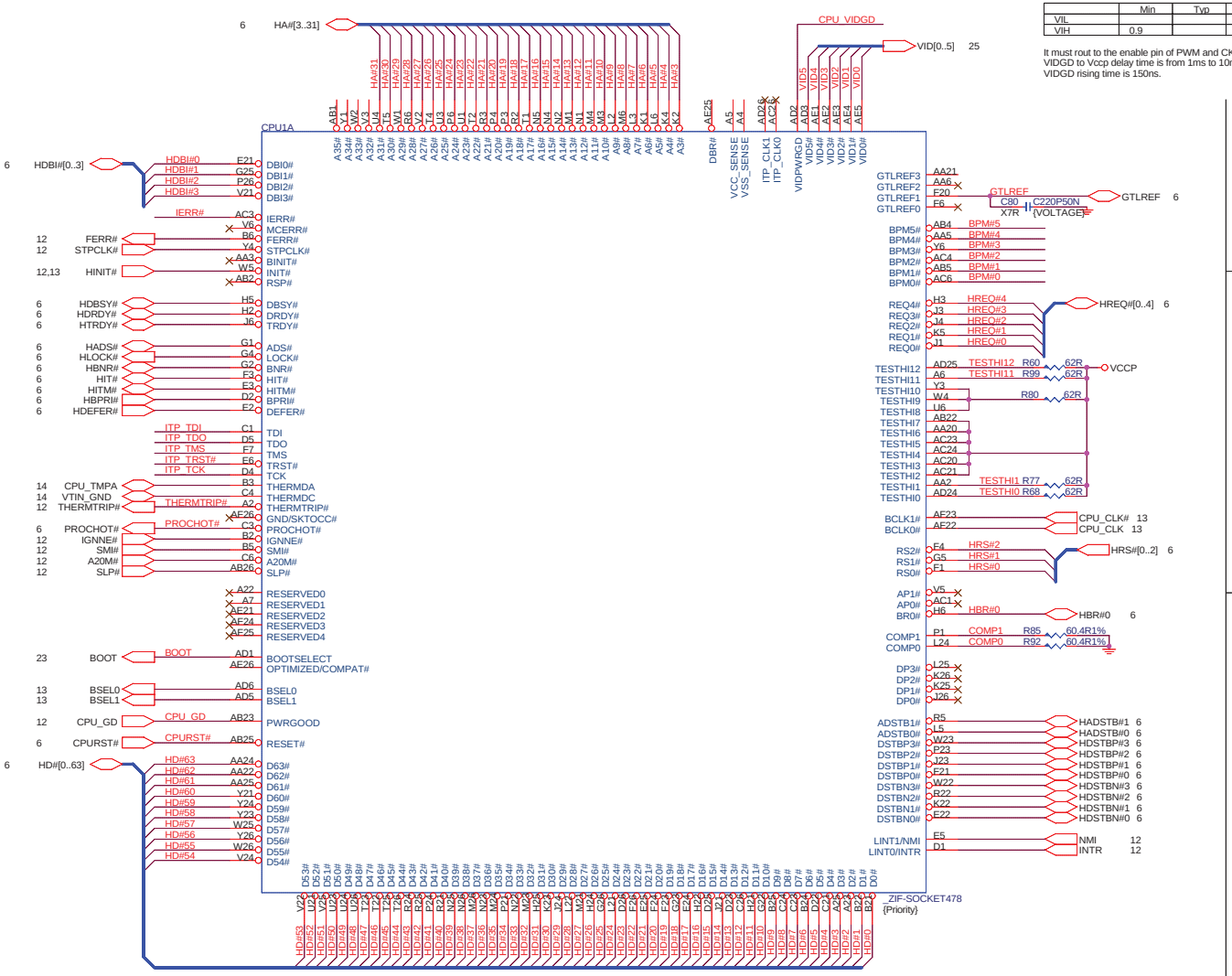

VIDPWRGD DC Specifications

	Min	Typ	Max
VIL			0.3
VIH	0.9		

It must rout to the enable pin of PWM and CK-409.
VIDGD to Vccp delay time is from 1ms to 10ms.
VIDGD rising time is 150ns.

CPU GTL REFERNCE VOLTAGE BLOCK

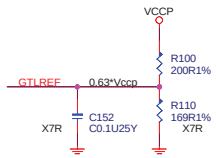

CPU ITP BLOCK

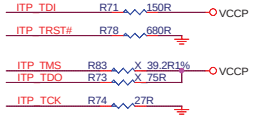

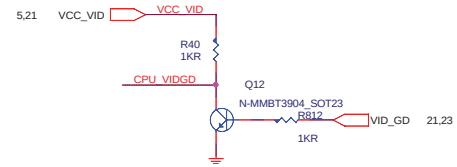

CPU STRAPPING RESISTORS

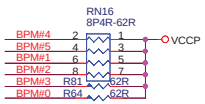

ALL COMPONENTS CLOSE TO CPU

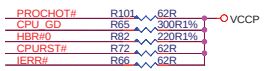

MICRO-STAR INt'L CO., LTD.

Title	Intel mPGA478B - Signals
Size	
Document Number	MS-6788
Rev	10A
Date:	Wednesday, September 22, 2004
Sheet	4 of 29

CPU VOLTAGE BLOCK

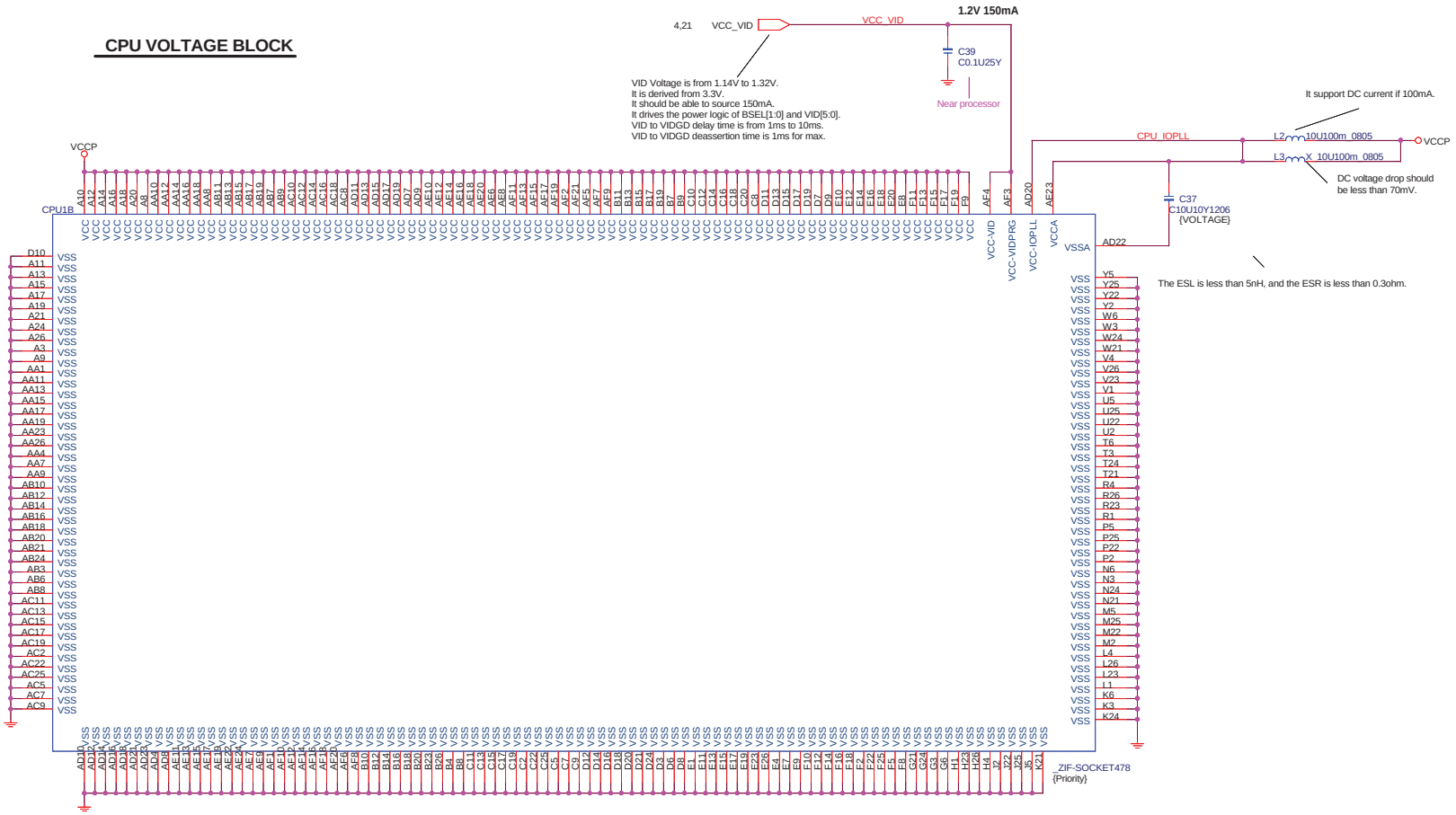

CPU DECOUPLING CAPACITORS

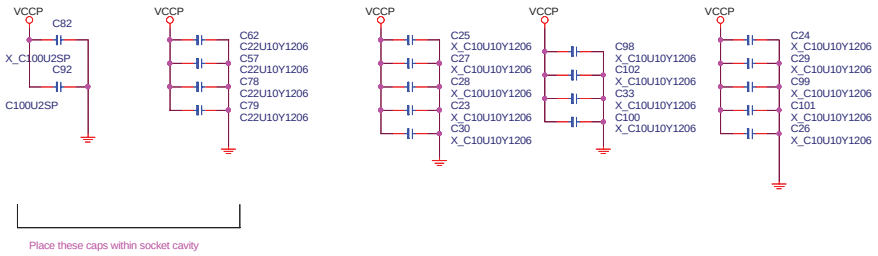

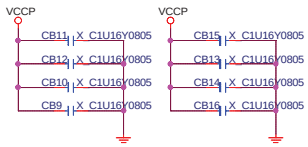

MICRO-STAR INt'L CO., LTD.		
Title	Intel mPGA478B - Power	
Size	Document Number MS-6788	Rev 10A
Date: Friday, June 04, 2004	Sheet 5 of 29	

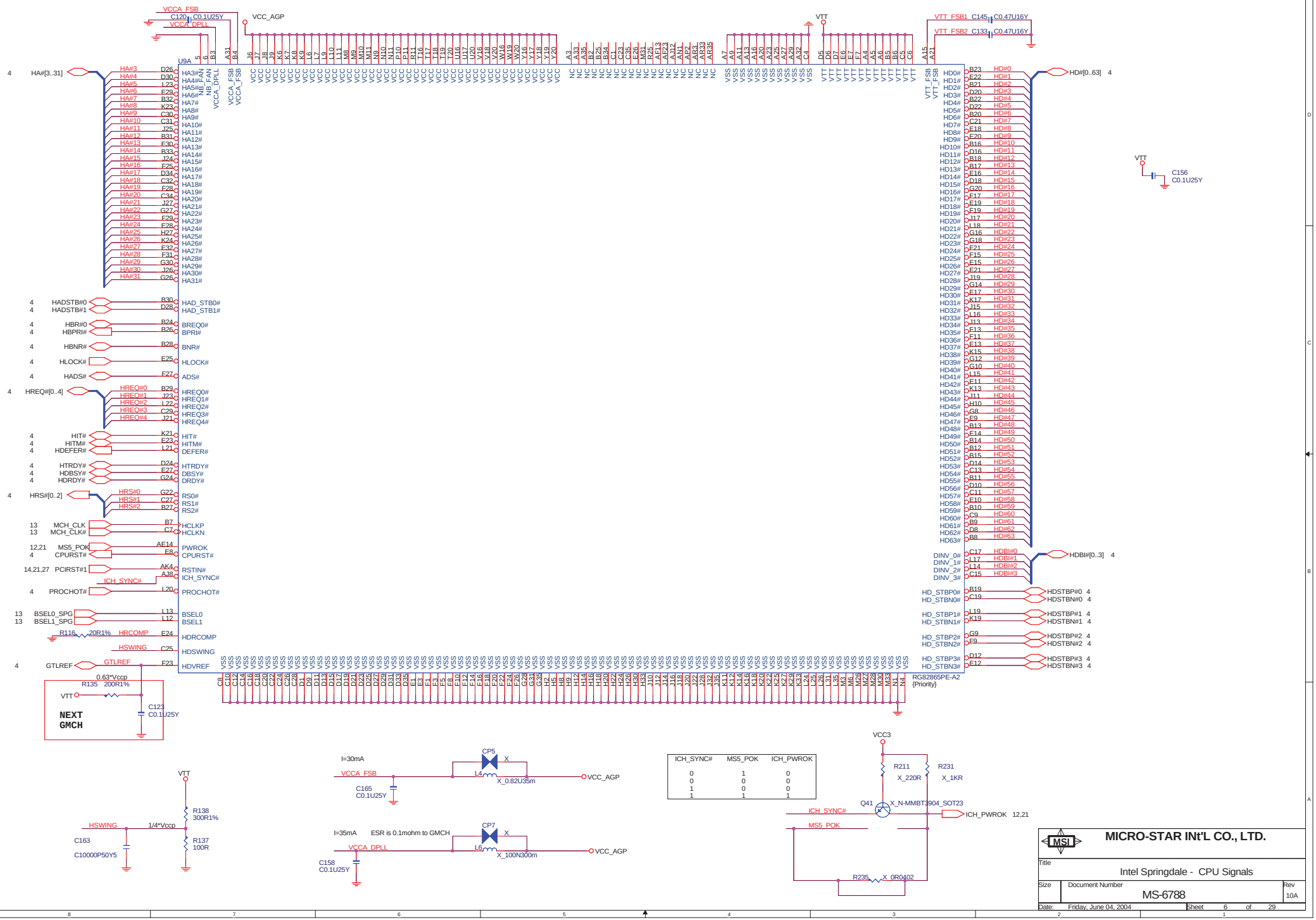

ICH_SYNC#	MS5_POK	ICH_PWROK
0	1	0
0	0	0
1	0	0
1	1	1

MICRO-STAR INt'L CO., LTD.

Title: Intel Springdale - CPU Signals

Size | Document Number: MS-6788 | Rev: 10A

Date: Friday, June 04, 2004 | Sheet 6 of 29

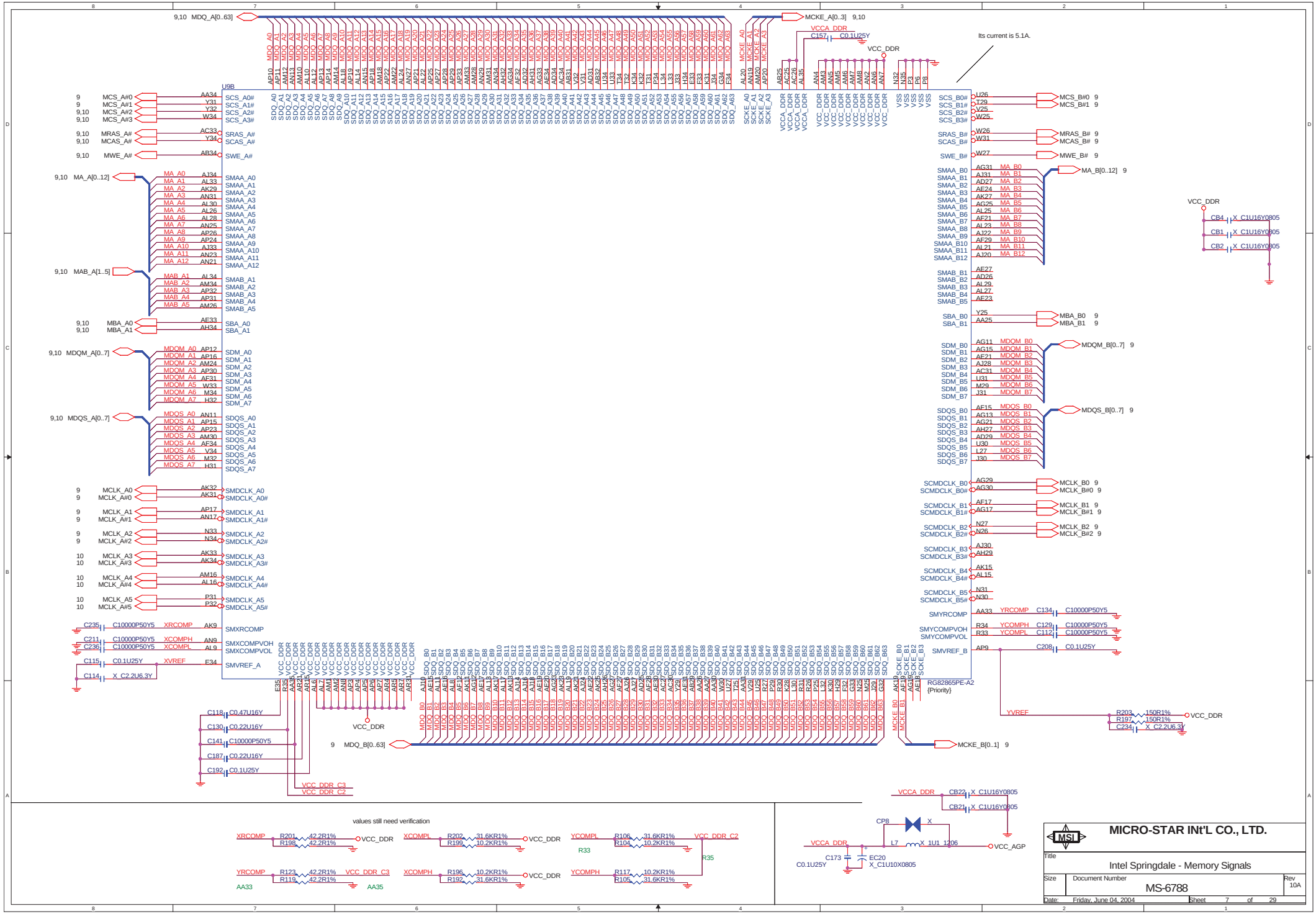
U9B
RG82865PE-A2
{Priority}
Its current is 5.1A.
VCC_DDR
VCCA_DDR
VCC_AGP
values still need verification
MICRO-STAR INT'L CO., LTD.
Title
Intel Springdale - Memory Signals
Size
Document Number
MS-6788
Rev
10A
Date: Friday, June 04, 2004
Sheet 7 of 29

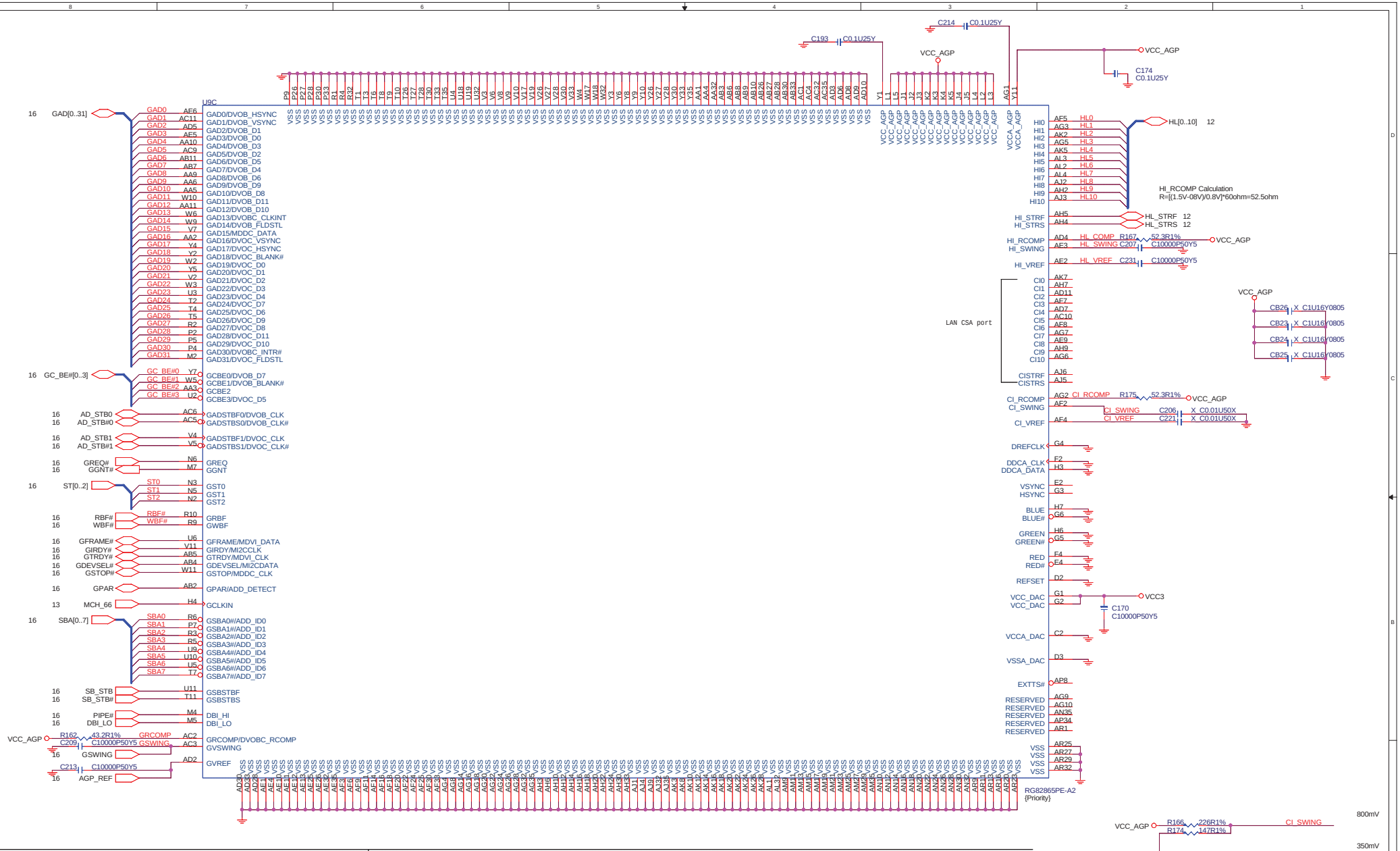
U9C
RG82865PE-A2
{Priority}
VCC_AGP
VCC_DDR
C214 C0.1U25Y
C193 C0.1U25Y
C174 C0.1U25Y
HL[0..10] 12
HI_RCOMP Calculation
R=[(1.5V-08V)/0.8V]*60ohm=52.5ohm
HI_STRF 12
HI_STRS 12
HL_COMP R167 52.3R1%
HL_SWING C207 C10000P50Y5
HL_VREF C231 C10000P50Y5
LAN CSA port
CB26 X C1U16Y0805
CB23 X C1U16Y0805
CB24 X C1U16Y0805
CB25 X C1U16Y0805
CI_RCOMP R175 52.3R1%
CI_SWING C206 X C0.01U50X
CI_VREF C221 X C0.01U50X
VCC3
C170 C10000P50Y5
16 GAD[0..31]
16 GC_BE#[0..3]
16 AD_STB0
16 AD_STB#0
16 AD_STB1
16 AD_STB#1
16 GREQ#
16 GGNT#
16 ST[0..2]
16 RBF#
16 WBF#
16 GFRAME#
16 GIRDY#
16 GTRDY#
16 GDEVSEL#
16 GSTOP#
16 GPAR
13 MCH_66
16 SBA[0..7]
16 SB_STB
16 SB_STB#
16 PIPE#
16 DBI_LO
VCC_AGP R162 43.2R1% GRCOMP
C209 C10000P50Y5 GSWING
16 GSWING
C213 C10000P50Y5
16 AGP_REF
800mV
350mV
R166 226R1% CI_SWING
R174 147R1%
R173 113R1% CI_VREF
H_SWING=(0.8*VCC_AGP)+-2%
R217 226R1% HL_SWING 800mV
R218 147R1% H_SWING 12
C270 C0.1U25Y
HL_VREF 350mV
R214 113R1% C255 C0.1U25Y
H_VREF 12
H_SWING=(0.233*VCC_AGP)+-2%
Springdale Decoupling Capacitors
C212
C2.2U6.3Y
MICRO-STAR INt'L CO., LTD.
Title
Intel Springdale - AGP & HLink & LAN Signals
Size
Document Number
MS-6788
Rev
10A
Date: Friday, June 04, 2004
Sheet 8 of 29

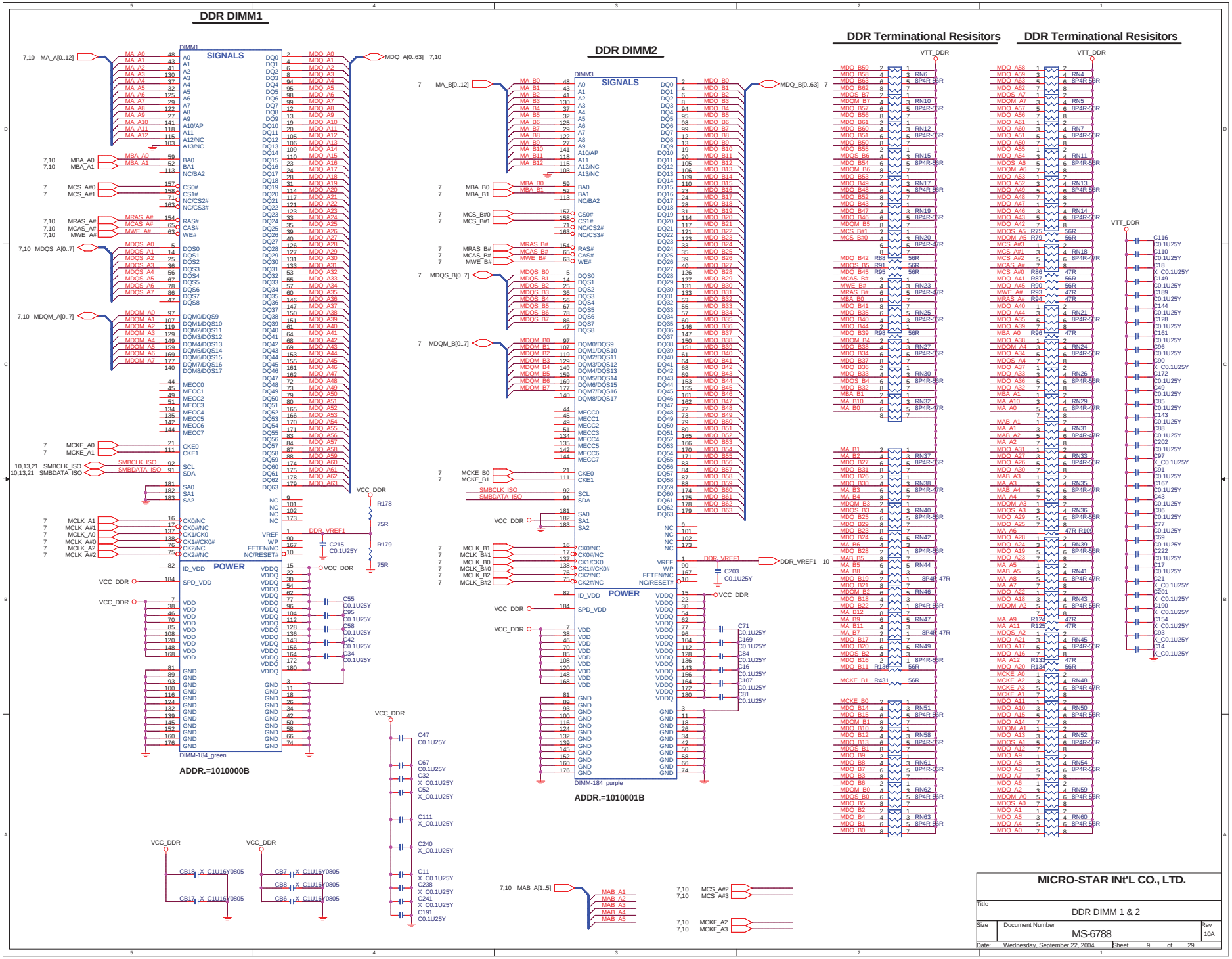
DDR DIMM1
DDR DIMM2
DDR Terminational Resisitors
DDR Terminational Resisitors
DIMM1
SIGNALS
POWER
DIMM-184_green
ADDR.=1010000B
DIMM3
SIGNALS
POWER
DIMM-184_purple
ADDR.=1010001B
VTT_DDR
VCC_DDR
DDR_VREF1
MICRO-STAR INt'L CO., LTD.
Title
DDR DIMM 1 & 2
Size
Document Number
MS-6788
Rev
10A
Date: Wednesday, September 22, 2004
Sheet 9 of 29

Optics Orientation Holes

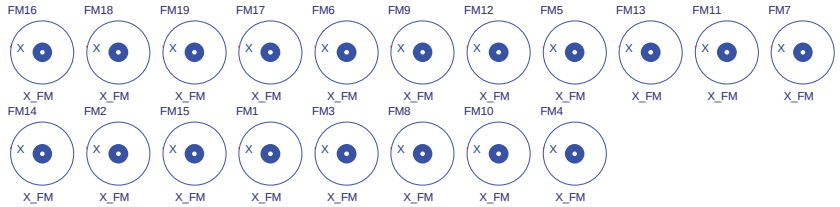

Mounting Holes

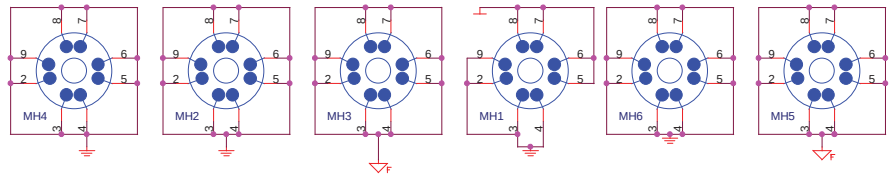

Simulation

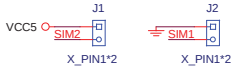

DDR DIMM3

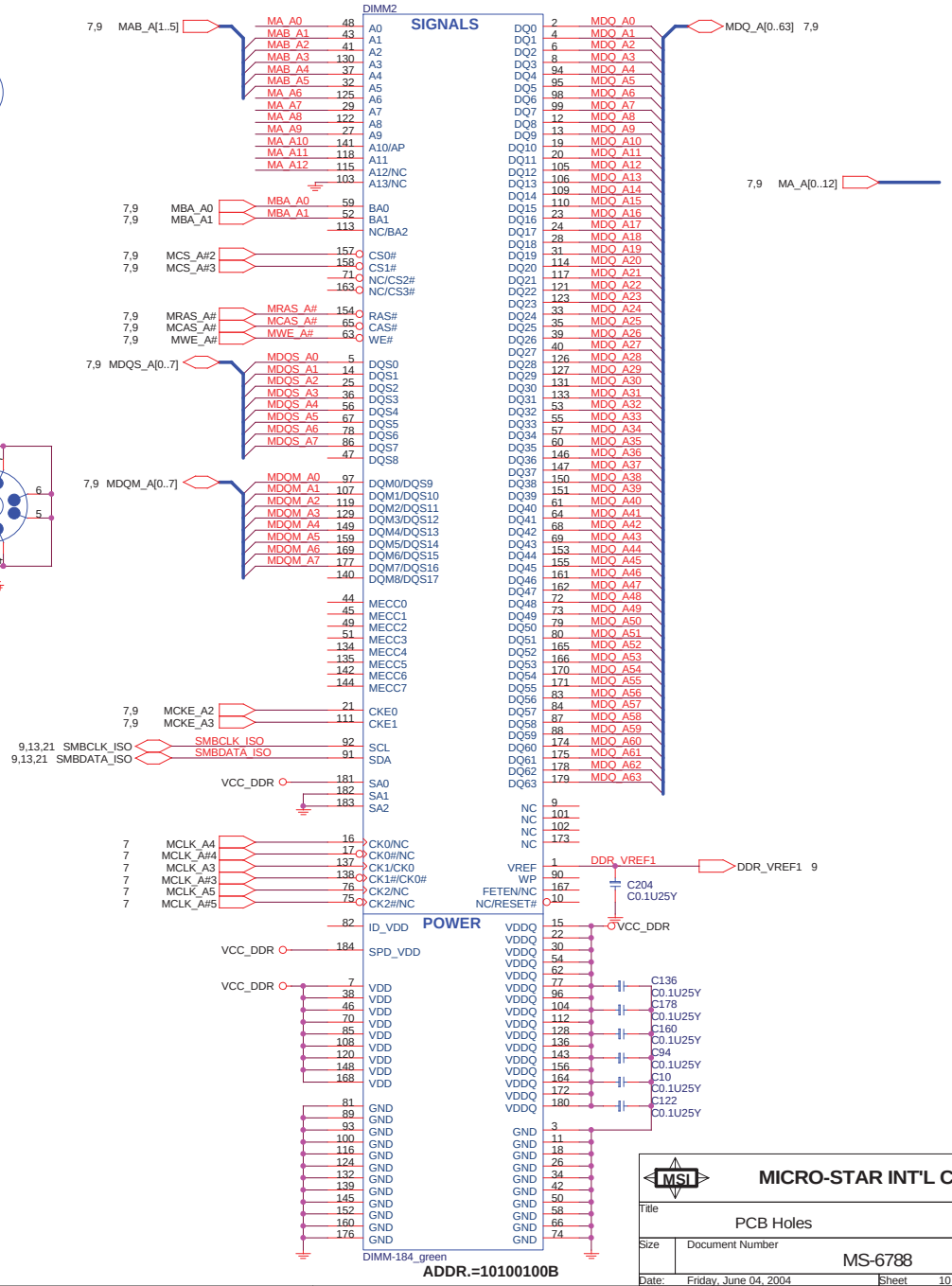

MSI	MICRO-STAR INT'L CO.,LTD.	
Title	PCB Holes	
Size	Document Number: MS-6788	Rev 10A
Date: Friday, June 04, 2004	Sheet 10 of 29	

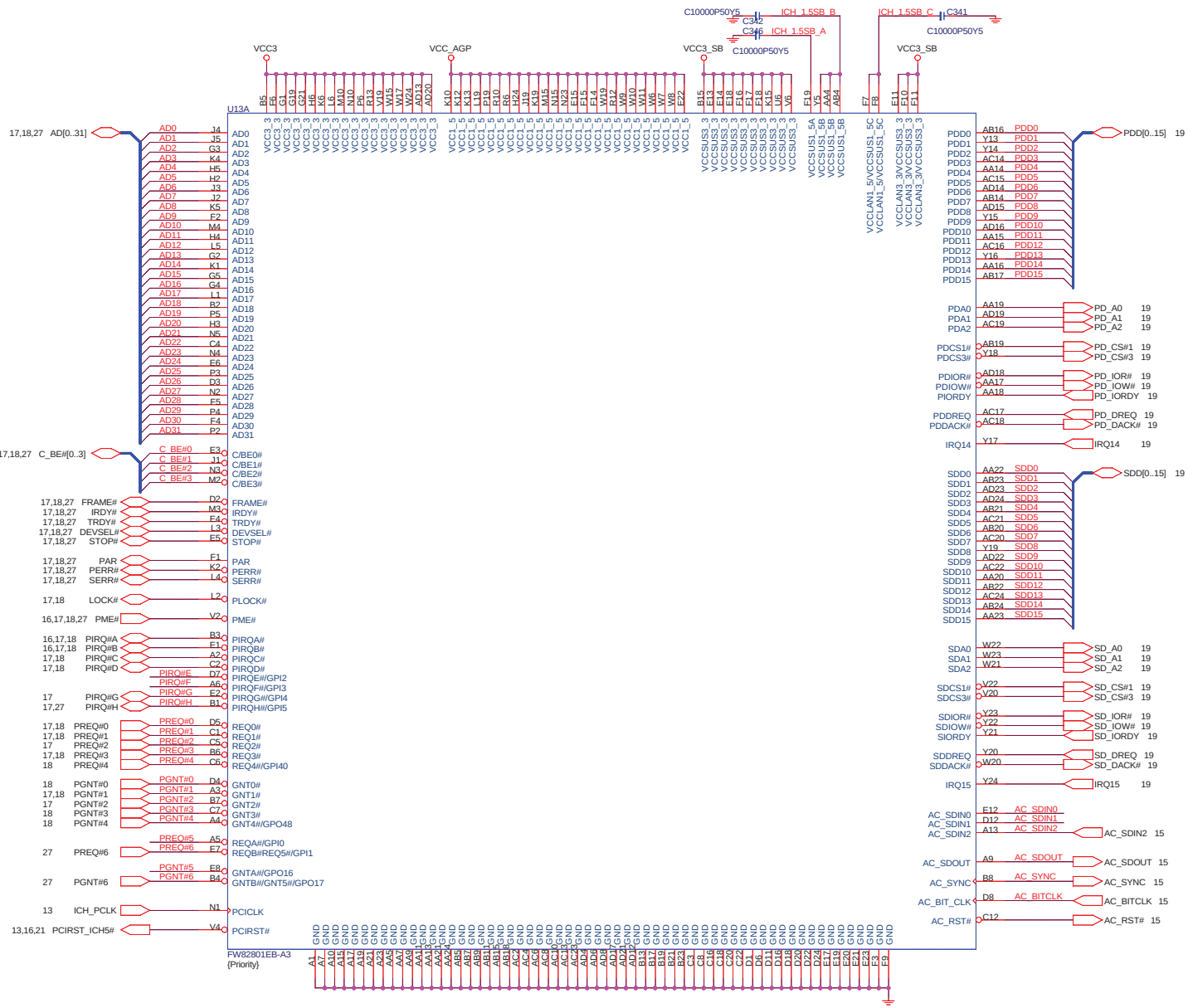

ICH5 Pull-Up / Down Resistors

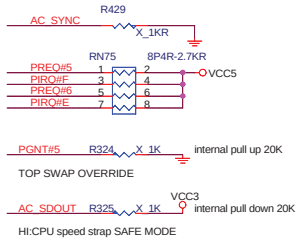

ICH5 Decoupling Capacitors

All caps be placed less than 100mils.

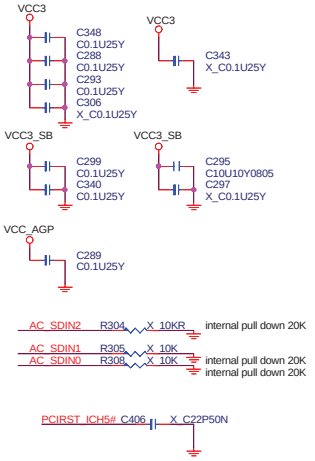

MICRO-STAR INt'L CO., LTD.

Title	Intel ICH5 - PCI & IDE & AC97 Signals	
Size	Document Number MS-6788	Rev 10A
Date: Wednesday, September 22, 2004	Sheet 11 of 29	

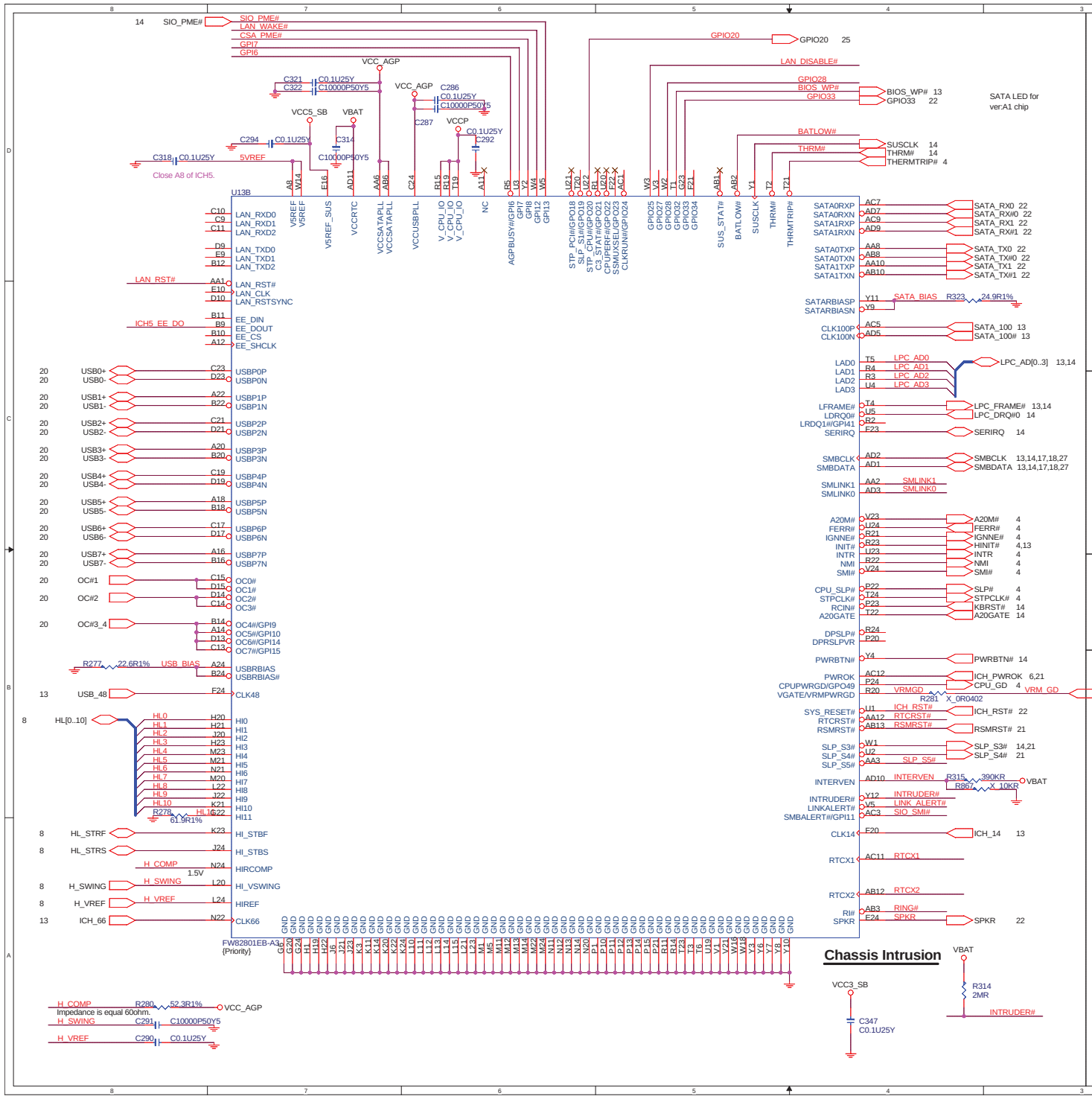

STRAPS

HI:NO REBOOT
SPKR R279 X_1K VCC3

RESERVED
ICH5_EE_DO R322 X_10K

HI:enable ASF
LINK_ALERT# R351 10KR VCC3_SB

VCC3_SB
R341 10KR
LAN_WAKE#

THRM# R362 4.7KR VCC3
VRMGD R282 4.7KR
ICH_PWROK R274 10KR
Prevent excessive IccRTC leakage

GPIO28 R353 X_10K VCC3_SB
R344 1KR
Reservered GPI

FERR# R283 62R VCCP
THERMTRIP# R284 62R

SMBCLK R346 X_2.7KR VCC3_SB
SMBDATA R345 X_2.7KR

RN79 8P4R-10KR
SIO_SMI# 1 2
RING# 3 4
BATLOW# 5 6
7 8
VCC3_SB

CSA_PME# R354 10KR
PWRBTN# R343 X_1K internal pull up 20K
LAN_DISABLE# R342 1KR default is high

SMLINK1 R355 10KR
SMLINK0 R352 10KR

ICH_RST# 1 2
SIO_PME# 3 4
GPI7 5 6
GPI6 7 8
RN78 8P4R-10KR

SLP_S5# R884 X_10K VCC3_SB

RESUME RESET

LAN_RST# R430 1KR

GPIO33 R913 X_1K VCC3

VCC5_SB
R267 4.7KR
RSMRST#
C282 X_0.1u
R273 10KR
Prevent excessive IccRTC leakage

V5REF Sequencing Circuit

V5REF must be powered up before VCC3,or after within 0.7V

D19
VCC3 5VREF R349 1KR VCC5
S-1N5817_DO214AC
C345 C1U16Y0805

RTC BLOCK

* Put a GND Plane under X'TAL
* Please put this block close ICH5

CLR_CMOS	
1 - 2	Normal *
2 - 3	Clear CMOS

VCC3_SB D23 1N4148_SOD123 VBAT
The RC delay time should be in 10~20ms.
VBAT0 1KR R403
R409 180KR
J_RTCRST# RTCRST# JBAT1 H1X3_black
C383 C1U16Y0805
C389 C0.1U25Y
R417 100R
D22 S-BAT54A_SOT23
R412 1KR
BAT1 BAT-2P_SO41
R321 10MR RTCX1 RTCX2
X2 32.768KHZ12.5P_D
C317 C18P50N
C320 C18P50N

MICRO-STAR INt'L CO., LTD.

Title: Intel ICH5 - Other Signals

Size	Document Number	Rev
	MS-6788	10A

Date: Wednesday, September 22, 2004 Sheet 12 of 29

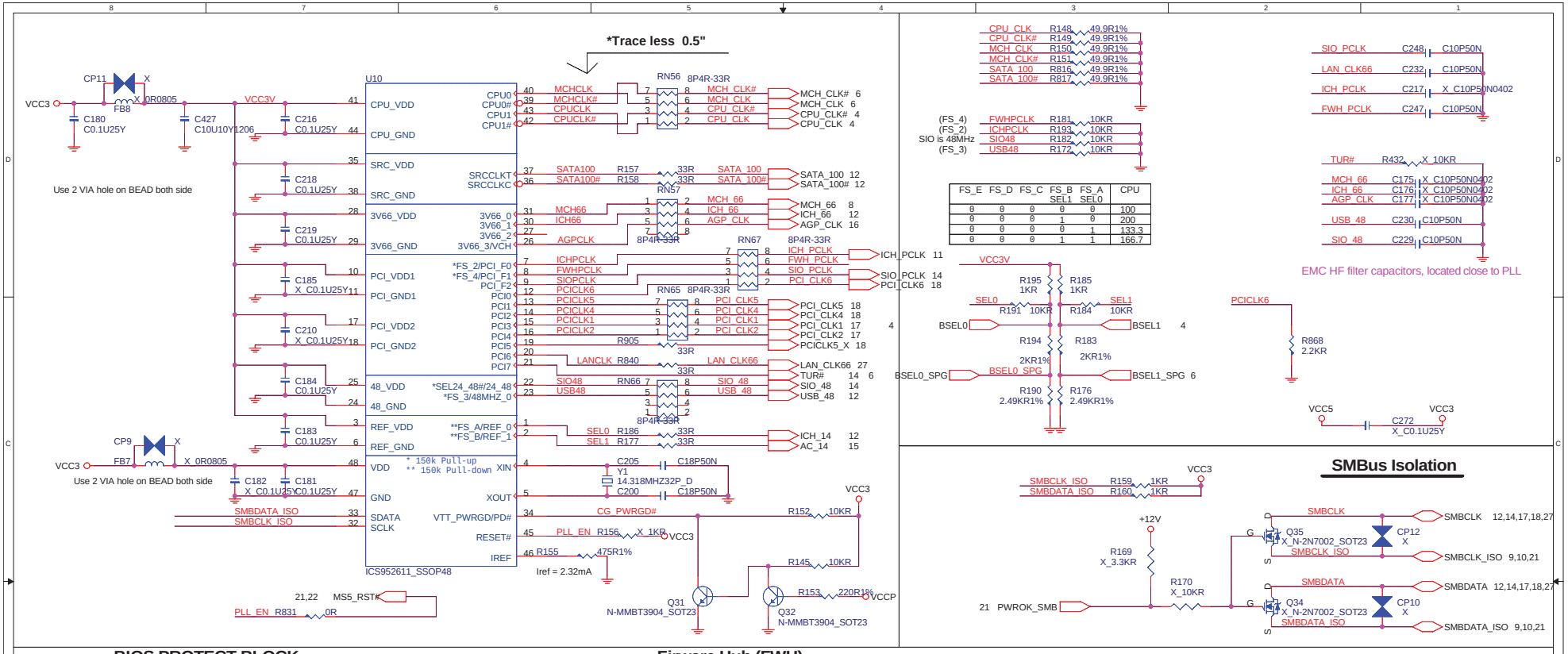

BIOS PROTECT BLOCK

BIOS Update Config.		
HIGH	Un_protected	
LOW	Protected	Default

Firware Hub (FWH)

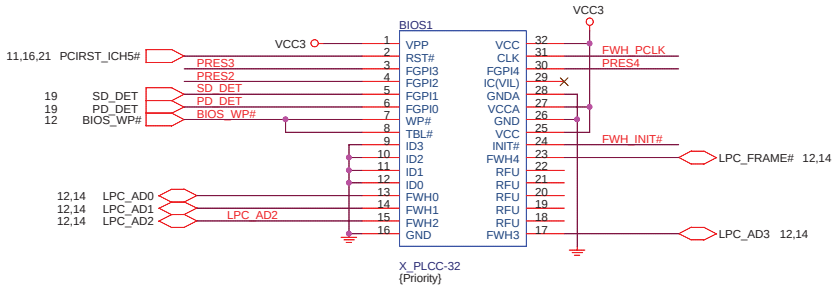

FLOPPY CONNECTOR

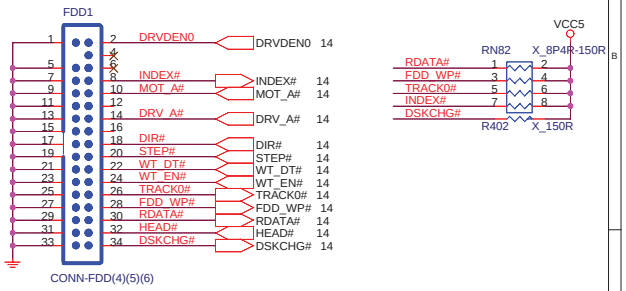

FWH DECOUPLING CAPACITORS

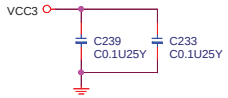

Place Cap. as Close to FWH< 350 mil

FWH Resistors

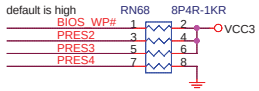

INIT signal voltage translation

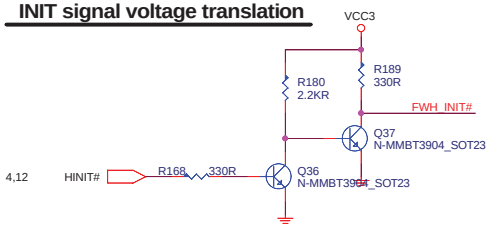

Placement check to this page

MICRO-STAR INt'L CO., LTD.

Title	ICS952619 & FWH & FDD	
Size	Document Number MS-6788	Rev 10A
Date: Wednesday, September 22, 2004	Sheet 13 of 29	

LPC SUPER I/O W83627HF/NHF/THF

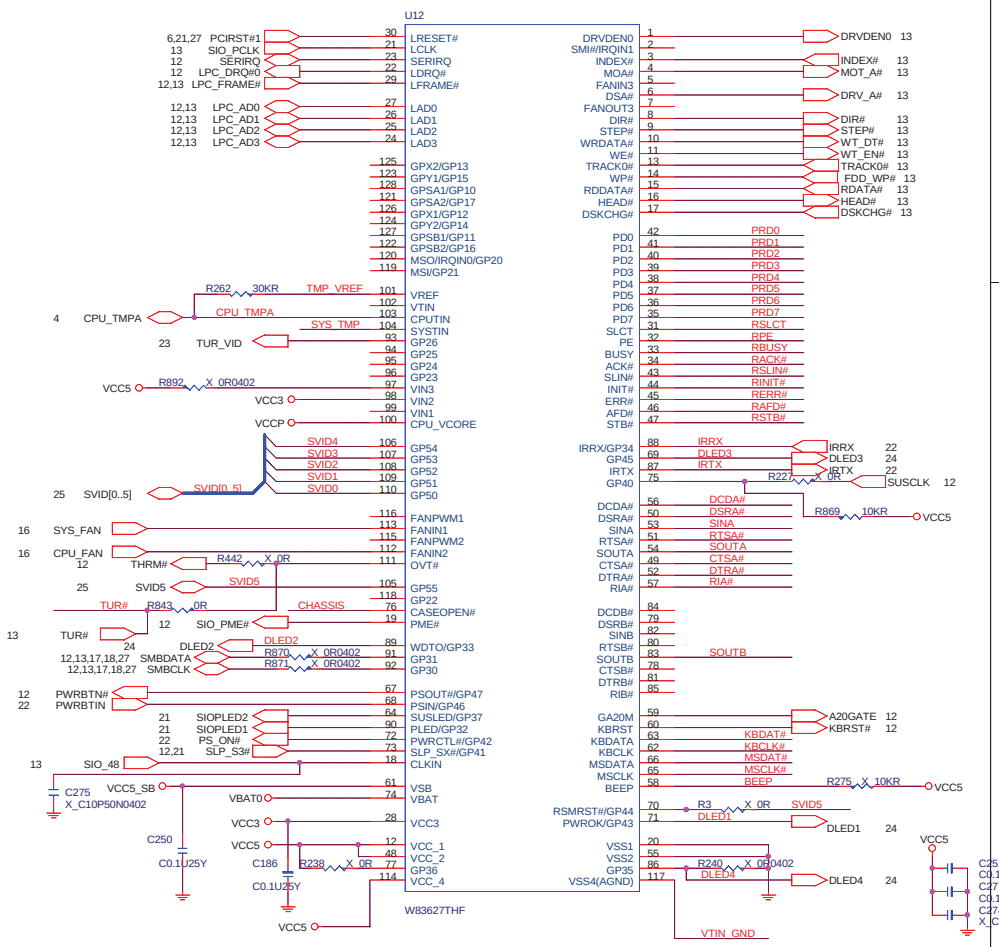

SERIAL PORT 1

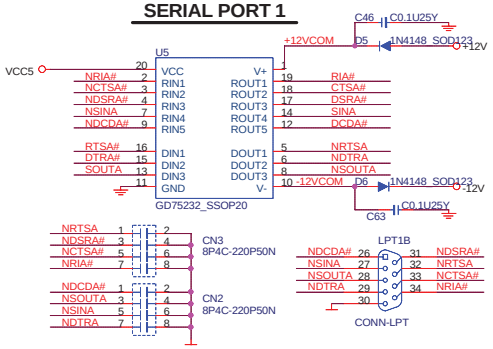

PARALLAL PORT

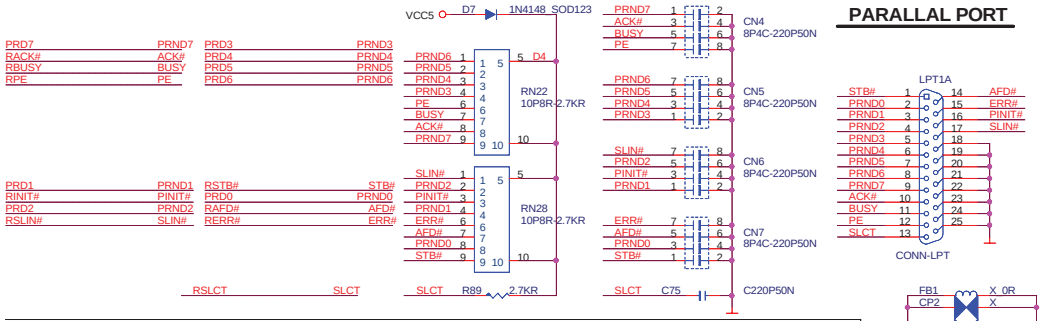

PS2 KEYBOARD & MOUSE CONNECTOR

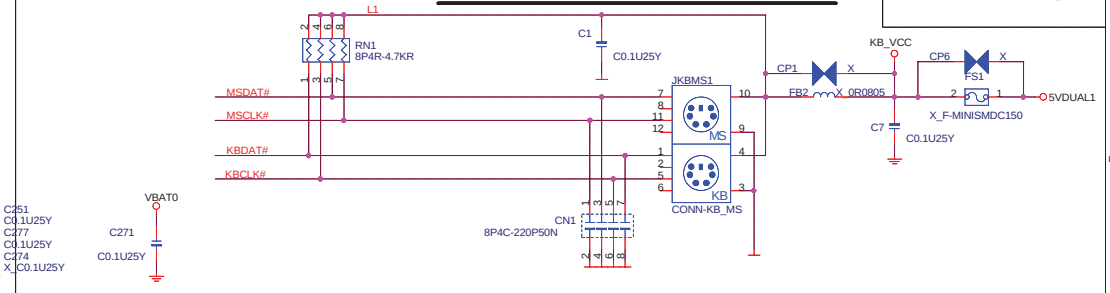

LPC I/O STRAPPING RESISTOR

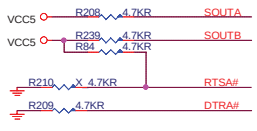

SOUTA	L: Disable KBC	H: Enable KBC
SOUTB	L: 24MHZ	H: 48MHZ
RTSA#	L: CFAD=2E	H: CFAD=4E
DTRA#	L: PNP Default	H: PNP no Default

Chasiss Intrusion

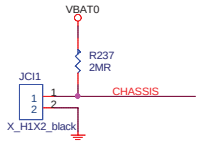

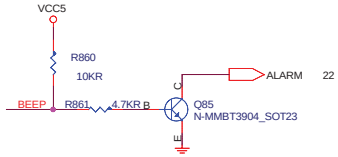

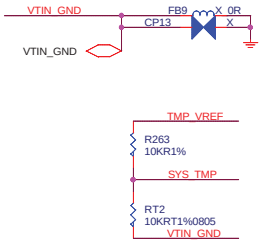

NOTE: LOCATE CLOSE STATUS PANEL

MICRO-STAR INt'L CO., LTD.

Title: LPC SUPER I/O & CONNECTORS

Size | Document Number: MS-6788 | Rev: 10A

Date: Wednesday, September 22, 2004 | Sheet 14 of 29

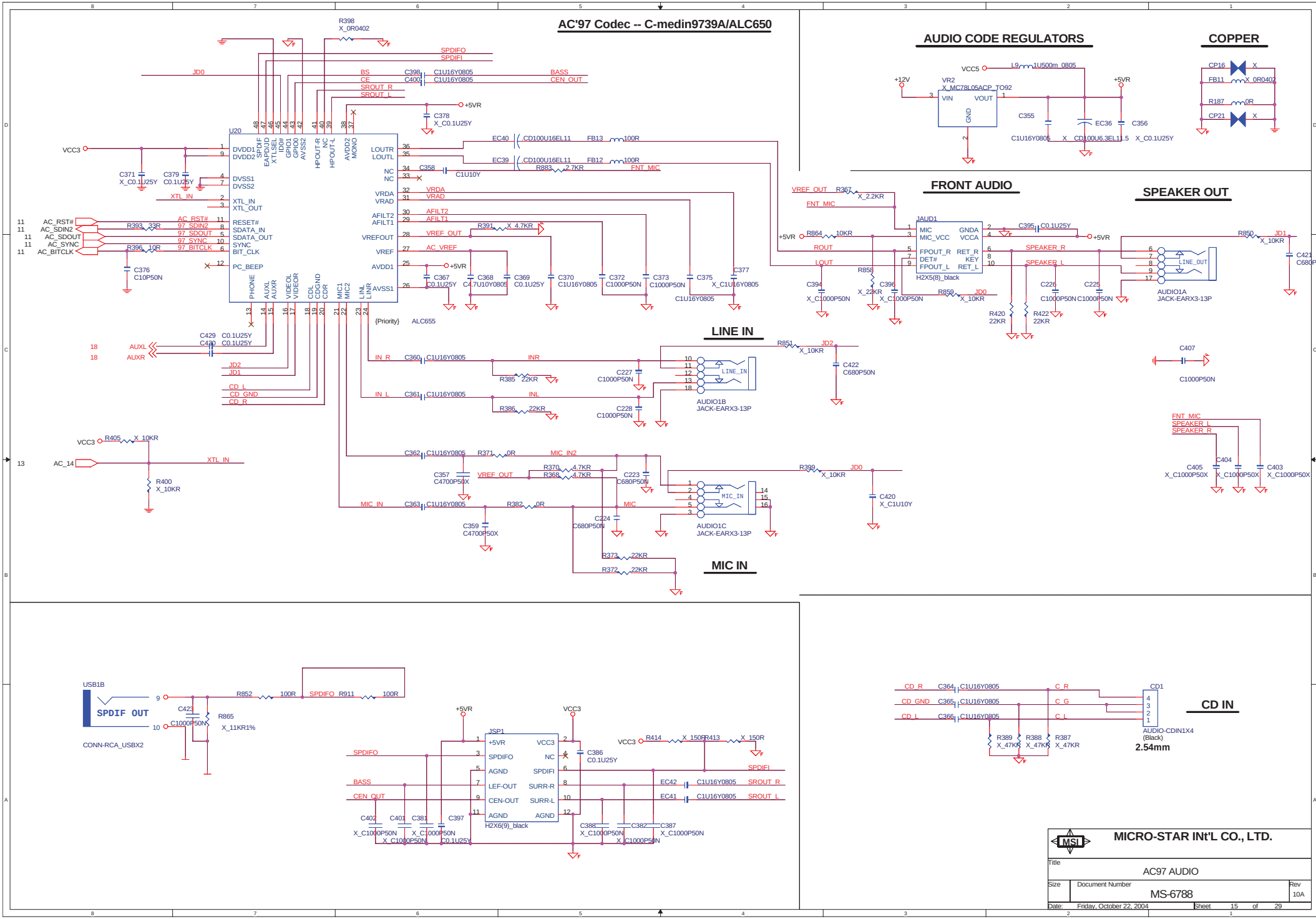
AC'97 Codec -- C-medin9739A/ALC650
AUDIO CODE REGULATORS
COPPER
FRONT AUDIO
SPEAKER OUT
LINE IN
MIC IN
CD IN
SPDIF OUT
U20
ALC655
JAUD1
H2X5(8)_black
AUDIO1A
JACK-EARX3-13P
AUDIO1B
JACK-EARX3-13P
AUDIO1C
JACK-EARX3-13P
USB1B
CONN-RCA_USBX2
JSP1
H2X6(9)_black
CD1
AUDIO-CDIN1X4
(Black)
2.54mm
MICRO-STAR INt'L CO., LTD.
Title
AC97 AUDIO
Size
Document Number
MS-6788
Rev
10A
Date: Friday, October 22, 2004
Sheet 15 of 29

AGP 1.5V 4X/8X SLOT(AGP VER:3.0)

VCC5 = 60mils trace / 15 mils space

AGP Slot Imax	
VCCq	2.0A
VCC3	6.0A
VCC12	1.0A
VCC5	2.0A
VCC3_SB	0.75A

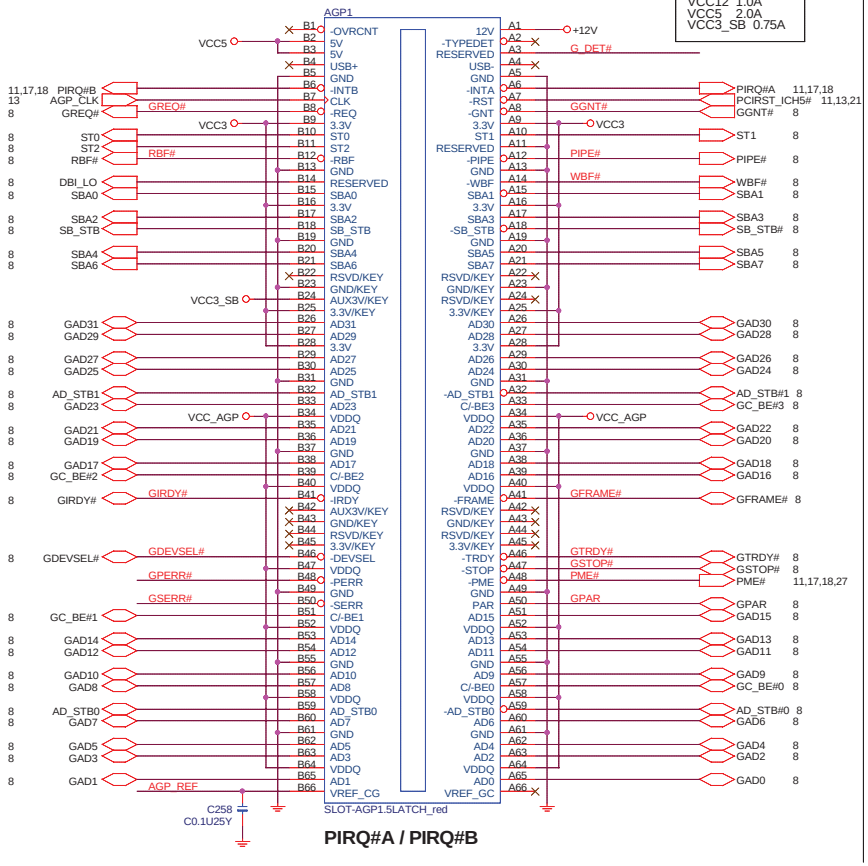

CPU FAN

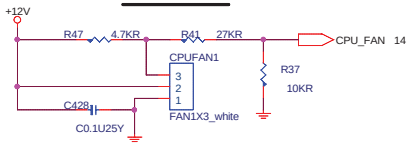

SYSTEM FAN

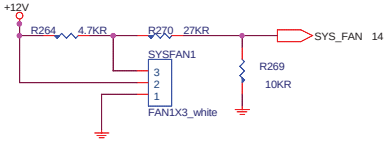

Springdale Reference & Swing Voltage Circuit

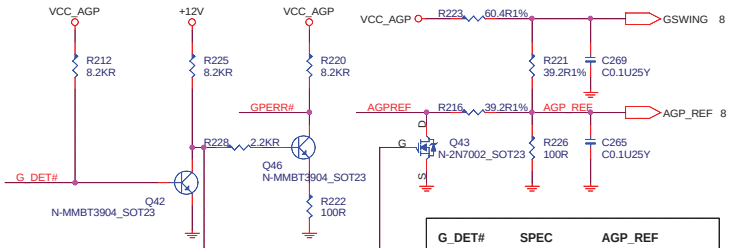

G_DET#	SPEC	AGP_REF
FLOATING	AGP2.0	0.75V>0.55V
LOW	AGP3.0	0.35V<0.55V

AGP TERMINATION RESISTORS

AGP SLOT DECOUPLING CAPACITORS

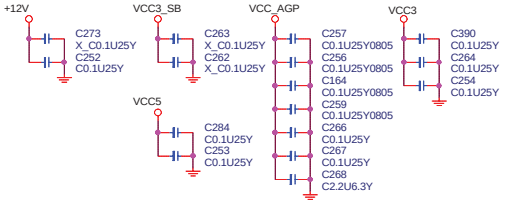

MSI	MICRO-STAR INt'L CO., LTD.	
Title	AGP 1.5V SLOT & FAN	
Size	Document Number MS-6788	Rev 10A
Date: Friday, June 04, 2004	Sheet 16 of 29	

PCI SLOT 1 (PCI VER: 2.2 COMPLY)

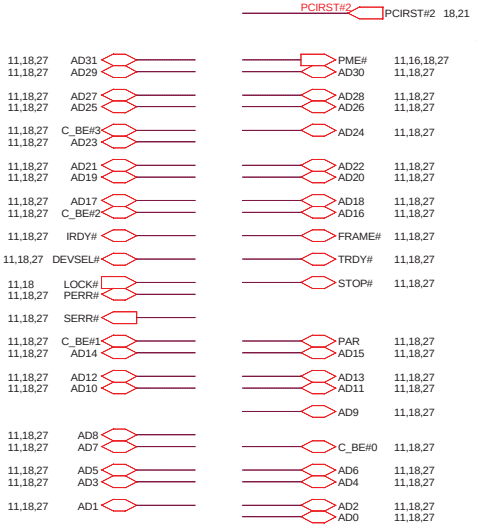

PCI SLOT 2 (PCI VER: 2.2 COMPLY)

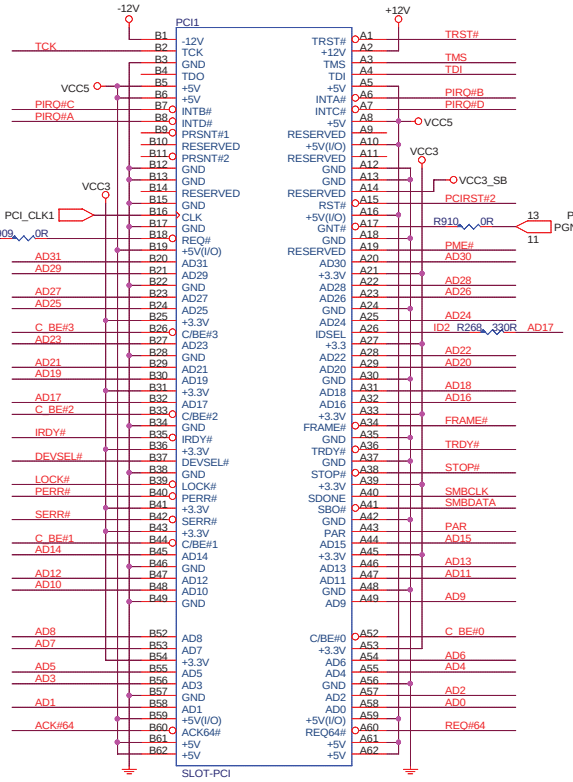

PCI SLOT 3 (PCI VER: 2.2 COMPLY)

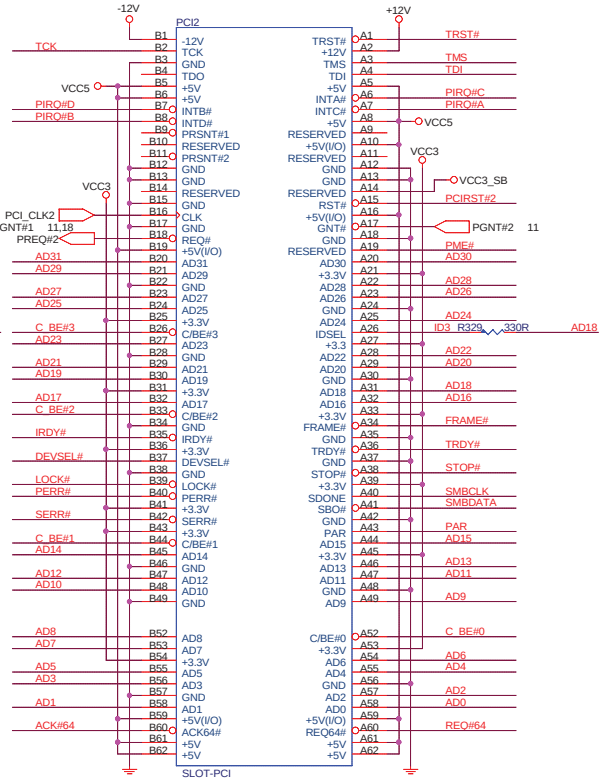

IDSEL = AD16
MASTER = PREQ#0
PIRQ#A

IDSEL = AD17
MASTER = PREQ#1
PIRQ#B

IDSEL = AD18
MASTER = PREQ#2
PIRQ#C

PCI PULL-UP / DOWN RESISTORS

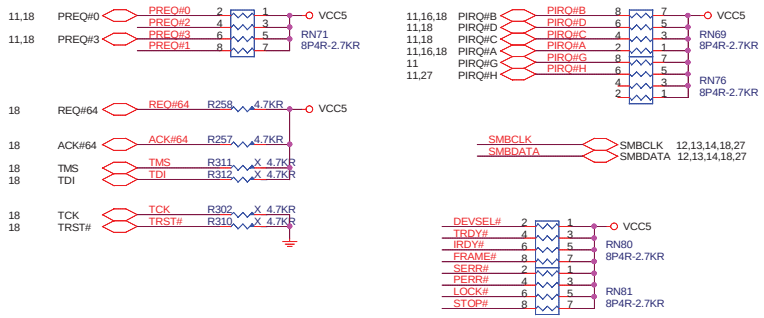

PCI SLOT DECOUPLING CAPACITORS

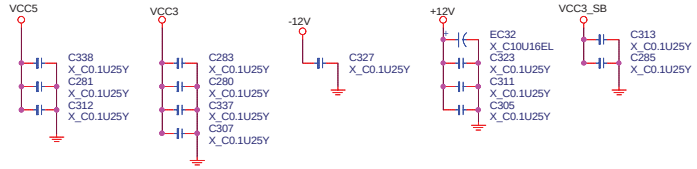

MSI	MICRO-STAR INt'L CO., LTD.		
Title	PCI 1& 2 & 3 Slots		
Size	Document Number	MS-6788	Rev 10A
Date: Wednesday, September 22, 2004	Sheet 17 of 29		

PCI SLOT 4 (PCI VER: 2.2 COMPLY)

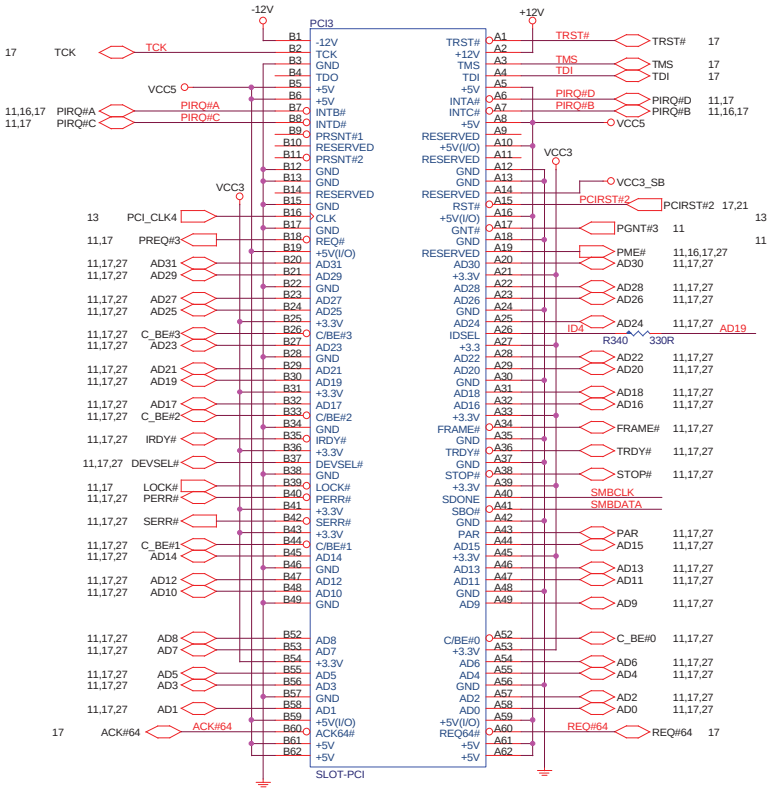

IDSEL = AD19
MASTER = PREQ#3
PIRQ#D

PCI SLOT 5 (PCI VER: 2.2 COMPLY)

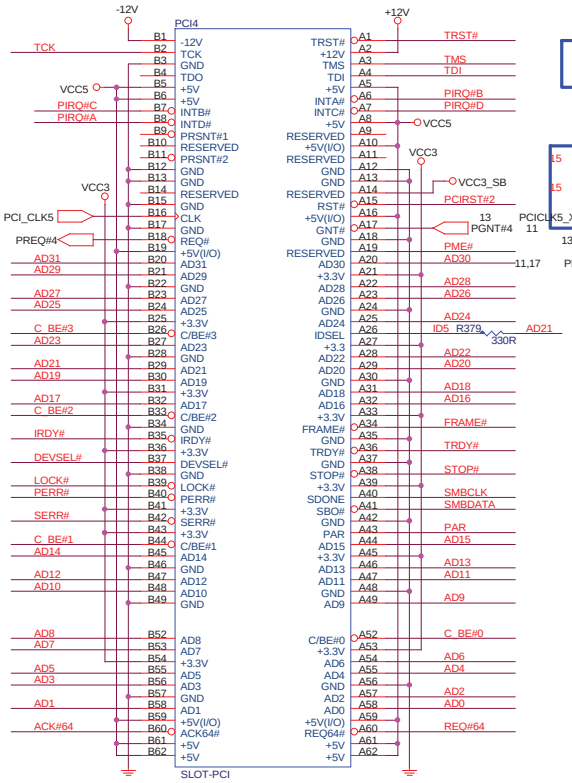

IDSEL = AD21
MASTER = PREQ#4
PIRQ#B

PCI SLOT 6 (PCI VER: 2.2 COMPLY)

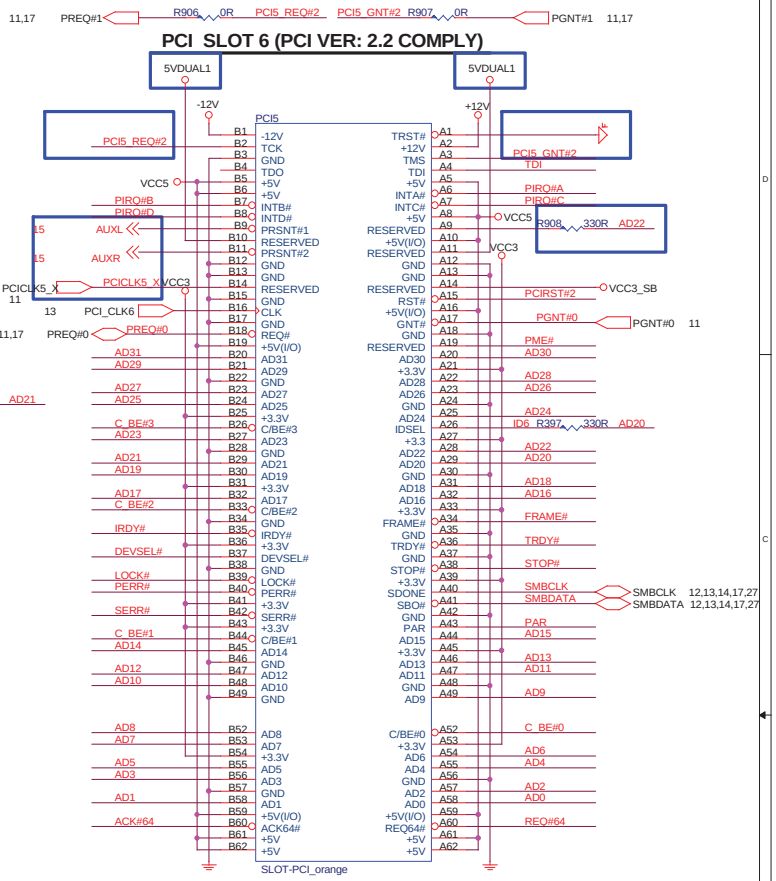

IDSEL = AD20
MASTER =PREQ#A
PIRQ#A

MICRO-STAR INt'L CO., LTD.

Title	PCI 4 & 5 Slots	
Size	Document Number MS-6788	Rev 10A
Date: Friday, June 04, 2004	Sheet 18 of 29	

PRIMARY IDE BLOCK

ATA 33/66/100 IDE Connectors

SECONDARY IDE BLOCK

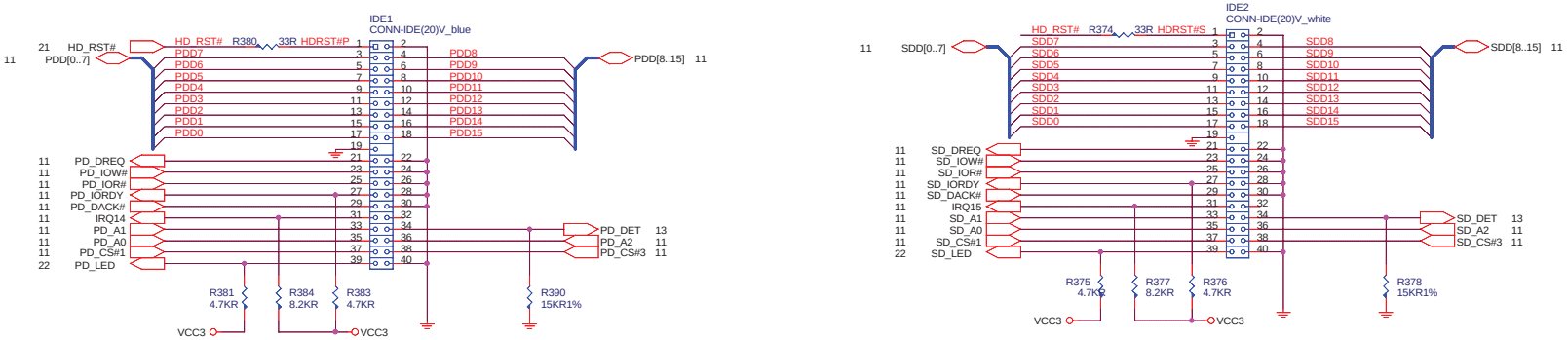

MICRO-STAR INt'L CO., LTD.	
Title	ATA33/66/100 IDE & VIDEO Connectors
Size	Document Number: MS-6788 — Rev 10A
Date: Friday, June 04, 2004	Sheet 19 of 29

POWER CIRCUIT FOR USB PORT 4,5,6,7

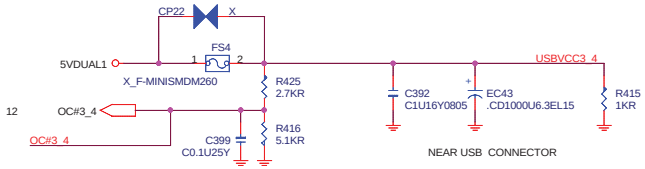

REAR PANEL USB CONNECTOR FOR USB PORT 4,5,6,7

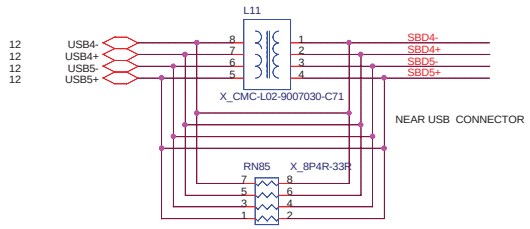

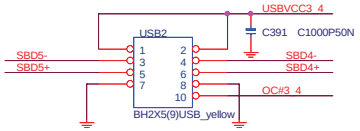

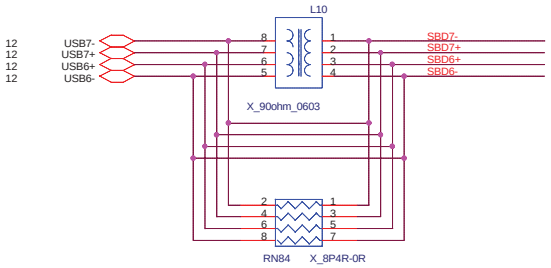

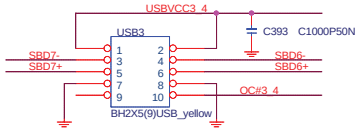

POWER CIRCUIT FOR USB PORT 2,3

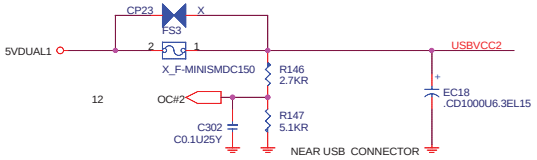

REAR PANEL USB CONNECTOR FOR USB PORT 2,3

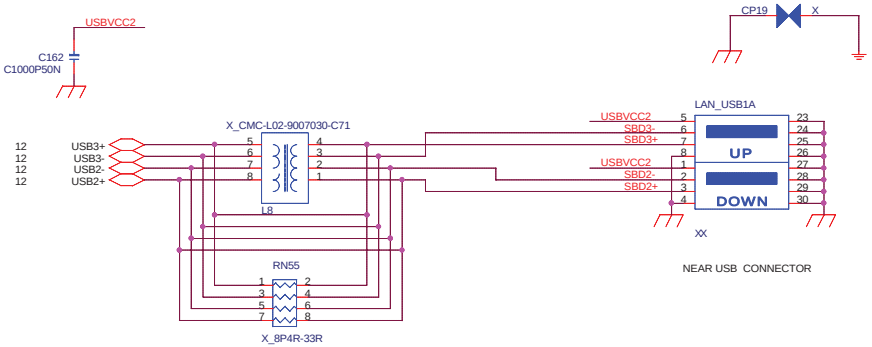

POWER CIRCUIT FOR USB PORT0,1

REAR PANEL USB CONNECTOR FOR USB PORT 0,1

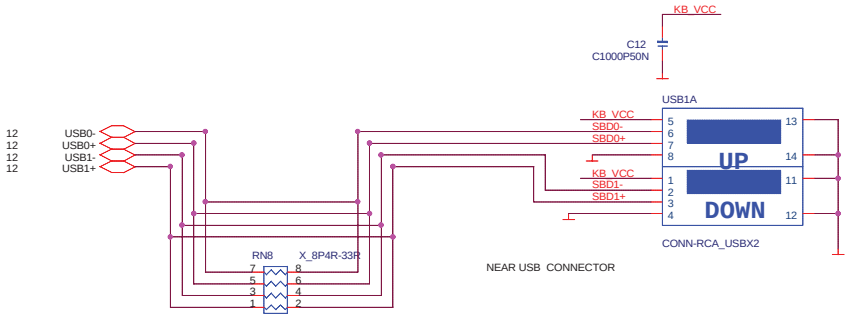

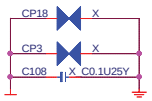

MICRO-STAR INt'L CO., LTD.

Title	USB Connectors	
Size	Document Number MS-6788	Rev 10A
Date: Friday, June 04, 2004	Sheet 20 of 29	

ACPI Controller

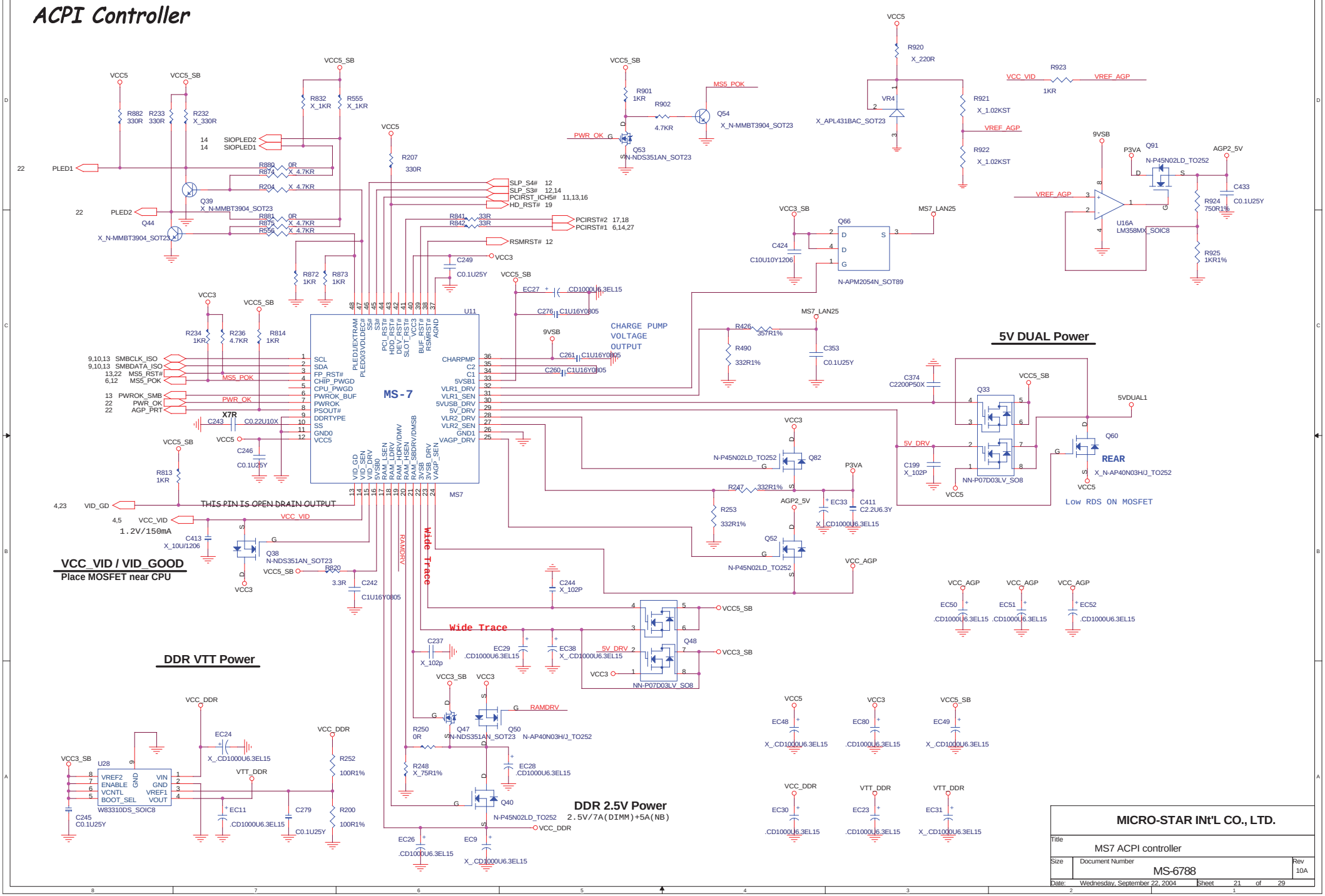

ATX Connector

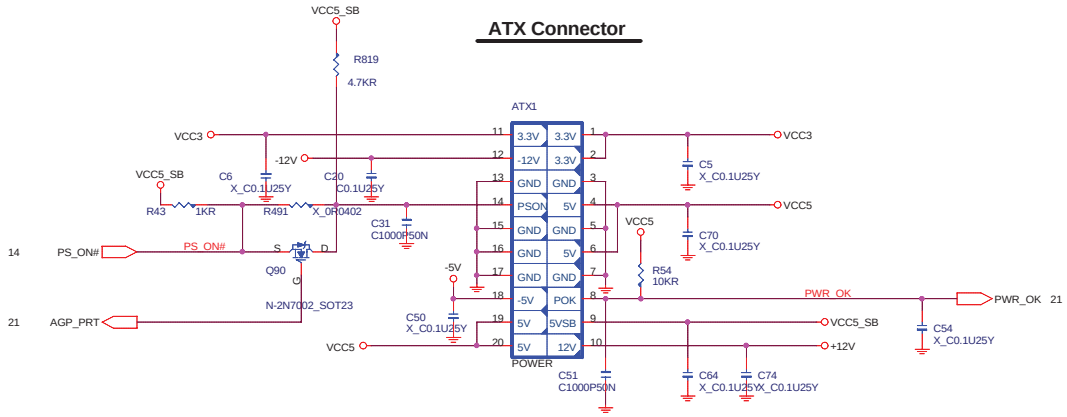

IR Connector

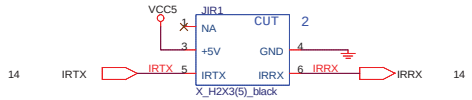

SATA CONNECTOR

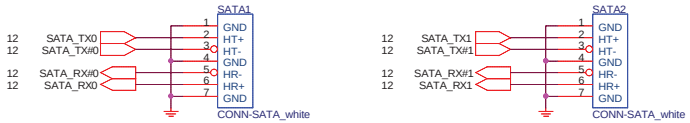

INTEL/PB Front Panel Connector

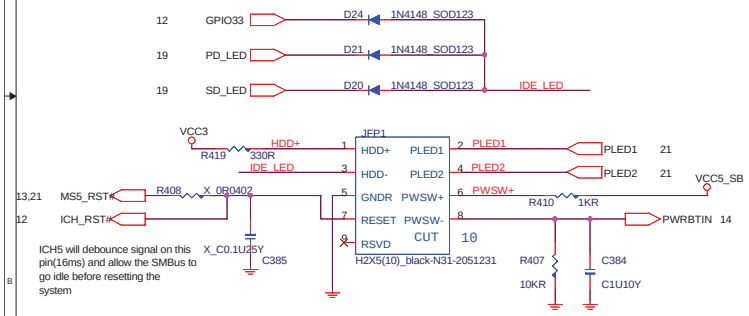

MSI Front Panel Connector

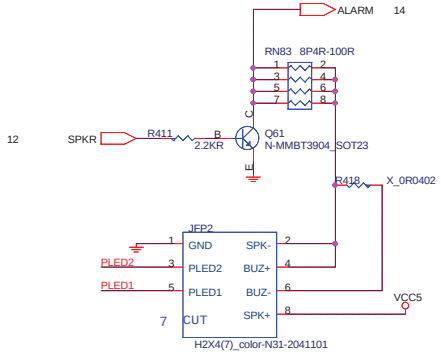

Intel reference GMCH VTT power cirucit

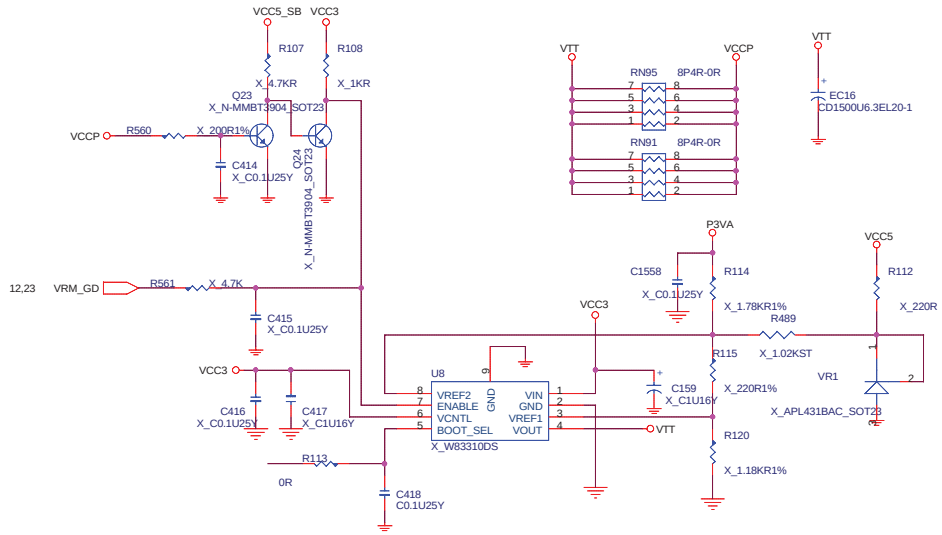

BOOT		CPU	Voltage
LOW		Northwood	1.45V
HIGH		Prescott	1.225V

MICRO-STAR INt'L CO., LTD.

Title: ATX Connector & Front Panel

Size | Document Number: MS-6788 | Rev: 10A

Date: Wednesday, September 22, 2004 | Sheet 22 of 29

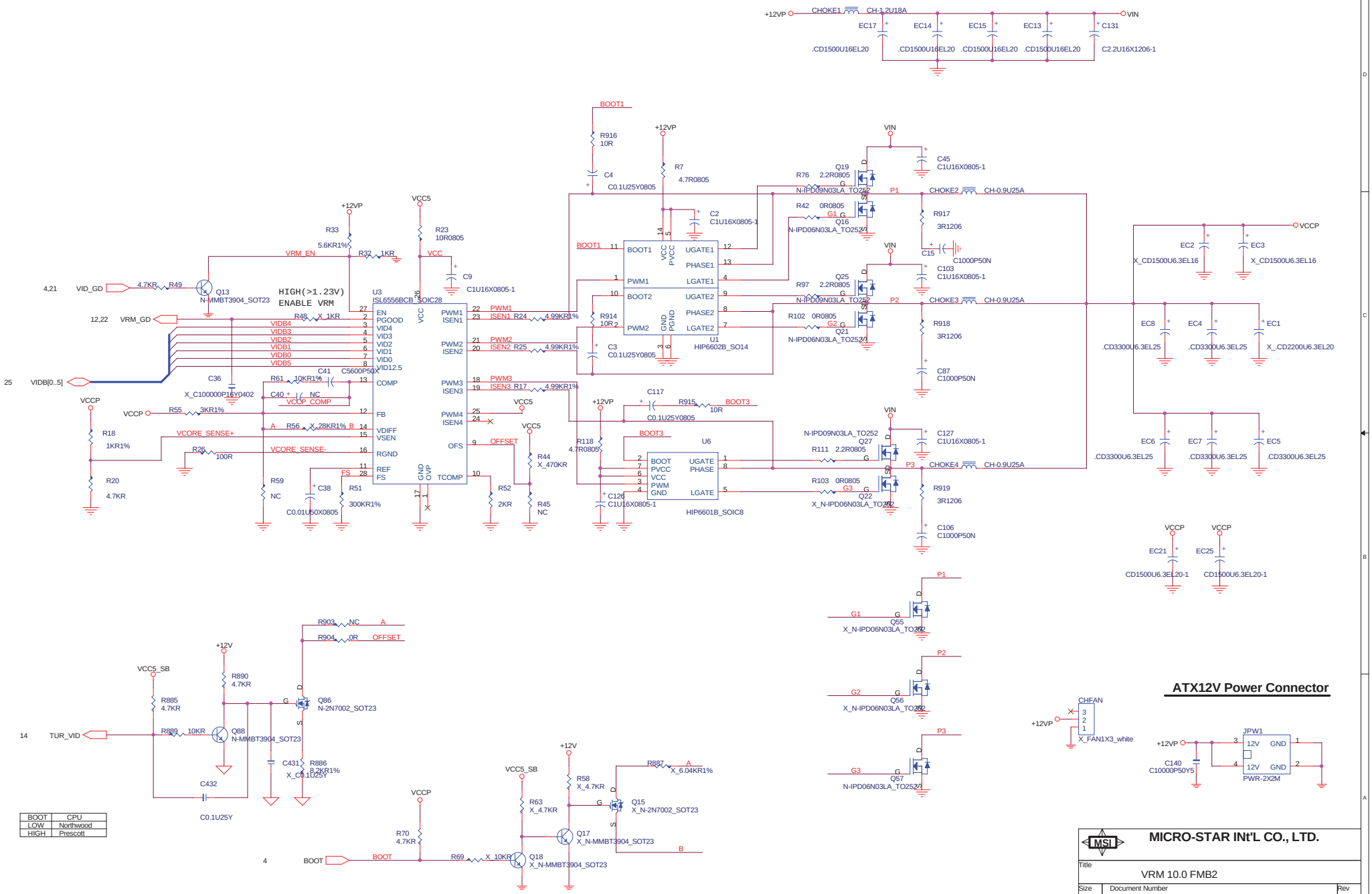
ATX12V Power Connector
MICRO-STAR INt'L CO., LTD.
Title
VRM 10.0 FMB2
Size
Document Number
MS-6788
Rev
10A
Date: Friday, June 04, 2004
Sheet 23 of 29
U3
ISL6556BCB_SOIC28
U1
HIP6602B_SO14
U6
HIP6601B_SOIC8
HIGH(>1.23V)
ENABLE VRM
VID_GD
VRM_GD
VIDB[0..5]
VRM_EN
VCORE_SENSE+
VCORE_SENSE-
VCCP_COMP
OFFSET
TUR_VID
BOOT
CHOKE1 CH-1.2U18A
CHOKE2 CH-0.9U25A
CHOKE3 CH-0.9U25A
CHOKE4 CH-0.9U25A
Q19 N-IPD09N03LA_TO252
Q16 N-IPD06N03LA_TO252
Q25 N-IPD09N03LA_TO252
Q21 N-IPD06N03LA_TO252
Q27 N-IPD09N03LA_TO252
Q22 X_N-IPD06N03LA_TO252
Q55 X_N-IPD06N03LA_TO252
Q56 X_N-IPD06N03LA_TO252
Q57 N-IPD06N03LA_TO252
Q13 N-MMBT3904_SOT23
Q86 N-2N7002_SOT23
Q88 N-MMBT3904_SOT23
Q15 X_N-2N7002_SOT23
Q17 X_N-MMBT3904_SOT23
Q18 X_N-MMBT3904_SOT23
CHFAN
X_FAN1X3_white
JPW1
PWR-2X2M
BOOT | CPU
LOW | Northwood
HIGH | Prescott

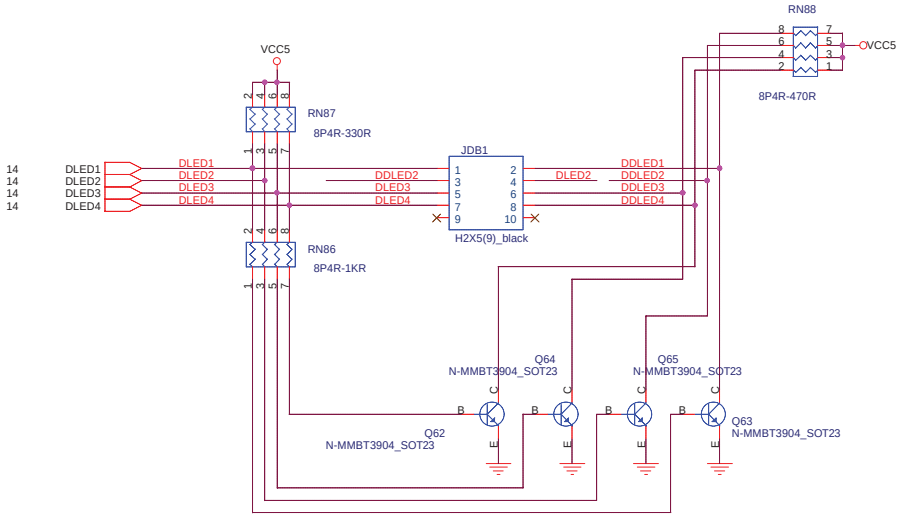

MICRO-STAR INt'L CO., LTD.

Title: DLED BRACKET

Size | Document Number: MS-6788 | Rev: 10A

Date: Wednesday, September 22, 2004 | Sheet 24 of 29

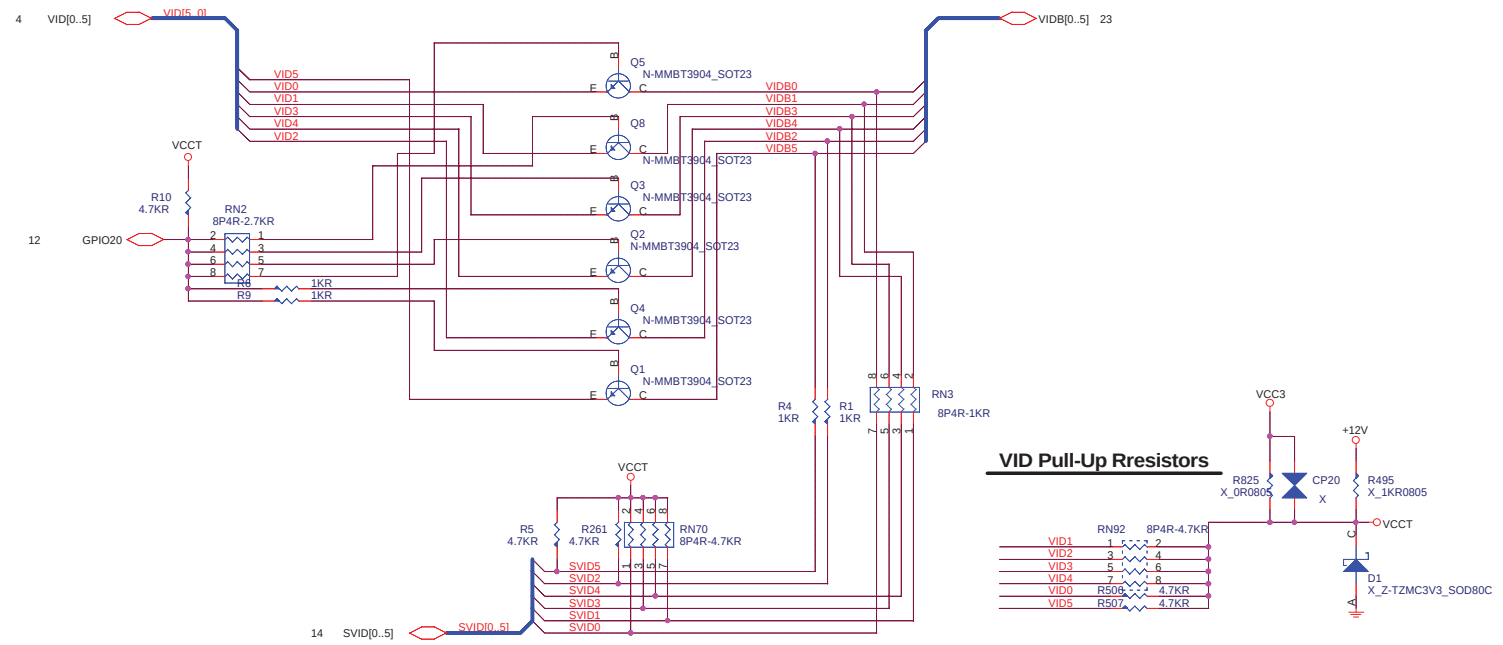

VID Pull-Up Rresistors

MICRO-STAR INt'L CO., LTD.		
Title: VID Adjust		
Size	Document Number: MS-6788	Rev: 10A
Date: Wednesday, September 22, 2004	Sheet 25 of 29	

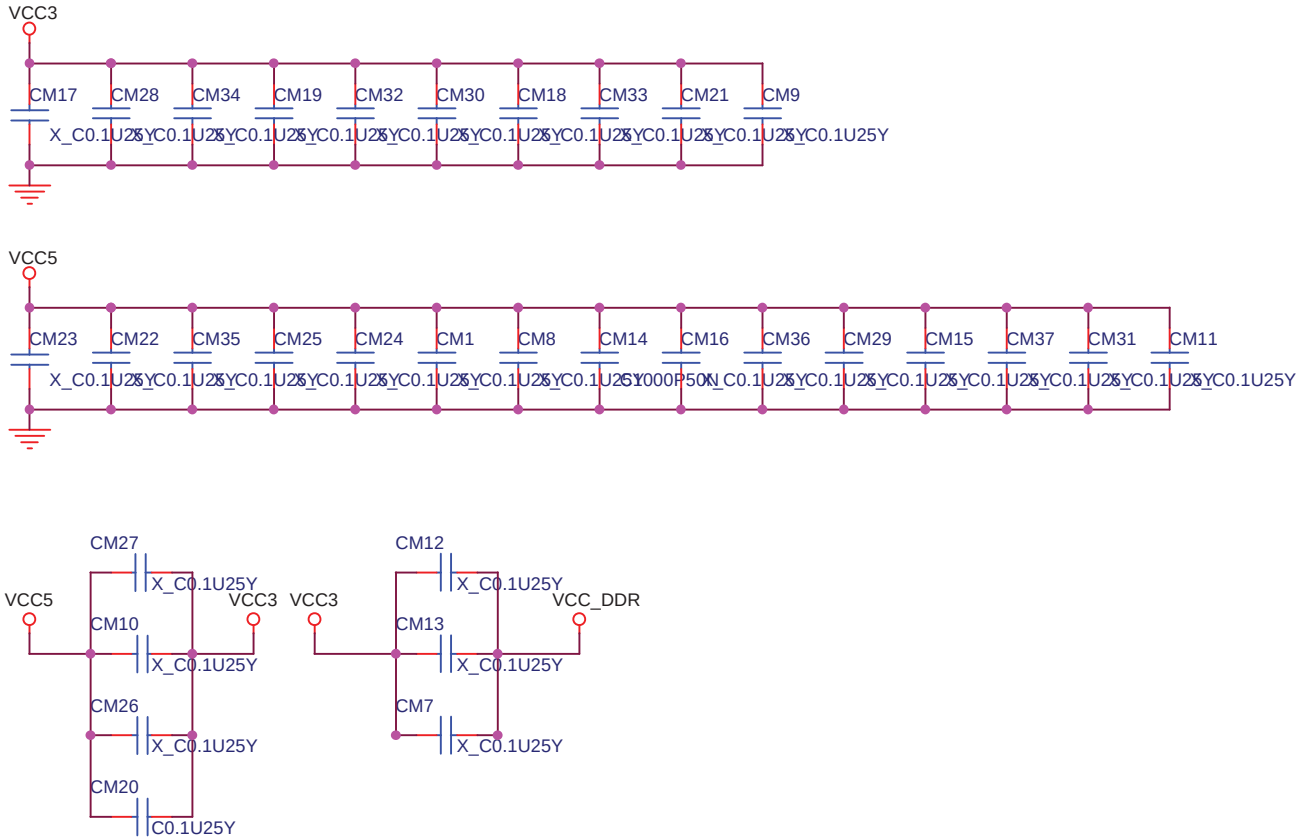

MICRO-STAR INt'L CO., LTD.

Title	EMI PART	
Size	Document Number MS-6788	Rev 10A
Date: Thursday, January 08, 2004	Sheet 26 of 29	

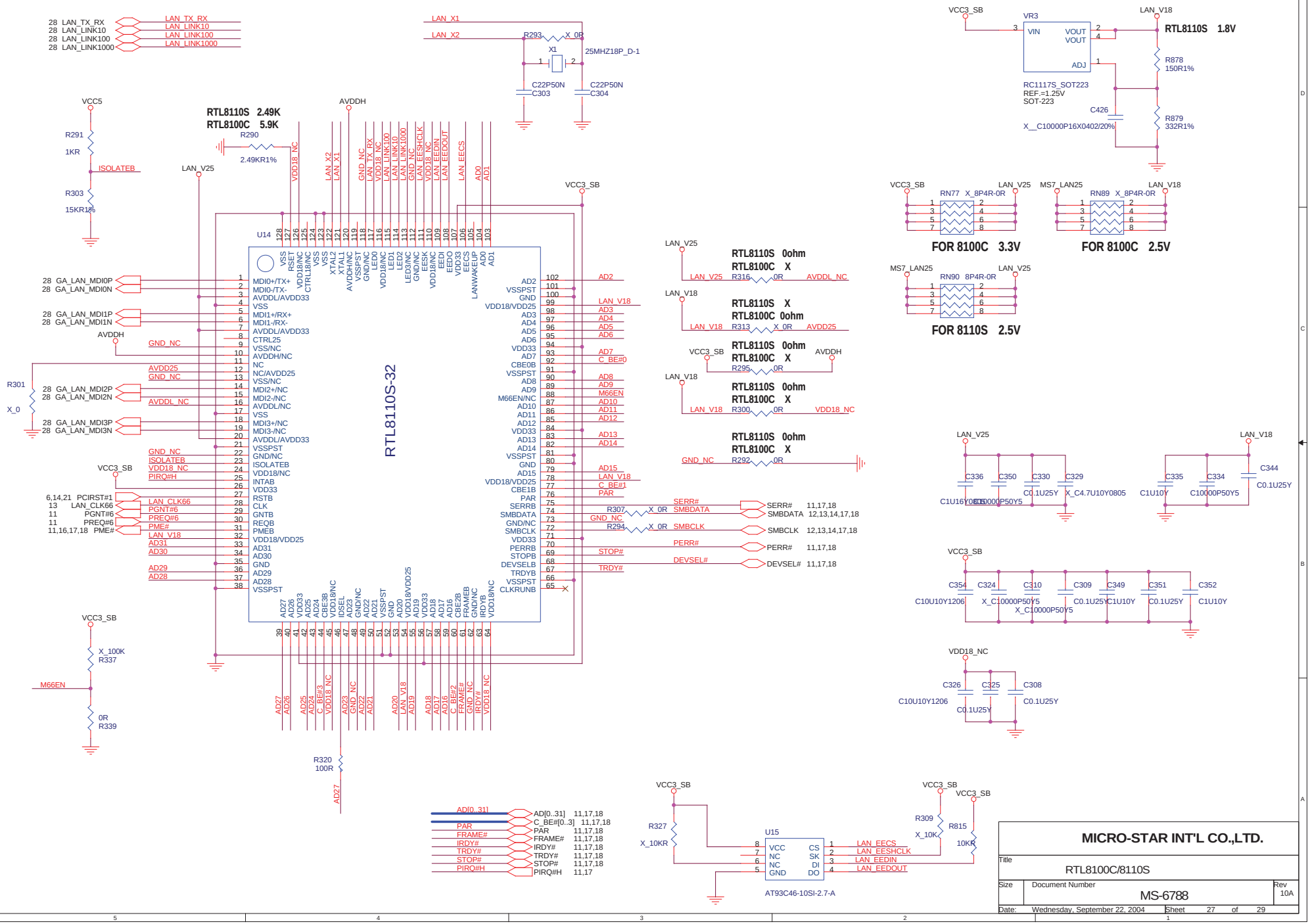
RTL8110S-32
U14
RTL8110S 2.49K
RTL8100C 5.9K
R290
2.49KR1%
VCC5
R291
1KR
ISOLATEB
R303
15KR1%
AVDDH
LAN_V25
VCC3_SB
R301
X_0
M66EN
X_100K
R337
0R
R339
R320
100R
LAN_X1
LAN_X2
R293
X_0R
X1
25MHZ18P_D-1
C22P50N
C303
C304
VR3
VIN
VOUT
ADJ
RC1117S_SOT223
REF.=1.25V
SOT-223
LAN_V18
RTL8110S 1.8V
R878
150R1%
C426
X__C10000P16X0402/20%
R879
332R1%
RN77 X_8P4R-0R
FOR 8100C 3.3V
MS7_LAN25
RN89 X_8P4R-0R
FOR 8100C 2.5V
RN90 8P4R-0R
FOR 8110S 2.5V
RTL8110S 0ohm
RTL8100C X
LAN_V25 R316 0R AVDDL_NC
LAN_V18 R313 X_0R AVDDL25
VCC3_SB R295 0R AVDDH
LAN_V18 R300 0R VDD18_NC
GND_NC R292 0R
RTL8110S X
RTL8100C 0ohm
C336
C350
C330
C329
C1U16Y0603
C10000P50Y5
C0.1U25Y
X_C4.7U10Y0805
C335
C334
C344
C1U10Y
C0.1U25Y
C354
C324
C310
C309
C349
C351
C352
C10U10Y1206
X_C10000P50Y5
C1U10Y
C326
C325
C308
C10U10Y1206
C0.1U25Y
R307
X_0R
SMBDATA
R294
X_0R
SMBCLK
SERR#
PERR#
STOP#
DEVSEL#
TRDY#
SERR# 11,17,18
SMBDATA 12,13,14,17,18
SMBCLK 12,13,14,17,18
PERR# 11,17,18
DEVSEL# 11,17,18
AD[0..31] 11,17,18
C_BE#[0..3] 11,17,18
PAR 11,17,18
FRAME# 11,17,18
IRDY# 11,17,18
TRDY# 11,17,18
STOP# 11,17,18
PIRQ#H 11,17
R327
X_10KR
U15
VCC
NC
GND
CS
SK
DI
DO
AT93C46-10SI-2.7-A
LAN_EECS
LAN_EESHCLK
LAN_EEDIN
LAN_EEDOUT
R309
X_10K
R815
10KR
MICRO-STAR INT'L CO.,LTD.
Title
RTL8100C/8110S
Size
Document Number
MS-6788
Rev
10A
Date: Wednesday, September 22, 2004
Sheet 27 of 29

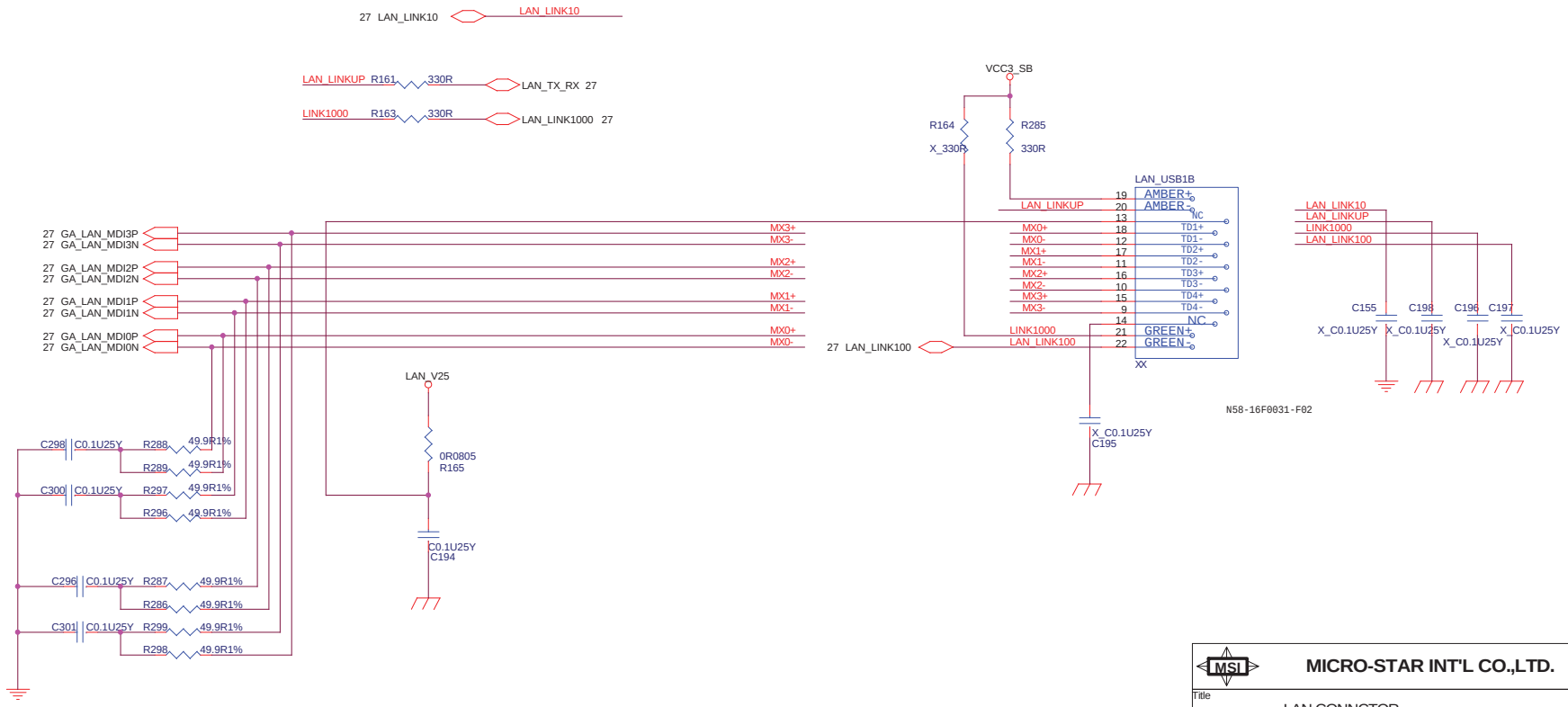

MICRO-STAR INT'L CO.,LTD.

Title	LAN CONNCTOR	
Size	Document Number: MS-6788	Rev 10A
Date: Friday, June 04, 2004	Sheet 28 of 29	

Jumper Setting & Connector Setting

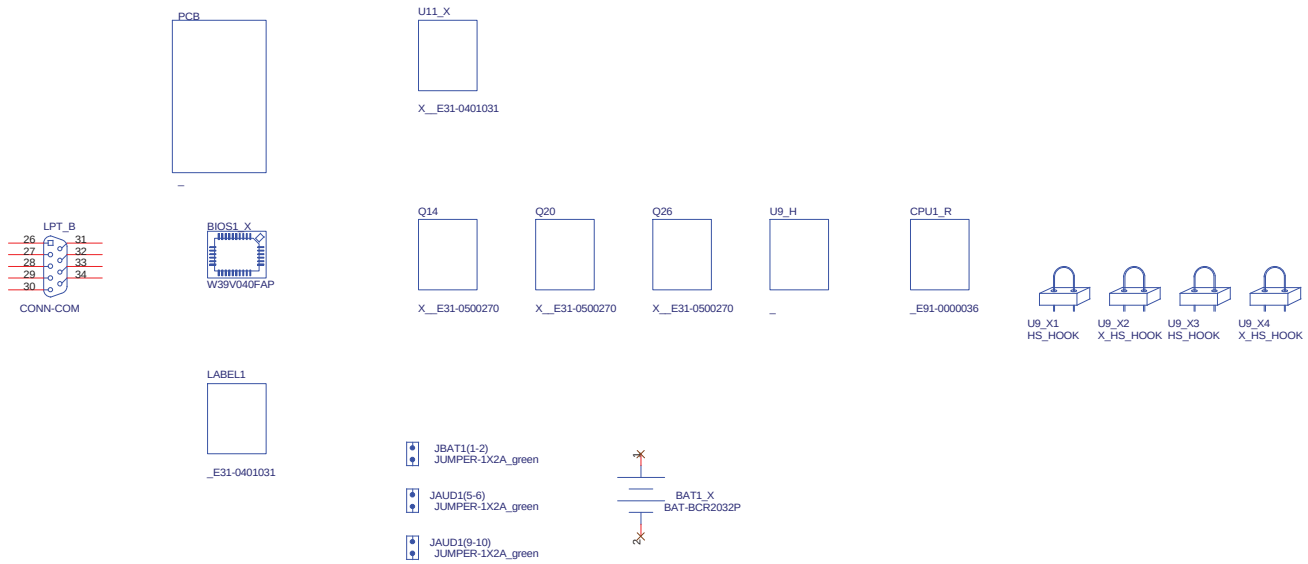

MICRO-STAR INt'L CO., LTD.		
Title	BOM PART	
Size	Document Number MS-6788	Rev 10A
Date: Wednesday, September 22, 2004	Sheet 29 of 29	