MS-6785 Ver:101

CPU:
Pentium4 socket-478 Processor

System Chipset:
SIS648FX(NB) + SIS963(SB)

On Board Function Chip:
LPC I/O-W83697HF
IEEE1394 AGERE-FW803
LAN-VIA VT6103
Audio Codec-CMEDIA 9739A

Expansion Slot:
AGP3.0 Slot*1
PCI2.2 Slot*3
MINIPCI Slot*1

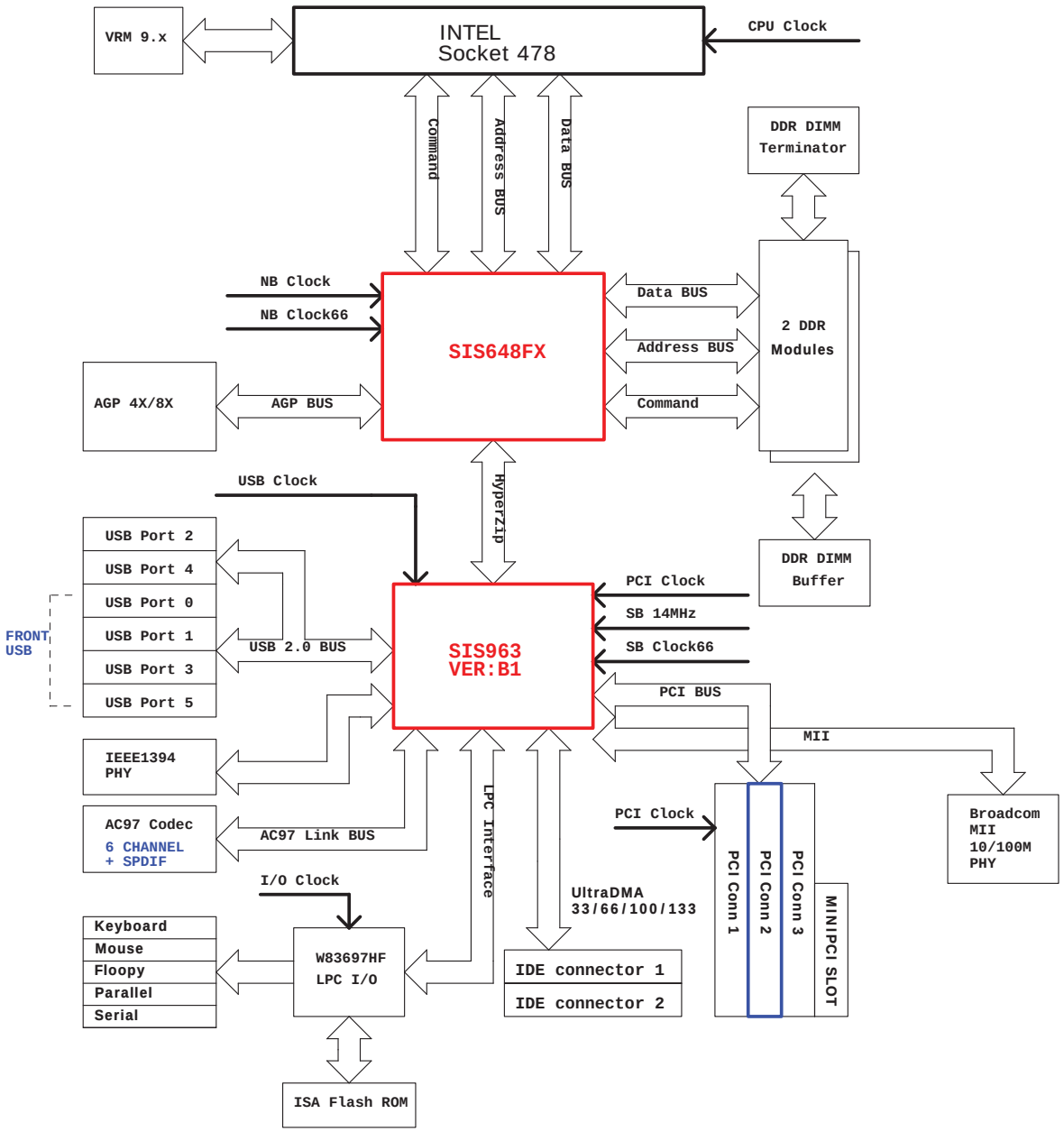

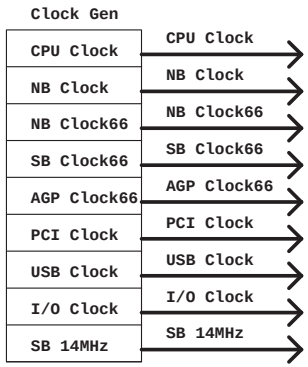

CONTENT
01-Block drigrame & Cover sheet
02-Power Div & Specification
03-Intel socket 478 CPU part 1
04-Intel socket 478 CPU part 2
05-Main Clock Gen & Clock buffer.
06-SIS648FX-1 Host & AGP
07-SIS648FX-2 Memory
08-SIS648FX-3/4 Power & HyperZip
09-SIS963-1 PCI & IDE & HyperZip
10-SIS963-2 MISC.
11-SIS963-3/4 USB & Power
12-AGP slot & Pull-UP/DN resistor
13-DIMM 1 & 2
14-DDR Terminator
15-PCI slot 1 & 2 & 3
15-MINI PCI slot
16-W83697HF I/O & BIOS
17-AC97 Codec
18-Audio connector
19-USB port & BIOS
20-IEEE1394/FW803
21-VIA VT6103(MII PHY)
22-MS5 ACPI Controller-CRB
23-VRM 10
24-ATX & F-Panel & Game port
25-IDE1/2 & PS2
26-Com/Parallel port

MICRO-STAR INT'L CO.,LTD.

Title	Cover Sheet & Block Diagram	
Size: Custom	Document Number: MS-6785	Rev: 101
Date: Thursday, August 28, 2003	Sheet 1 of 28	

Power Delivery Map

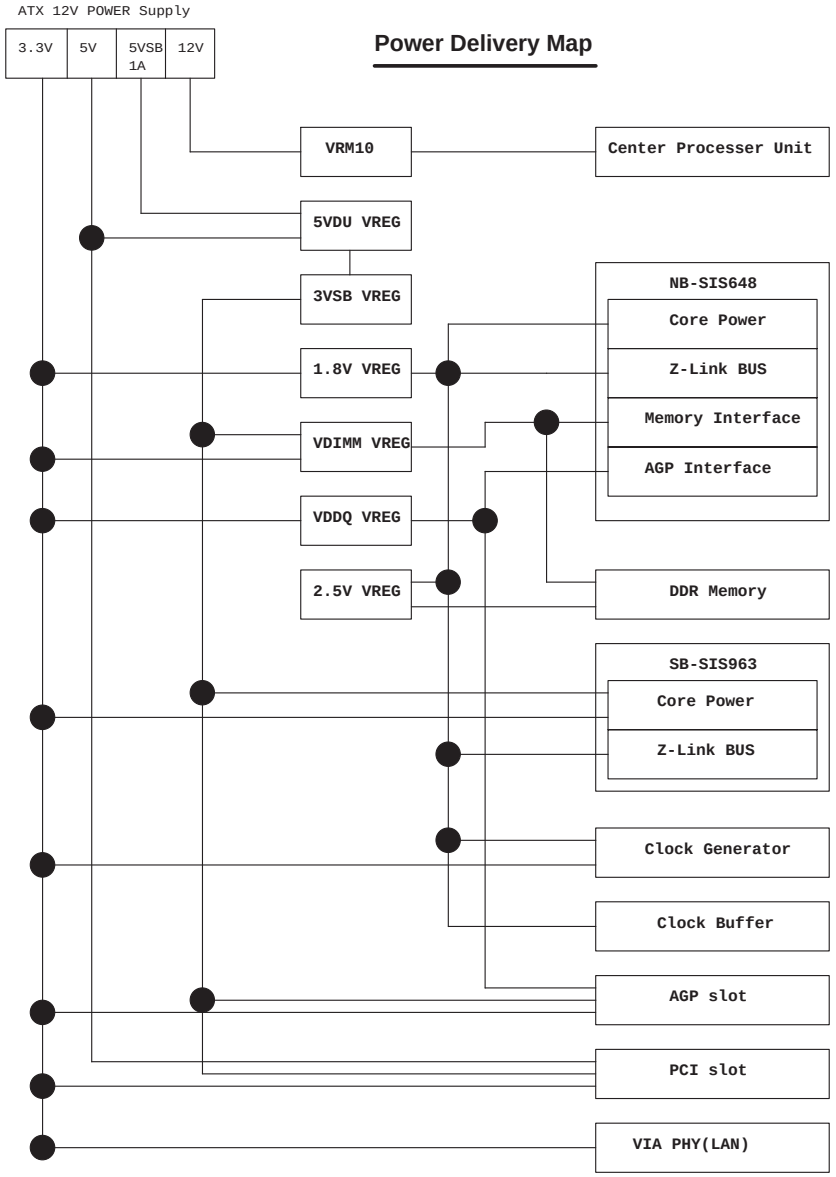

MICRO-STAR INT'L LO.,LTD.		
Title: Power Delivery		
Size: Custom	Document Number: MS-6785	Rev: 101
Date: Thursday, August 28, 2003	Sheet 2 of 28	

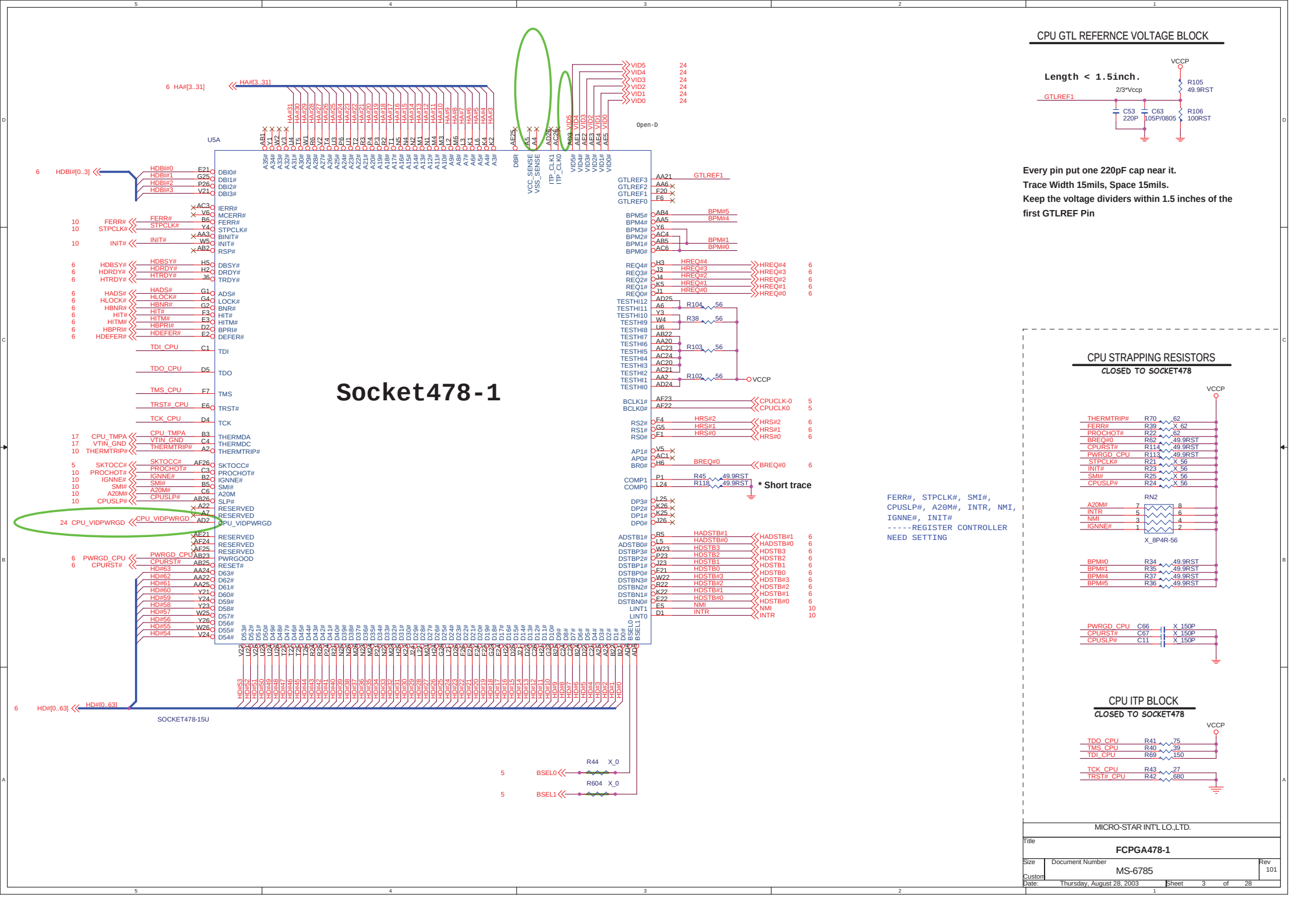
Socket478-1
U5A
SOCKET478-15U
CPU GTL REFERNCE VOLTAGE BLOCK
Length < 1.5inch.
VCCP
2/3*Vccp
GTLREF1
R105 49.9RST
R106 100RST
C53 220P
C63 105P/0805
Every pin put one 220pF cap near it.
Trace Width 15mils, Space 15mils.
Keep the voltage dividers within 1.5 inches of the first GTLREF Pin
CPU STRAPPING RESISTORS
CLOSED TO SOCKET478
THERMTRIP# R70 62
FERR# R39 X_62
PROCHOT# R22 62
BREQ#0 R62 49.9RST
CPURST# R114 49.9RST
PWRGD_CPU R113 49.9RST
STPCLK# R21 X_56
INIT# R23 X_56
SMI# R25 X_56
CPUSLP# R24 X_56
RN2
A20M# 7 8
INTR 5 6
NMI 3 4
IGNNE# 1 2
X_8P4R-56
BPM#0 R34 49.9RST
BPM#1 R35 49.9RST
BPM#4 R37 49.9RST
BPM#5 R36 49.9RST
PWRGD_CPU C66 X_150P
CPURST# C67 X_150P
CPUSLP# C11 X_150P
CPU ITP BLOCK
CLOSED TO SOCKET478
TDO_CPU R41 75
TMS_CPU R40 39
TDI_CPU R69 150
TCK_CPU R43 27
TRST#_CPU R42 680
FERR#, STPCLK#, SMI#, CPUSLP#, A20M#, INTR, NMI, IGNNE#, INIT#
-----REGISTER CONTROLLER NEED SETTING
* Short trace
R44 X_0
R604 X_0
BSEL0
BSEL1
VID5 24
VID4 24
VID3 24
VID2 24
VID1 24
VID0 24
Open-D
HA#[3..31]
HDBI#[0..3]
HD#[0..63]
CPU_VIDPWRGD
VCCP
MICRO-STAR INT'L LO.,LTD.
Title
FCPGA478-1
Size
Document Number
MS-6785
Rev
101
Custom
Date: Thursday, August 28, 2003
Sheet 3 of 28

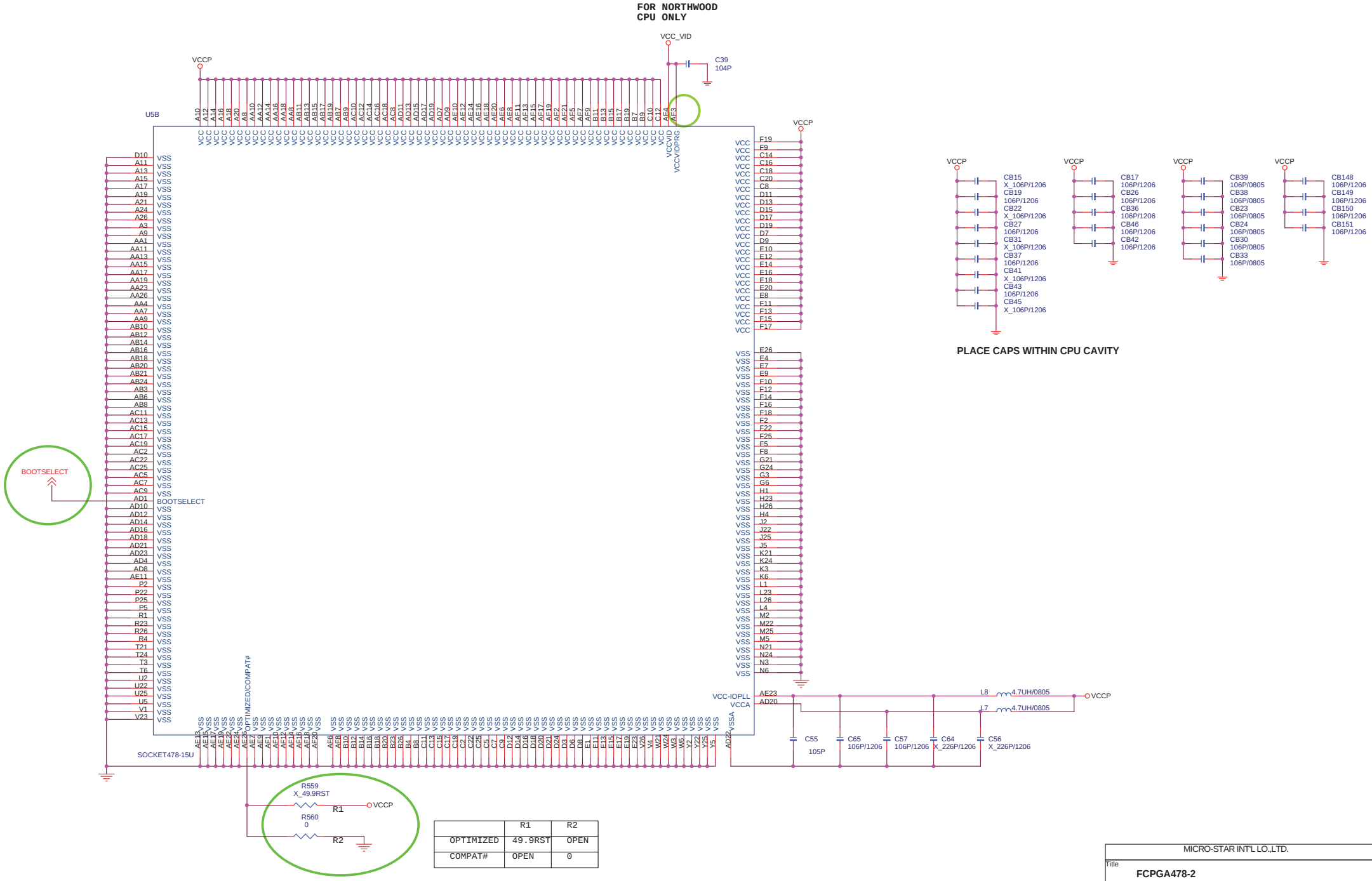

	R1	R2
OPTIMIZED	49.9RST	OPEN
COMPAT#	OPEN	0

MICRO-STAR INT'L LO.,LTD.

Title: FCPGA478-2

Size: Custom | Document Number: MS-6785 | Rev: 101

Date: Thursday, August 28, 2003 | Sheet 4 of 28

Main Clock Generator

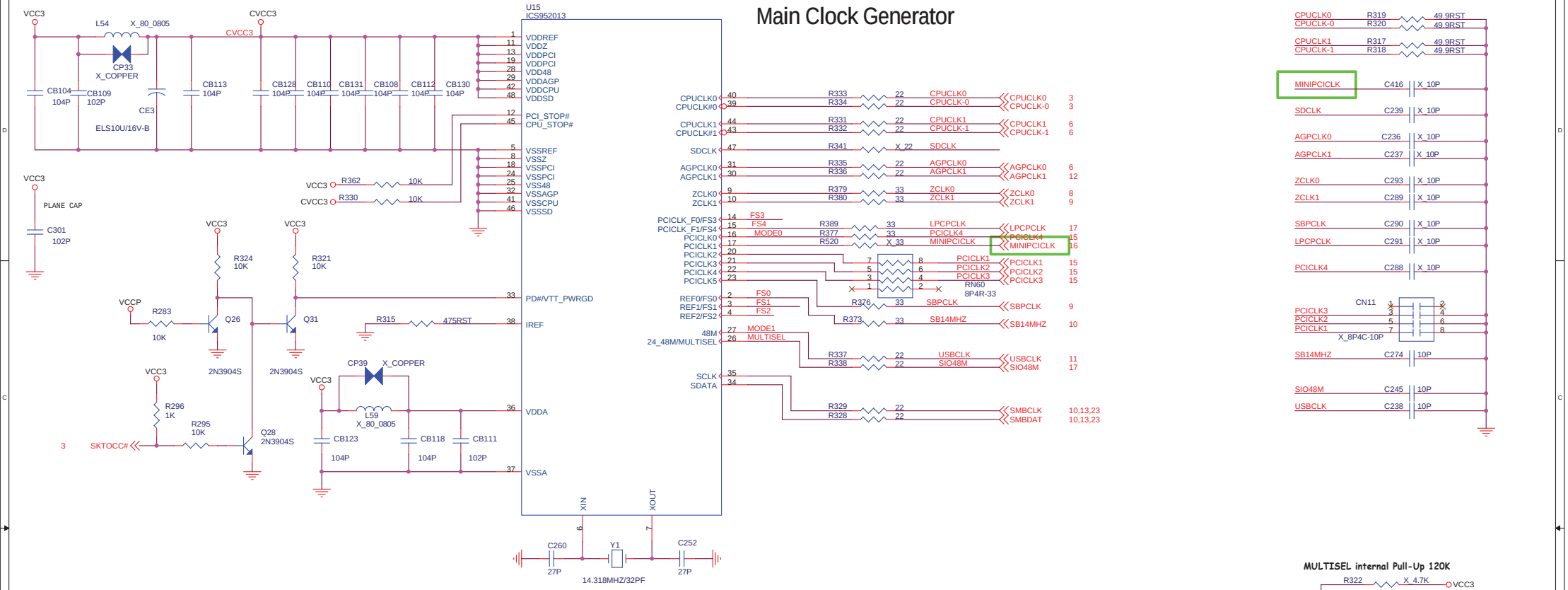

Clock Buffer (DDR)

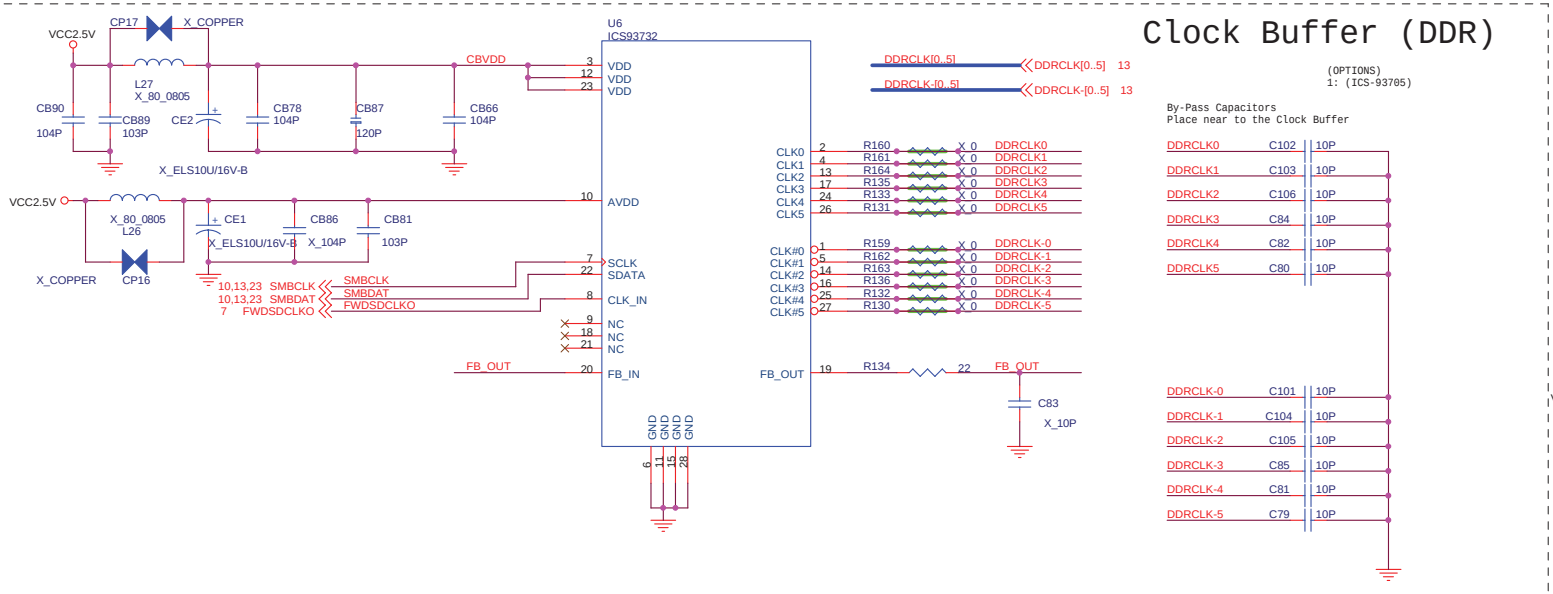

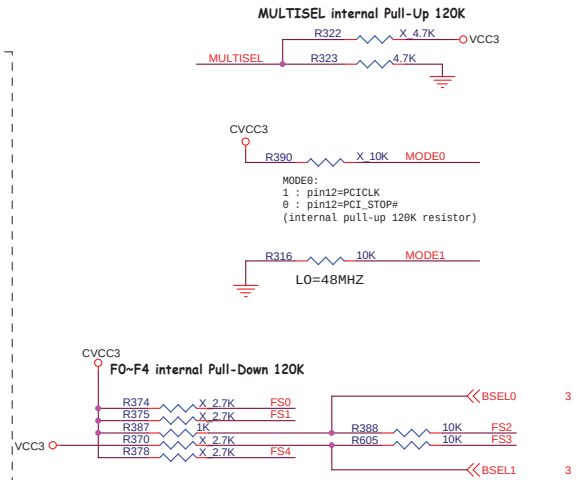

FS4	FS3	FS2	FS1	FS0	CPU	SDRAM	ZCLK	AGP	PCI
0	0	0	0	0	100	100	80	66	33
0	0	1	0	0	133	100	80	66	33
	1	1			200				

MICRO-STAR INT'L LO.,LTD.

Title: Main Clock Gen.

Size: Custom | Document Number: MS-6785 | Rev: 101

Date: Thursday, August 28, 2003 | Sheet 5 of 28

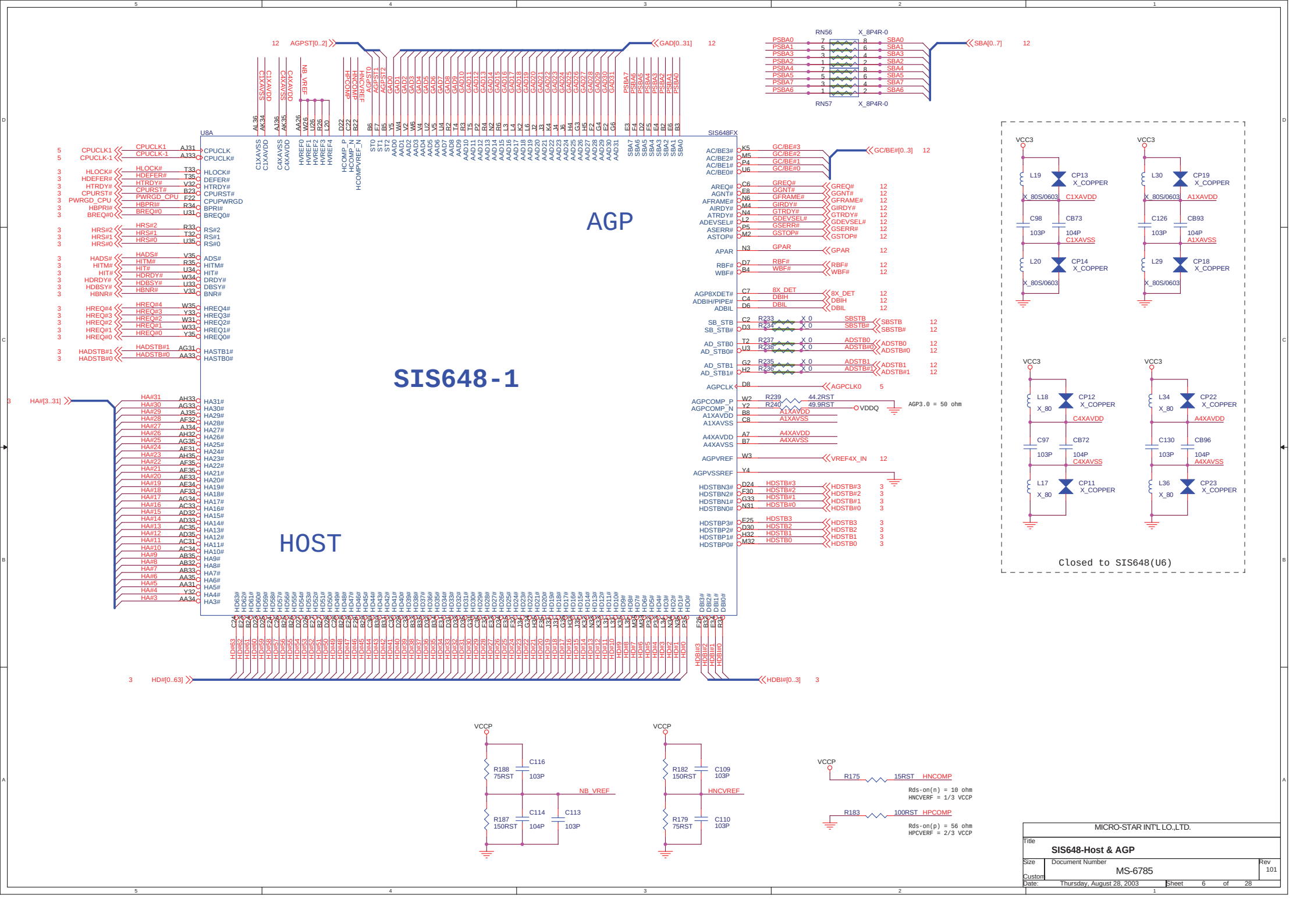
SIS648-1
HOST
AGP
U8A
SIS648FX
AGPST[0..2]
GAD[0..31]
SBA[0..7]
RN56
RN57
X_8P4R-0
GC/BE#[0..3]
HA#[3..31]
HD#[0..63]
HDBI#[0..3]
VDDQ
AGP3.0 = 50 ohm
VCC3
L19
CP13
X_COPPER
X_80S/0603
C1XAVDD
C98
CB73
103P
104P
C1XAVSS
L20
CP14
L30
CP19
A1XAVDD
C126
CB93
A1XAVSS
L29
CP18
L18
CP12
X_80
C4XAVDD
C97
CB72
C4XAVSS
L17
CP11
L34
CP22
A4XAVDD
C130
CB96
A4XAVSS
L36
CP23
Closed to SIS648(U6)
VCCP
R188
75RST
C116
NB_VREF
R187
150RST
C114
C113
R182
150RST
C109
HNCVREF
R179
75RST
C110
R175
15RST
HNCOMP
Rds-on(n) = 10 ohm
HNCVERF = 1/3 VCCP
R183
100RST
HPCOMP
Rds-on(p) = 56 ohm
HPCVERF = 2/3 VCCP
MICRO-STAR INT'L LO.,LTD.
Title
SIS648-Host & AGP
Size
Document Number
MS-6785
Rev
101
Custom
Date: Thursday, August 28, 2003
Sheet 6 of 28

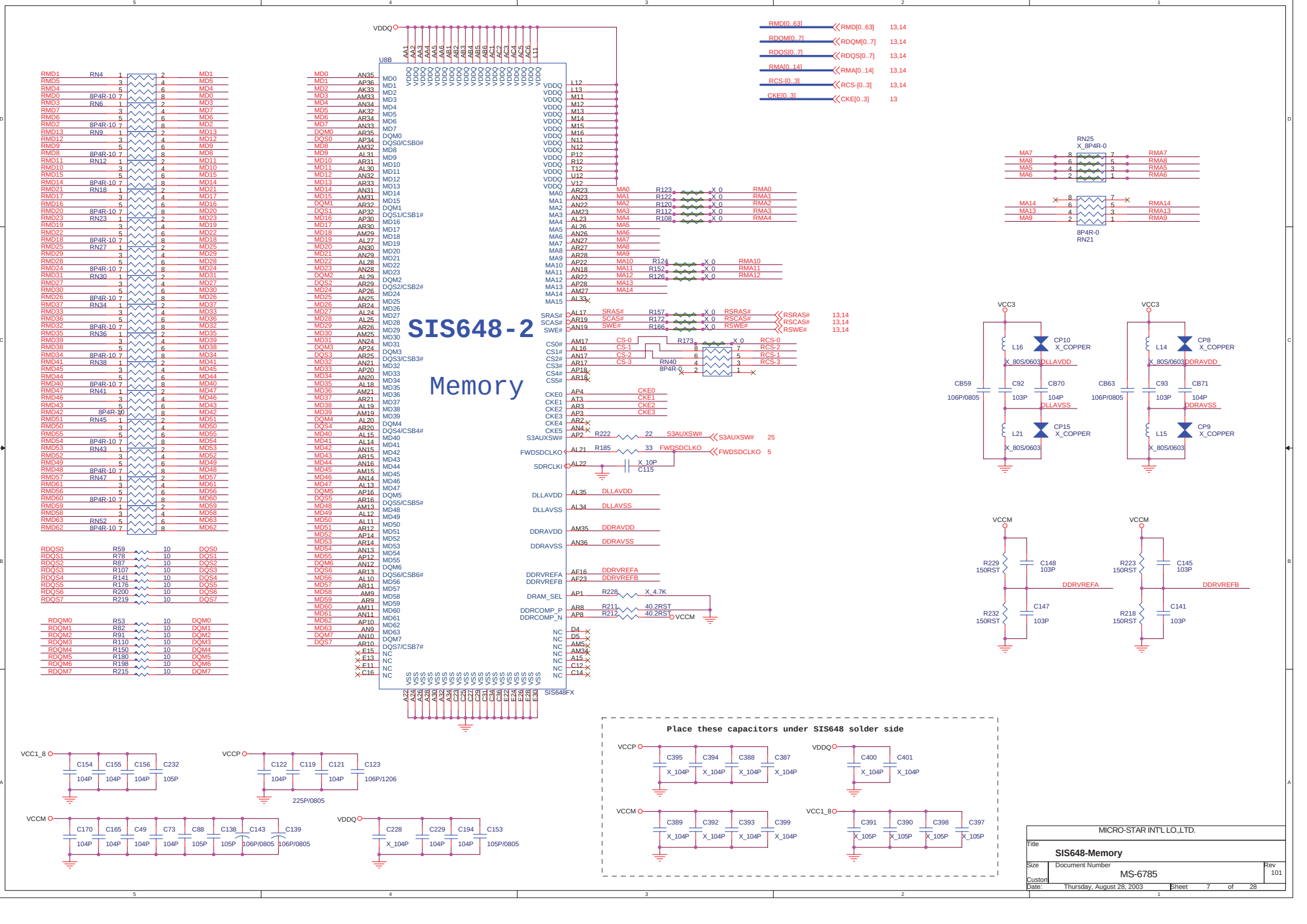

MICRO-STAR INT'L LO.,LTD.	
Title	SIS648-Memory
Size / Document Number	MS-6785
Rev	101
Date:	Thursday, August 28, 2003
Sheet	7 of 28

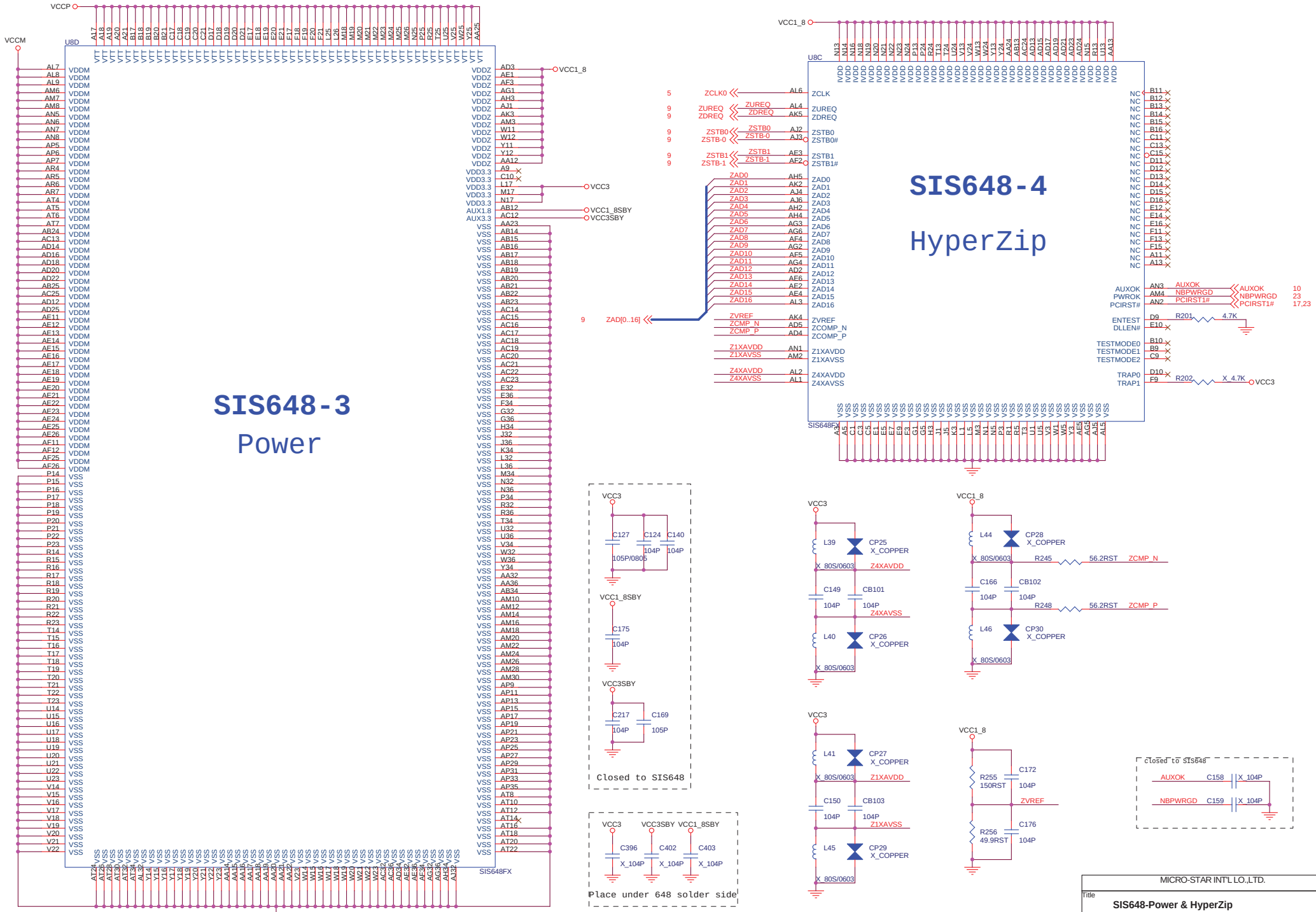
SIS648-3
Power
SIS648-4
HyperZip
U8D
U8C
SIS648FX
VCCP
VCCM
VCC1_8
VCC3
VCC1_8SBY
VCC3SBY
ZCLK0
ZUREQ
ZDREQ
ZSTB0
ZSTB-0
ZSTB1
ZSTB-1
ZAD[0..16]
AUXOK
NBPWRGD
PCIRST1#
ENTEST
DLLEN#
TESTMODE0
TESTMODE1
TESTMODE2
TRAP0
TRAP1
R201
4.7K
R202
X_4.7K
Closed to SIS648
Place under 648 solder side
closed to SIS648
MICRO-STAR INT'L LO.,LTD.
Title
SIS648-Power & HyperZip
Size
Document Number
MS-6785
Rev
101
Custom
Date:
Thursday, August 28, 2003
Sheet
8
of
28

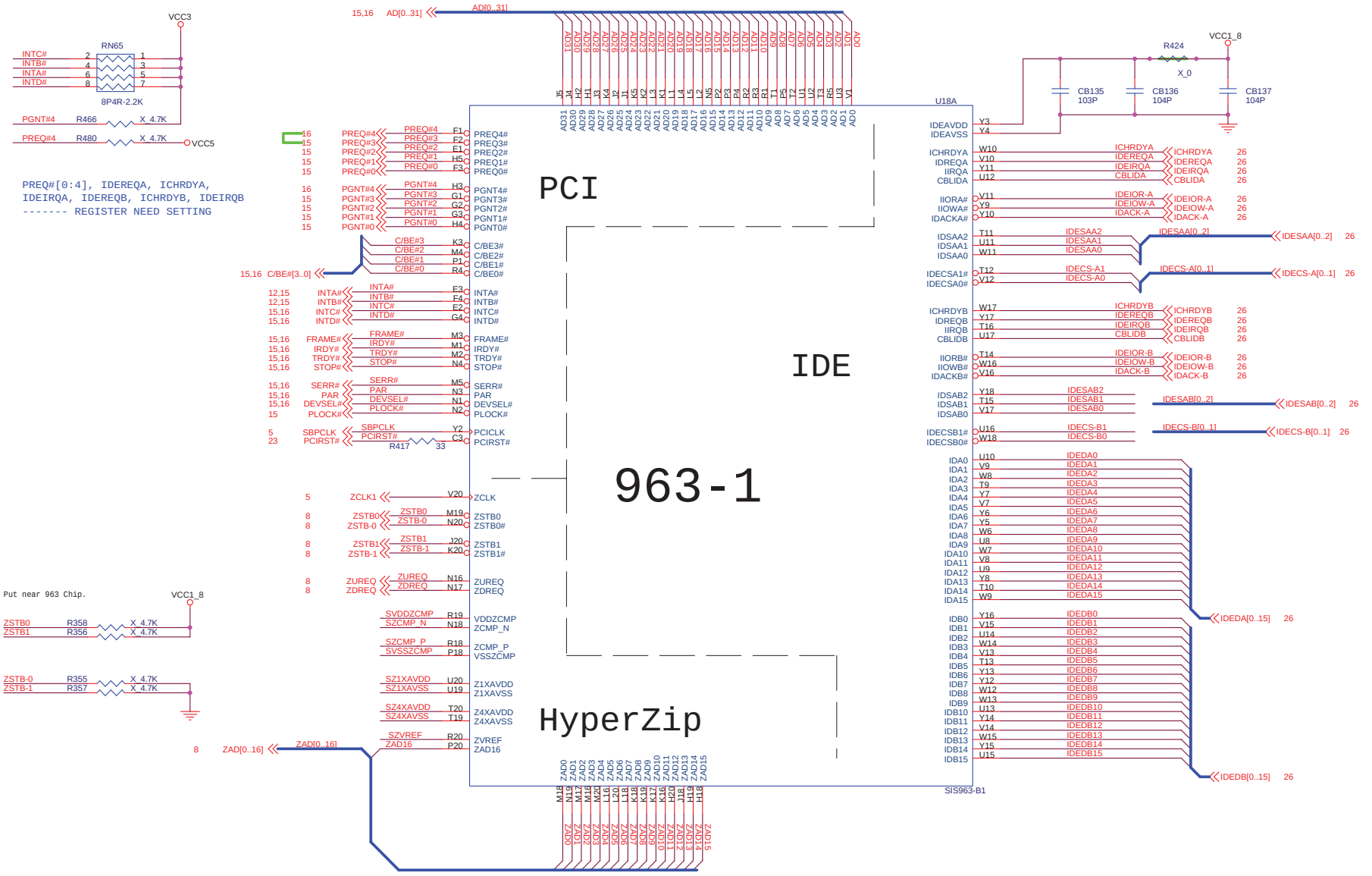

MICRO-STAR INT'L LO.,LTD.

Title: **SIS963-1 PCI & IDE & HyperZip**

Size: Custom | Document Number: MS-6785 | Rev: 101

Date: Thursday, August 28, 2003 | Sheet 9 of 28

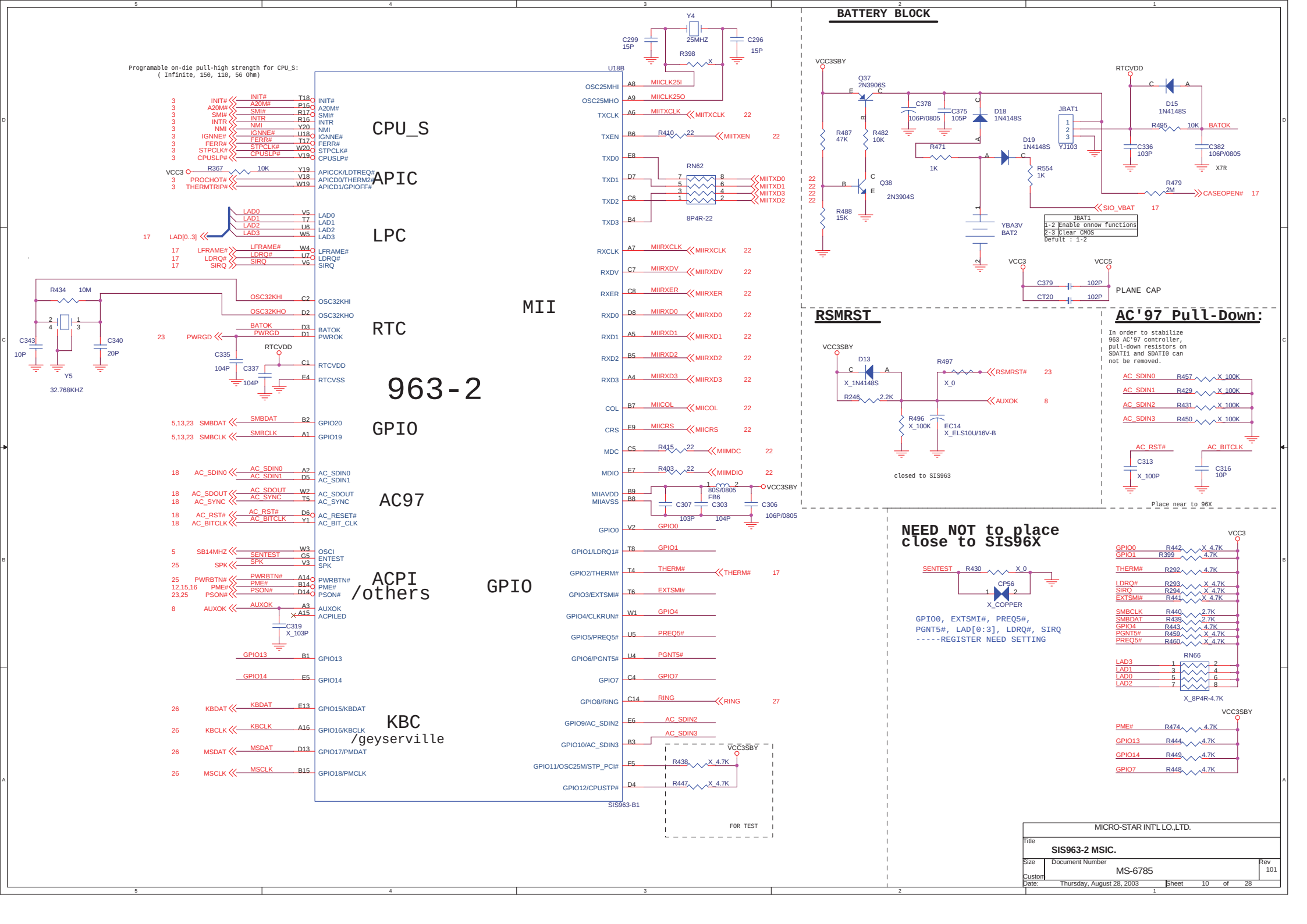
BATTERY BLOCK
Programable on-die pull-high strength for CPU_S:
(Infinite, 150, 110, 56 Ohm)
CPU_S
APIC
LPC
RTC
963-2
GPIO
AC97
ACPI
/others
KBC
/geyserville
MII
GPIO
U18B
SIS963-B1
Y4
25MHZ
C299
15P
C296
15P
R398
X
RN62
8P4R-22
Y5
32.768KHZ
R434
10M
C343
10P
C340
20P
C335
104P
C337
104P
RTCVDD
VCC3SBY
VCC3
VCC5
R367
10K
C307
103P
C303
104P
C306
106P/0805
80S/0805
FB6
FOR TEST
R438
X_4.7K
R447
X_4.7K
BATTERY BLOCK
Q37
2N3906S
Q38
2N3904S
R487
47K
R482
10K
R488
15K
C378
106P/0805
C375
105P
D18
1N4148S
D19
1N4148S
R471
1K
R554
1K
YBA3V
BAT2
JBAT1
YJ103
D15
1N4148S
R495
10K
BATOK
C336
103P
C382
106P/0805
X7R
R479
2M
CASEOPEN#
SIO_VBAT
JBAT1
1-2 Enable onnow functions
2-3 Clear CMOS
Defult : 1-2
C379
102P
CT20
102P
PLANE CAP
RSMRST
D13
X_1N4148S
R246
2.2K
R497
X_0
RSMRST#
AUXOK
R496
X_100K
EC14
X_ELS10U/16V-B
closed to SIS963
AC'97 Pull-Down:
In order to stabilize
963 AC'97 controller,
pull-down resistors on
SDATI1 and SDATI0 can
not be removed.
AC_SDIN0 R457 X_100K
AC_SDIN1 R429 X_100K
AC_SDIN2 R431 X_100K
AC_SDIN3 R450 X_100K
AC_RST#
AC_BITCLK
C313
X_100P
C316
10P
Place near to 96X
NEED NOT to place
close to SIS96X
SENTEST
R430
X_0
CP56
X_COPPER
GPIO0, EXTSMI#, PREQ5#,
PGNT5#, LAD[0:3], LDRQ#, SIRQ
-----REGISTER NEED SETTING
GPIO0 R442 X_4.7K
GPIO1 R399 4.7K
THERM# R292 4.7K
LDRQ# R293 X_4.7K
SIRQ R294 X_4.7K
EXTSMI# R441 X_4.7K
SMBCLK R440 2.7K
SMBDAT R439 2.7K
GPIO4 R443 4.7K
PGNT5# R459 X_4.7K
PREQ5# R460 X_4.7K
RN66
LAD3
LAD1
LAD0
LAD2
X_8P4R-4.7K
PME# R474 4.7K
GPIO13 R444 4.7K
GPIO14 R449 4.7K
GPIO7 R448 4.7K
MICRO-STAR INT'L LO.,LTD.
Title
SIS963-2 MSIC.
Size
Document Number
MS-6785
Rev
101
Custom
Date: Thursday, August 28, 2003
Sheet 10 of 28

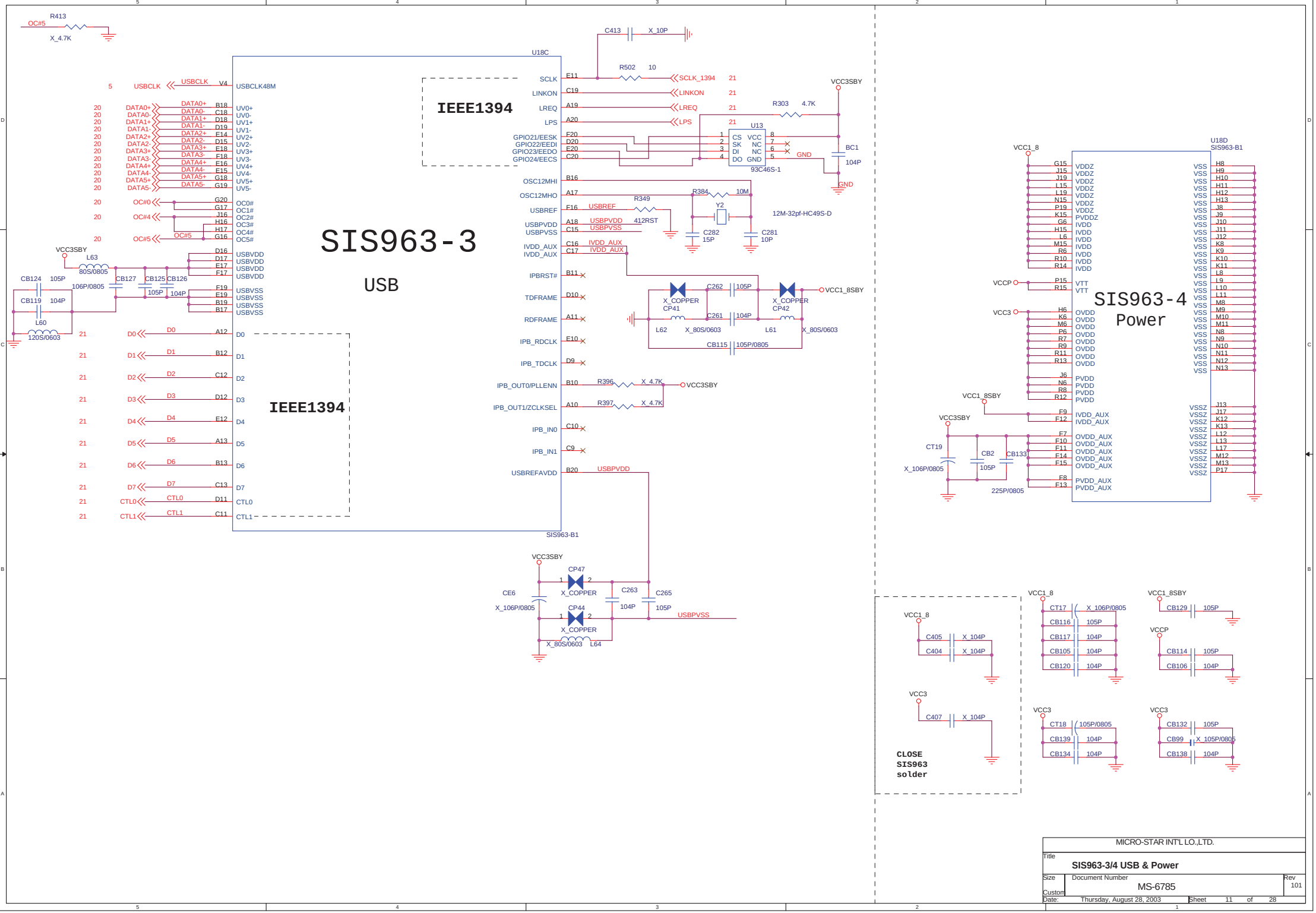

MICRO-STAR INT'L CO.,LTD.

Title: SIS963-3/4 USB & Power

Size: Custom | Document Number: MS-6785 | Rev: 101

Date: Thursday, August 28, 2003 | Sheet 11 of 28

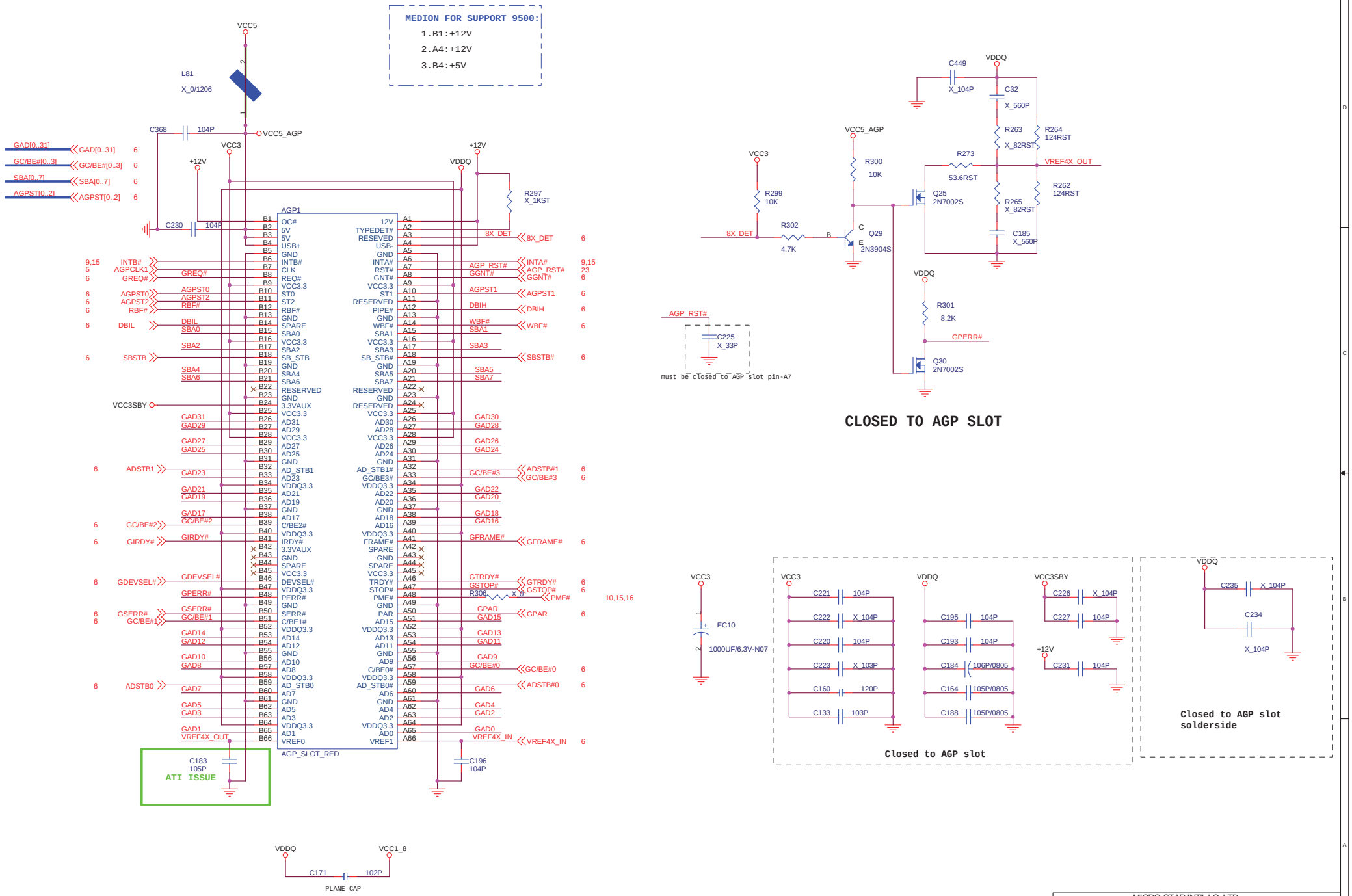

MICRO-STAR INT'L LO.,LTD.	
Title	AGP Slot & Pull up/dn resistor
Size: Custom	Document Number: MS-6785
Rev	101
Date: Thursday, August 28, 2003	Sheet 12 of 28

DDR DIMM1 & DIMM2

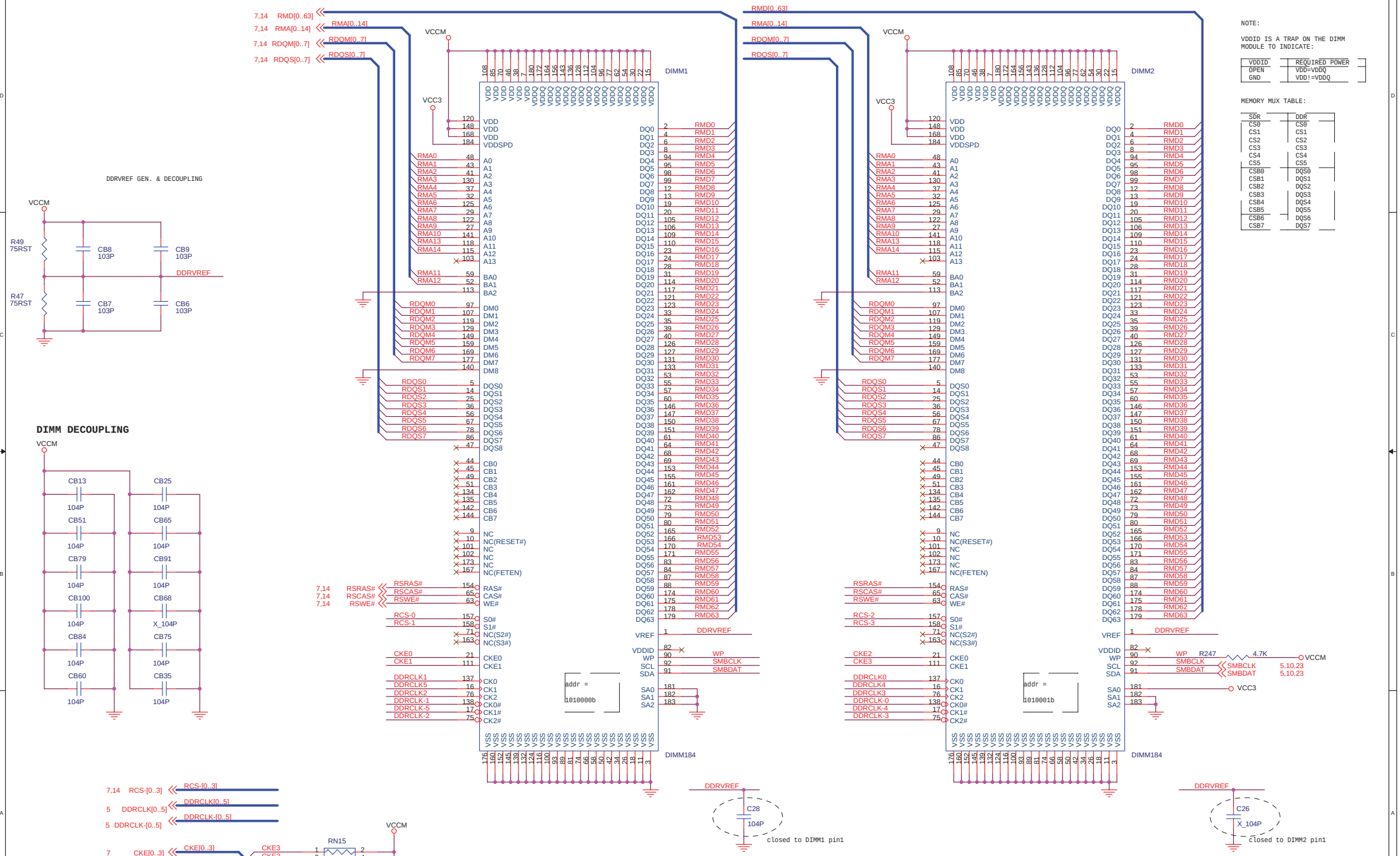

MICRO-STAR INT'L LO.,LTD.

Title: **DDR DIMM1 & 2**

Size: Custom | Document Number: MS-6785 | Rev: 101

Date: Thursday, August 28, 2003 | Sheet 13 of 28

DDR TERMINATOR

SSTL-2 Termination Resistors

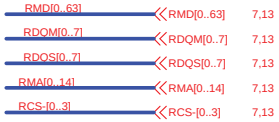

	SDR	Rs	DDR	Rs	Rtt
MD/DQM(/DQS)	LV-CMOS	0/10/-	SSTL-2	10	33
MA/Control	LV-CMOS	10	SSTL-2	0	33
CS	LV-CMOS	0	SSTL-2	0	47
CKE	VD 3.3V		VD 2.5V		

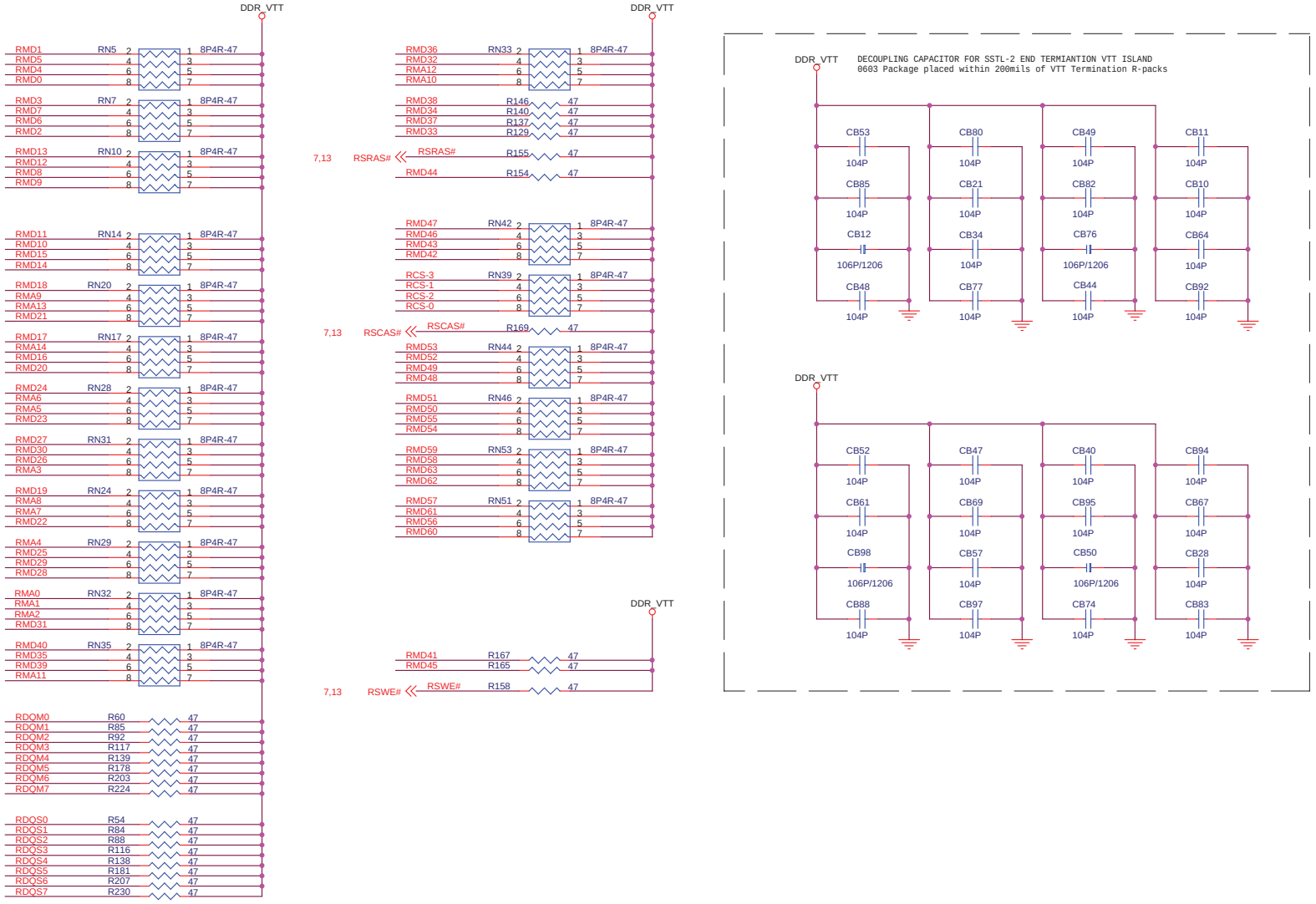

MICRO-STAR INT'L LO.,LTD.			
Title: DDR Terminator			
Size: Custom	Document Number: MS-6785		Rev: 101
Date: Thursday, August 28, 2003	Sheet 14 of 28		

PCI SLOT 1,2,3(PCI VER:2.2 COMPLY)

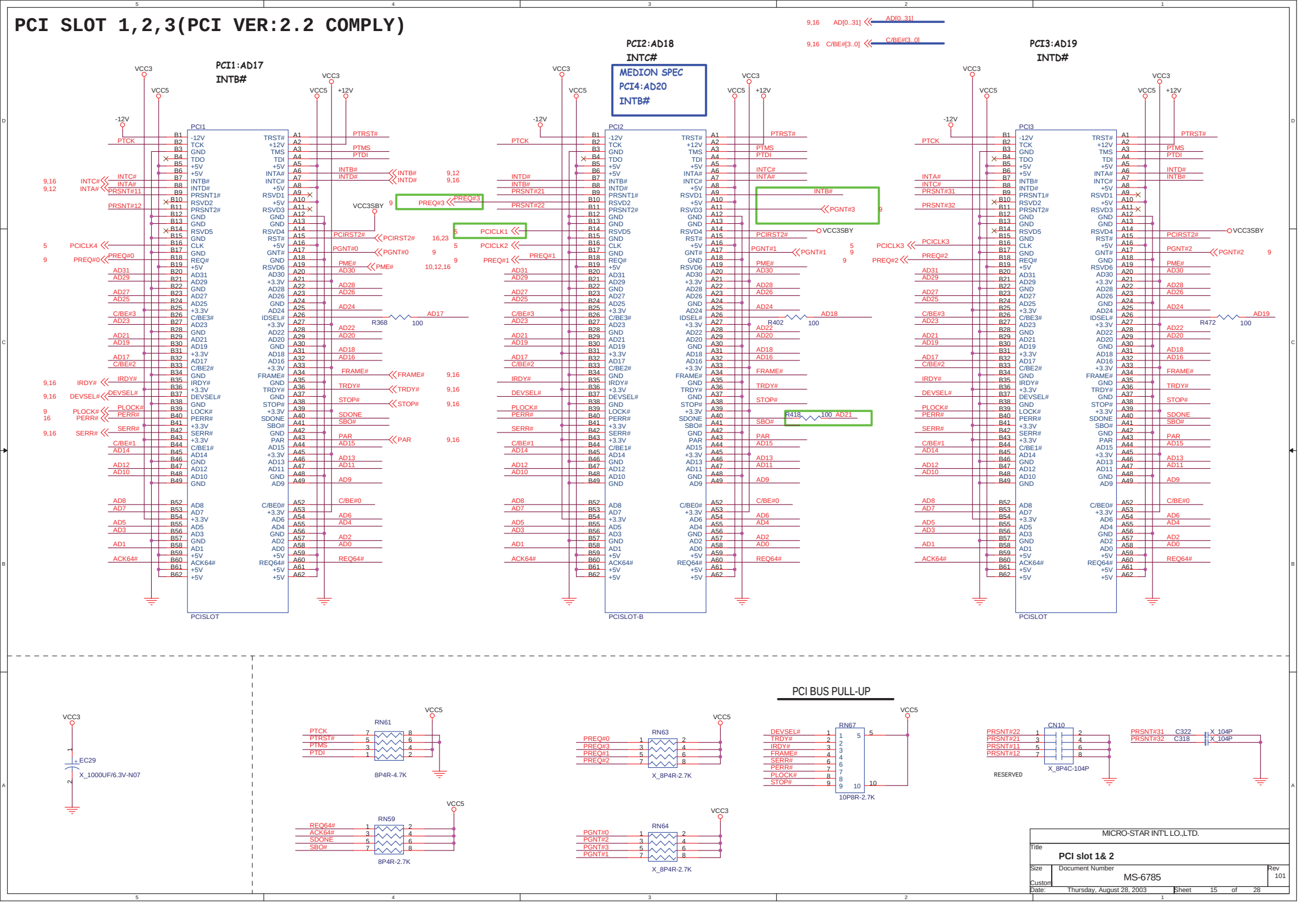

Mini PCI

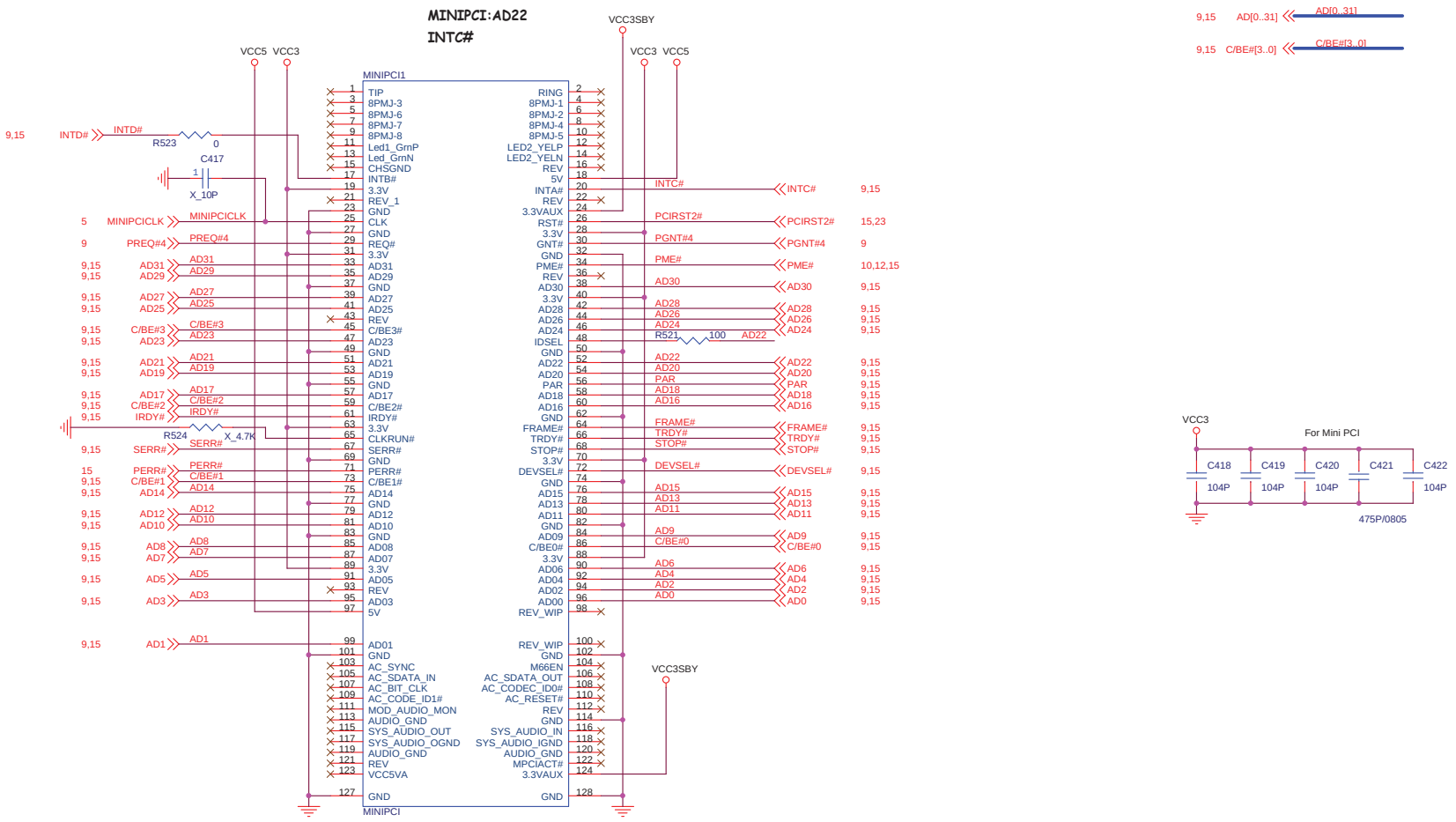

MICRO-STAR INT'L LO.,LTD.	
Title	Mini PCI
Size: Custom	Document Number: MS-6785
Rev	101
Date: Thursday, August 28, 2003	Sheet 16 of 28

SUPER I/O

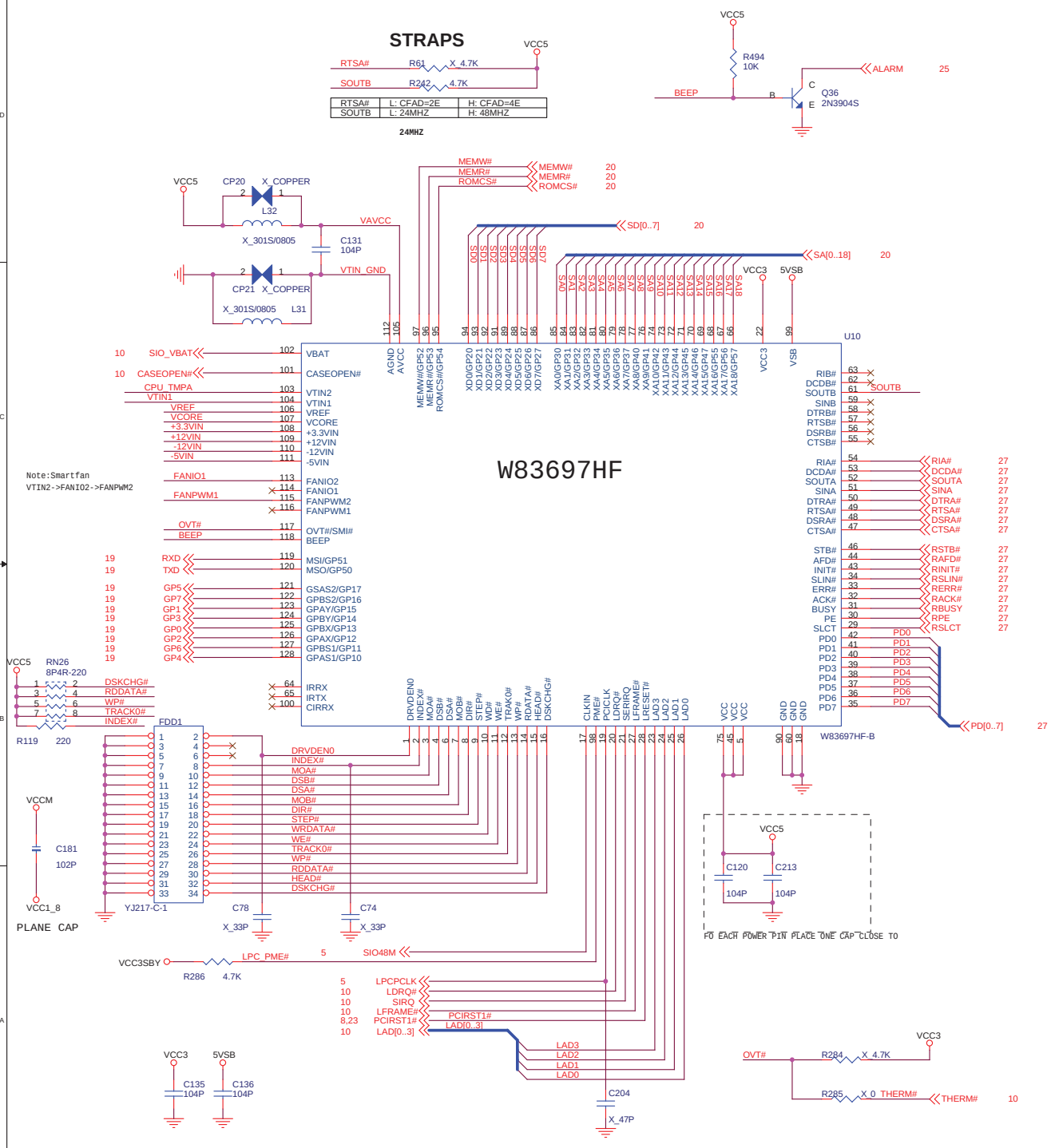

Hardware Monitor

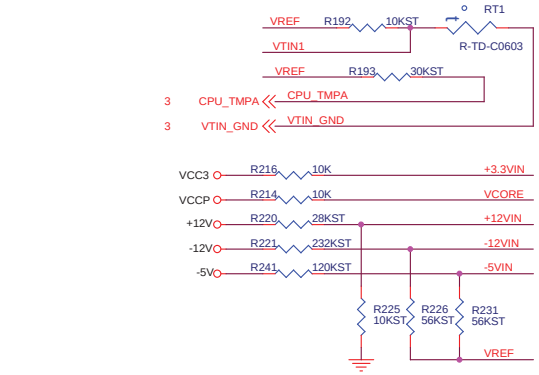

CPU FAN

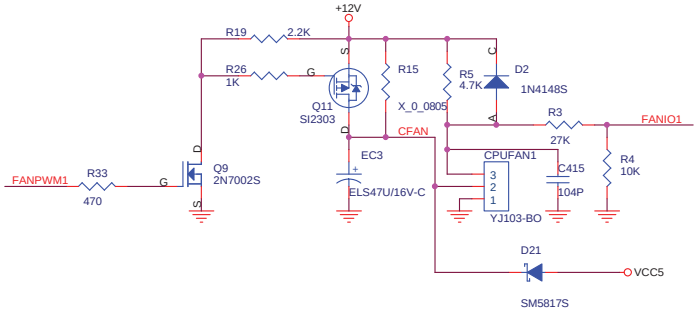

MICRO-STAR INT'L LO.,LTD.	
Title	W83697HF I/O & HWMONITOR
Size / Custom	Document Number MS-6785
Rev	101
Date:	Thursday, August 28, 2003
Sheet	17 of 28

CMEDIA 9739A AC'97 CODEC

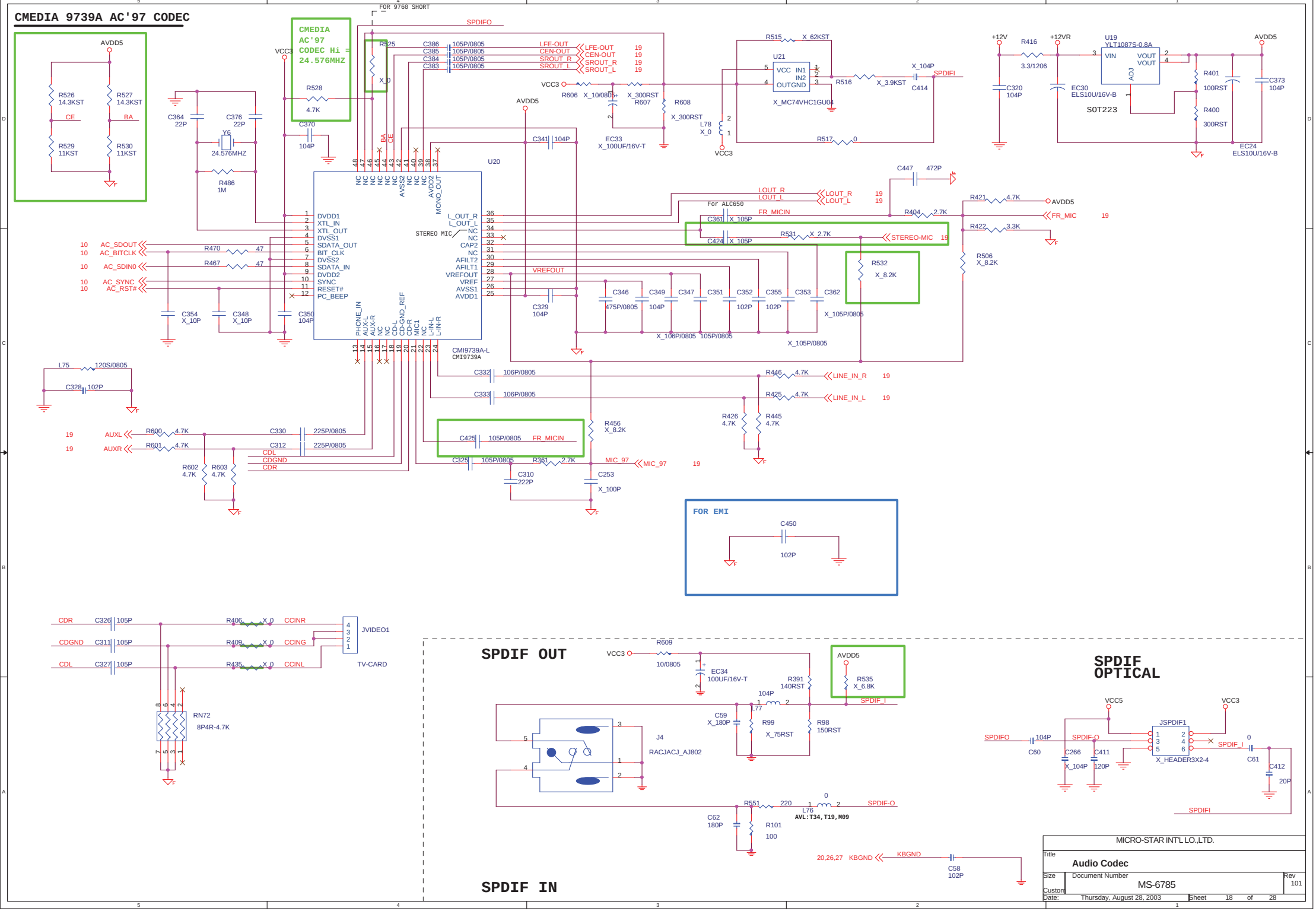

SPEAKER OUT CIRCUIT

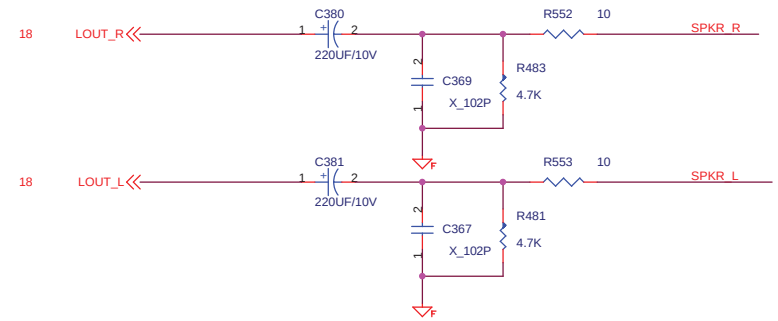

Audio Connector

N54-13F0011-K06
CN-IOC-JACKx3+PHONE-D13

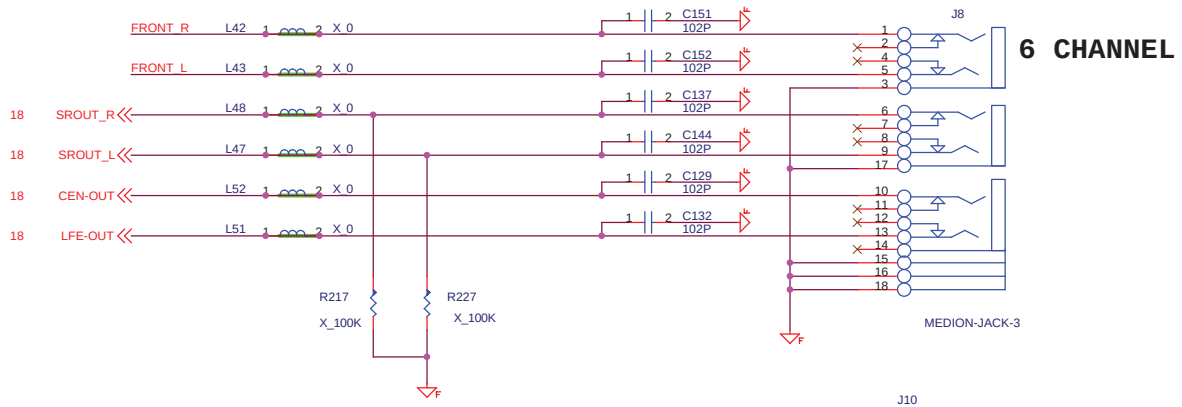

6 CHANNEL

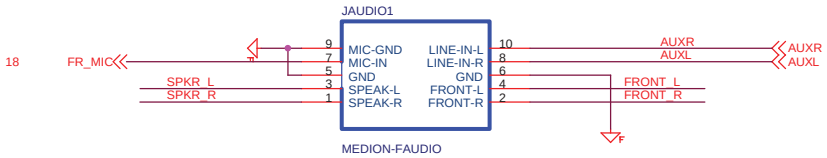

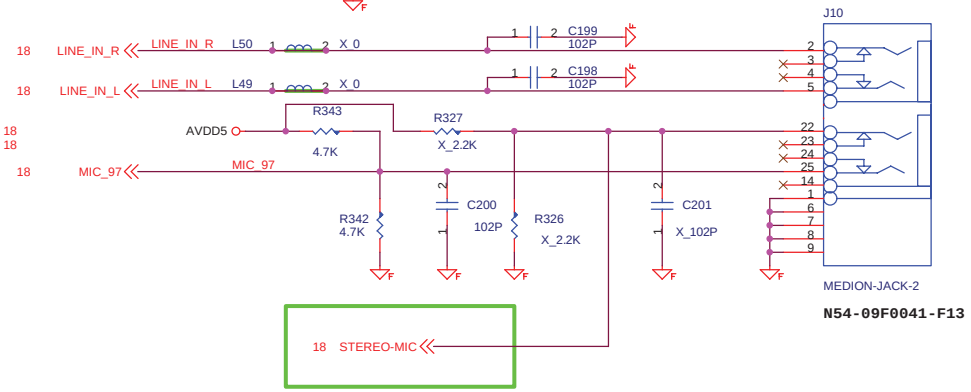

N54-09F0041-F13

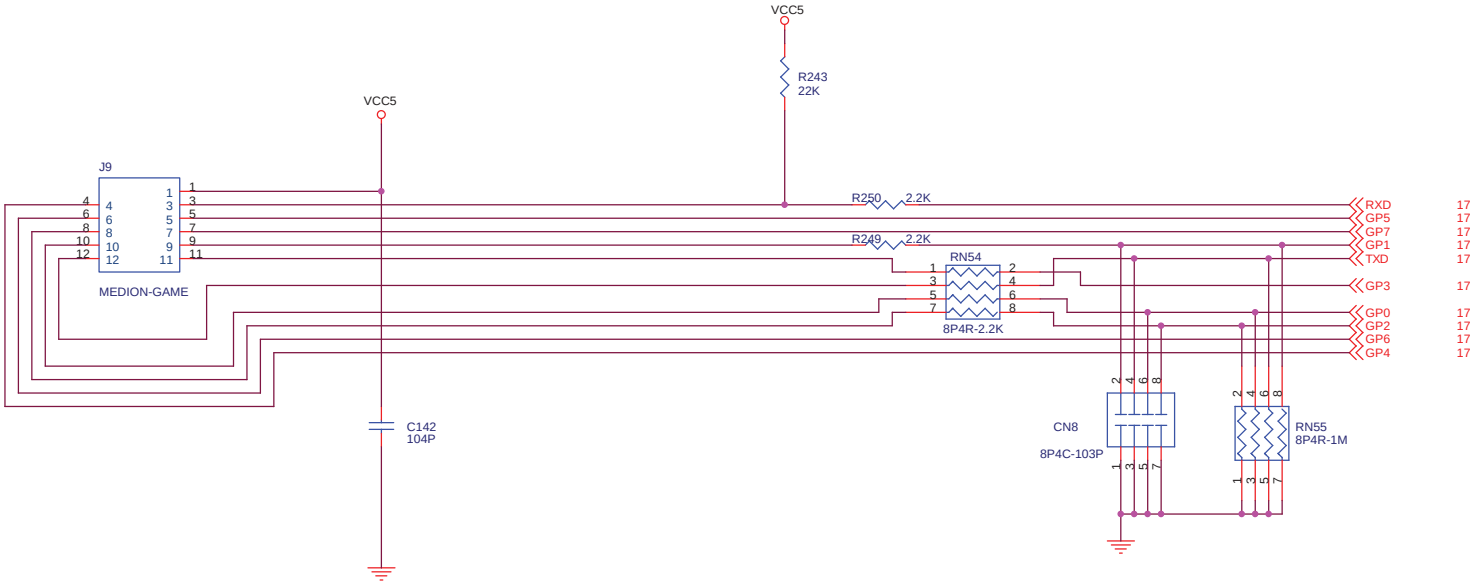

MICRO-STAR INT'L CO.,LTD.		
Title	AUDIO AMPLIFIER	
Size	Document Number MS-6785	Rev 101
Date: Thursday, August 28, 2003	Sheet 19 of 28	

USB PORT

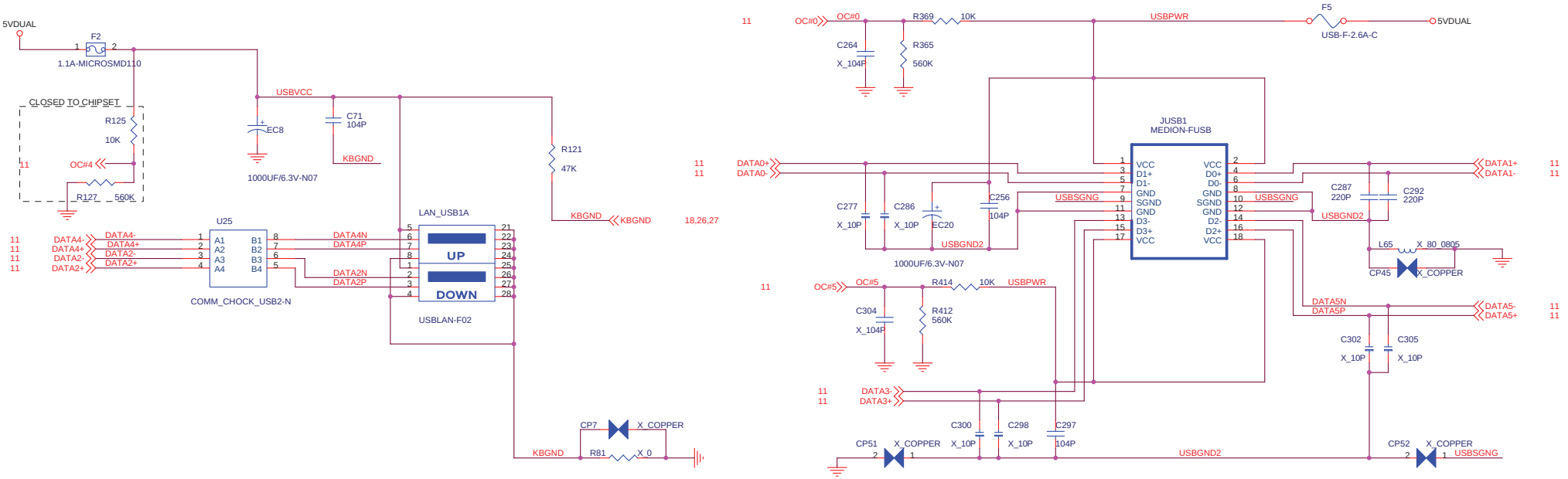

Flash Rom

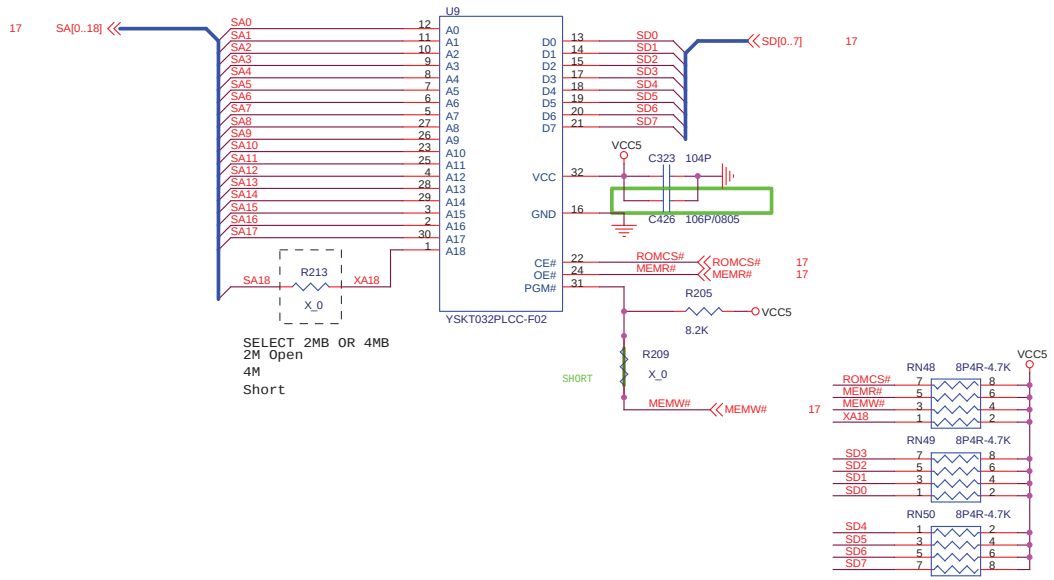

PCB OTHER COMPONENT

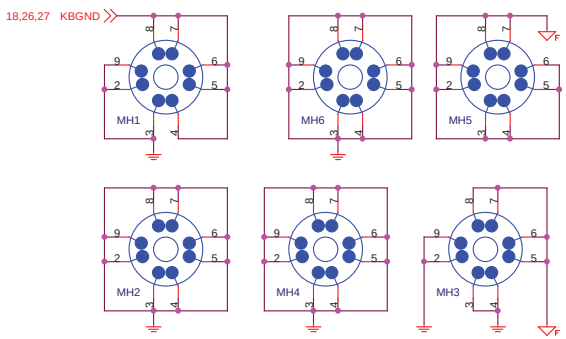

FOR TEST

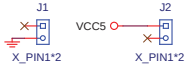

CPU AGP

FIDUCIALS

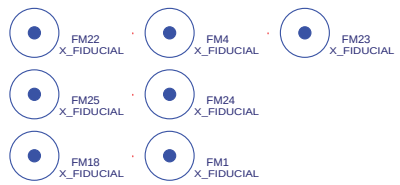

CHIP FIDUCIALS

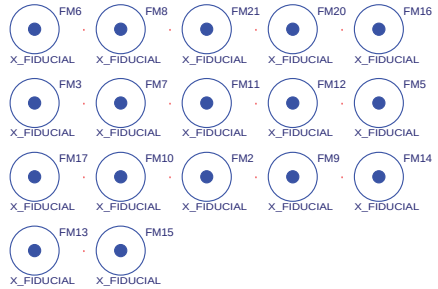

MICRO-STAR INT'L CO.,LTD.		
Title: USB port & MS1		
Size: Custom	Document Number: MS-6785	Rev: 101
Date: Thursday, August 28, 2003	Sheet 20 of 28	

IEEE1394 PHY

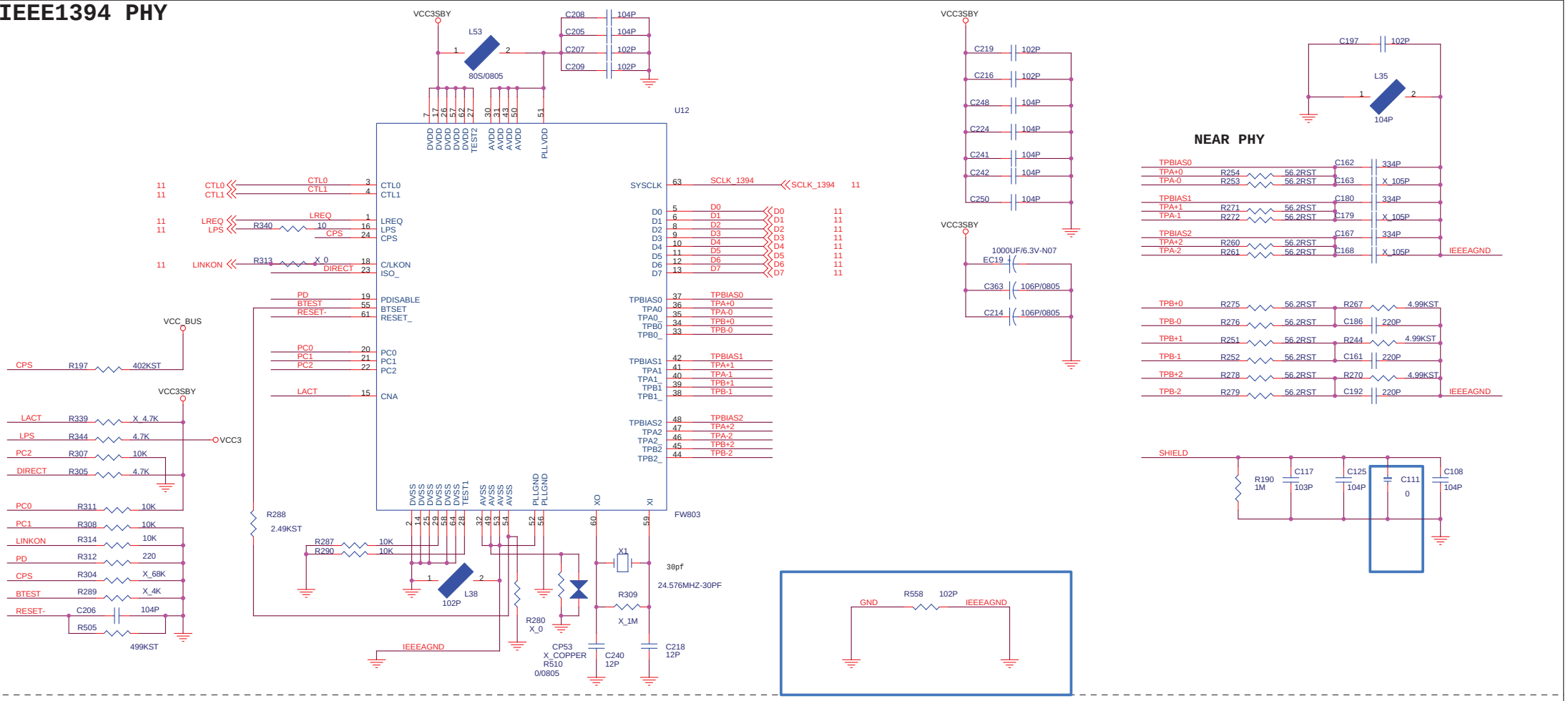

CONNECTOR(6PIN+4PIN+FRONT HEADER)

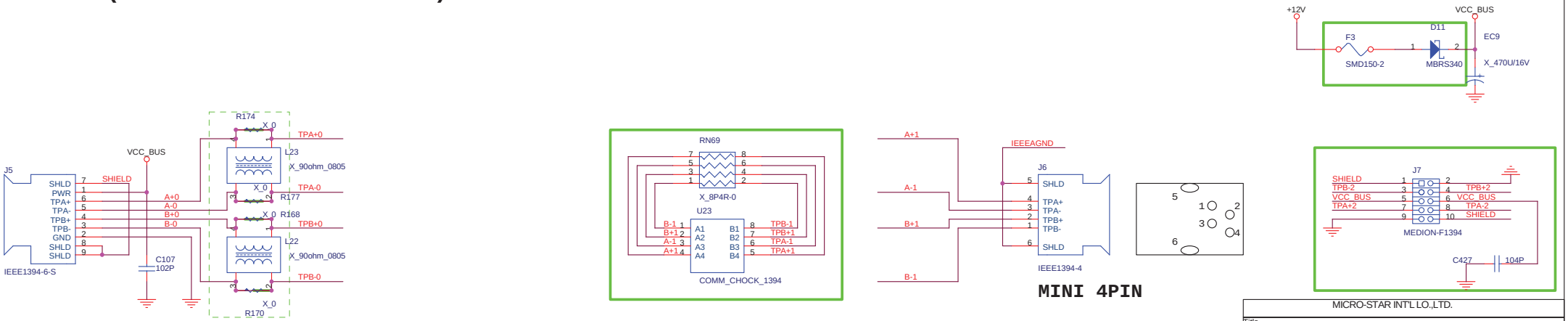

MICRO-STAR INT'L LO.,LTD.	
Title	IEEE1394 PHY/RTL8801
Size / Document Number	MS-6785
Rev	101
Custom	
Date: Thursday, August 28, 2003	Sheet 21 of 28

Fast Ethernet 1-Port PHY

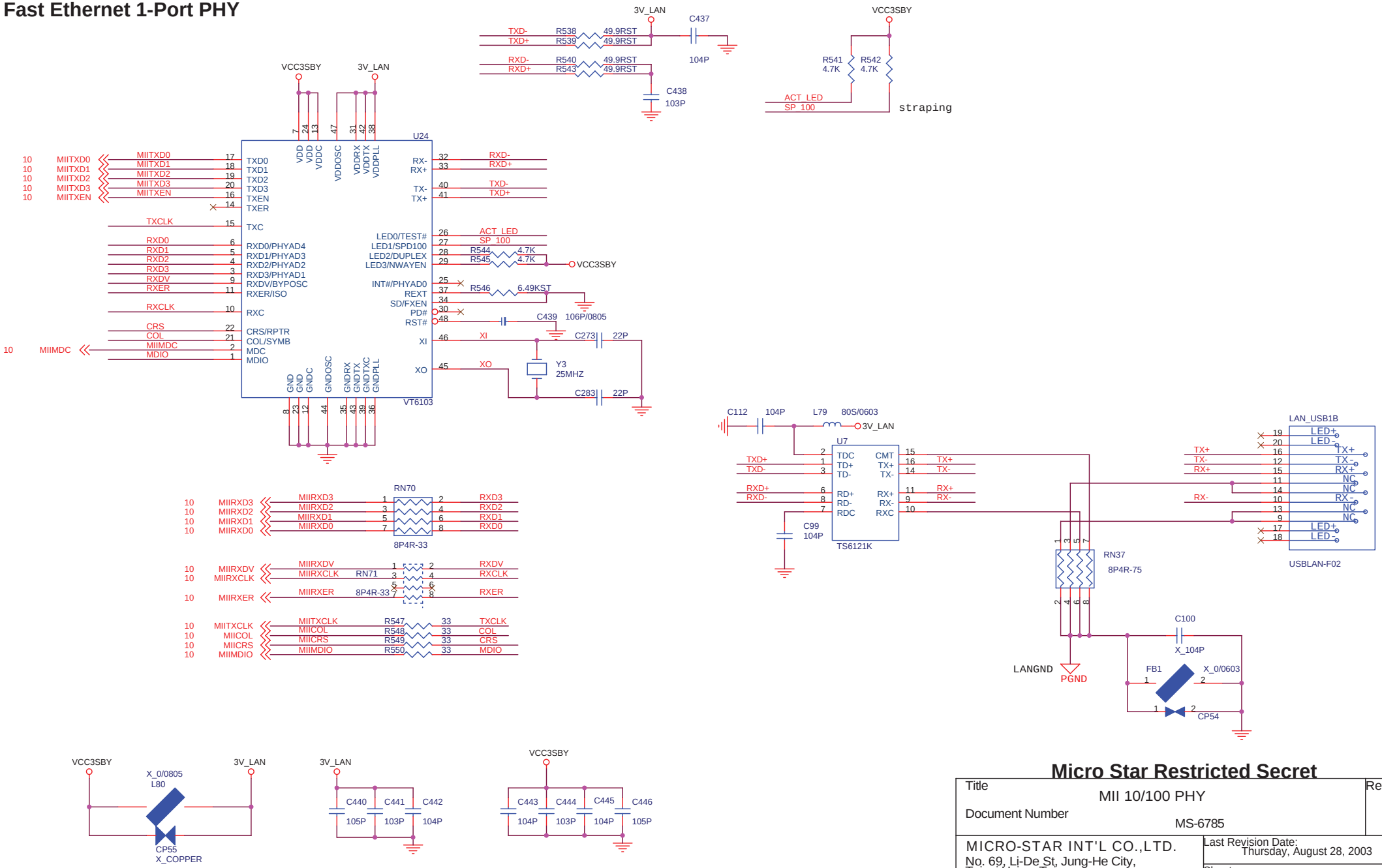

Micro Star Restricted Secret

Title	MII 10/100 PHY	Rev 101
Document Number	MS-6785	
MICRO-STAR INT'L CO.,LTD. No. 69, Li-De St, Jung-He City, Taipei Hsien, Taiwan http://www.msi.com.tw	Last Revision Date: Thursday, August 28, 2003	
	Sheet 22 of 28	

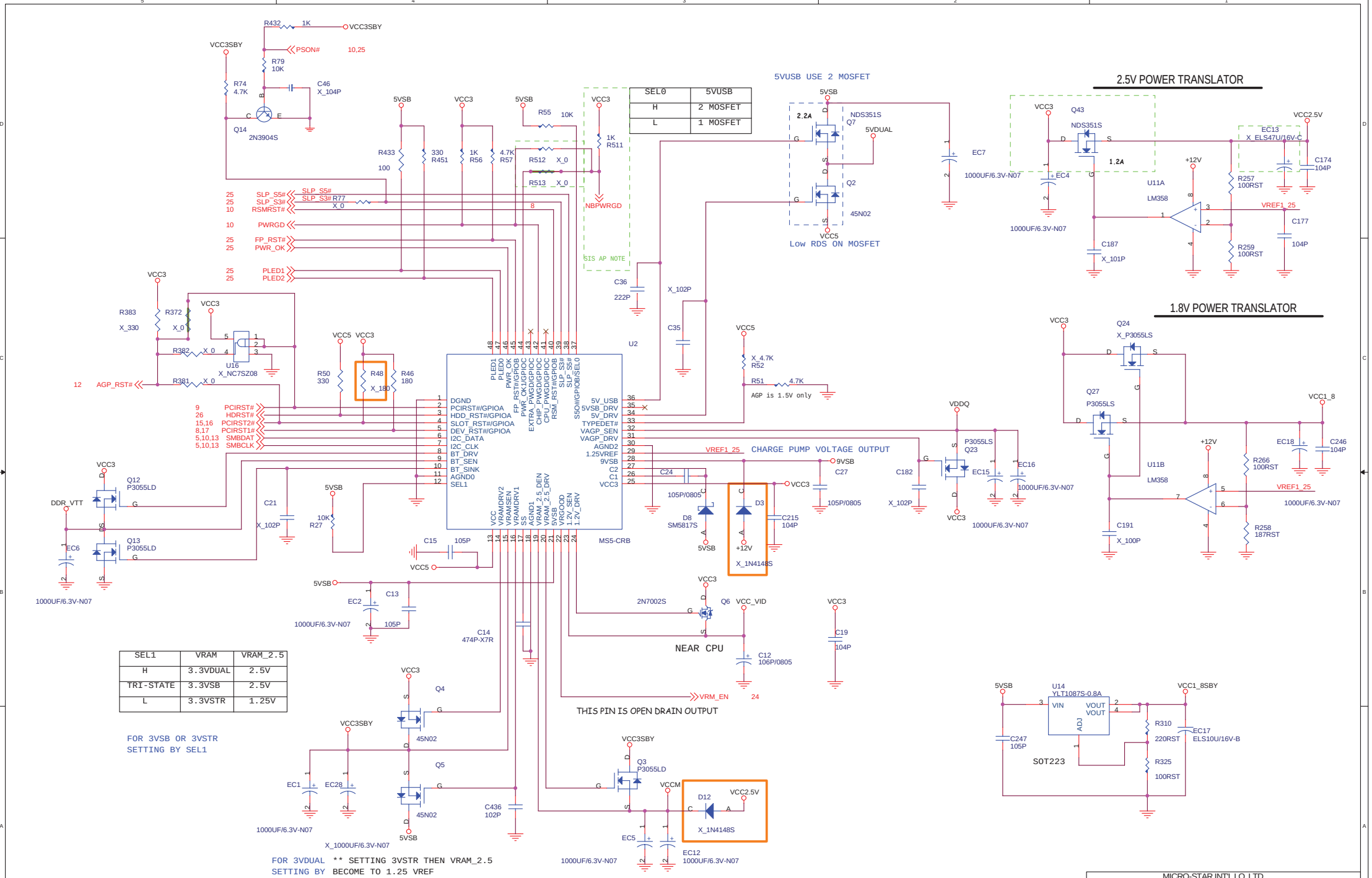

SEL0	5VUSB
H	2 MOSFET
L	1 MOSFET

SEL1	VRAM	VRAM_2.5
H	3.3VDUAL	2.5V
TRI-STATE	3.3VSB	2.5V
L	3.3VSTR	1.25V

MICRO-STAR INT'L LO.,LTD.

Title: MS-5 ACPI Controller

Size: Custom | Document Number: MS-6785 | Rev: 101

Date: Thursday, August 28, 2003 | Sheet 23 of 28

VRM10

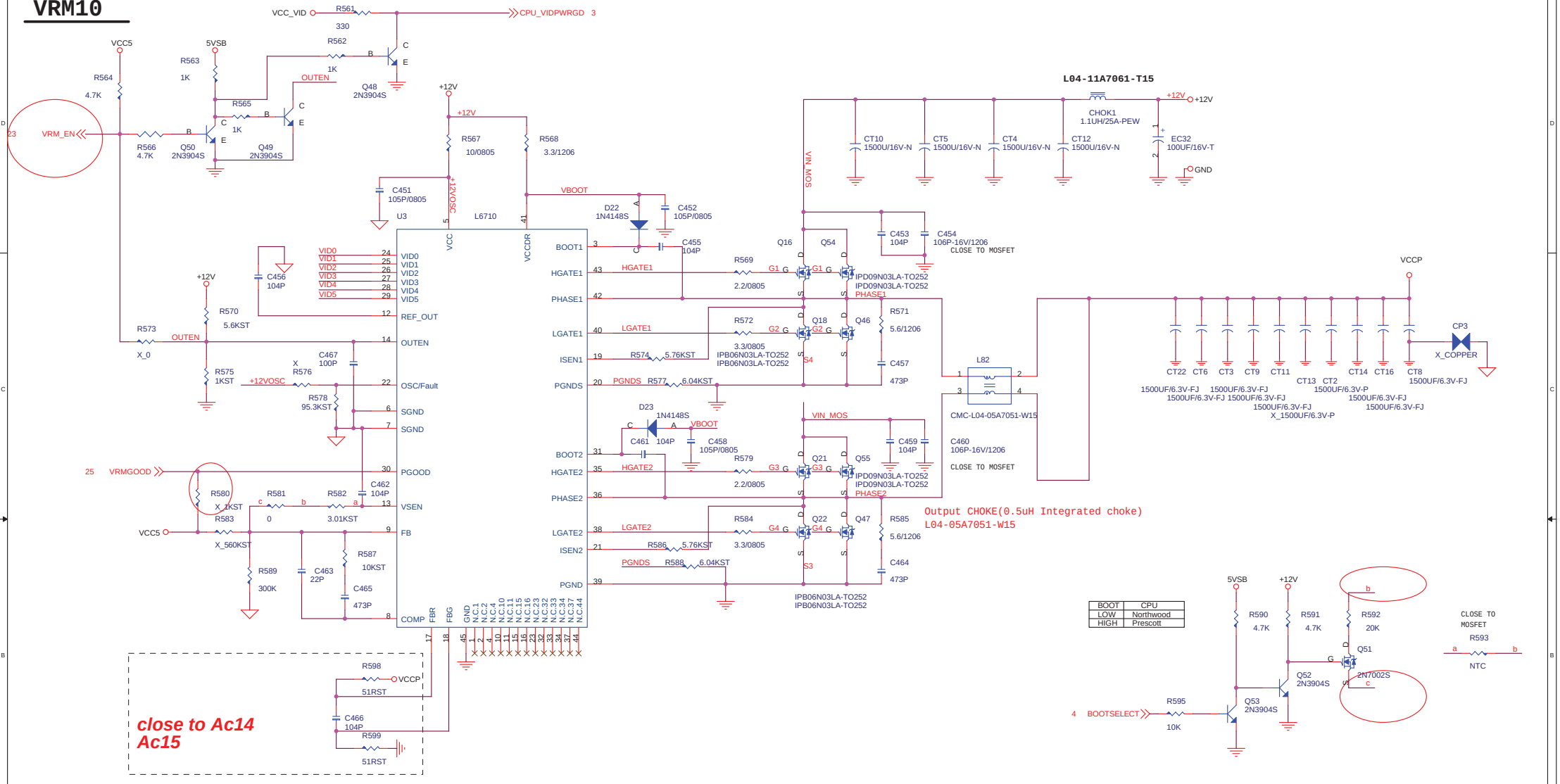

MICRO-STAR INT'L LO.,LTD.	
Title	VRM 10
Size	Document Number: MS-6785
Rev	101
Custom	
Date:	Thursday, August 28, 2003
Sheet	24 of 28

ATX CONNECTOR

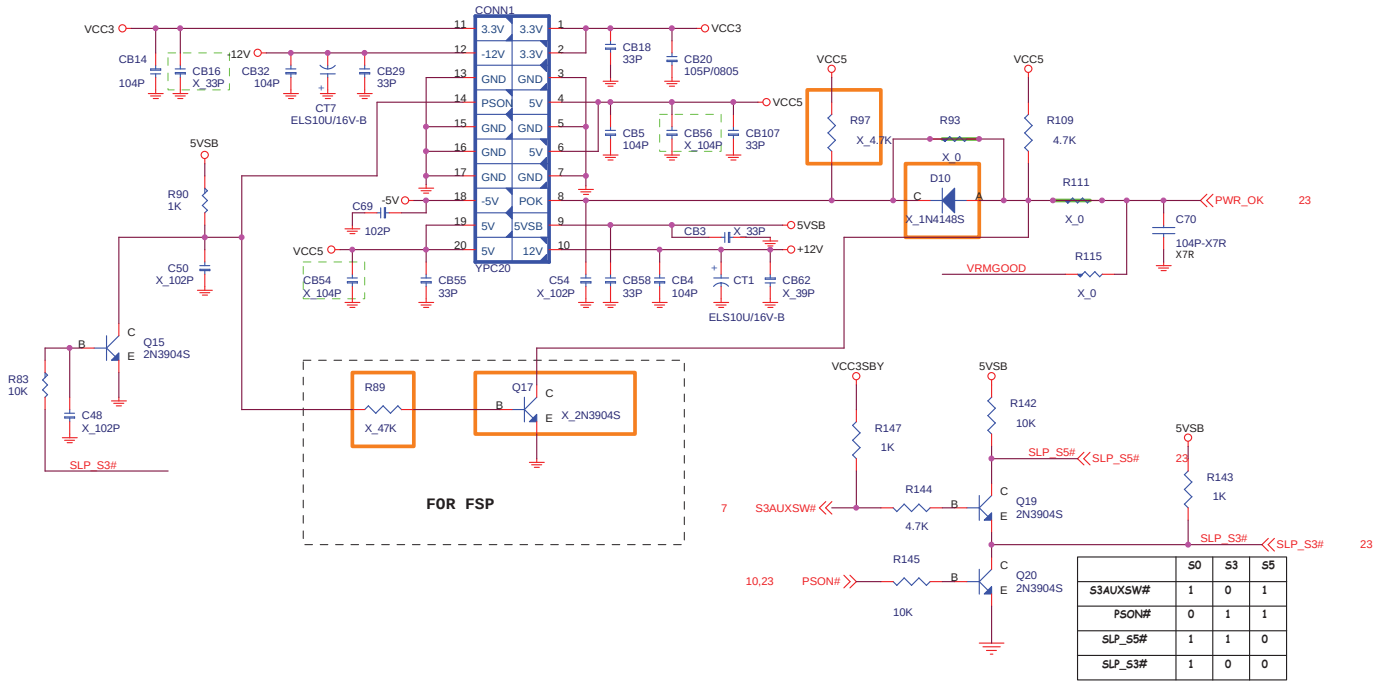

	S0	S3	S5
S3AUXSW#	1	0	1
PSON#	0	1	1
SLP_S5#	1	1	0
SLP_S3#	1	0	0

Brookdale FRONT PANEL-M

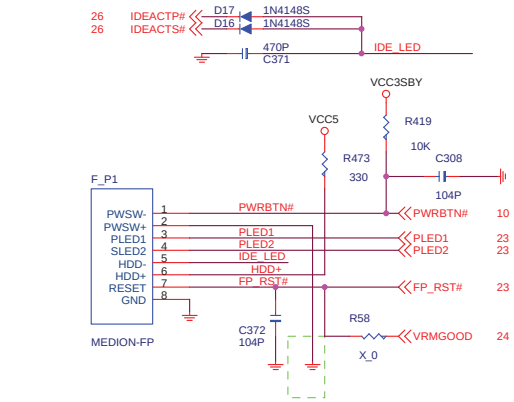

SPEAKER

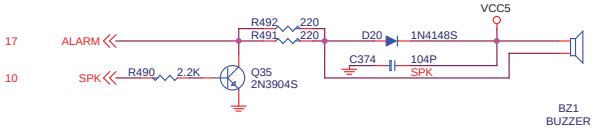

System Decoupling Capacitors

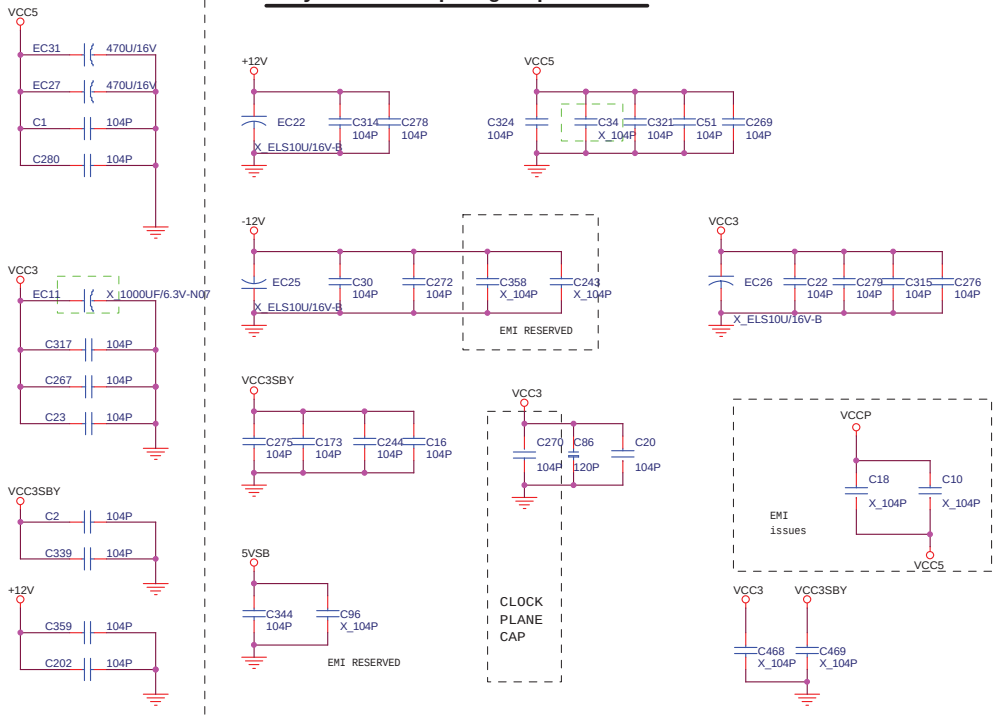

High Freq. return current decoupling

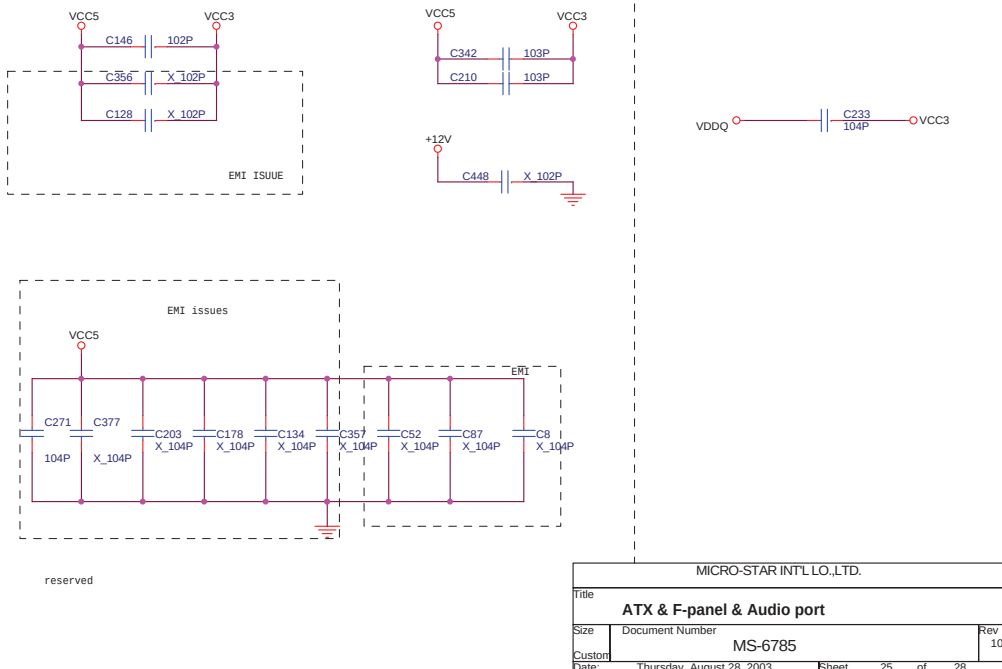

MICRO-STAR INT'L CO.,LTD.

Title: **ATX & F-panel & Audio port**

Size: Custom | Document Number: MS-6785 | Rev: 101

Date: Thursday, August 28, 2003 | Sheet 25 of 28

IDE1 & IDE2

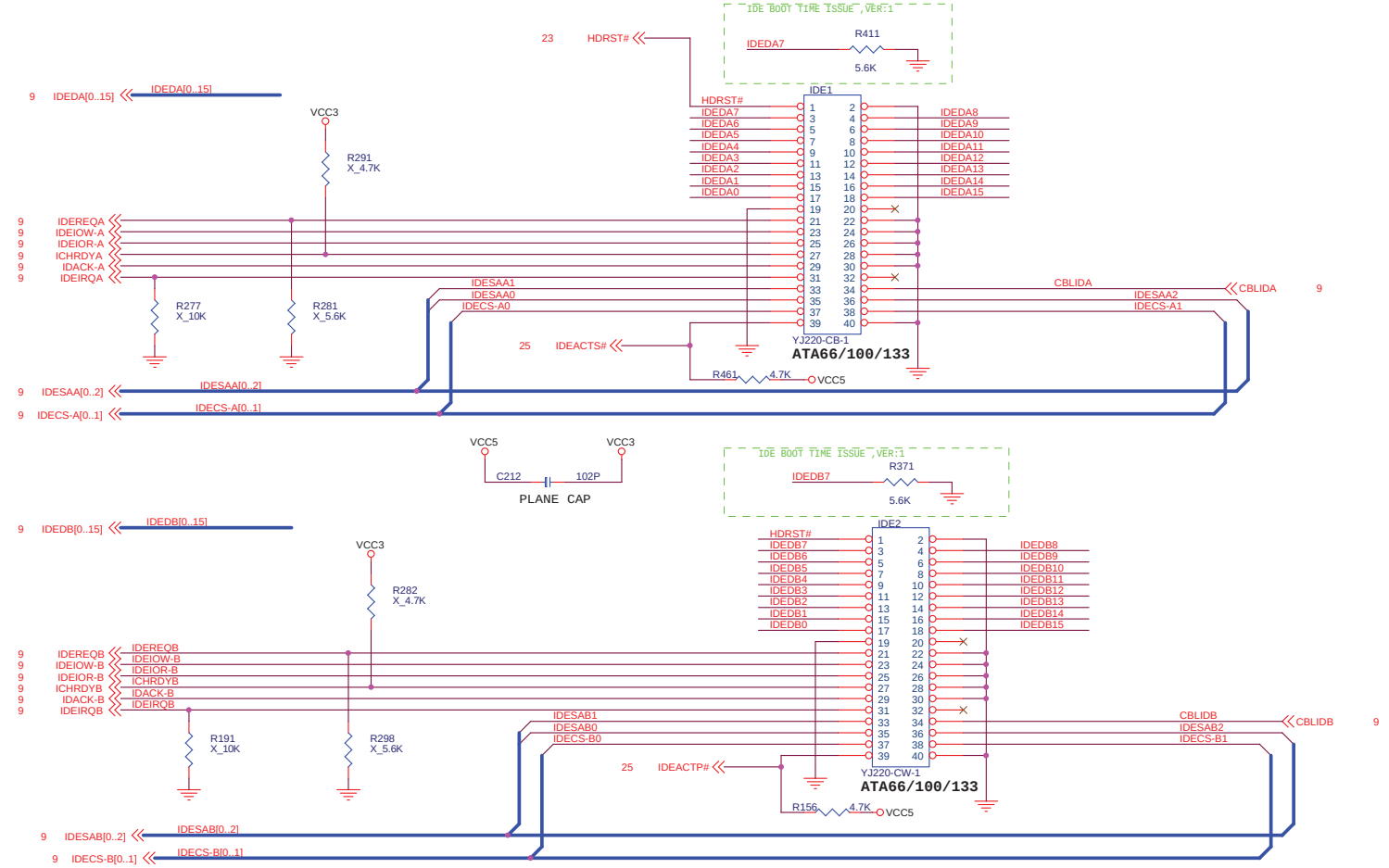

PS2 KB/MS

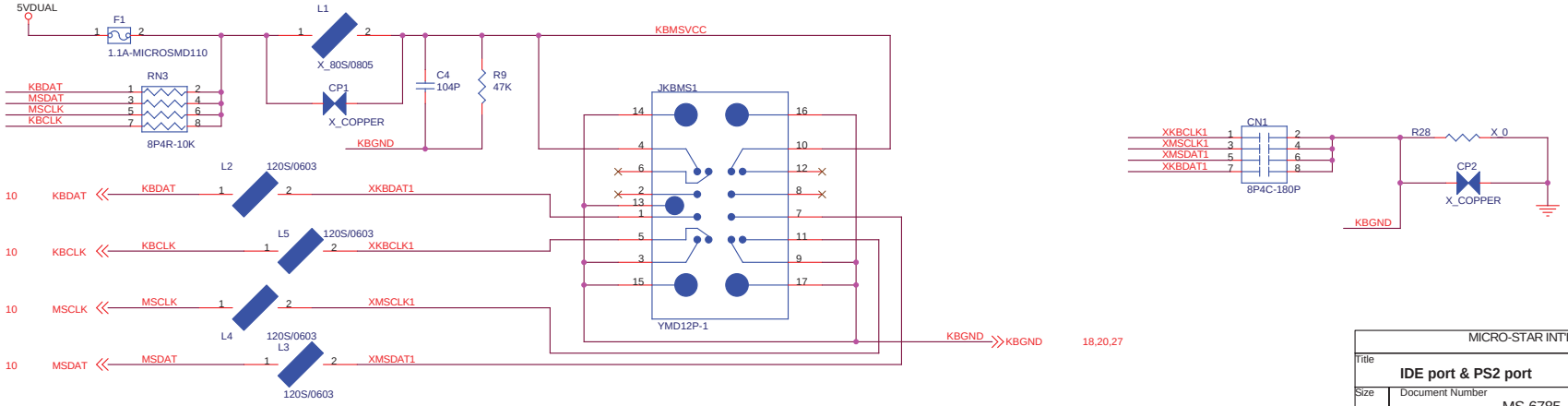

MICRO-STAR INT'L LO.,LTD.		
Title: IDE port & PS2 port		
Size: Custom	Document Number: MS-6785	Rev: 101
Date: Thursday, August 28, 2003	Sheet 26 of 28	

Parallel Port & COM1

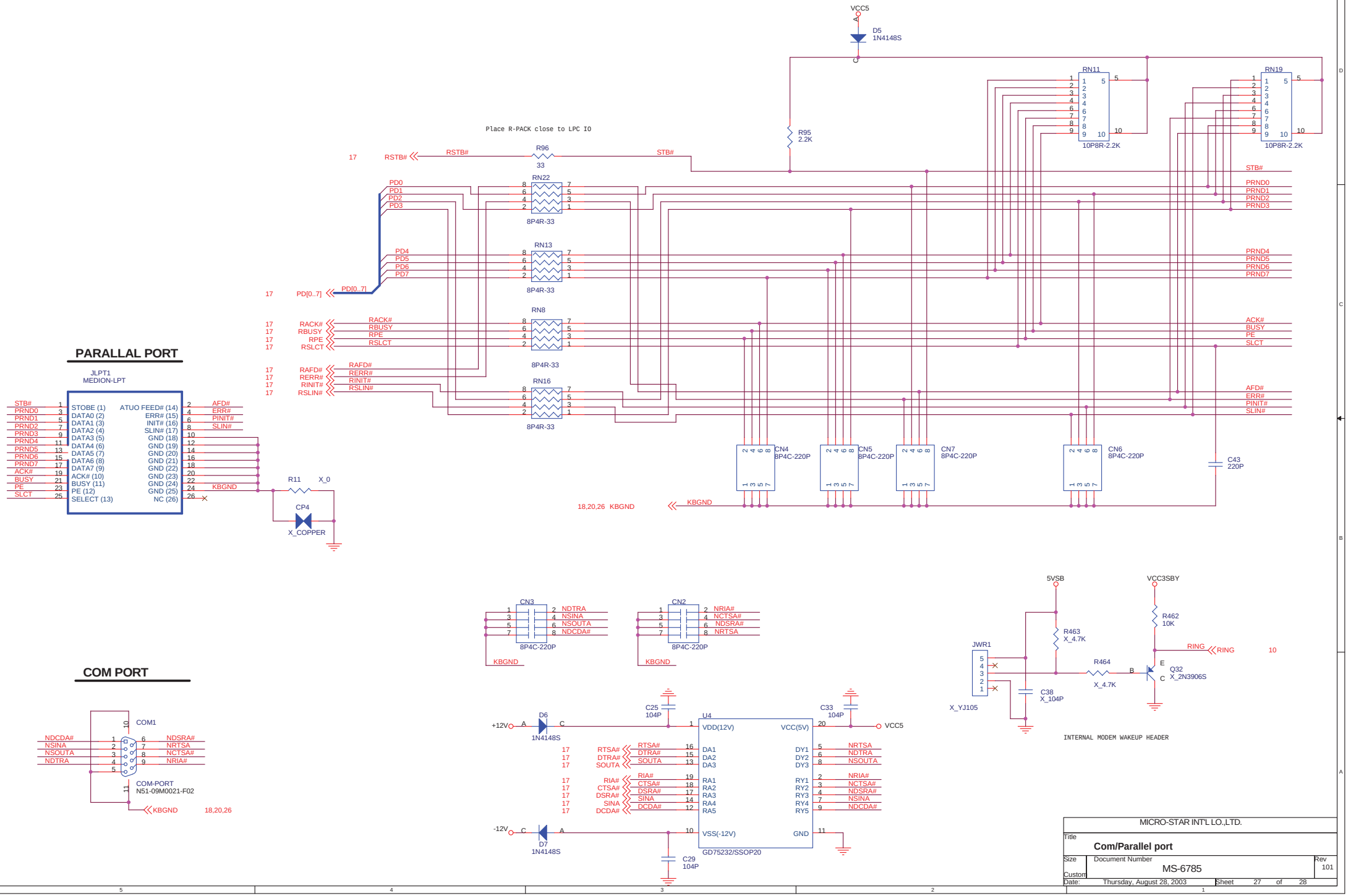

MICRO-STAR INT'L LO.,LTD.	
Title	Com/Parallel port
Size	Document Number: MS-6785
Rev	101
Custom	
Date:	Thursday, August 28, 2003
Sheet	27 of 28

MANUAL PART

BAT2[A]
BATTERY
YSKTBT

U9[A]
BIOS
FLASH-256K
M31-4900228-W03

PCB
MS-6785-101

U8[A]
MSI
DDR
SIS_648_H

Q54-Q16
X_TO252-H

Q46-Q18
TO252-H

Q47-Q22
TO252-H

Q21-Q55
X_TO252-H

JBAT1(1-2)
YJUMPER-MG

1-2 ENABLED
2-3 CLEAR CMOS

AL
JC-D2x2-GN

JAUDIO1(1-2),(3-4)

FP_1

1-2 PS-ON
3-4 PWR LED
5-6 HDD LED (6+)
7-8 RESET

X_U5-1
P4-BRACKET-2

X_U5-2
P4-RM-2

X_U5-3
P4-SCREW-2

X_U5-4
P4-SCREW-2

X_U5-5
P4-SCREW-2

X_U5-6
P4-SCREW-2

COMPONENT CHANGED LIST

MICRO-STAR INT'L LO.,LTD.		
Title: **Manual Part**		
Size: Custom	Document Number: MS-6785	Rev
Date: Monday, September 01, 2003	Sheet 28 of 28	