MS-6782 Ver:10A

CPU:
- Pentium4 socket-478 Processor

System Chipset:
- SIS648FX(NB) + SIS963LC1(SB)

On Board Function Chip:
- LPC I/O-W83697HF
- Audio Codec-Realtek ALC201A

Expansion Slot:
- AGP3.0 Slot*1
- PCI2.2 Slot*5

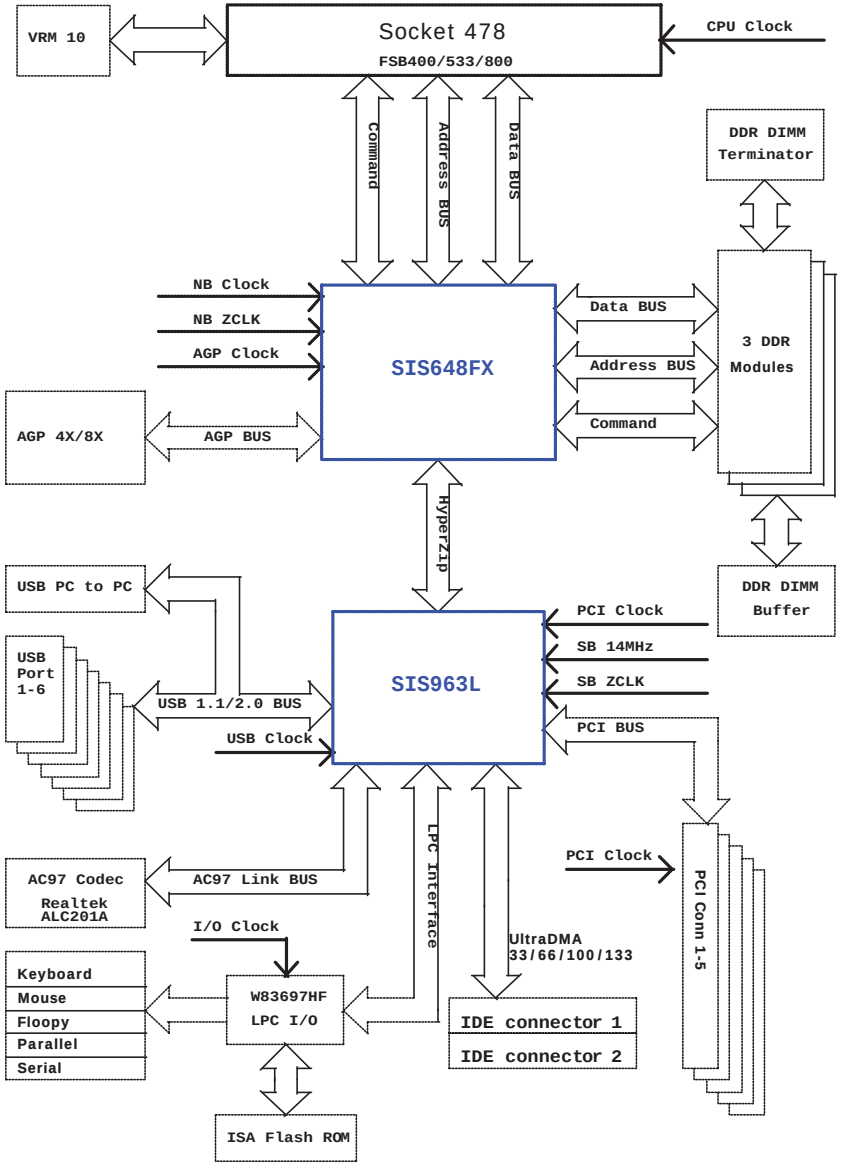

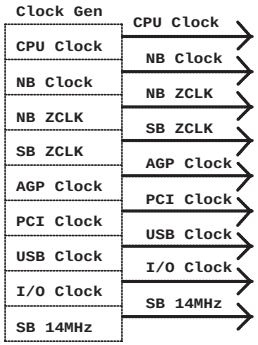

CONTENT

01-Block drigrame & Cover sheet
02-Power Div & Specification
03-Intel 478 CPU part 1
04-Intel 478 CPU part 2
05-Main Clock Gen.
06-Clock Buffer
07-VRM 10.0
08-SIS648FX-1 Host & AGP
09-SIS648FX-2 Memory
10-SIS648FX-3/4 Power & HyperZip
11-AGP slot & Pull-UP/DN resistor
12-DIMM 1 & 2
13-DIMM 3
14-DDR Terminator
15-SIS963L-1 PCI & IDE & HyperZip
16-SIS963L-2 MISC.
17-SIS963L-3/4 USN & Power
18-USB port
19-PCI slot 1& 2 &3
21-PCI slot 4 & 5
22-AC'97 CODEC
23-IDE1/2 & PS2
24-W83697HF I/O & BIOS
25-Com/Parallel port
26-ATX & F-Panel & Audio-port
27-MS5 ACPI Controller
28-Decoupling Capacitor
29-Manual part & GPIO define
30-Revision History

SamSung Electronics

Title: Cover Sheet & Block Diagram

Size: Custom | Document Number: Euclid2 (MS-6782) | Rev: 10A

Date: Wednesday, October 29, 2003 | Sheet 1 of 30

Power Delivery Map

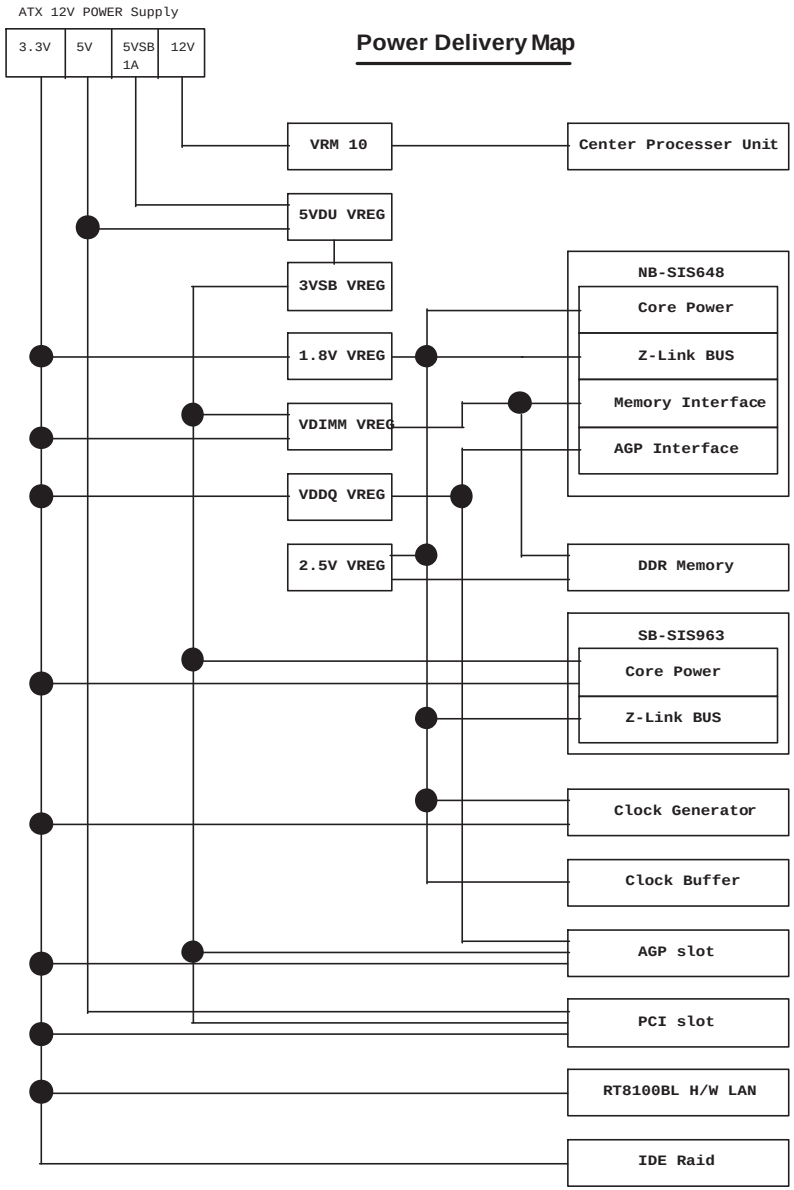

SamSung Electronics		
Title: Power Delivery		
Size: Custom	Document Number: Euclid2 (MS-6782)	Rev: 10A
Date: Wednesday, October 29, 2003	Sheet 2 of 30	

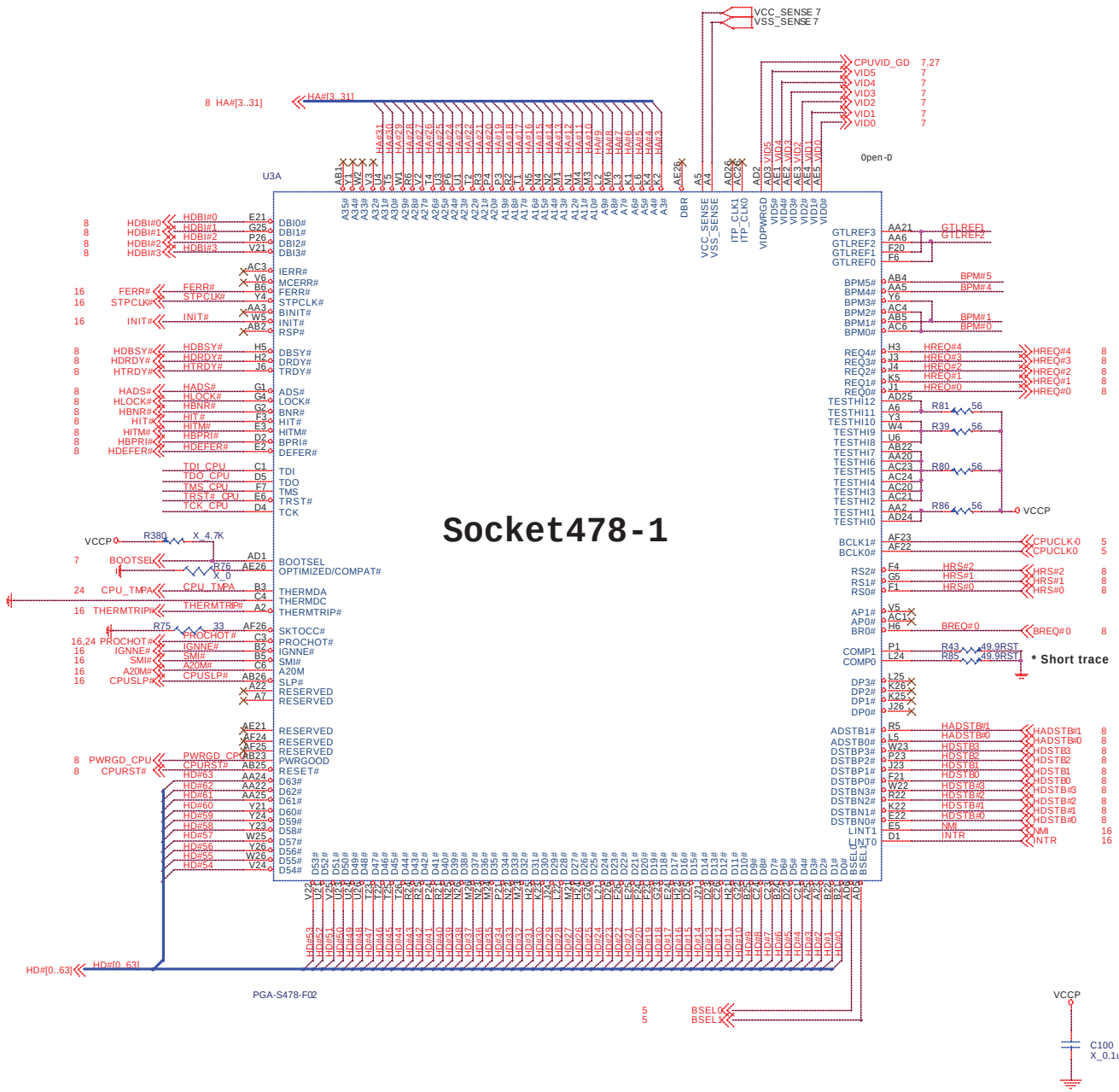

CPU GTL REFERNCE VOLTAGE BLOCK

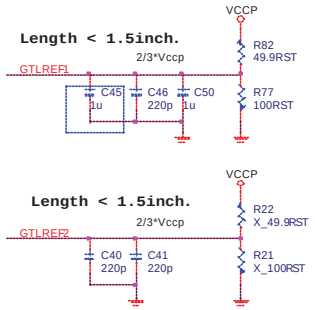

Every pin put one 220pF cap near it.

Trace Width 15mils, Space 15mils.

Keep the voltage dividers within 1.5 inches of the first GTLREF Pin

CPU STRAPPING RESISTORS

CLOSED TO SOCKET478

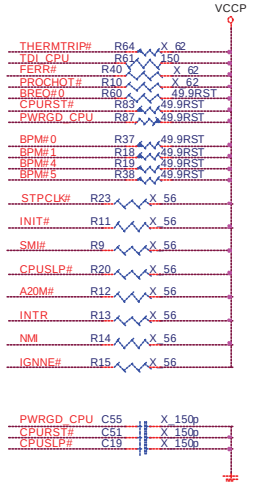

CPU ITP BLOCK

CLOSED TO SOCKET478

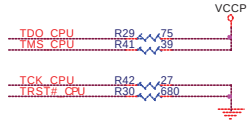

SamSung Electronics

Title	FCPGA478-1		
Size	Document Number		Rev
Custom	Euclid2 (MS-6782)		10A
Date: Wednesday, October 29, 2003	Sheet 3 of 30		

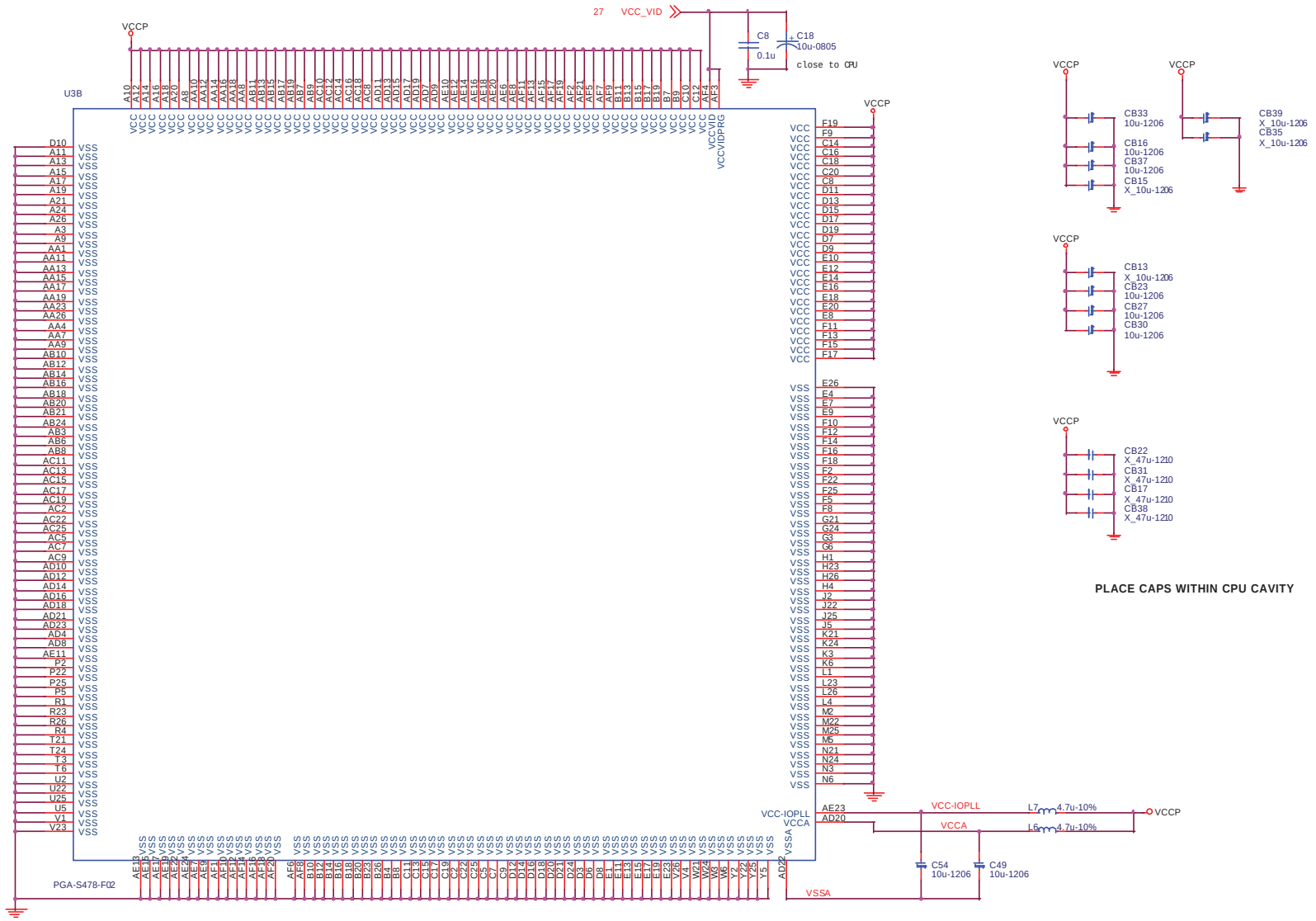

SamSung Electronics	
Title	FCPGA478-2
Size: Custom	Document Number: Euclid2 (MS-6782)
Rev	10A
Date: Wednesday, October 29, 2003	Sheet 4 of 30

Main Clock Generator

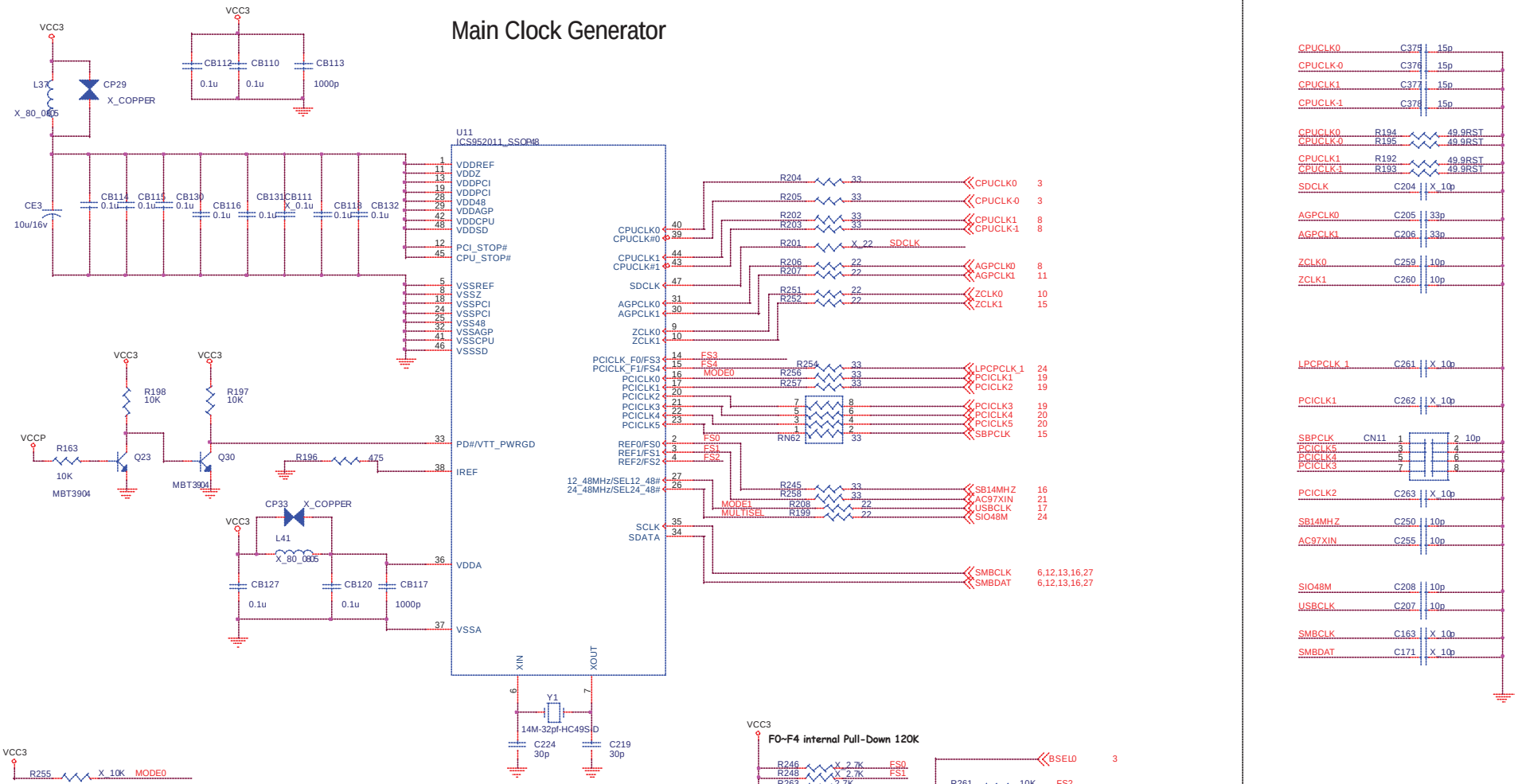

VCC3

R255 X_10K MODE0

MODE0:
1 : pin12=PCICLK
0 : pin12=PCI_STOP#
(internal pull-up 120K resistor)

R209 10K MODE1

MODE1:
0 : Pin45=CPU_STOP# ,Pin33=PD#/VTT_PWRGD
1 : Pin33=CPU_STOP# ,Pin45=PD#/VTT_PWRGD
(internal pull-up 120K resistor)

MULTISEL internal Pull-Up 120K

MULTISEL R211 X_4.7K VCC3
R210 X_4.7K

VCC3

F0~F4 internal Pull-Down 120K

R246 X_2.7K FS0 BSEL0 3
R248 X_2.7K FS1
R263 2.7K
R264 2.7K
R265 X_2.7K FS4 BSEL1 3
R261 10K FS2
R253 10K FS3

FS4	FS3	FS2	FS1	FS0	CPU	SDRAM	ZCLK 952005/952011	AGP	PCI
0	0	0	0	0	100	100	80/66	66	33
0	0	1	0	0	133	100	80/66	66	33
0	1	0	0	0	166	100	80/66	66	33
0	1	1	0	0	200	100	80/66	66	33

SamSung Electronics

Title: **Main Clock Gen.**

Size: Custom | Document Number: Euclid2 (MS-6782) | Rev: 10A

Date: Wednesday, October 29, 2003 | Sheet 5 of 30

Clock Buffer (DDR)

(OPTIONS)
1: (ICS-93705)

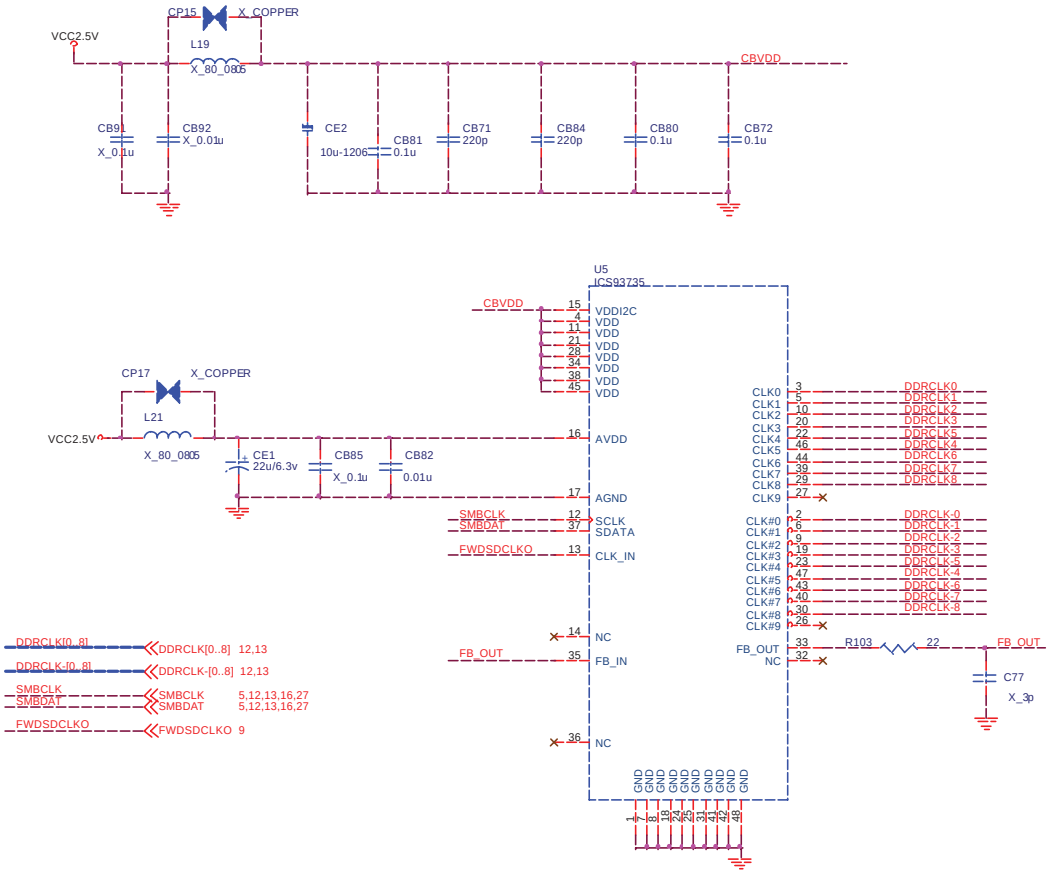

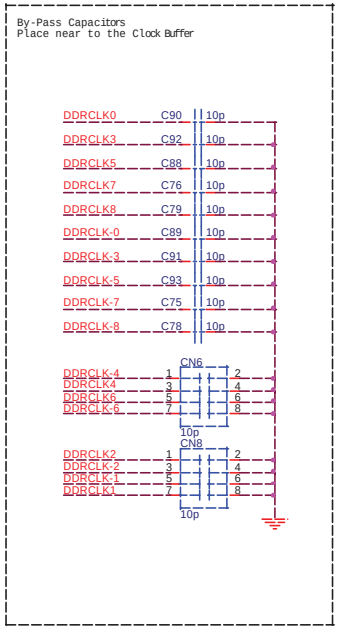

SamSung Electronics	
Title	Clock Buffer
Size: Custom	Document Number: Euclid2 (MS-6782)
Rev	10A
Date: Wednesday, October 29, 2003	Sheet 6 of 30

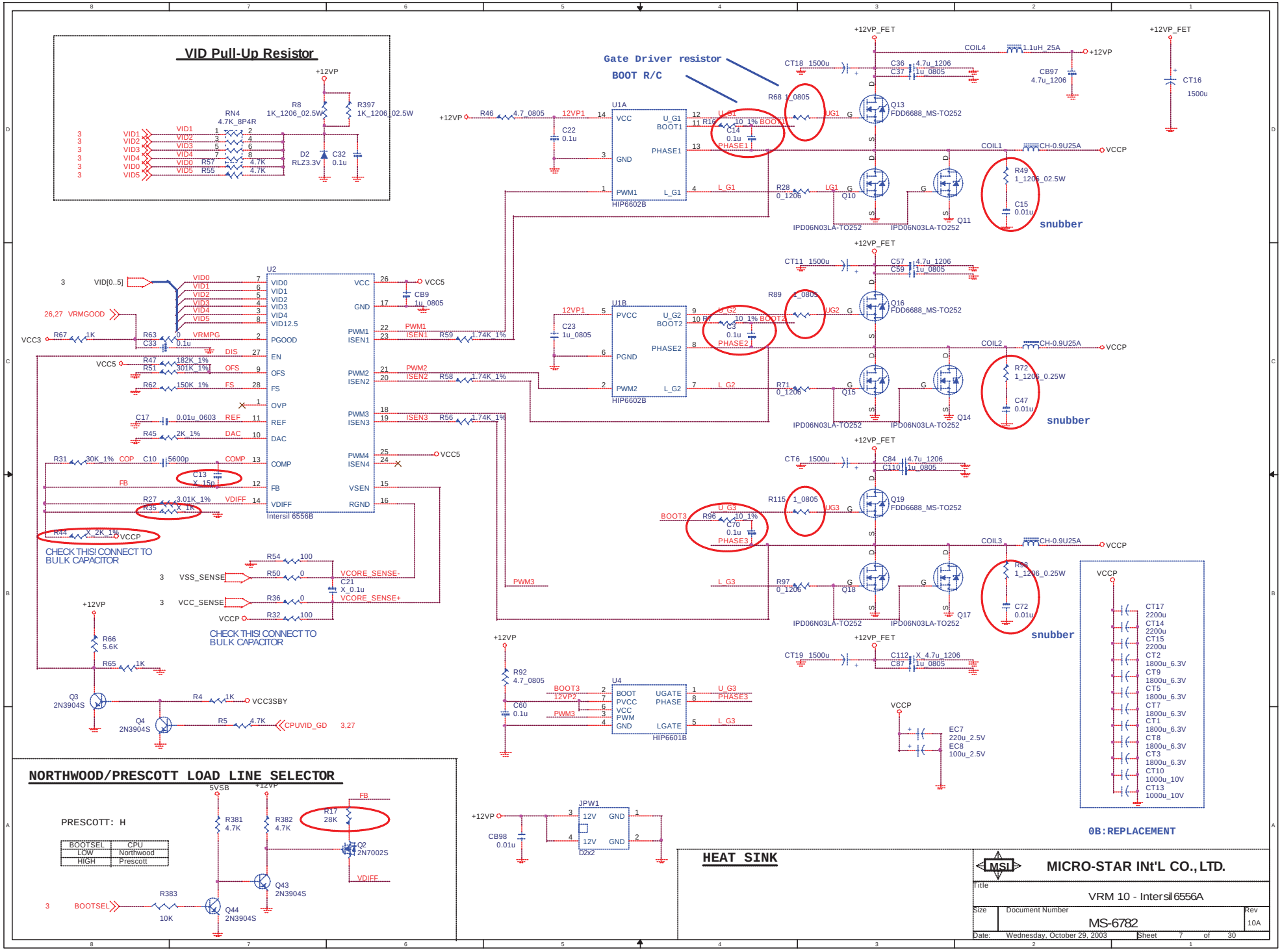
VID Pull-Up Resistor
Gate Driver resistor
BOOT R/C
U2
Intersil 6556B
U1A
U1B
U4
HIP6602B
HIP6601B
Q13 FDD6688_MS-TO252
Q16 FDD6688_MS-TO252
Q19 FDD6688_MS-TO252
IPD06N03LA-TO252
snubber
CHECK THIS! CONNECT TO BULK CAPACITOR
NORTHWOOD/PRESCOTT LOAD LINE SELECTOR
PRESCOTT: H
BOOTSEL LOW Northwood
BOOTSEL HIGH Prescott
HEAT SINK
0B:REPLACEMENT
MICRO-STAR INt'L CO., LTD.
Title
VRM 10 - Intersil 6556A
Size
Document Number
MS-6782
Rev
10A
Date: Wednesday, October 29, 2003
Sheet 7 of 30

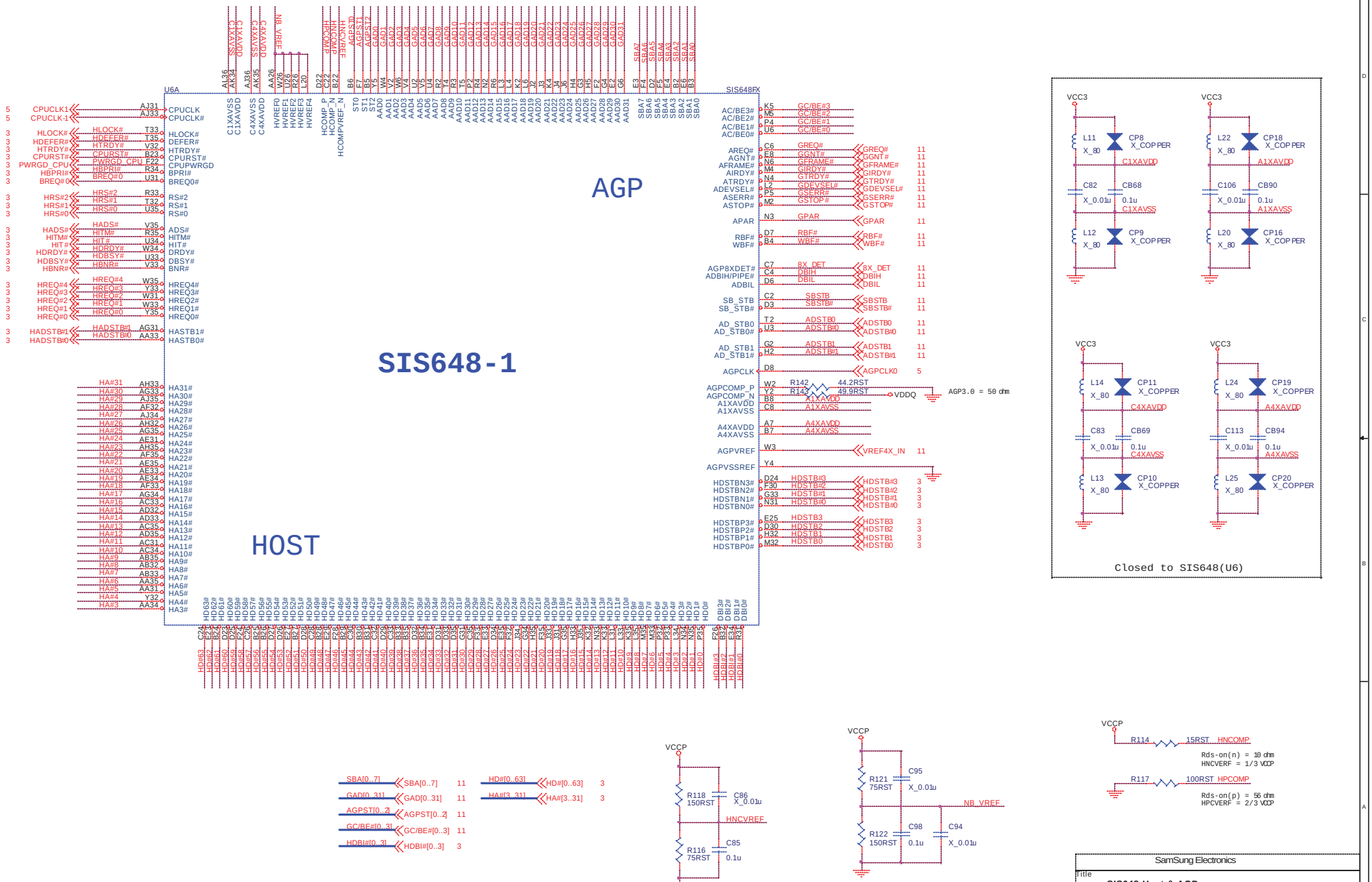
SIS648-1
HOST
AGP
U6A
SIS648FX
CPUCLK1
CPUCLK-1
HLOCK#
HDEFER#
HTRDY#
CPURST#
PWRGD_CPU
HBPRI#
BREQ#0
HRS#2
HRS#1
HRS#0
HADS#
HITM#
HIT#
HDRDY#
HDBSY#
HBNR#
HREQ#4
HREQ#3
HREQ#2
HREQ#1
HREQ#0
HADSTB#1
HADSTB#0
HA#31
HA#30
HA#29
HA#28
HA#27
HA#26
HA#25
HA#24
HA#23
HA#22
HA#21
HA#20
HA#19
HA#18
HA#17
HA#16
HA#15
HA#14
HA#13
HA#12
HA#11
HA#10
HA#9
HA#8
HA#7
HA#6
HA#5
HA#4
HA#3
AC/BE3#
AC/BE2#
AC/BE1#
AC/BE0#
AREQ#
AGNT#
AFRAME#
AIRDY#
ATRDY#
ADEVSEL#
ASERR#
ASTOP#
APAR
RBF#
WBF#
AGP8XDET#
ADBIH/PIPE#
ADBIL
SB_STB
SB_STB#
AD_STB0
AD_STB0#
AD_STB1
AD_STB1#
AGPCLK
AGPCOMP_P
AGPCOMP_N
A1XAVDD
A1XAVSS
A4XAVDD
A4XAVSS
AGPVREF
AGPVSSREF
HDSTBN3#
HDSTBN2#
HDSTBN1#
HDSTBN0#
HDSTBP3#
HDSTBP2#
HDSTBP1#
HDSTBP0#
VDDQ
AGP3.0 = 50 ohm
VCC3
C1XAVDD
C4XAVDD
NB_VREF
HNCOMP
HNCVREF
HCOMP_P
HCOMP_N
HCOMPVREF_N
VCCP
SBA[0..7]
GAD[0..31]
AGPST[0..2]
GC/BE#[0..3]
HDBI#[0..3]
HD#[0..63]
HA#[3..31]
R118 150RST
R116 75RST
C86 X_0.01u
C85 0.1u
R121 75RST
R122 150RST
C95 X_0.01u
C98 0.1u
C94 X_0.01u
R114 15RST
R117 100RST
HPCOMP
Rds-on(n) = 10 ohm
HNCVERF = 1/3 VCCP
Rds-on(p) = 56 ohm
HPCVERF = 2/3 VCCP
L11 X_80
CP8 X_COPPER
C82 X_0.01u
CB68 0.1u
L12 X_80
CP9 X_COPPER
L22 X_80
CP18 X_COPPER
C106 X_0.01u
CB90 0.1u
L20 X_80
CP16 X_COPPER
L14 X_80
CP11 X_COPPER
C83 X_0.01u
CB69 0.1u
L13 X_80
CP10 X_COPPER
L24 X_80
CP19 X_COPPER
C113 X_0.01u
CB94 0.1u
L25 X_80
CP20 X_COPPER
Closed to SIS648(U6)
SamSung Electronics
Title
SIS648-Host & AGP
Size
Document Number
Euclid2 (MS-6782)
Rev
10A
Custom
Date: Wednesday, October 29, 2003
Sheet 8 of 30

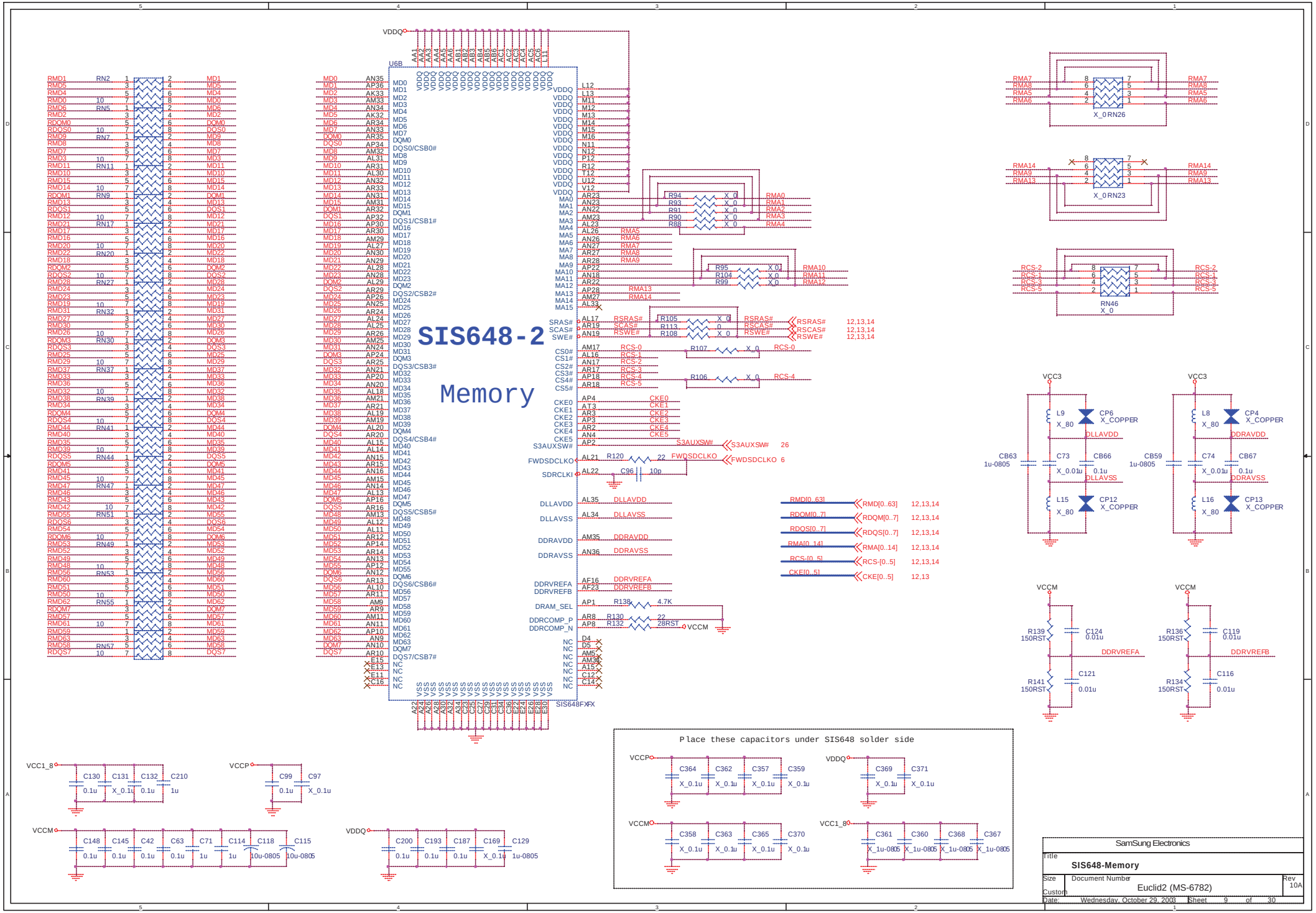
SIS648-2
Memory
U6B
SIS648FXFX
Place these capacitors under SIS648 solder side
SamSung Electronics
Title
SIS648-Memory
Size
Custom
Document Number
Euclid2 (MS-6782)
Rev
10A
Date: Wednesday, October 29, 2003
Sheet 9 of 30

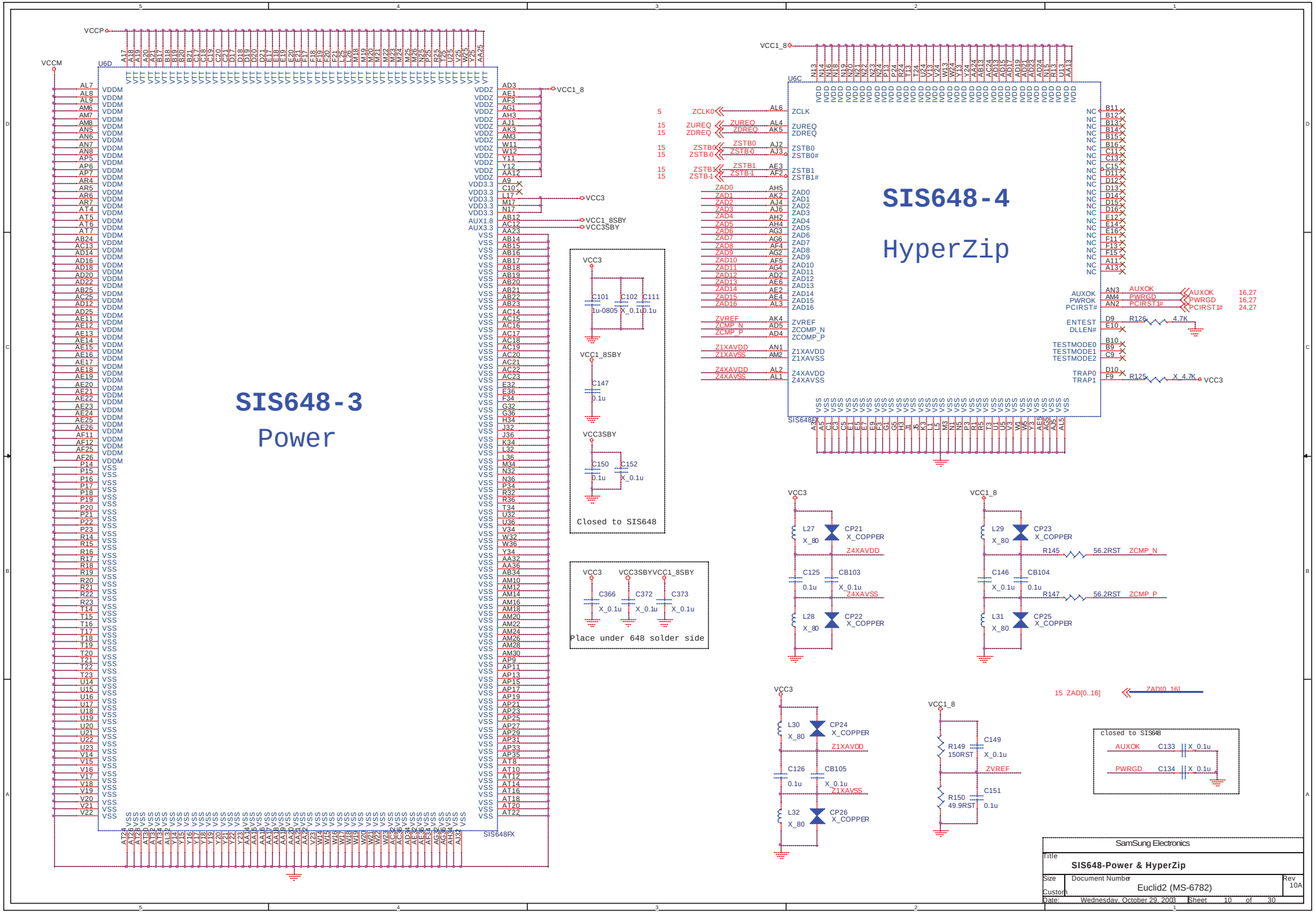
SIS648-3
Power
SIS648-4
HyperZip
U6D
U6C
SIS648FX
VCCP
VCCM
VCC1_8
VCC3
VCC1_8SBY
VCC3SBY
Closed to SIS648
Place under 648 solder side
closed to SIS648
ZAD[0..16]
SamSung Electronics
Title
SIS648-Power & HyperZip
Size
Custom
Document Number
Euclid2 (MS-6782)
Rev
10A
Date: Wednesday, October 29, 2003
Sheet 10 of 30

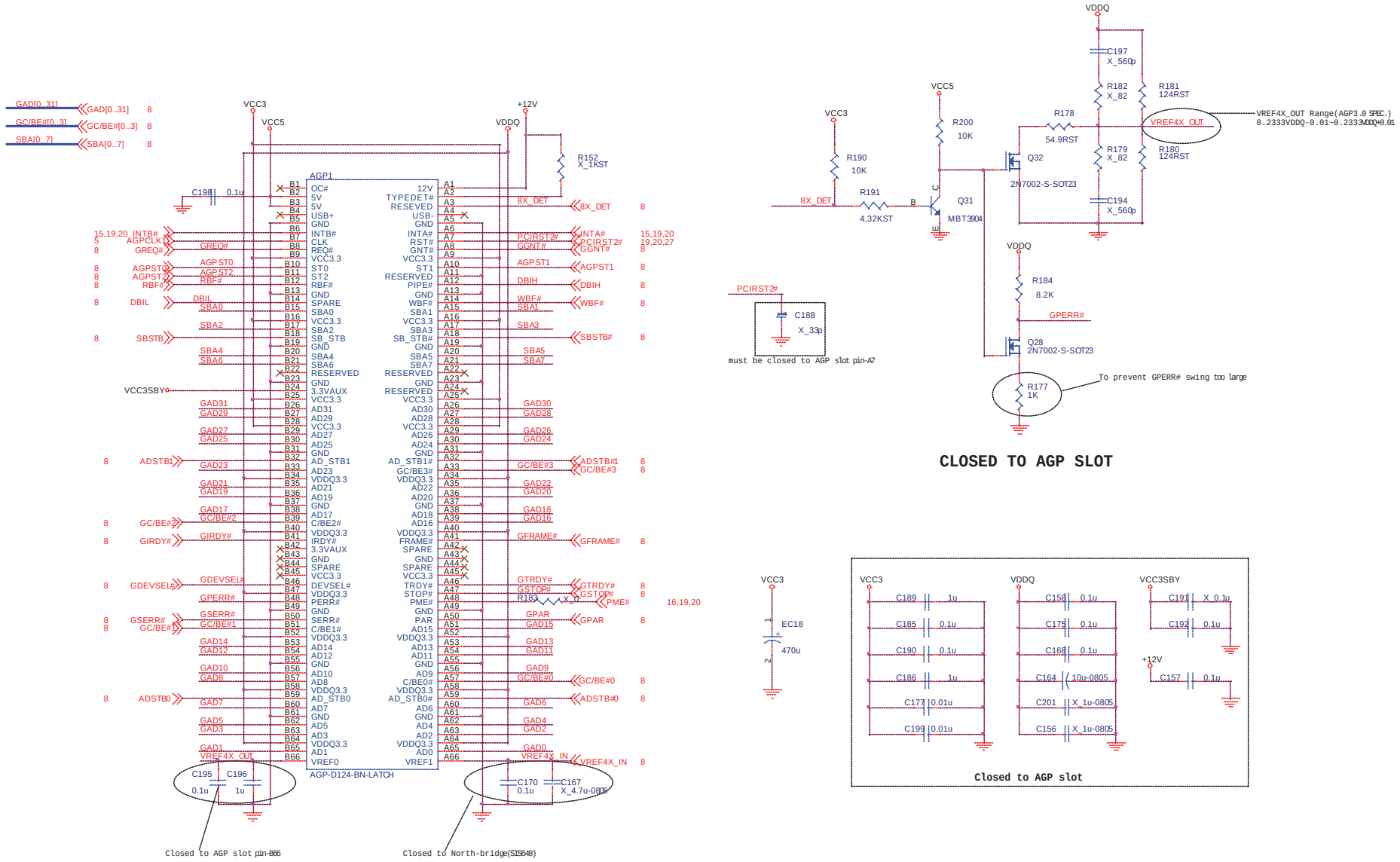

SamSung Electronics	
Title	AGP Slot & Pull up/dn resistor
Size: Custom	Document Number: Euclid2 (MS-6782)
Rev	10A
Date: Wednesday, October 29, 2003	Sheet 11 of 30

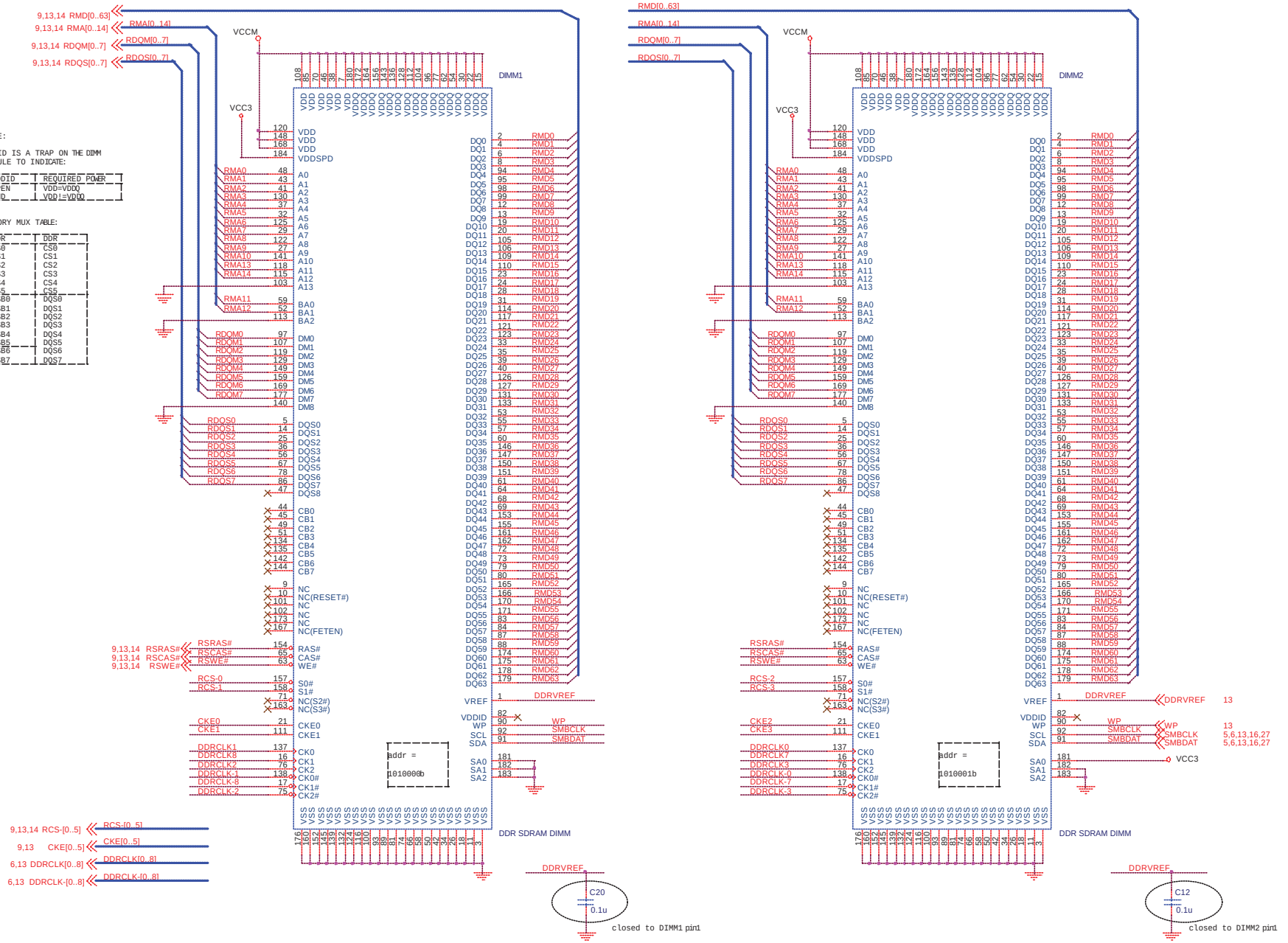

SamSung Electronics

Title: **DDR DIMM1 & 2**

Size: Custom | Document Number: Euclid2 (MS-6782) | Rev: 10A

Date: Wednesday, October 29, 2003 | Sheet 12 of 30

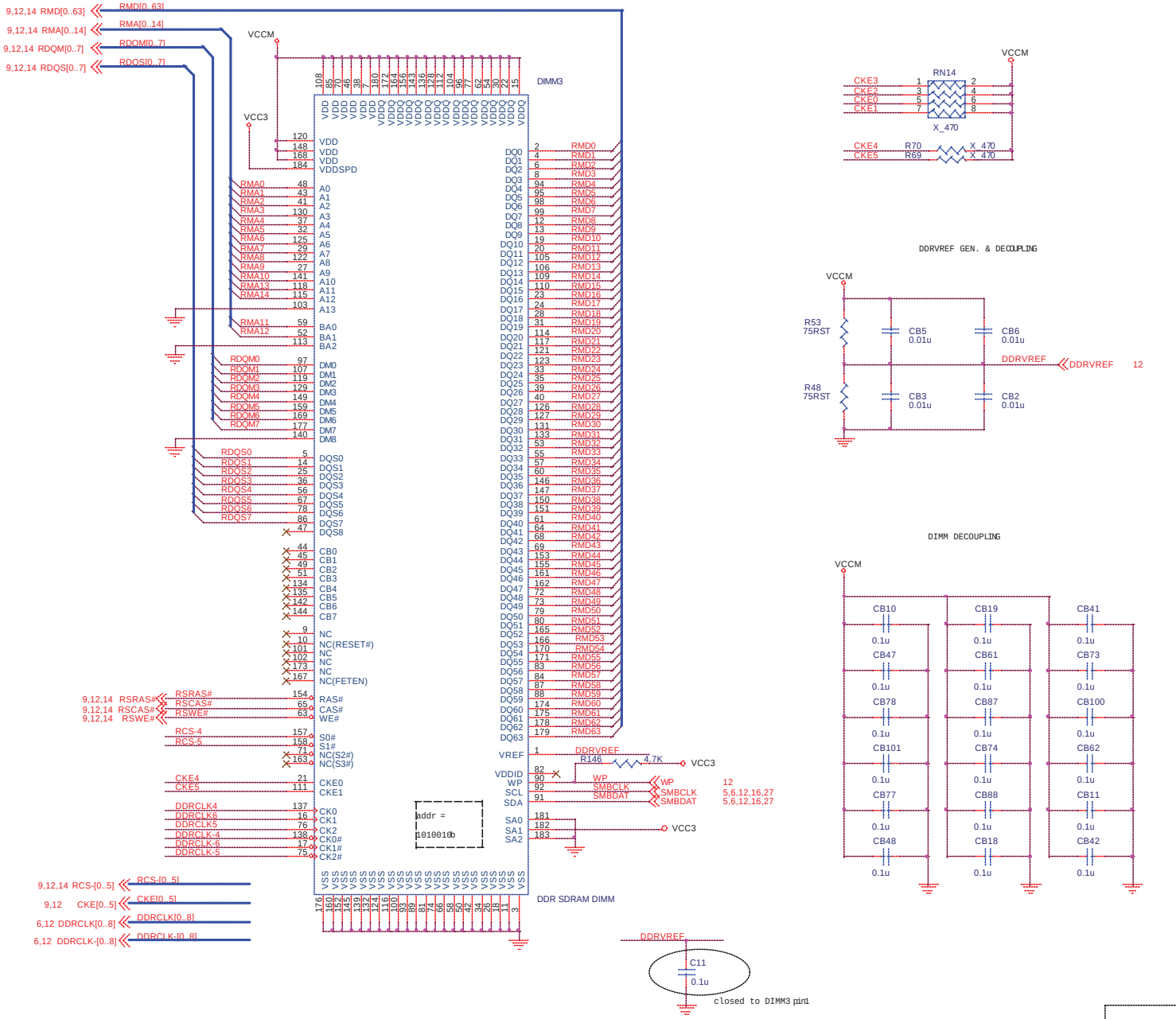

SamSung Electronics	
Title	DDR DIMM3
Size: Custom	Document Number: Euclid2 (MS-6782)
Rev	10A
Date: Wednesday, October 29, 2003	Sheet 13 of 30

SSTL-2 Termination Resistors

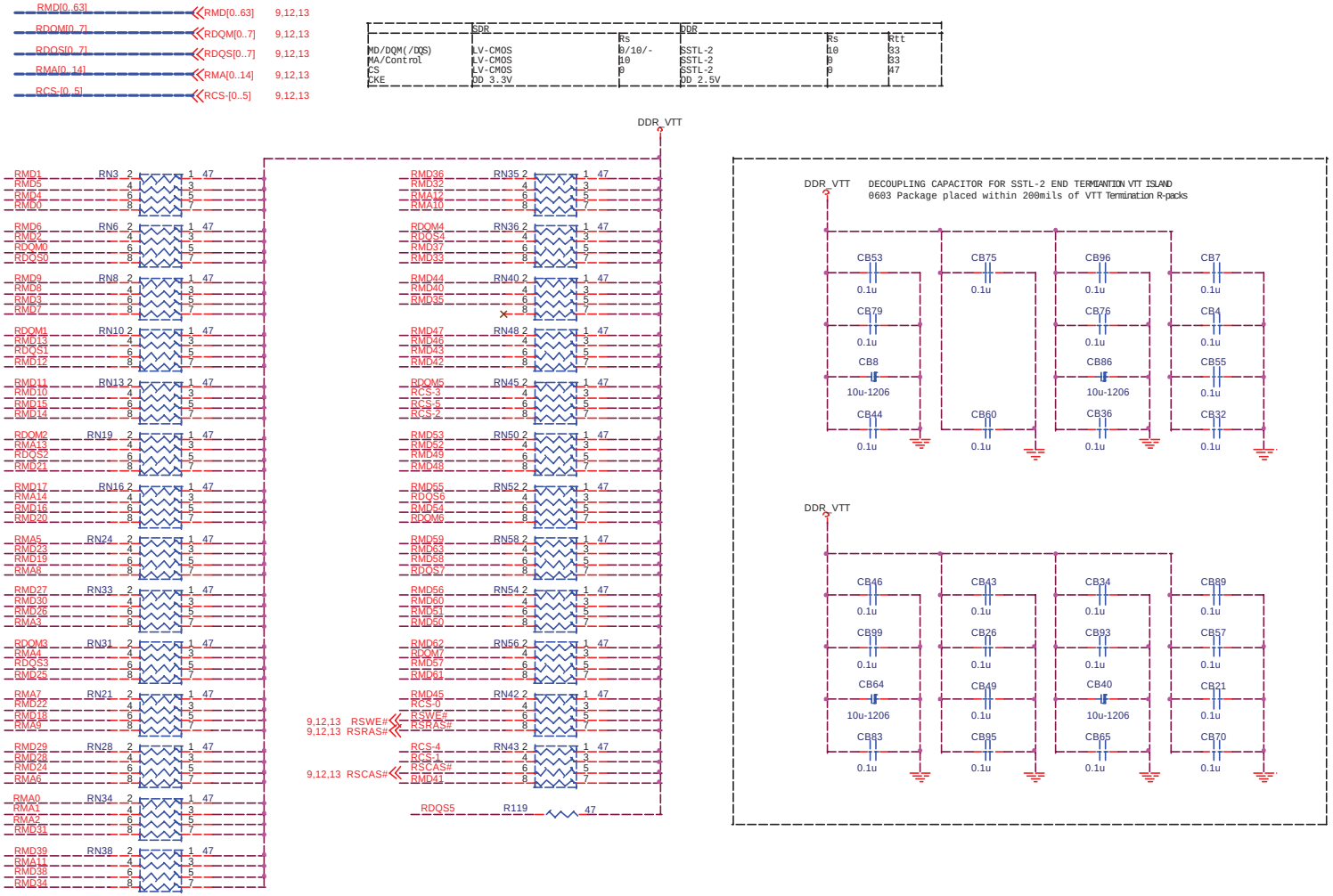

SamSung Electronics

Title: **DDR Terminator**

Size: Custom | Document Number: Euclid2 (MS-6782) | Rev: 10A

Date: Wednesday, October 29, 2003 | Sheet 14 of 30

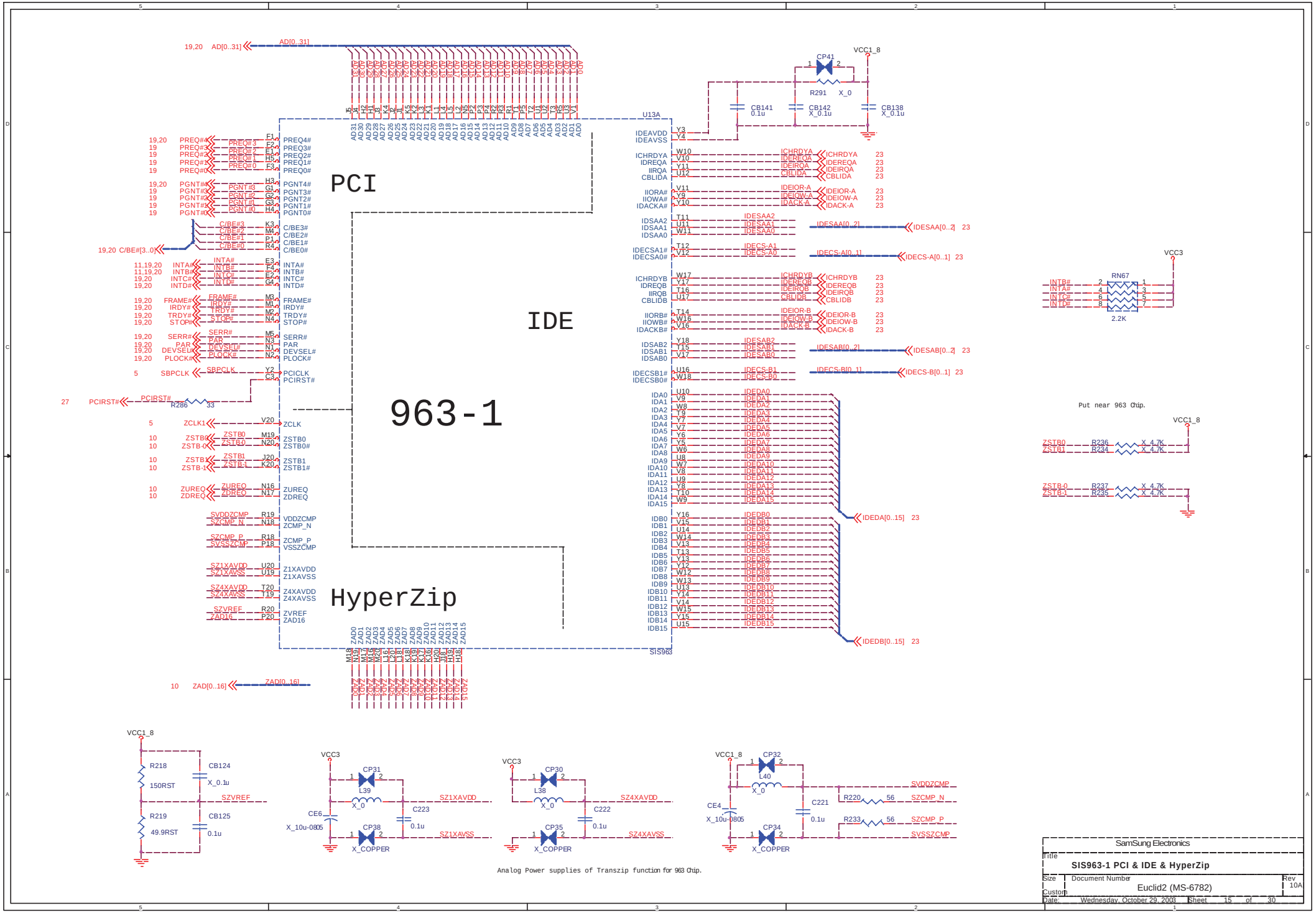
PCI
IDE
963-1
HyperZip
U13A
SIS963
AD[0..31]
ZAD[0..16]
IDEDA[0..15]
IDEDB[0..15]
IDESAA[0..2]
IDESAB[0..2]
IDECS-A[0..1]
IDECS-B[0..1]
VCC1_8
VCC3
CP41
R291
X_0
CB141
0.1u
CB142
X_0.1u
CB138
X_0.1u
RN67
2.2K
Put near 963 Chip.
R236
R234
R237
R235
X_4.7K
R286
33
R218
150RST
R219
49.9RST
CB124
CB125
X_0.1u
0.1u
SZVREF
CP31
CP38
CP30
CP35
CP32
CP34
L39
L38
L40
SZ1XAVDD
SZ1XAVSS
SZ4XAVDD
SZ4XAVSS
SVDDZCMP
SZCMP_N
SZCMP_P
SVSSZCMP
C223
C222
C221
CE6
CE4
X_10u-0805
X_COPPER
R220
R233
56
Analog Power supplies of Transzip function for 963 Chip.
SamSung Electronics
Title
SIS963-1 PCI & IDE & HyperZip
Size
Document Number
Euclid2 (MS-6782)
Rev
10A
Custom
Date: Wednesday, October 29, 2003
Sheet 15 of 30

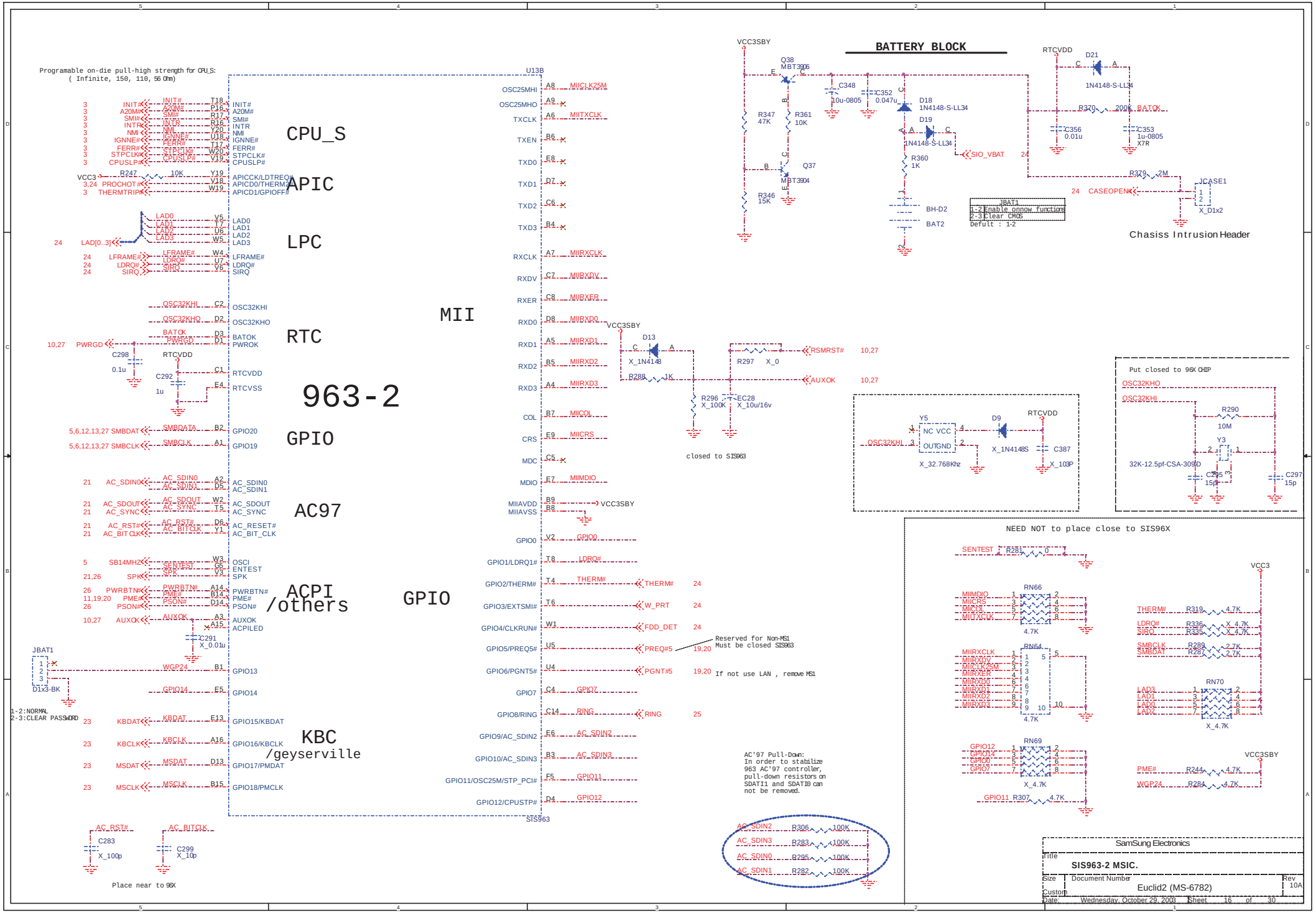
Programable on-die pull-high strength for CPU_S:
(Infinite, 150, 110, 56 Ohm)
CPU_S
APIC
LPC
RTC
963-2
GPIO
AC97
ACPI
/others
KBC
/geyserville
MII
GPIO
U13B
SIS963
BATTERY BLOCK
Chasiss Intrusion Header
closed to SIS963
Reserved for Non-MSI
Must be closed SIS963
If not use LAN , remove MSI
AC'97 Pull-Down:
In order to stabilize
963 AC'97 controller,
pull-down resistors on
SDATI1 and SDATI0 can
not be removed.
Put closed to 96X CHIP
NEED NOT to place close to SIS96X
Place near to 96X
1-2:NORMAL
2-3:CLEAR PASSWORD
JBAT1
1-2:Enable onnow functions
2-3:Clear CMOS
Defult : 1-2
SamSung Electronics
Title
SIS963-2 MSIC.
Size
Document Number
Euclid2 (MS-6782)
Rev
10A
Custom
Date: Wednesday, October 29, 2003
Sheet 16 of 30

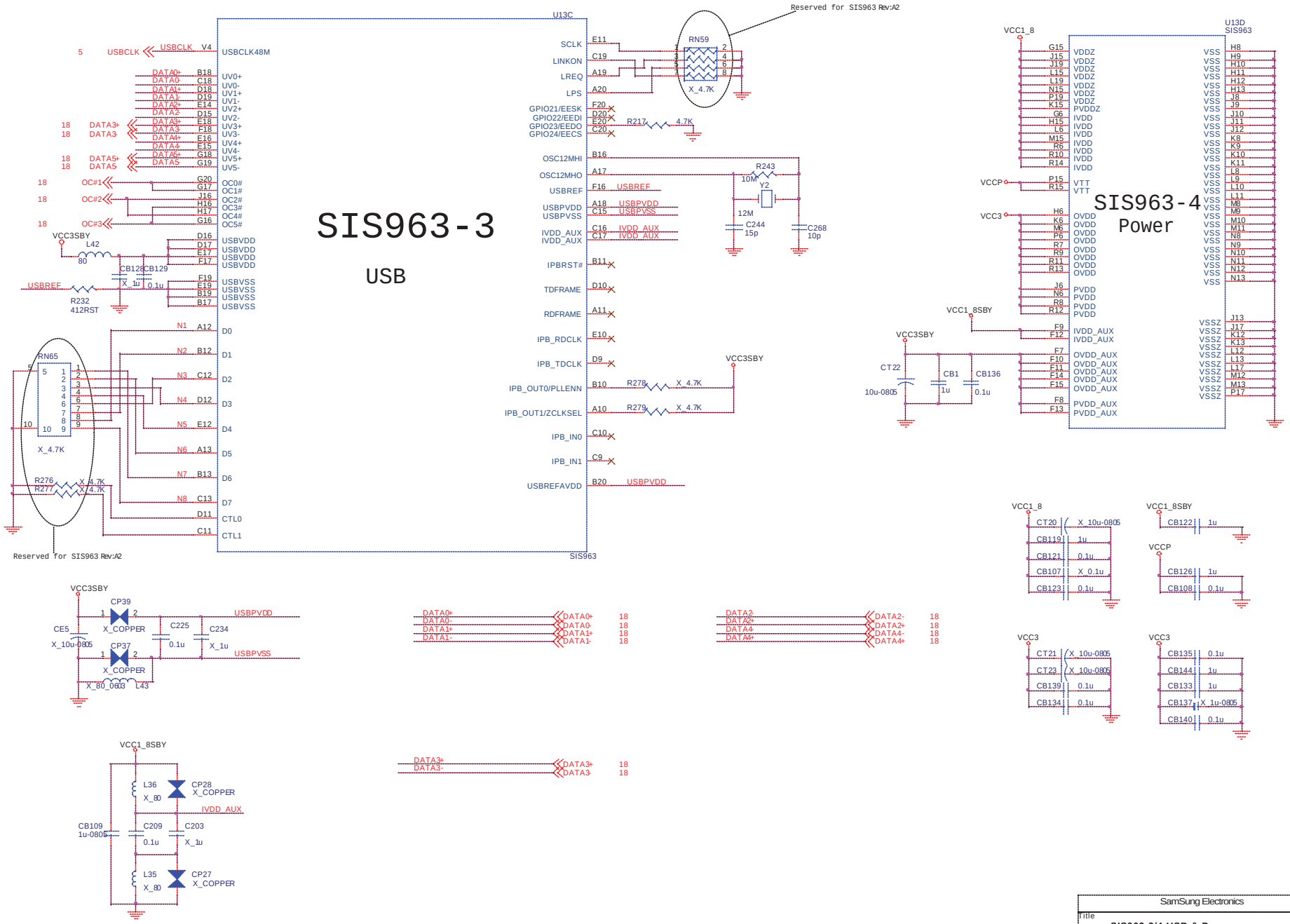
SIS963-3
USB
U13C
SIS963
SIS963-4
Power
U13D
SIS963
Reserved for SIS963 Rev:A2
USBCLK
USBCLK48M
DATA0+
DATA0-
DATA1+
DATA1-
DATA2+
DATA2-
DATA3+
DATA3-
DATA4+
DATA4-
DATA5+
DATA5-
OC#1
OC#2
OC#3
USBREF
USBPVDD
USBPVSS
IVDD_AUX
IPBRST#
TDFRAME
RDFRAME
IPB_RDCLK
IPB_TDCLK
IPB_OUT0/PLLENN
IPB_OUT1/ZCLKSEL
IPB_IN0
IPB_IN1
USBREFAVDD
SCLK
LINKON
LREQ
LPS
GPIO21/EESK
GPIO22/EEDI
GPIO23/EEDO
GPIO24/EECS
OSC12MHI
OSC12MHO
VCC3SBY
VCC1_8SBY
VCC1_8
VCC3
VCCP
IVDD_AUX
CP39
CP37
CP28
CP27
CE5
CB109
1u-0805
X_10u-0805
X_COPPER
X_80
X_4.7K
RN59
RN65
R232
412RST
R276
R277
R278
R279
R217
4.7K
R243
10M
Y2
12M
C244
15p
C268
10p
L42
80
L43
X_80_0603
CB128
CB129
X_1u
0.1u
C225
C234
CT22
10u-0805
CB1
1u
CB136
CT20
CB119
CB121
CB107
X_0.1u
CB123
CB122
CB126
CB108
CT21
CT23
CB139
CB134
CB135
CB144
CB133
CB137
CB140
L36
L35
C209
C203
SamSung Electronics
Title
SIS963-3/4 USB & Power
Size
Document Number
Euclid2 (MS-6782)
Rev
10A
Custom
Date: Wednesday, October 29, 2003
Sheet 17 of 30

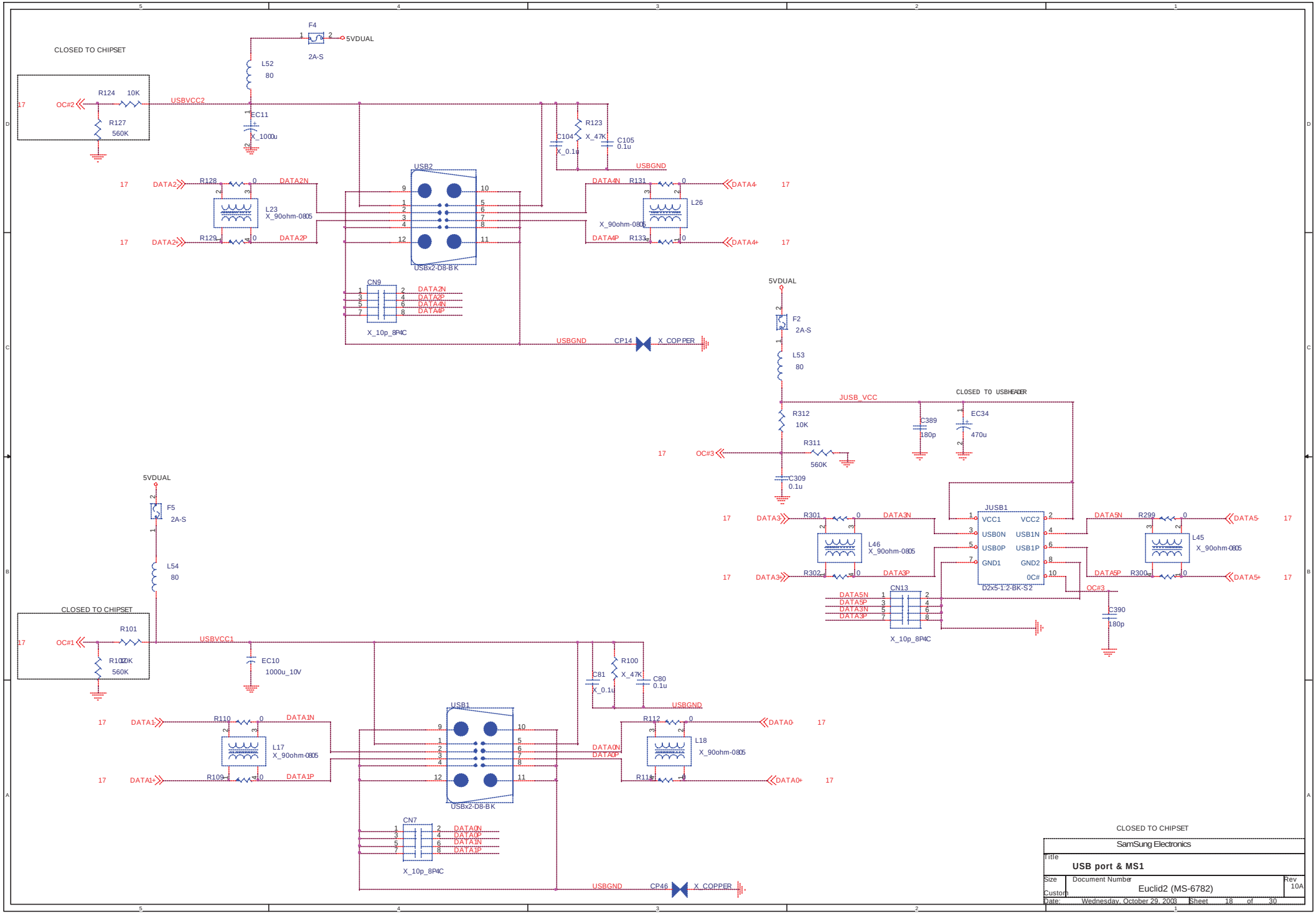
CLOSED TO CHIPSET
F4
2A-S
5VDUAL
L52
80
R124
10K
OC#2
USBVCC2
R127
560K
EC11
X_1000u
R123
X_47K
C104
X_0.1u
C105
0.1u
USBGND
USB2
DATA2
R128
DATA2N
L23
X_90ohm-0805
R129
DATA2P
DATA4N
R131
DATA4-
L26
X_90ohm-0805
DATA4P
R133
DATA4+
USBx2-D8-BK
CN9
X_10p_8P4C
CP14
X_COPPER
5VDUAL
F2
2A-S
L53
80
JUSB_VCC
CLOSED TO USBHEADER
R312
10K
C389
180p
EC34
470u
OC#3
R311
560K
C309
0.1u
JUSB1
VCC1
VCC2
USB0N
USB1N
USB0P
USB1P
GND1
GND2
OC#
D2x5-1.2-BK-S2
DATA3
R301
DATA3N
L46
X_90ohm-0805
R302
DATA3P
DATA5N
R299
DATA5-
L45
X_90ohm-0805
DATA5P
R300
DATA5+
CN13
X_10p_8P4C
C390
180p
5VDUAL
F5
2A-S
L54
80
CLOSED TO CHIPSET
R101
OC#1
USBVCC1
R102
560K
EC10
1000u_10V
C81
X_0.1u
R100
X_47K
C80
0.1u
USBGND
USB1
DATA1
R110
DATA1N
L17
X_90ohm-0805
R109
DATA1P
DATA0N
DATA0P
R112
DATA0-
L18
X_90ohm-0805
R111
DATA0+
USBx2-D8-BK
CN7
X_10p_8P4C
CP46
X_COPPER
CLOSED TO CHIPSET
SamSung Electronics
Title
USB port & MS1
Size
Custom
Document Number
Euclid2 (MS-6782)
Rev
10A
Date: Wednesday, October 29, 2003
Sheet 18 of 30

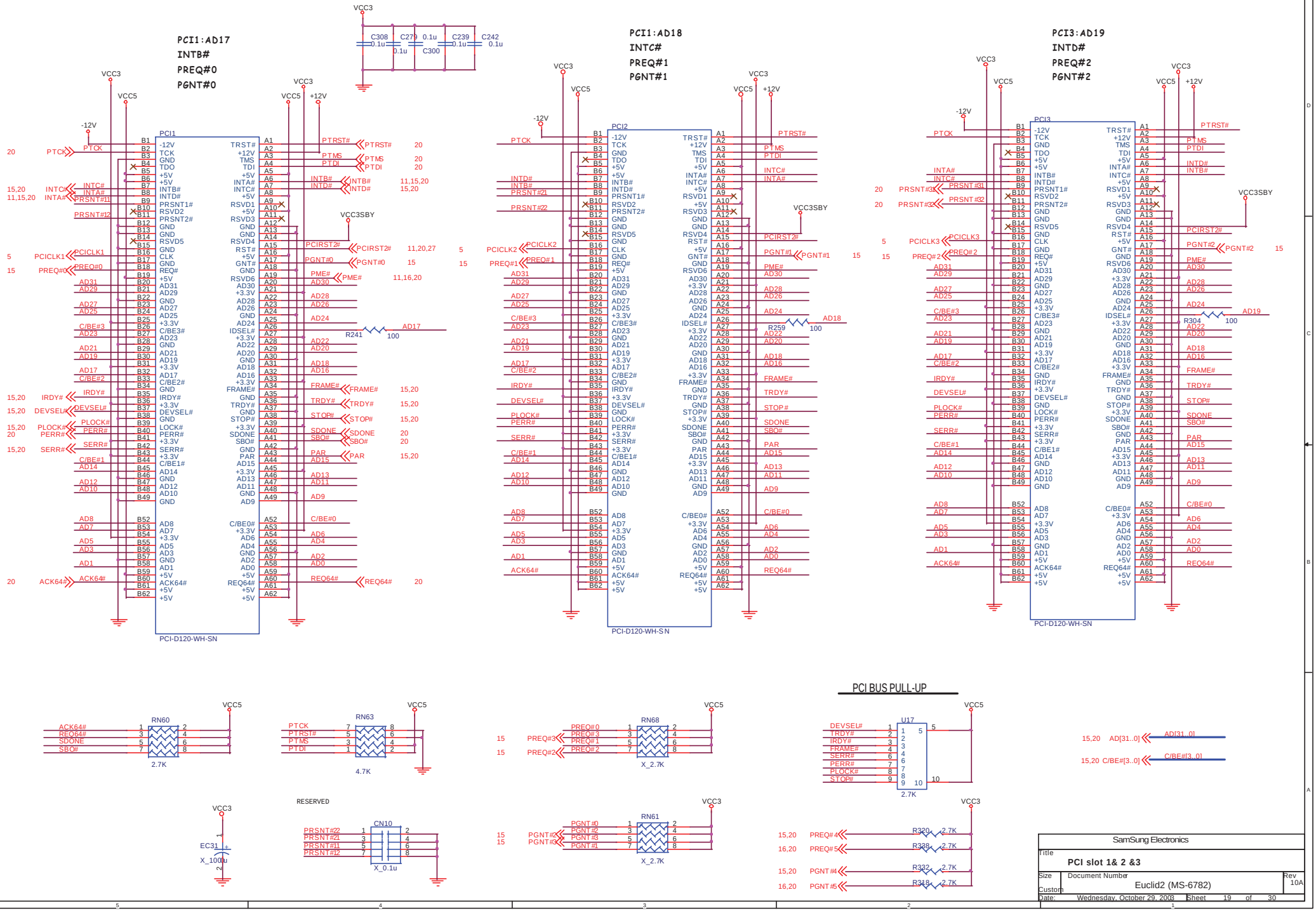
PCI1:AD17
INTB#
PREQ#0
PGNT#0
PCI1
PCI-D120-WH-SN
PCI1:AD18
INTC#
PREQ#1
PGNT#1
PCI2
PCI-D120-WH-SN
PCI3:AD19
INTD#
PREQ#2
PGNT#2
PCI3
PCI-D120-WH-SN
VCC3
VCC5
+12V
-12V
VCC3SBY
C308 0.1u
C279 0.1u
C300 0.1u
C239 0.1u
C242 0.1u
R241 100
R259 100
R304 100
PCI BUS PULL-UP
RN60 2.7K
RN63 4.7K
RN68 X_2.7K
U17 2.7K
RESERVED
CN10 X_0.1u
EC31 X_100u
RN61 X_2.7K
R320 2.7K
R338 2.7K
R322 2.7K
R318 2.7K
AD[31..0]
C/BE#[3..0]
SamSung Electronics
Title
PCI slot 1& 2 &3
Size
Custom
Document Number
Euclid2 (MS-6782)
Rev
10A
Date: Wednesday, October 29, 2003
Sheet 19 of 30

PCI4:AD20
INTA#
PREQ#4(share with MS1REQ#)
PGNT#4(share with MS1GNT#)

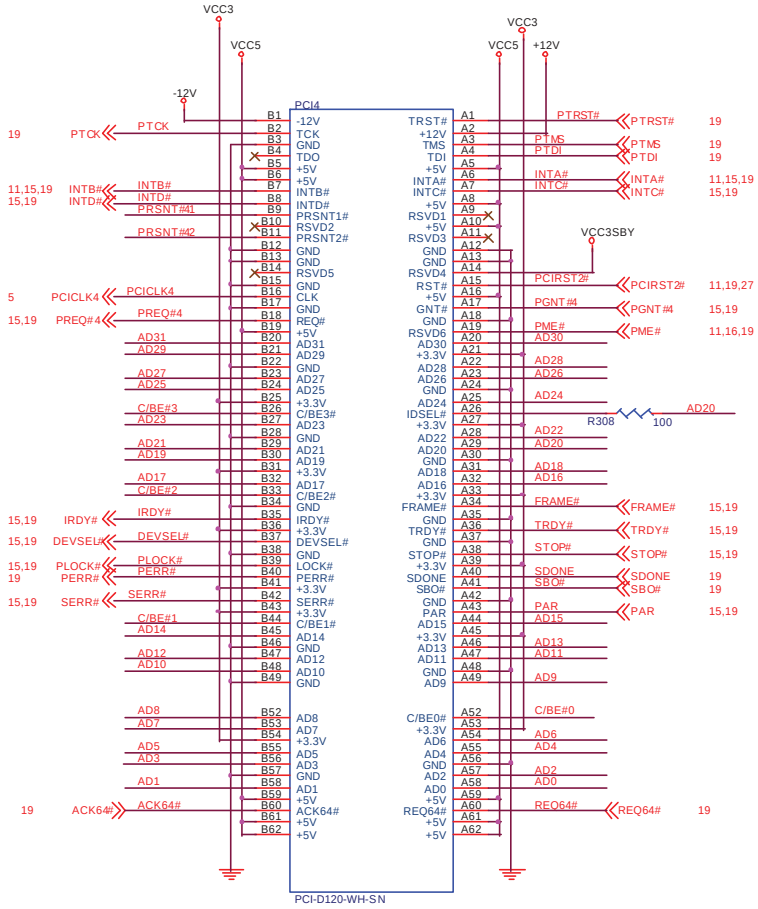

PCI5:AD21
INTB#
PREQ#5(share with LANREG#)
PGNT#5(share with LANGNT#)

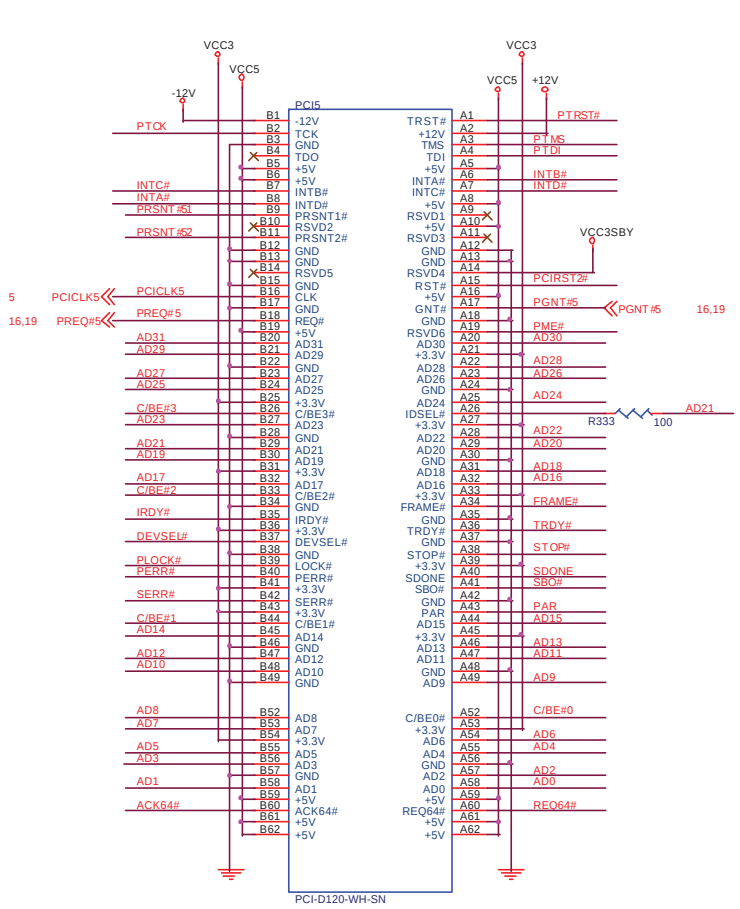

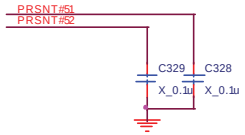

SamSung Electronics	
Title	PCI slot 4 & 5
Size / Document Number	Euclid2 (MS-6782)
Rev	10A
Custom	
Date: Wednesday, October 29, 2003	Sheet 20 of 30

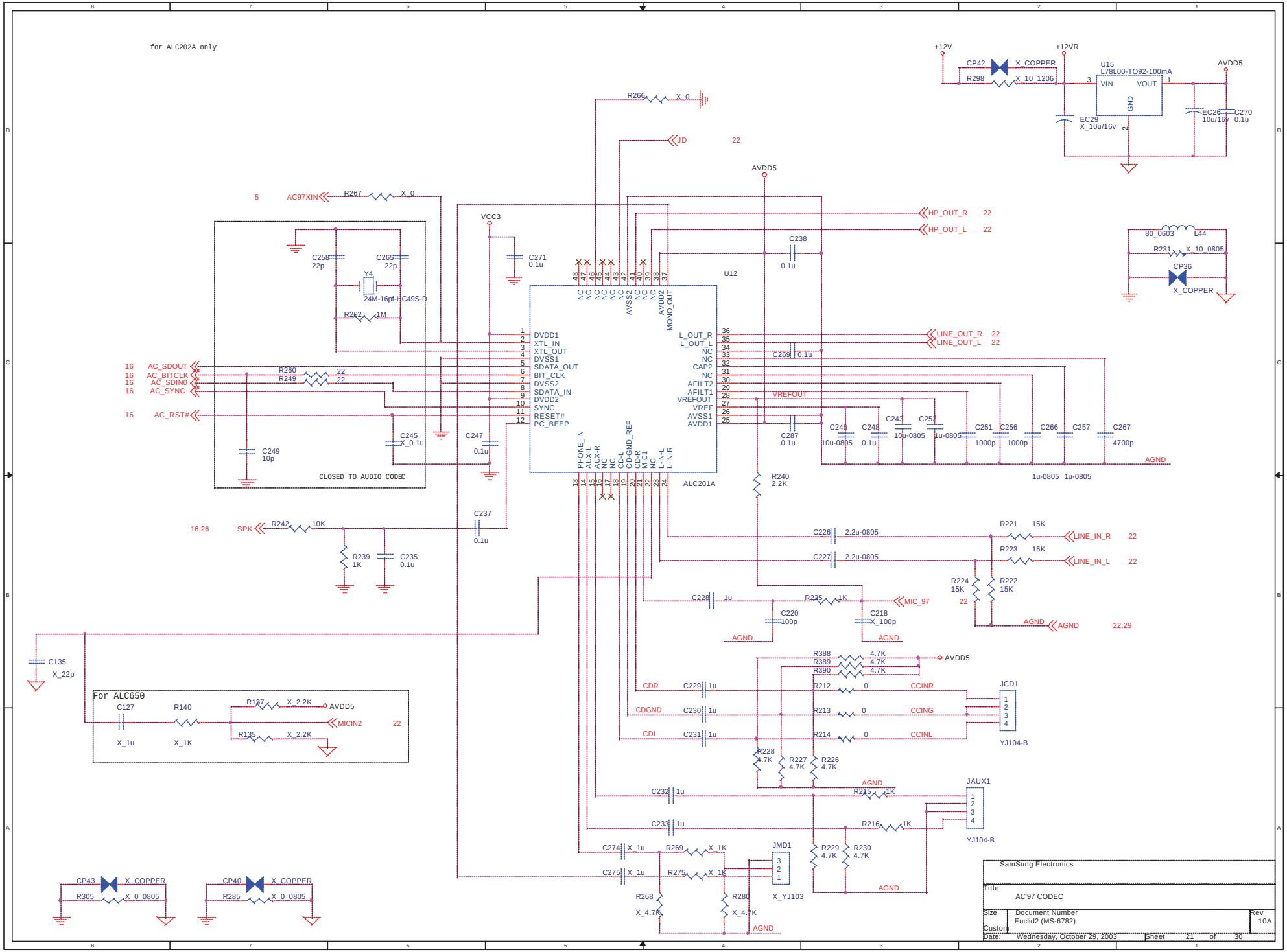
for ALC202A only
+12V
+12VR
CP42
X_COPPER
R298
X_10_1206
U15
L78L00-TO92-100mA
VIN
VOUT
GND
AVDD5
EC29
X_10u/16v
EC26
10u/16v
C270
0.1u
R266
X_0
JD
22
AC97XIN
R267
X_0
VCC3
C271
0.1u
C258
22p
C265
22p
Y4
24M-16pf-HC49S-D
R262
1M
U12
ALC201A
DVDD1
XTL_IN
XTL_OUT
DVSS1
SDATA_OUT
BIT_CLK
DVSS2
SDATA_IN
DVDD2
SYNC
RESET#
PC_BEEP
L_OUT_R
L_OUT_L
CAP2
AFILT2
AFILT1
VREFOUT
VREF
AVSS1
AVDD1
HP_OUT_R
HP_OUT_L
LINE_OUT_R
LINE_OUT_L
C238
0.1u
C269
0.1u
80_0603
L44
R231
X_10_0805
CP36
X_COPPER
AC_SDOUT
AC_BITCLK
AC_SDIN0
AC_SYNC
AC_RST#
R260
R249
C245
X_0.1u
C249
10p
CLOSED TO AUDIO CODEC
C247
0.1u
C287
0.1u
C246
10u-0805
C248
0.1u
C243
10u-0805
C252
1u-0805
C251
1000p
C256
1000p
C266
1u-0805
C257
1u-0805
C267
4700p
AGND
R240
2.2K
SPK
R242
10K
R239
1K
C235
0.1u
C237
0.1u
C226
2.2u-0805
C227
2.2u-0805
R221
15K
R223
15K
LINE_IN_R
LINE_IN_L
R224
15K
R222
15K
C228
1u
R225
1K
MIC_97
C220
100p
C218
X_100p
C135
X_22p
For ALC650
C127
X_1u
R140
X_1K
R127
X_2.2K
R135
X_2.2K
MICIN2
R388
R389
R390
4.7K
CDR
CDGND
CDL
C229
1u
C230
1u
C231
1u
R212
R213
R214
CCINR
CCING
CCINL
JCD1
YJ104-B
R228
4.7K
R227
4.7K
R226
4.7K
C232
1u
C233
1u
R215
1K
R216
1K
JAUX1
YJ104-B
C274
X_1u
C275
X_1u
R269
X_1K
R275
X_1K
JMD1
X_YJ103
R229
4.7K
R230
4.7K
R268
X_4.7K
R280
X_4.7K
CP43
X_COPPER
R305
X_0_0805
CP40
X_COPPER
R285
X_0_0805
SamSung Electronics
Title
AC'97 CODEC
Size
Document Number
Euclid2 (MS-6782)
Rev
10A
Custom
Date:
Wednesday, October 29, 2003
Sheet
21
of
30

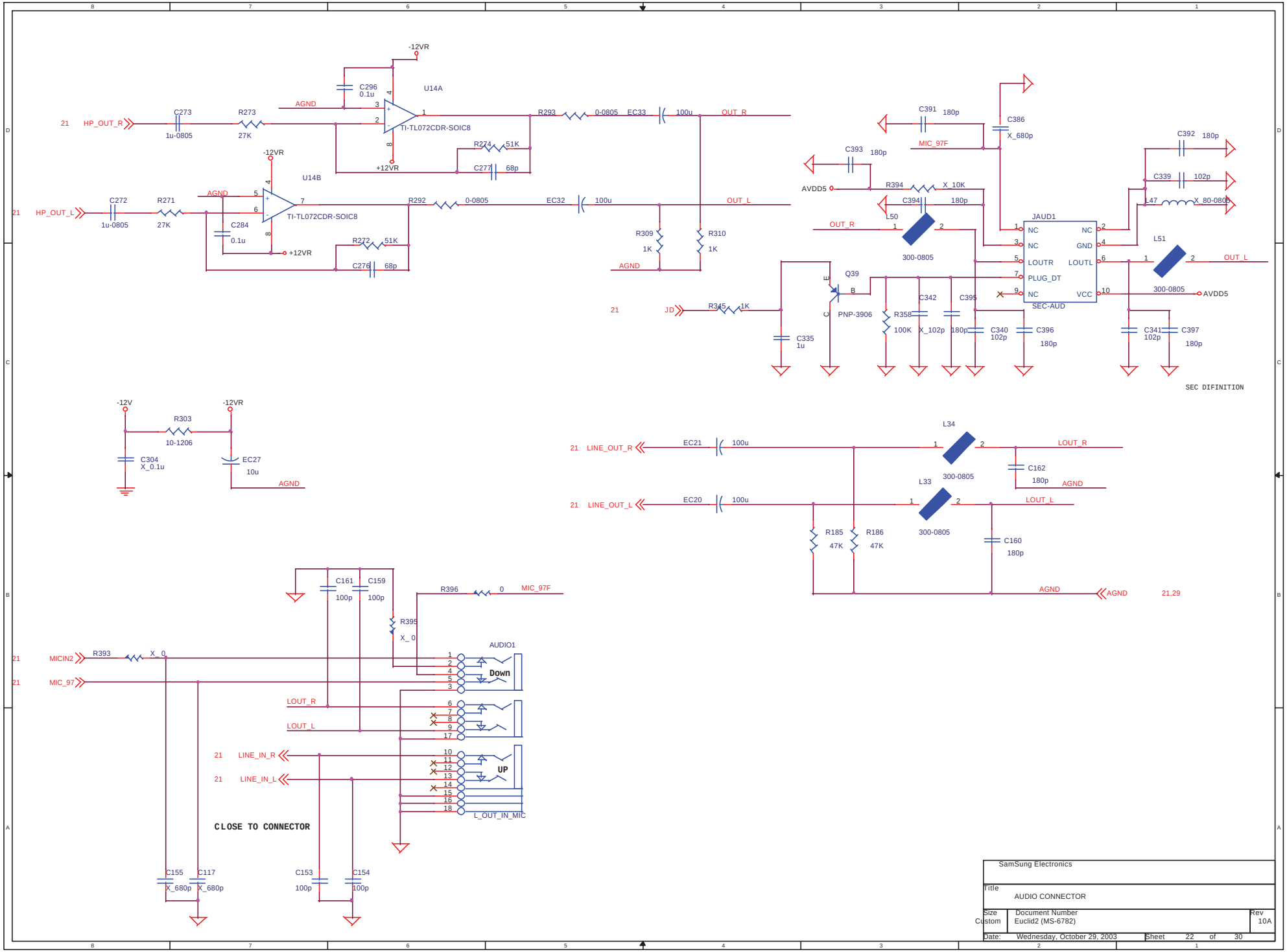

SamSung Electronics

Title: AUDIO CONNECTOR

Size: Custom | Document Number: Euclid2 (MS-6782) | Rev: 10A

Date: Wednesday, October 29, 2003 | Sheet 22 of 30

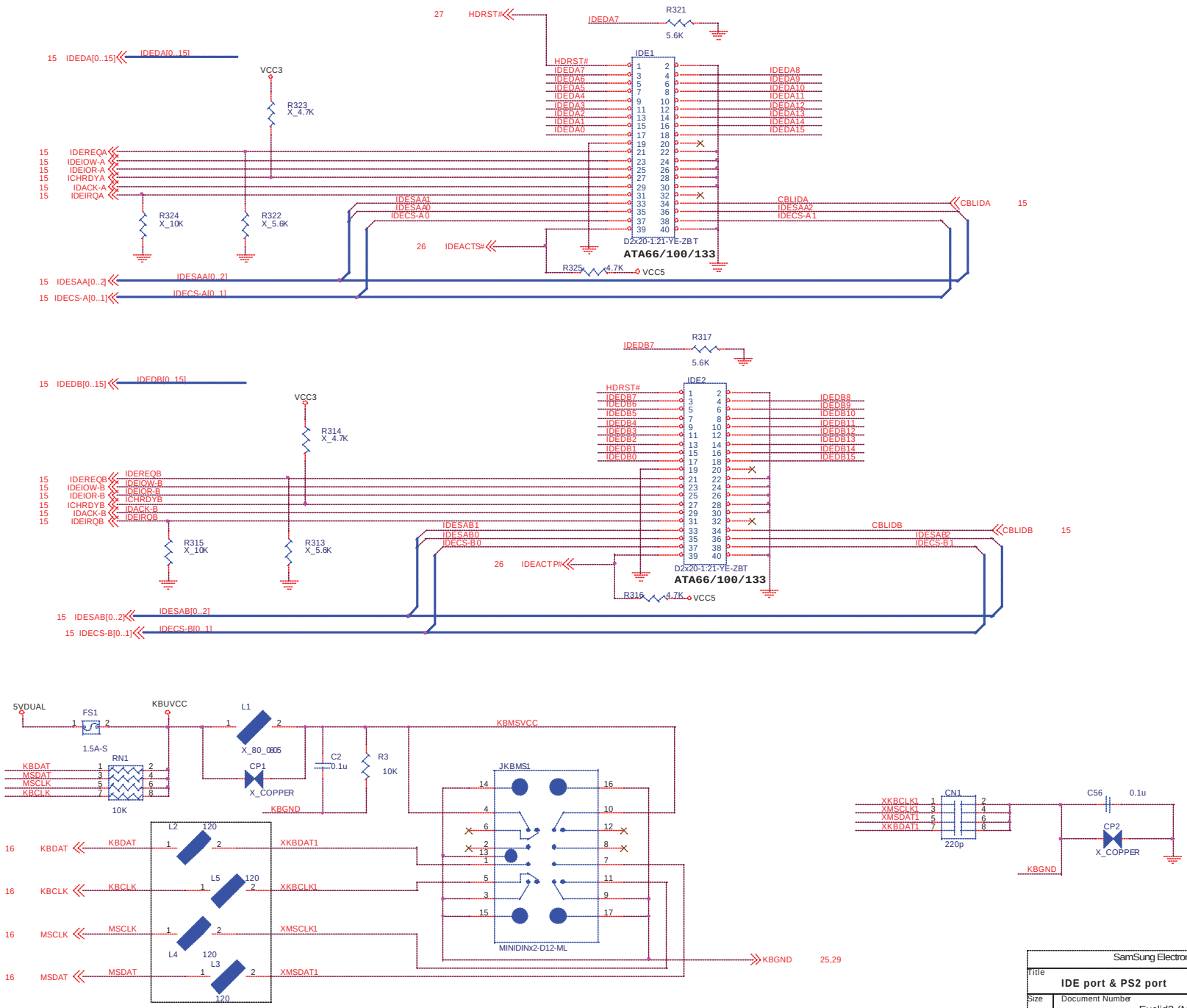
IDE1
D2x20-1.21-YE-ZBT
ATA66/100/133
IDE2
D2x20-1.21-YE-ZBT
ATA66/100/133
MINIDINx2-D12-ML
JKBMS1
CN1
220p
5VDUAL
KBUVCC
KBMSVCC
KBGND
VCC3
VCC5
HDRST#
IDEDA7
IDEDB7
IDEACTS#
IDEACTP#
CBLIDA
CBLIDB
IDEDA[0..15]
IDEDB[0..15]
IDESAA[0..2]
IDESAB[0..2]
IDECS-A[0..1]
IDECS-B[0..1]
IDEREQA
IDEIOW-A
IDEIOR-A
ICHRDYA
IDACK-A
IDEIRQA
IDEREQB
IDEIOW-B
IDEIOR-B
ICHRDYB
IDACK-B
IDEIRQB
KBDAT
MSDAT
MSCLK
KBCLK
XKBCLK1
XMSCLK1
XMSDAT1
XKBDAT1
XKBDAT1
XKBCLK1
XMSCLK1
XMSDAT1
R321 5.6K
R317 5.6K
R323 X_4.7K
R324 X_10K
R322 X_5.6K
R325 4.7K
R314 X_4.7K
R315 X_10K
R313 X_5.6K
R316 4.7K
FS1 1.5A-S
RN1 10K
L1 X_80_0805
CP1 X_COPPER
C2 0.1u
R3 10K
L2 120
L5 120
L4 120
L3 120
C56 0.1u
CP2 X_COPPER
SamSung Electronics
Title
IDE port & PS2 port
Size
Custom
Document Number
Euclid2 (MS-6782)
Rev
10A
Date: Wednesday, October 29, 2003
Sheet 23 of 30

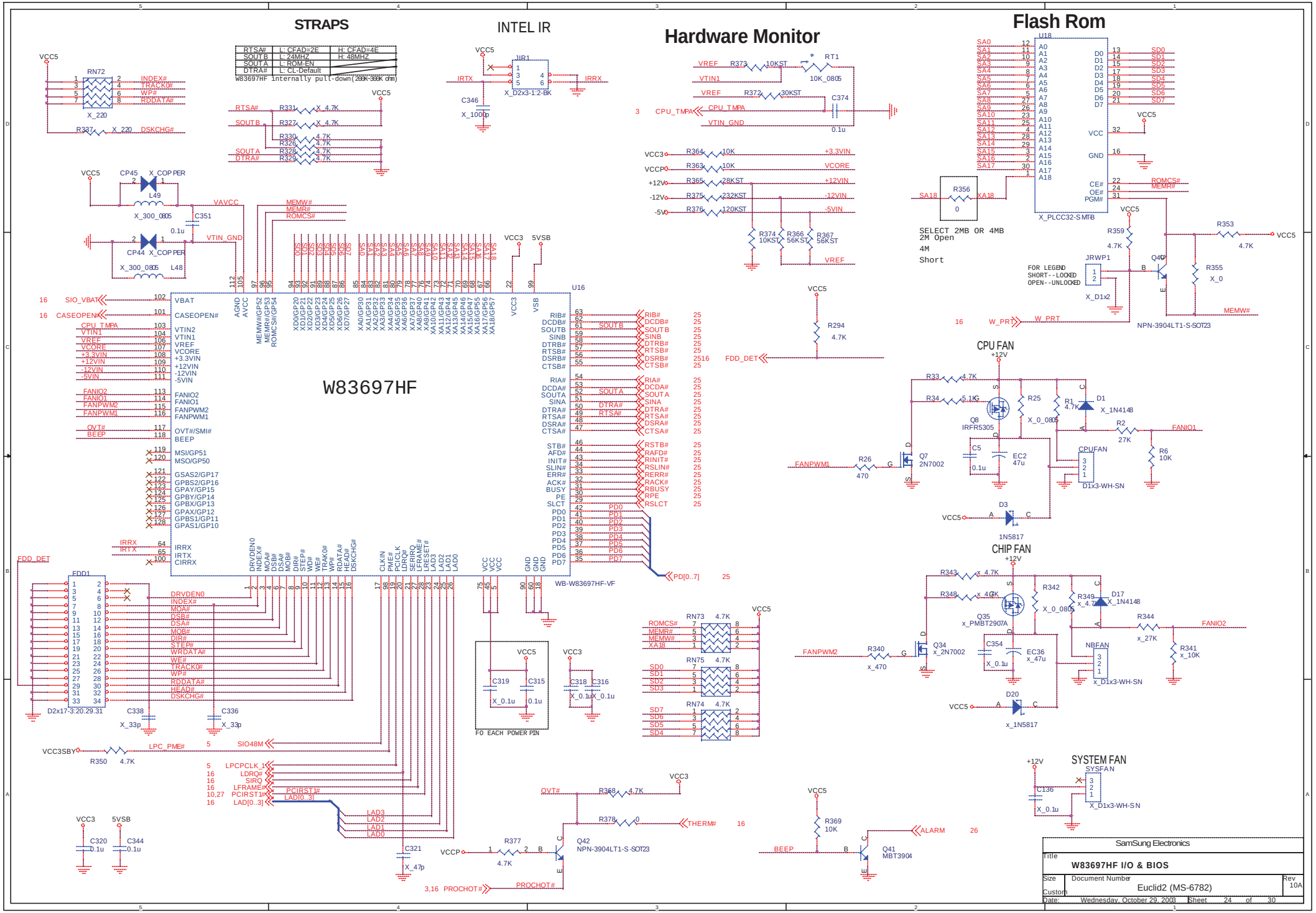
STRAPS
INTEL IR
Hardware Monitor
Flash Rom
W83697HF
CPU FAN
CHIP FAN
SYSTEM FAN
SamSung Electronics
W83697HF I/O & BIOS
Euclid2 (MS-6782)
Wednesday, October 29, 2003
Sheet 24 of 30

Parallel Port

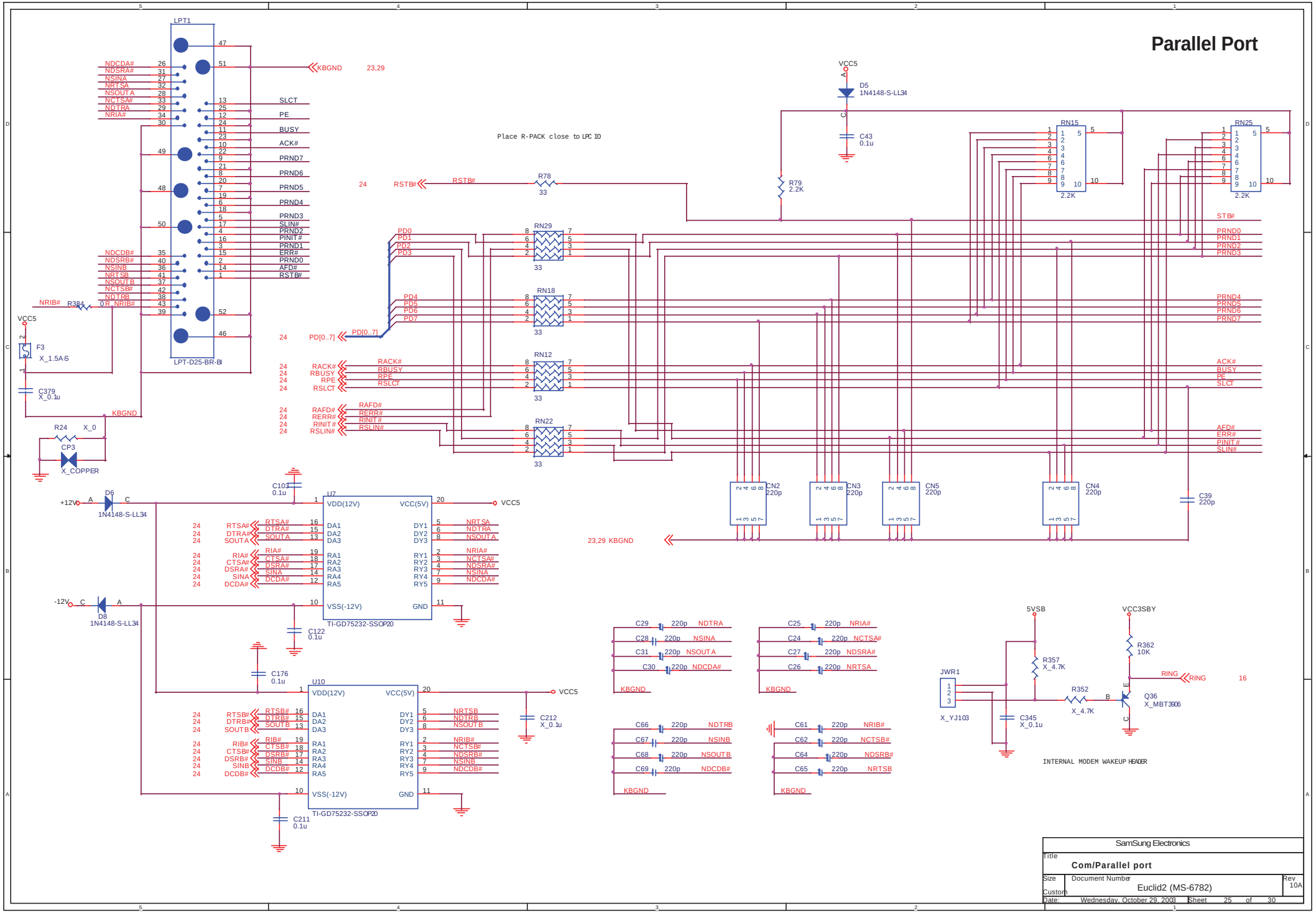

SamSung Electronics	
Title	Com/Parallel port
Size: Custom	Document Number: Euclid2 (MS-6782) — Rev: 10A
Date: Wednesday, October 29, 2003	Sheet 25 of 30

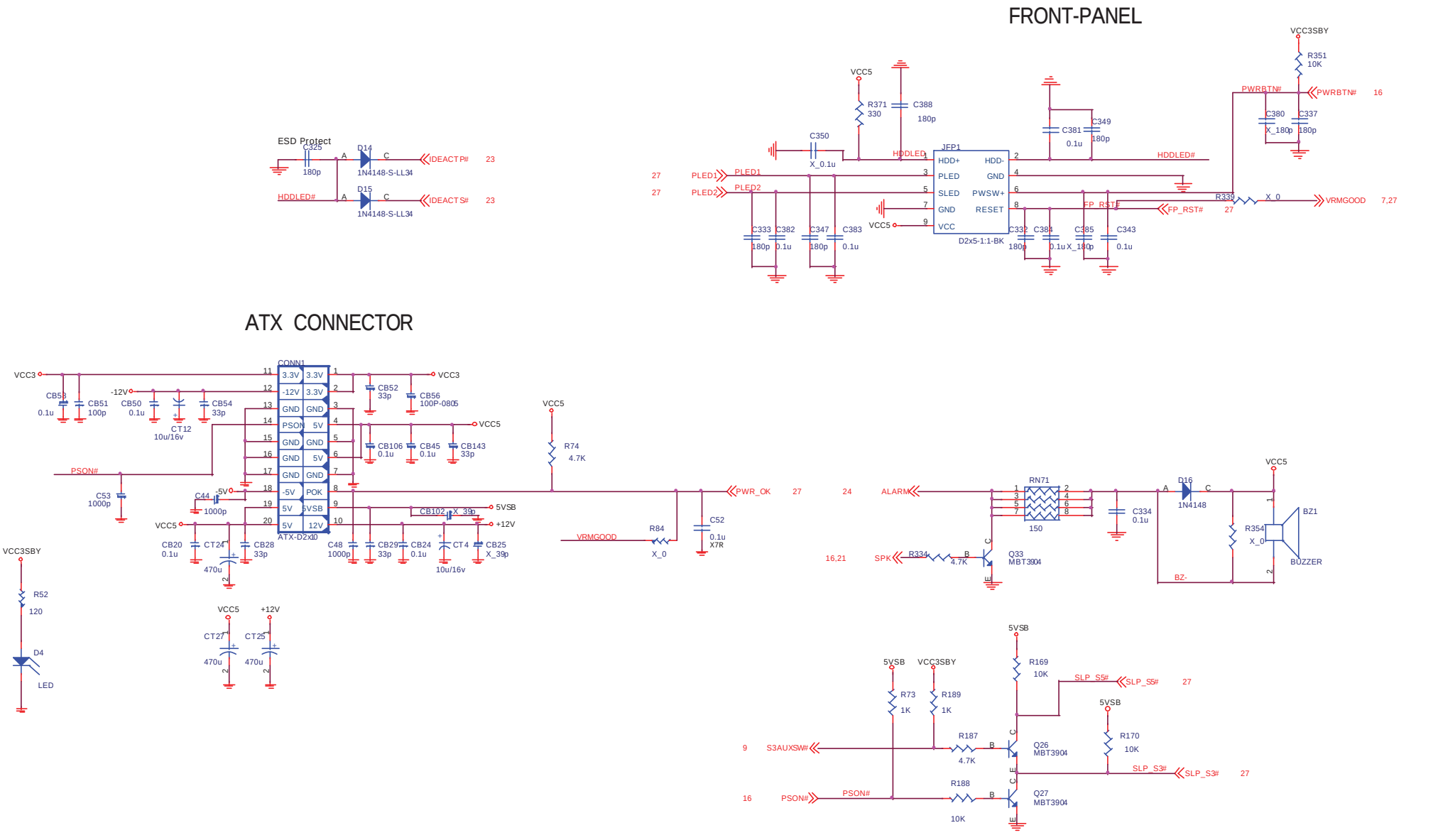

	S0	S3	S5
S3AUXSW#	1	0	1
PSON#	0	1	1
SLP_S5#	1	1	0
SLP_S3#	1	0	0

SamSung Electronics

Title: ATX & F-panel & Audio port

Size: Custom | Document Number: Euclid2 (MS-6782) | Rev: 10A

Date: Wednesday, October 29, 2003 | Sheet 26 of 30

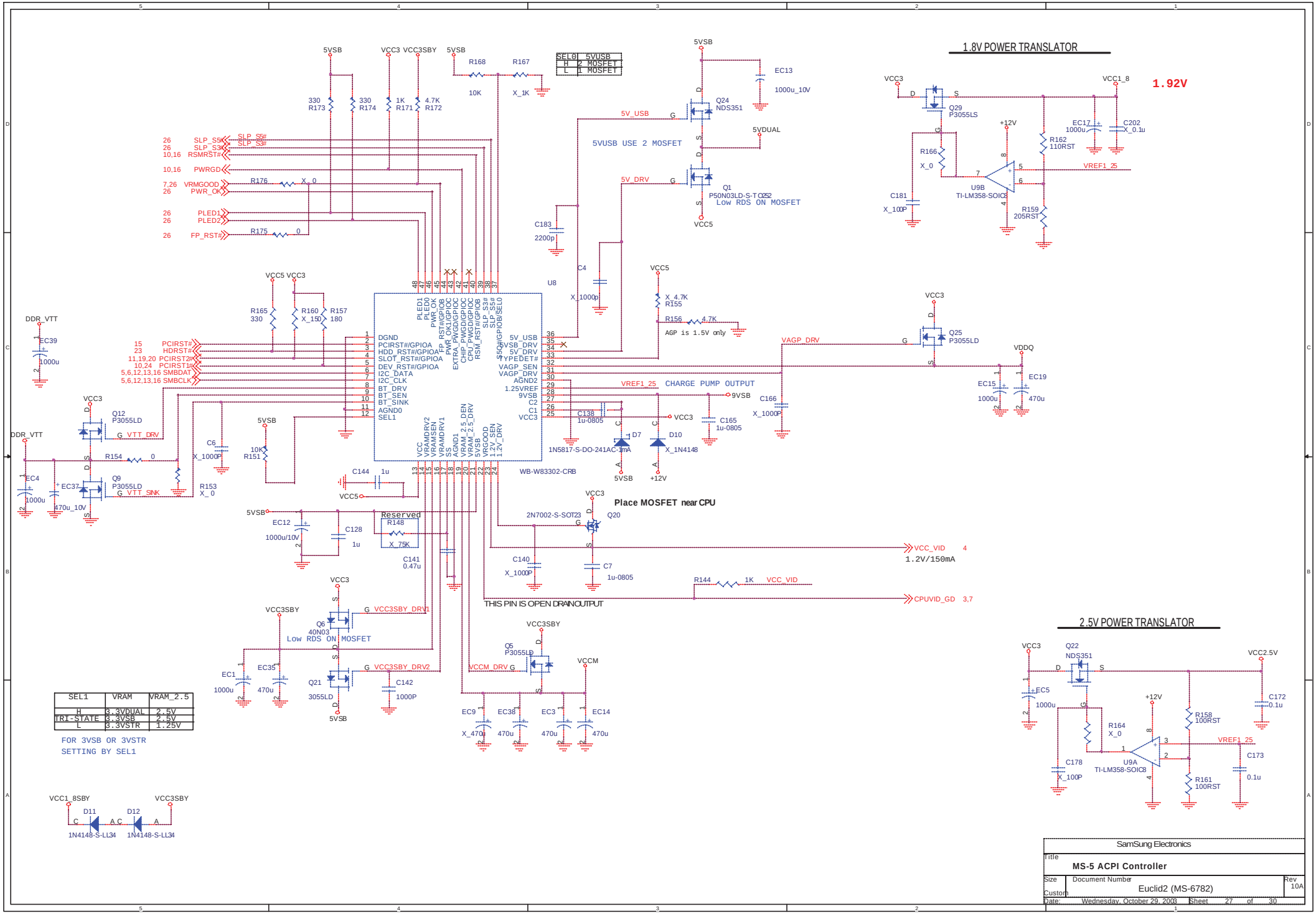
1.8V POWER TRANSLATOR
1.92V
2.5V POWER TRANSLATOR
5VUSB USE 2 MOSFET
Low RDS ON MOSFET
CHARGE PUMP OUTPUT
AGP is 1.5V only
Place MOSFET near CPU
1.2V/150mA
THIS PIN IS OPEN DRAINOUTPUT
Reserved
WB-W83302-CRB
U8
U9B
TI-LM358-SOIC8
U9A
TI-LM358-SOIC8
SEL0 5VUSB
H 2 MOSFET
L 1 MOSFET
SEL1 VRAM VRAM_2.5
H 3.3VDUAL 2.5V
TRI-STATE 3.3VSB 2.5V
L 3.3VSTR 1.25V
FOR 3VSB OR 3VSTR
SETTING BY SEL1
SamSung Electronics
Title
MS-5 ACPI Controller
Size
Document Number
Euclid2 (MS-6782)
Rev
10A
Custom
Date: Wednesday, October 29, 2003
Sheet 27 of 30

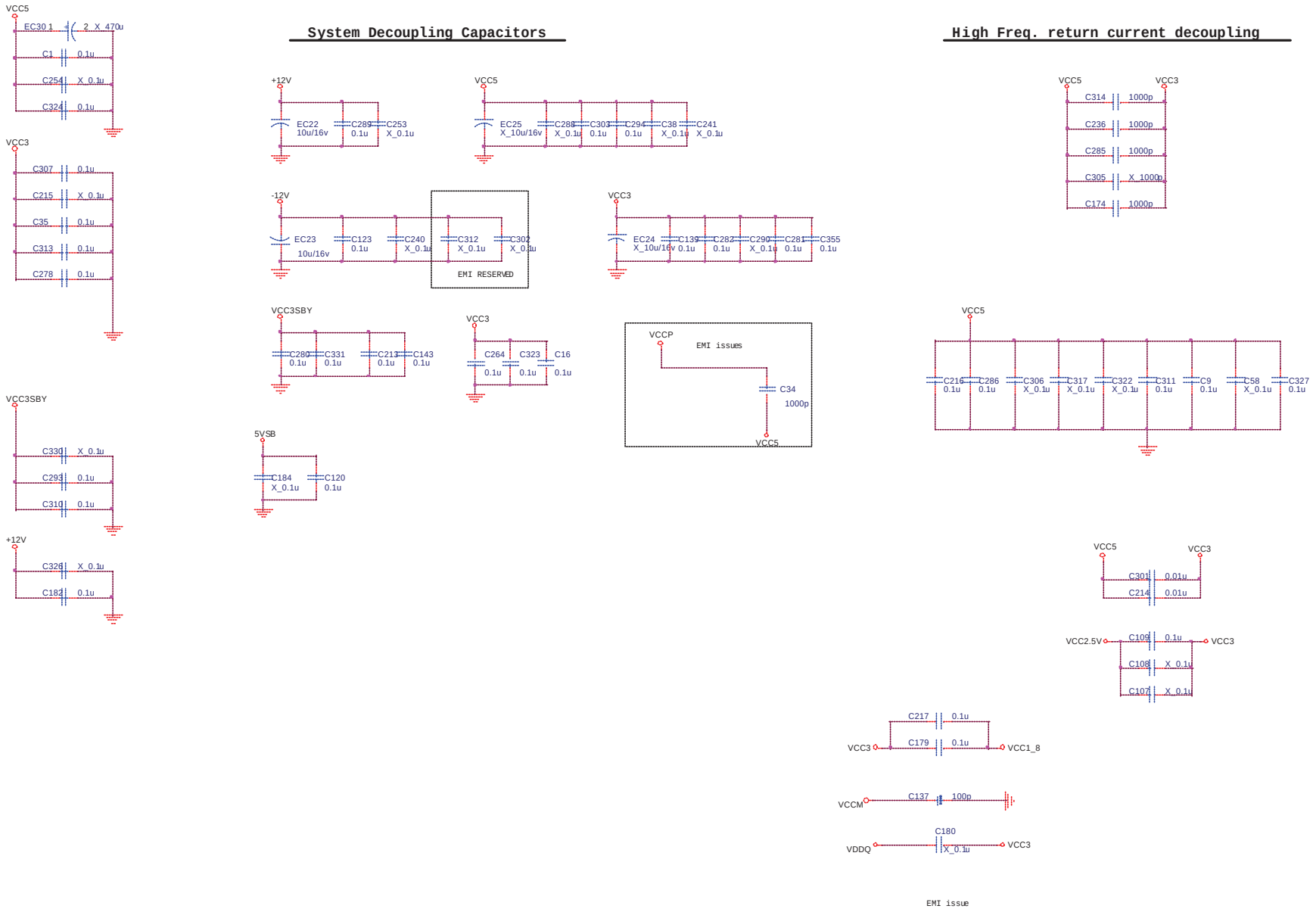

SamSung Electronics		
Title: Decoupling Capacitor		
Size: Custom	Document Number: Euclid2 (MS-6782)	Rev: 10A
Date: Wednesday, October 29, 2003	Sheet 28 of 30	

PCB OTHER COMPONENT

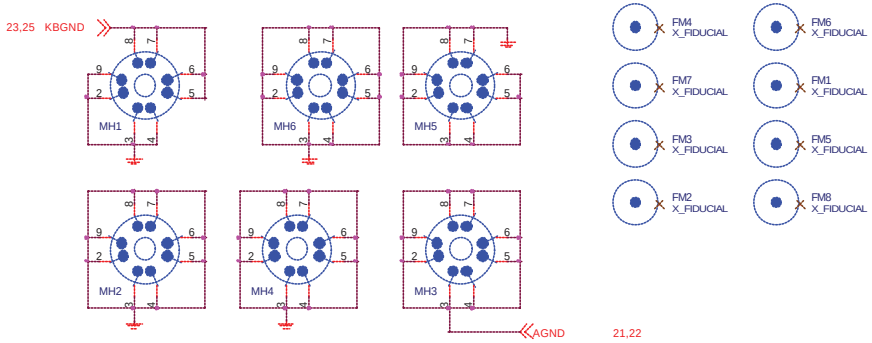

FIDUCIALS

FOR TEST

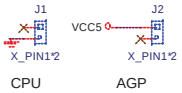

MANUAL PART

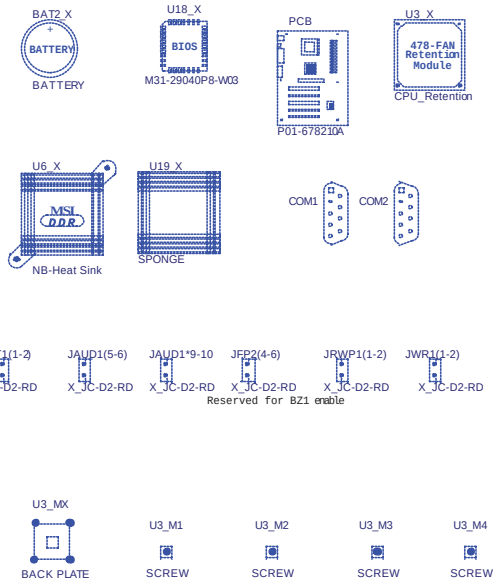

OPTION PART

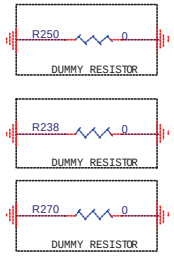

GPIO SPEC. & PCI ROUTING

SB(SIS963) GPIO

GPIO	PIN	Function Description
GPIO0	V2	Unused (multifunction pin)
GPIO1	T8	Unused (multifunction pin)
GPIO2	T4	Thermal detect from H/M OVT#(83697HF)
GPIO3	T6	W_PRT(WRITE:HIGH / PROTECT:LOW)
GPIO4	W1	FDD_DET
GPIO5	U5	PCIREQ#5
GPIO6	U4	PCIGNT#5
GPIO7	C4	Unused (multifunction pin)
GPIO8	C14	Wake on RING event (Active Low)
GPIO9	E6	Unused (multifunction pin)
GPIO10	B3	Unused (multifunction pin)
GPIO11	F5	Unused (multifunction pin)
GPIO12	D4	Unused (multifunction pin)
GPIO13	B1	CLEAN CMOS (NORMAL:HI / ACTIVE:LOW)
GPIO14	E5	Unused (multifunction pin)
GPIO15	E13	Keyboard Data
GPIO16	A16	Keyboard Clock
GPIO17	D13	Mouse Data
GPIO18	B15	Mouse Clock
GPIO19	A1	Programming for "SMBCLK"
GPIO20	B2	Programming for "SMBDATA"

PCI Config.

DEVICE	INT Pin	IDSEL
PCI Slot 1 PREQ#0	INTB# INTC# INTD# INTA#	AD17
PCI Slot 2 PREQ#1	INTC# INTD# INTA# INTB#	AD18
PCI Slot 3 PREQ#2	INTD# INTA# INTB# INTC#	AD19
PCI Slot 4 PREQ#4*	INTA# INTB# INTC# INTD#	AD20
PCI Slot 5 PREQ#5	INTB# INTC# INTD# INTA#	AD21

SamSung Electronics

Title: **Manual Part & GPIO define**

Size: Custom | Document Number: Euclid2 (MS-6782) | Rev: 10A

Date: Wednesday, October 29, 2003 | Sheet 29 of 30

0B

1.VRM10 soluction from ST 2 phase to Intersirl 6556A 3 phase (page 7).
2.Customer request add USB connector (page 18).
3.Customer request change connector and remove game port (page 22).
4.Customer request mechanical's issue EC35,EC18,EC19 CAP 1000uf to 470uf.
5.Customer request mechanical's issue move JCD1,JAUX1.

0C

1.Add CP47 for VTIN_GND reduce noise (page 3).
2.Reserved R380 for boost external pull up (page 3).
3.ADD CN11 for improve PCICLK rise time (page 5).
4.C205 , C206 10P-->33P for AGPCLK rise timing (page 5).
5.ADD C375 , C376 , C377 ,C378 15P for CPUCLK 0/1 rise timing (page 5).
6.Change R28,R71,R97 0 ohm -->2.2ohm (page 7).
7.Update CPU boost sel circuit (page 7).
8.Update R47 470K-->NO STUFF and ADD R51-->301K for VRM offset (page 7).
9.Update R56 , R58 , R59 4.32K-->1.74K for VRM ocp (page 7) .
10.Update R27 2K-->3.3K , R17 20K-->28K , R31 15K-->30K (page 7) .
11.EC8 220u-->100u (page 7).
*DEL 12.Add C77 3p and change R103 22 ohm -->33 ohm for improve timing (page 6).
13.CT10 ,CT13 change to 1000u/10V, dip-2/8*16/3.5mm for mechanical's issue customer's request(page 7).
14.Add C114 ,C115, C118 , C119 , C124 , C145 , C148 for VCCM decoupling CB59 , CB63 for DDRPULL dcoupling (page 9).
15.Add C11 , C12 , C20 for DDR VREF douplng (page 12,13).
16.Add CB14,CB16,CB26,CB34,CB36,CB43,CB44,CB46,CB53,CB57 ,CB70 ,CB89,CB93,CB96 0.1u,CB64 10u for DDR VTT coupling (page 14).
17.Add F2 , F4 , F5 DIS, polyswitch/miniSMDC200, 2A/6V/0.07O, SMT/1812, It=4A, UL/CSA/TUV,CN13-->10P for EMI (page 18).
18.Modify JCD1, JAUX1 pin define and bom for customer's request (page 21).
19.Add R385 , R386 2.2K ,reserved R387 0 ohm for MIC2 option (page 22).
20.Add R3 to improve 5VDUAL discharge time(page 23).
21.Reserved C374 for coupling (page24).
22.Add R356 0 ohm to support 4M flash part (page 24).
24.Add EC37 for DDR_VTT power (page 27).
25.Reserved EC38 for DDR_VCC power (page 27).
26.Change Q1 3055LD to 50N03LD(DIS,mosfet/n-channel,P50N03LD,SMT/TO252,Rds(on)=12mO,Vgs(on)=1V,Id=50A,Ciss=1800pf,Qg=50nC,Vds=27V,Vgs=±20V) for USB's voltage drop customer's requirement (page 27).
27.Update SIO version.
28.ADD L50 , L51 for EMI (page 22).
29.Add C380 , C381 , C382 , C383 , C384 , C385 for ESD (page 22).
30.Add CN1 220p for EMI (page 23).
31EC10 , EC13 1000u-6.3V -->1000u-10V customer,s requirement (page 18 , 27).
32.DDR COM_P 40.2 ohm--> 22 ohm , DDR COM_N 40.2 ohm -->28 ohm for DDR margine(page 9).
33.Add R395 0 ohm reserve R396 0 ohm R394 10K , C386 for support front MIC2(page 22).
34.Reserve OSC circuit (page 16).
35.R159 215 ohm --> 205 ohm , chip's vocre voltage up to 1.92V(page 16).
36.Add CB 8 , 14 , 53 , 96 for VTT decoupling(page 14).
37.THERMDC short to GND avoide noise (page 3).
38.Reserve EC9 470uF (page 27).
39.Add CB 10 , 19 , 41 , 48 , 74 , 78 , 87 , 88 for VCCM decoupling (page 13).
40.R271,R273-->27K , R272,R274-->51K , R292,R293-->0 ohm for audio quality(page 22).
41.EC3 1000uf-->470uf(page 27).
42.Add CB71,84 220p for EMI(page 6).
43.Add CT24 470uf for Vcc5(page 26).
44.Add CB51 , CB56 , C137 100P for EMI (page 26).
45.Add R377 , Q42 for THERM# function (page 24).
46.Change NB heatsink
47.Add R47-->470K , R27 3.3K change to 3.09K for VRM load line (page 7).

100

1.Change CE2 CAP to CAP,MLCC,10u/10V/Y5V,1206,80/-20% customer's request (page 6).
2.Reserved CT16 for customer's request (page 7).
3.Reserved R397 R,resistor,1Kohm/5%/1/4W,1206 customer's request (page 7).
4.RN4 , R55 , R57 1K-->4.7K (page 7).
5.R33,R34,R343,R348change to R resistor,4.7Kohm/5%/1/10W,0603 customer's request (page 24).
6.Change Q8 MOS to DIS,mosfet/P-channel,IRFR5305,SMT/TO-252,Rds(on)=0.065O,Vgs(on)=2V,Id=31A,Ciss=1200p,Qg=63nC,Vds=31V,Vgs=±20V (page 24).
7.Reserved EC39 1000u DDR_VTT for customer's request (page 27).
8.Reserved CT27 for VCC5 customer's request (page 26).
9.Add L52,53,54 for customer's request (page 18).
10.Add C389 , C390 for ESD (page 18).
11.Add C388 for ESD (page 26).
12.Add C391 , C392 , C393 , C395 , C396 , C397 for ESD (page 22).
13.L47 no stuff for ESD (page 22).
14.C380 , C385 no stuff for ESD (page 26).
15.Add CT22 10u_0805 for 3VSB (page 17).
16.Add CT25 470u_16V for VCC12 (page 26).
17.CN7 , 9 , 13 remove improve for USB timing (page 18).
18.Remove CB 12 ,14 (page 18).
19.Remove R340 , R341 , R343 , RR344 , R348 , R349 , C354 , EC36 Q34 , Q35 , D20 , NBFAN FOR REMOVE SYSTEM FAN FUNCTION. (page 24).
20.Remove U18 flash part socket (page24).

100 to MP

1.Change R8,R397 to 1Kohm/5%/1/4W---customer's request (page 7).
2.Add CT16 1500u/6.3V for +12VP_FET---customer's request (page 7).
3.Add CT17 2200u/6.3V for VCCP---customer's request (page 7).
4.Change R34 from 4.7Kohm to 5.1Kohm for customer's request (page 24).

0825

1.R28,R71,R97 from 2.2ohm to 0ohm (page7).
2.R7,R16,R96 from 2ohm to 10ohm (page7).
3.R27 form 3.09K to 3.01K (page7).
4.R47 form 470K to 182K (page7).
5.Q13,16,19 change 09N03 to 066880B (page7).
6.Add CB23,27,33 10u (page4).

100-->10A

1.page #29:modify PCB version to 6782-10A for signal to NPTH spacing 15 mil from SEC request@2003/10/29

SamSung Electronics		
Title: Revision History		
Size: Custom	Document Number: Euclid2 (MS-6782)	Rev: 10A
Date: Wednesday, October 29, 2003	Sheet 30 of 30	