MS-6717 V.100

CPU: AMD Socket-462 Processor
Chipset: SIS 746
SIS 963 SOUTH BRIDGE
LPC I/O: W83697HF
AC'97 CODEC:Realtek ALC650
Expansion: PCI Slot * 5

MSI Power On / Suspend LED State

BIOS	S0	S1/S3	S5
Single Color	Green	Off	Off
Dual Color	Green	Red	Off

Green: MSI_LED1=' 1' MSI_LED2=' 0'
Red : MSI_LED1=' 0' MSI_LED2=' 1'
Single Color S1/S3 status:
MSI_LED1=' 0' MSI_LED2=' 1'

MSI ACPILED & VDIM state

BIOS	S0	S1/S3	S5
Single Color	ACPILED:Low VDIM :Hi	ACPILED:Hi & VDIM:Hi	ACPILED:Hi-z VDIM :Low
Dual Color	ACPILED:Low VDIM :Hi	ACPILED:Hi & VDIM:Hi	ACPILED:Hi-z VDIM :Low

Note :
1). 1Hz means Blinking frequence of ACPILED signal.
2). VDIM is no voltage in S5 state.

CONTENT	PAGE
Cover Page	1
Block Diagram	2
Clock Gen.& Clock Buffer	3-4
AMD Socket A	5-6
SiS 746 Host / AGP	7
SiS 746 Memory	8
746 MuTiol/Other	9
746 POWER	10
SIS 963	11-14
DDR SLOT 1-3	15-16
DDR Termination	17
AGP Slot	18
PCI slot 1~6	19-21
LAN PHY(RTL8201) & RJ45	22
IDE Connector	23
USB connector	24
KB/MS Connector	25
AC'97 CODEC	26
Audio Connector	27
LPC I/O W83697HF	28
Flash & FAN & H/WMonitor	29
Parallel Port	30
Serial Port	31
PWM ST6911D	32
ACPI Contorller	33
Front Panel&ATX power CONN.	34
SCREW MENU	35

MS-6717 Block Diagram

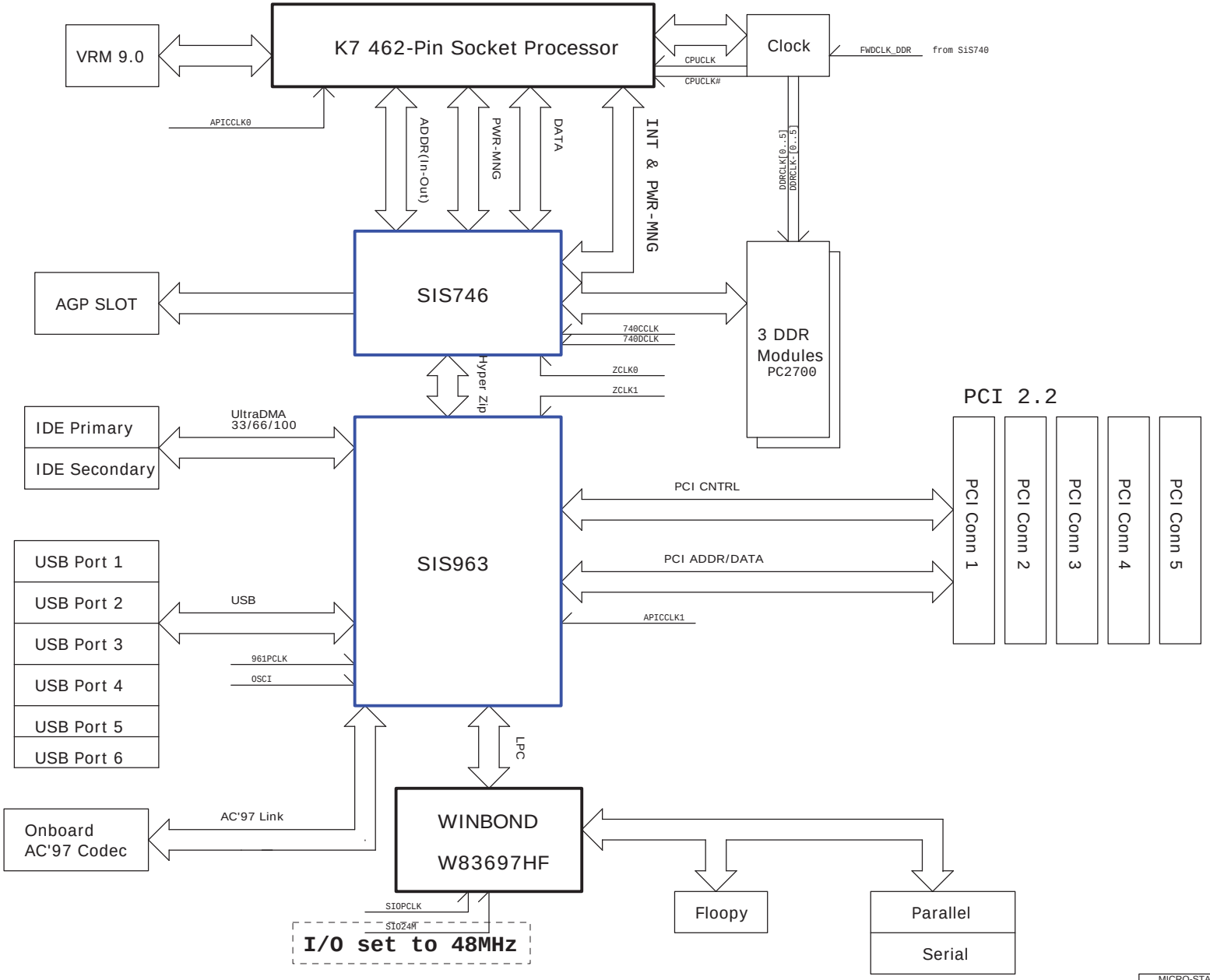

MICRO-STAR INT'L CO.,LTD.			
Title: BLOCK DIAGRAM			
Size: Custom	Document Number: MS-6717		Rev: 0B
Date: Wednesday, November 06, 2002	Sheet 2 of 36		

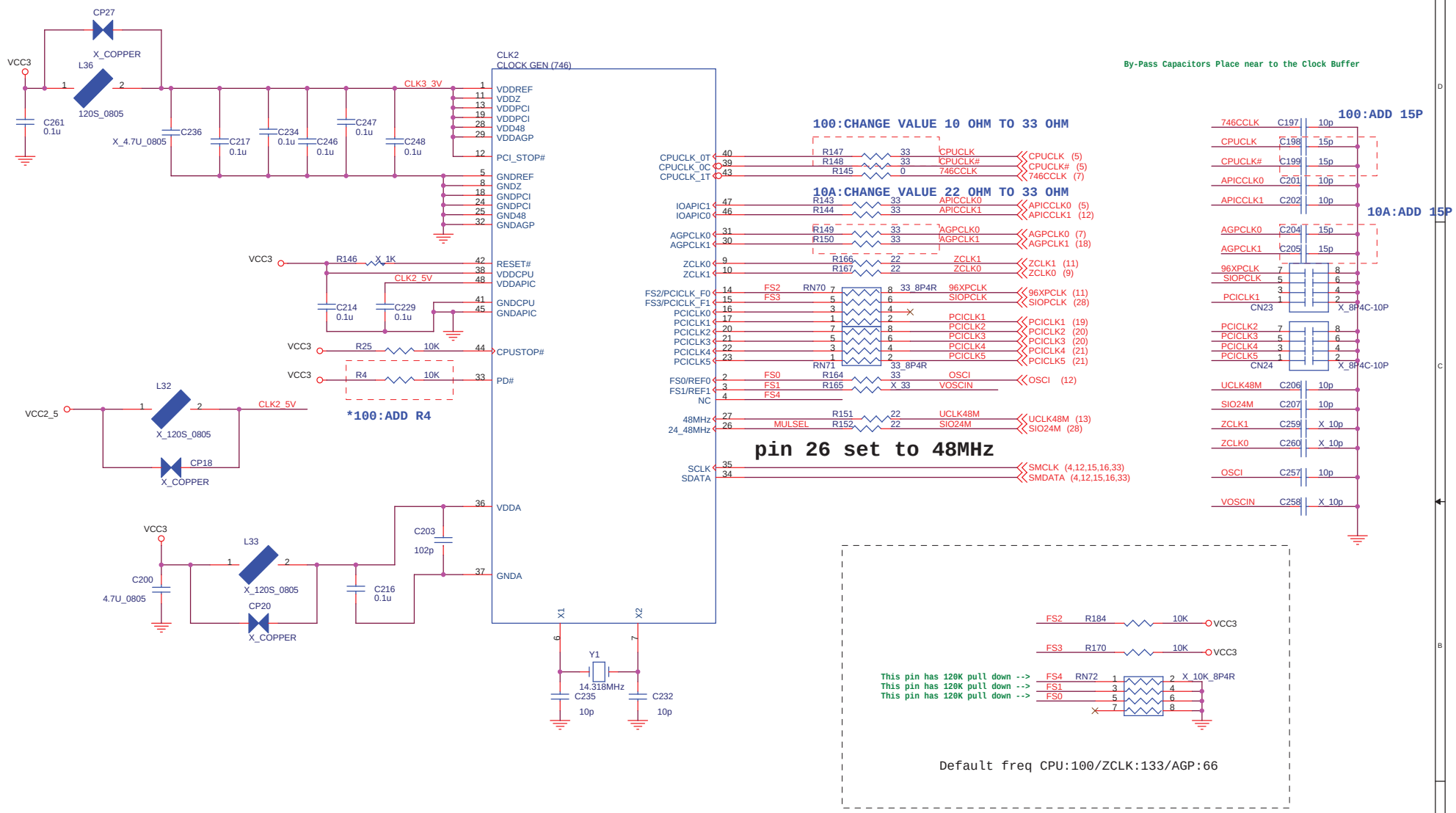

MICRO-STAR INT'L CO.,LTD.		
Title: CLOCK GEN		
Size: Custom	Document Number: MS-6717	Rev: 0B
Date: Tuesday, December 24, 2002	Sheet 3 of 36	

Clock Buffer (FOR 3 DDR SDRAM DIMMS)

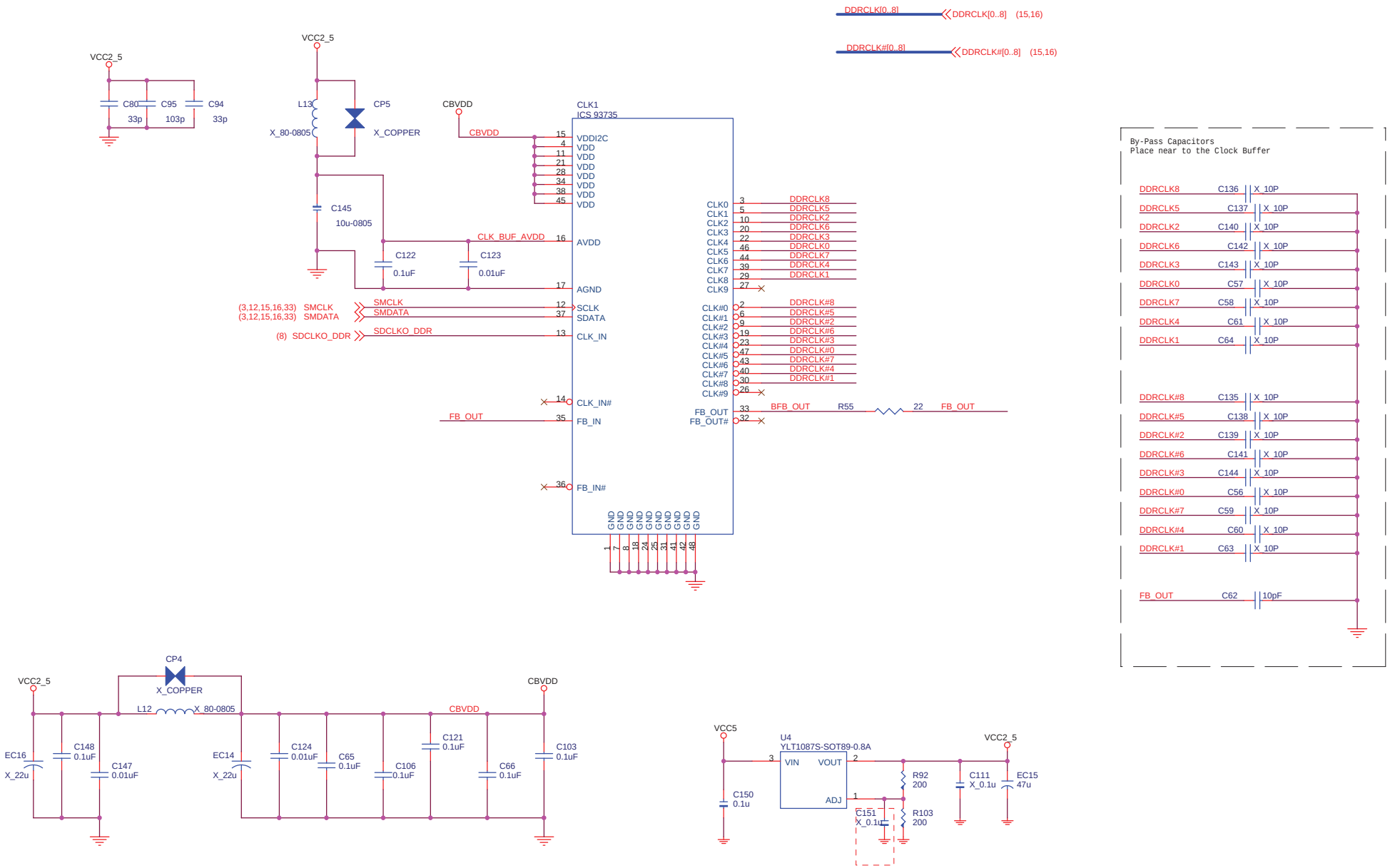

MICRO-STAR INT'L CO.,LTD.	
Title	CLOCK BUFFER
Size / Custom	Document Number MS-6717 — Rev 0B
Date: Monday, December 23, 2002	Sheet 4 of 36

AMD 462PGA Socket - Signals

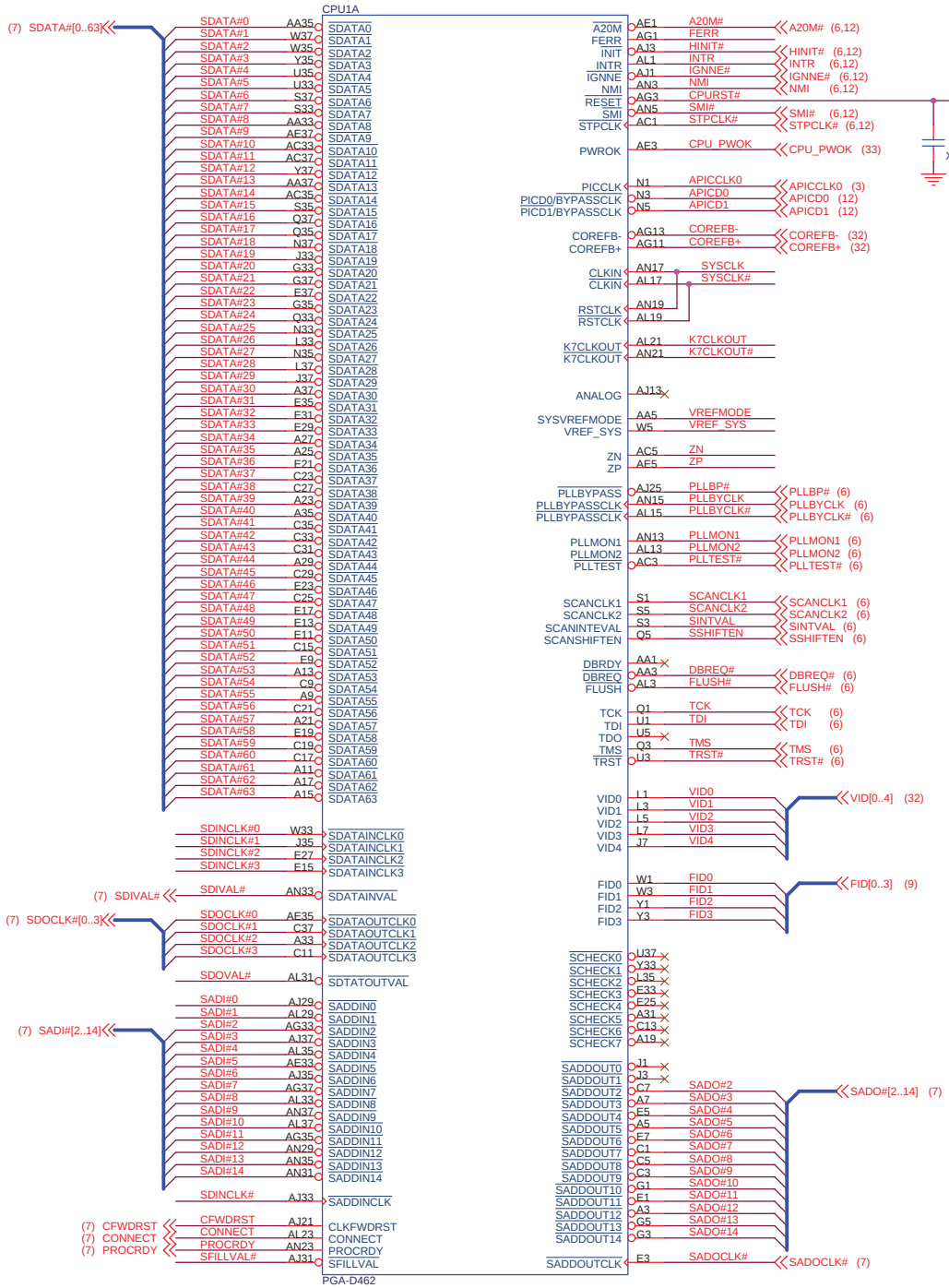

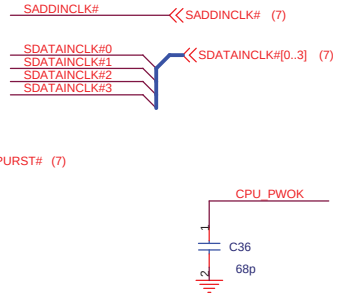

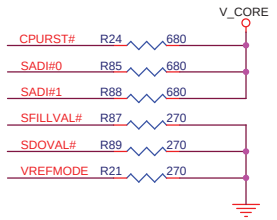

CPU APIC BLOCK

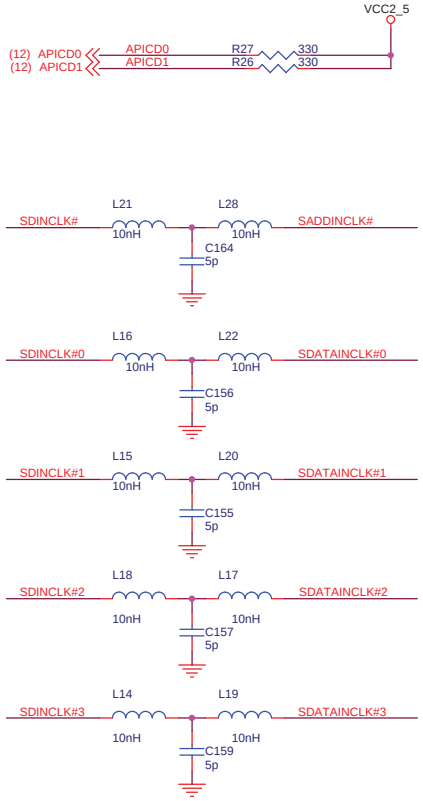

CPU FERR BLOCK

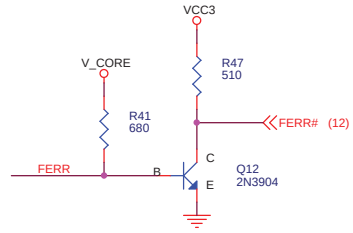

CPU SYSCLK BLOCK

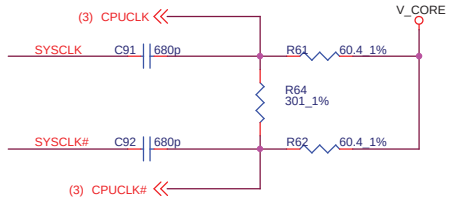

Near socket-A

CPU SYSCLK REFERNCE BLOCK

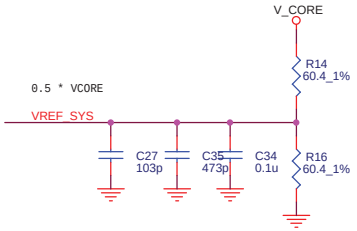

CPU ZN / ZP BLOCK

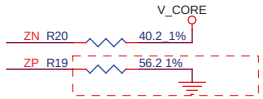

***100:FOR S2K PMOS DRIVING**

match the transmission line

Push-pull compensation circuit

CPU K7CLKOUT BLOCK

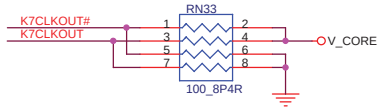

**** Trace lengths of CLKOUT and -CLKOUT are between 2" and 3"***

MICRO-STAR INT'L CO.,LTD.			
Title	SOCKET A SIGNALS		
Size	Document Number MS-6717		Rev 0B
Custom			
Date: Monday, December 23, 2002	Sheet 5 of 36		

AMD 462PGA Socket - Power

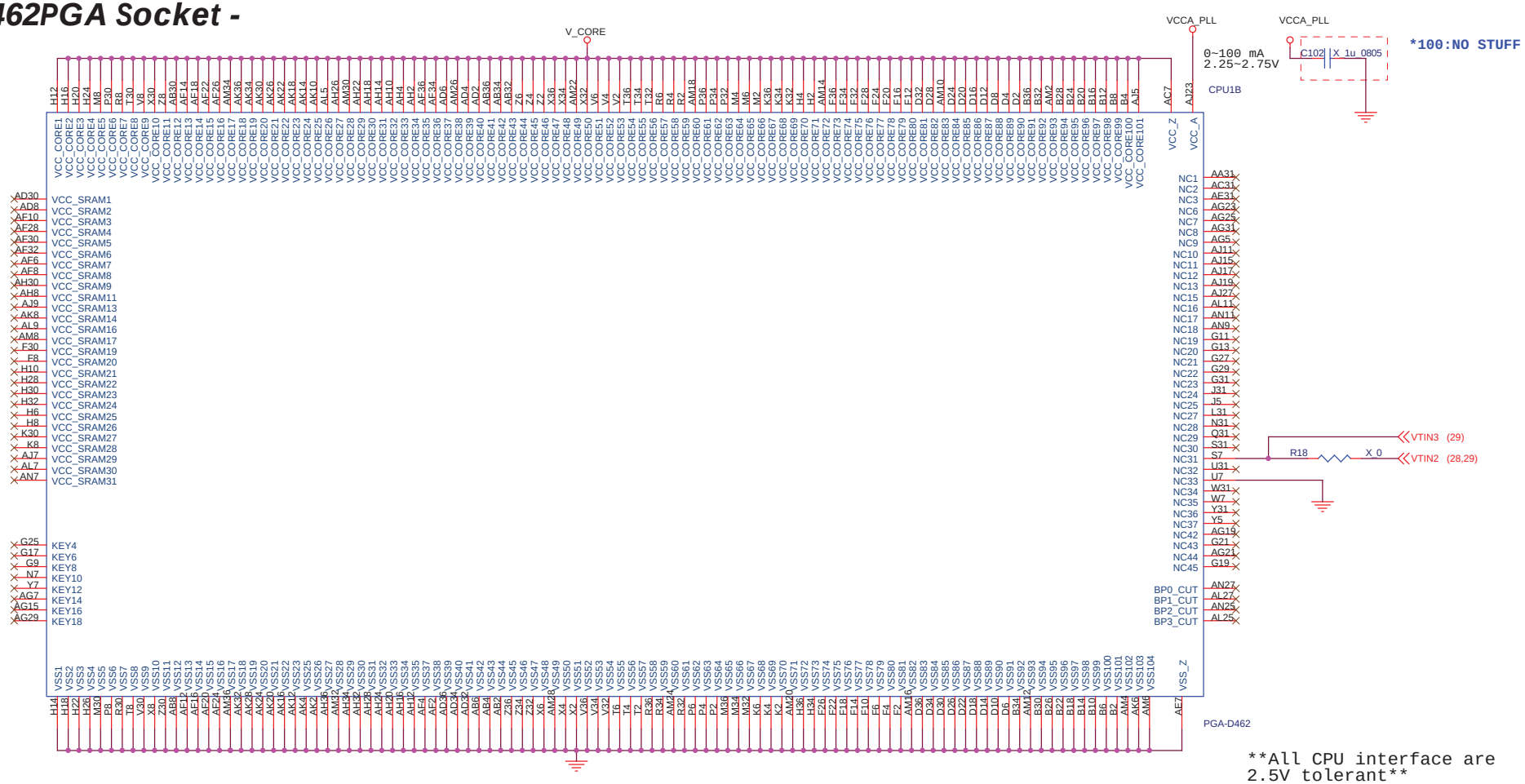

All CPU interface are 2.5V tolerant

CPU DECOUPLING CAPACITORS

DECOUPLING CAPACITOR
,Place on Inside socket.

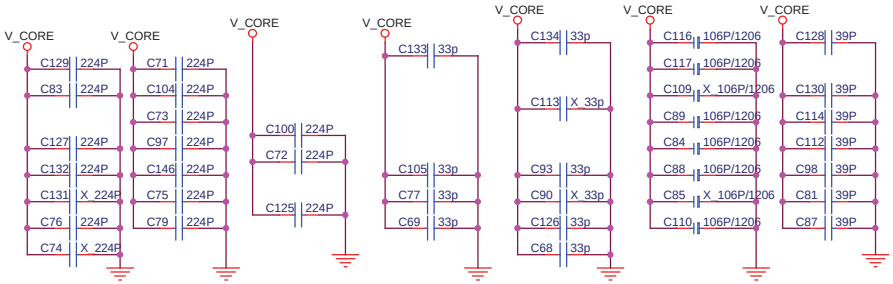

place on
solder side
inside socket

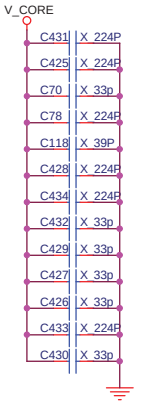

CPU PULL-UP / DOWN BLOCK

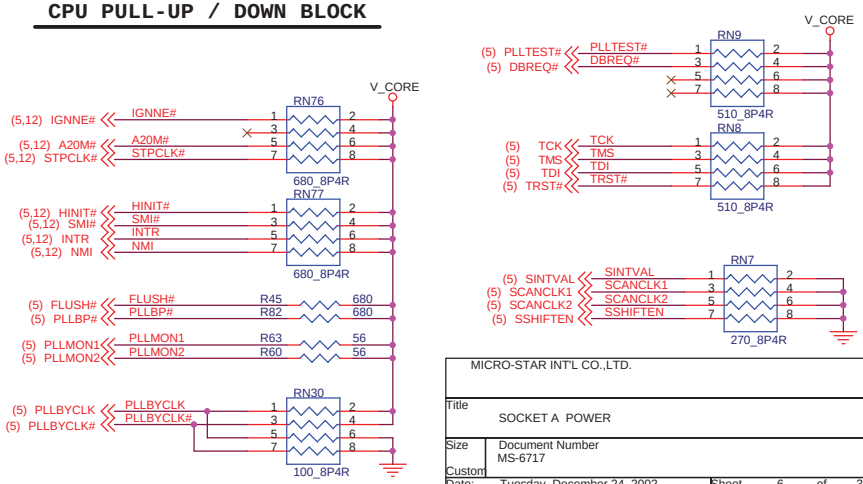

MICRO-STAR INT'L CO.,LTD.			
Title	SOCKET A POWER		
Size	Document Number MS-6717		Rev 0B
Custom			
Date: Tuesday, December 24, 2002		Sheet 6 of 36	

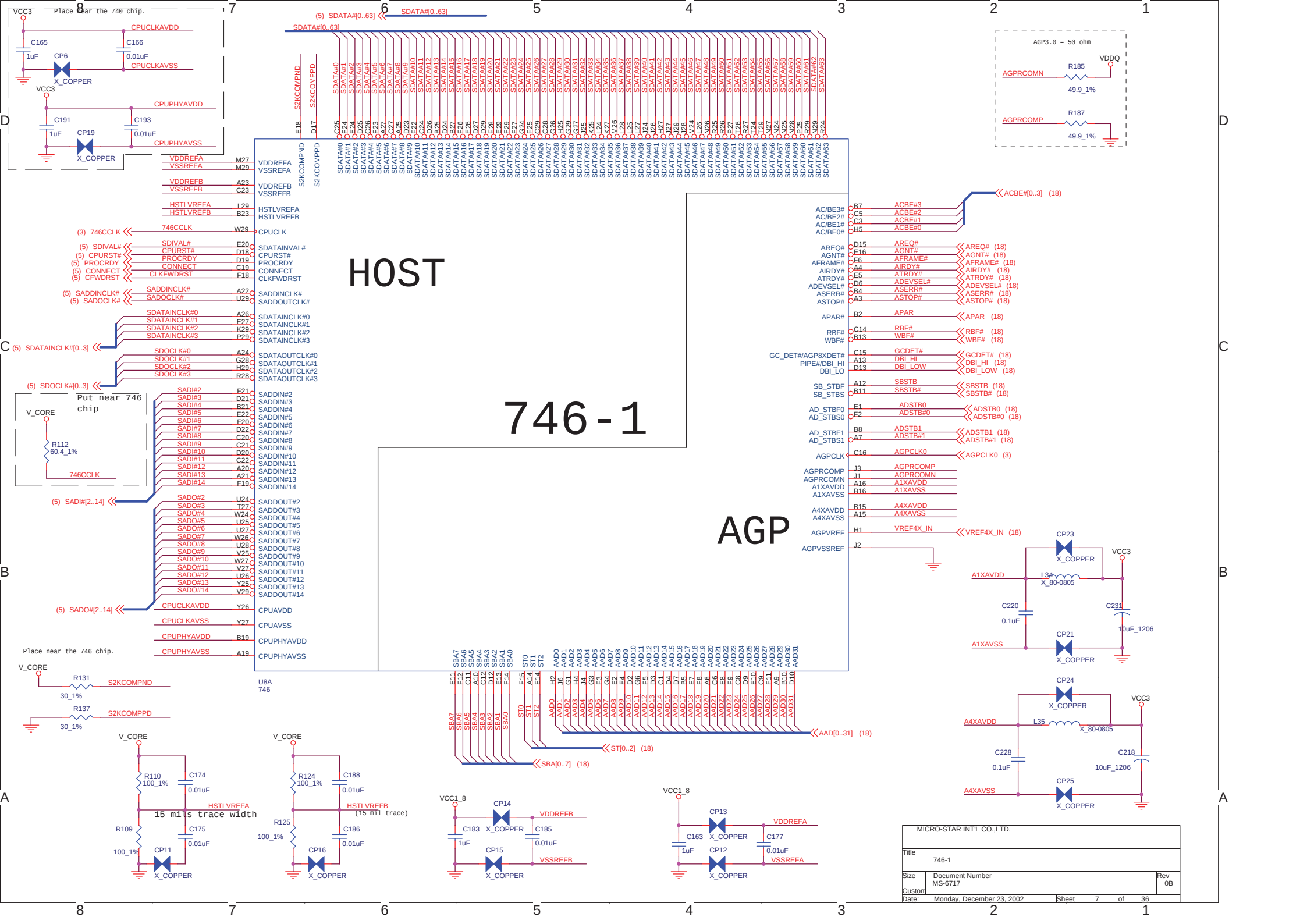
HOST
746-1
AGP
U8A
746
Place near the 740 chip.
Put near 746 chip
Place near the 746 chip.
15 mils trace width
(15 mil trace)
AGP3.0 = 50 ohm
MICRO-STAR INT'L CO.,LTD.
Title
746-1
Size
Document Number
MS-6717
Rev
0B
Custom
Date: Monday, December 23, 2002
Sheet 7 of 36

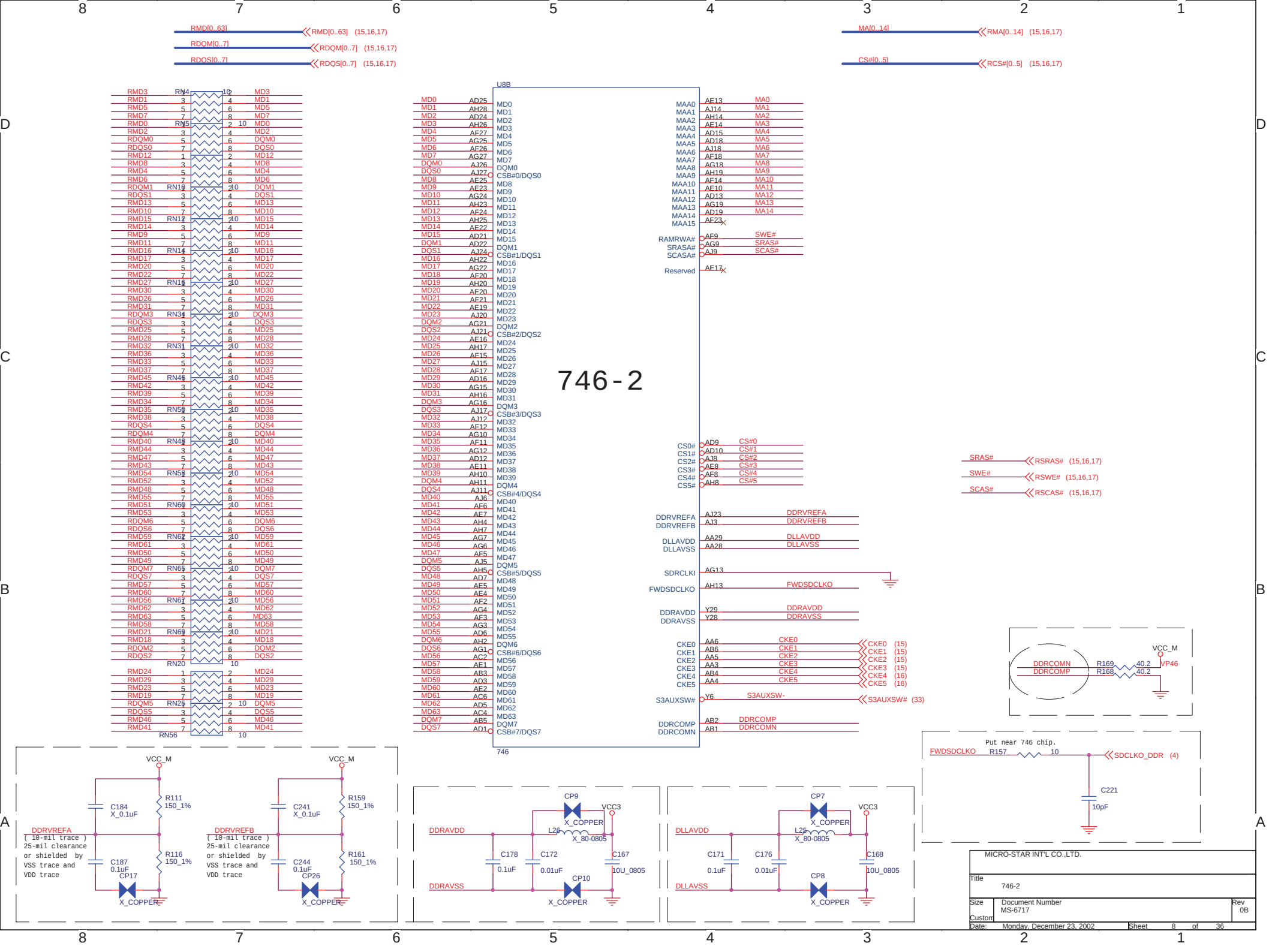
RMD[0..63] RMD[0..63] (15,16,17)
RDQM[0..7] RDQM[0..7] (15,16,17)
RDQS[0..7] RDQS[0..7] (15,16,17)
MA[0..14] RMA[0..14] (15,16,17)
CS#[0..5] RCS#[0..5] (15,16,17)
U8B
746-2
746
SRAS# RSRAS# (15,16,17)
SWE# RSWE# (15,16,17)
SCAS# RSCAS# (15,16,17)
VCC_M
DDRCOMN R169 40.2 VP46
DDRCOMP R168 40.2
Put near 746 chip.
FWDSDCLKO R157 10 SDCLKO_DDR (4)
C221 10pF
VCC_M
C184 X_0.1uF
R111 150_1%
DDRVREFA
(10-mil trace)
25-mil clearance
or shielded by
VSS trace and
VDD trace
C187 0.1uF
R116 150_1%
CP17 X_COPPER
VCC_M
C241 X_0.1uF
R159 150_1%
DDRVREFB
(10-mil trace)
25-mil clearance
or shielded by
VSS trace and
VDD trace
C244 0.1uF
R161 150_1%
CP26 X_COPPER
DDRAVDD
CP9 X_COPPER
VCC3
L26 X_80-0805
C178 0.1uF
C172 0.01uF
C167 10U_0805
CP10 X_COPPER
DDRAVSS
DLLAVDD
CP7 X_COPPER
VCC3
L25 X_80-0805
C171 0.1uF
C176 0.01uF
C168 10U_0805
CP8 X_COPPER
DLLAVSS
MICRO-STAR INT'L CO.,LTD.
Title
746-2
Size
Document Number
MS-6717
Rev
0B
Custom
Date: Monday, December 23, 2002
Sheet 8 of 36

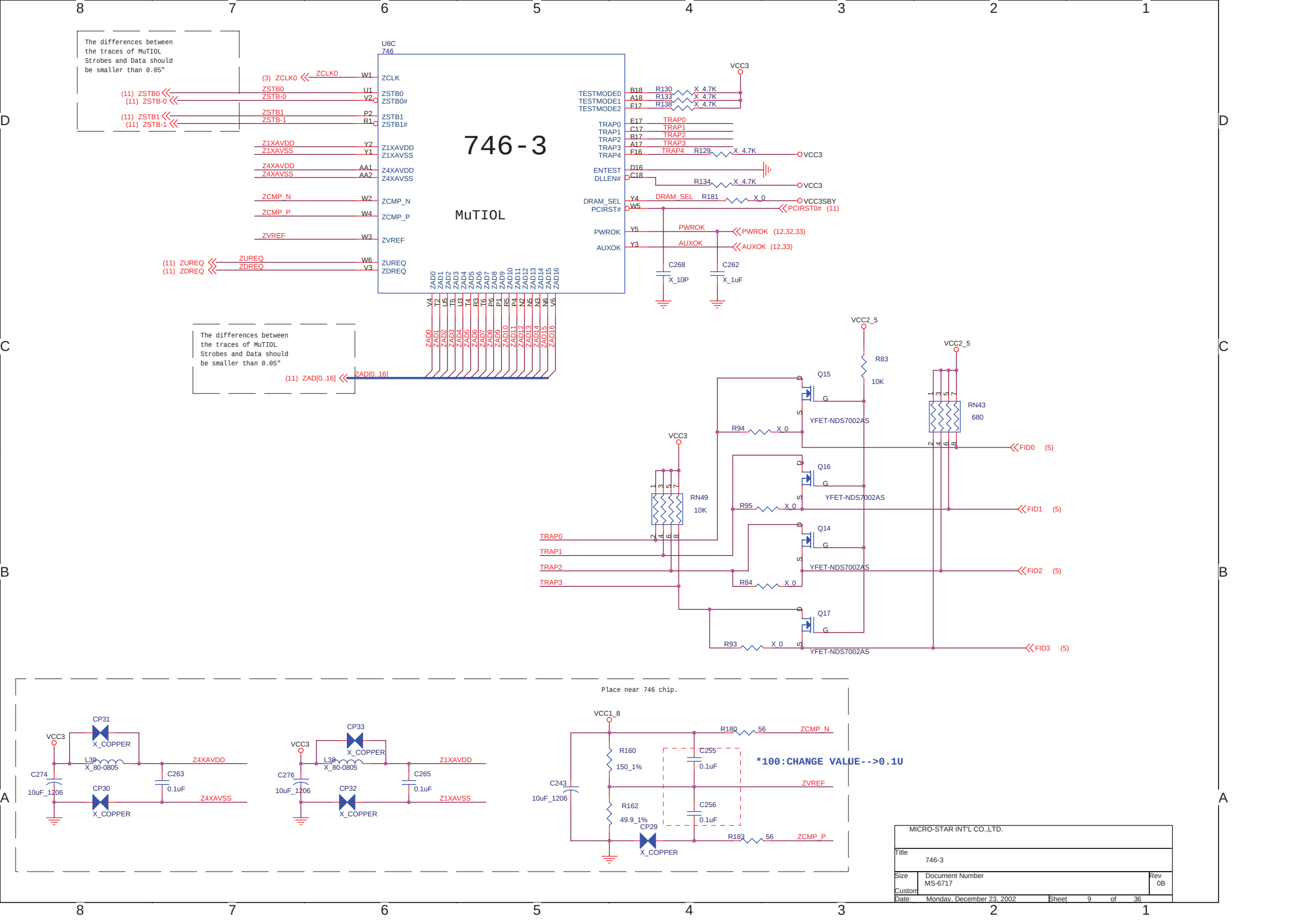
The differences between the traces of MuTIOL Strobes and Data should be smaller than 0.05"
U8C
746
746-3
MuTIOL
(3) ZCLK0
ZCLK0
W1
ZCLK
(11) ZSTB0
(11) ZSTB-0
ZSTB0
ZSTB-0
U1
V2
ZSTB0
ZSTB0#
(11) ZSTB1
(11) ZSTB-1
ZSTB1
ZSTB-1
P2
R1
ZSTB1
ZSTB1#
Z1XAVDD
Z1XAVSS
Y2
Y1
Z1XAVDD
Z1XAVSS
Z4XAVDD
Z4XAVSS
AA1
AA2
Z4XAVDD
Z4XAVSS
ZCMP_N
W2
ZCMP_N
ZCMP_P
W4
ZCMP_P
ZVREF
W3
ZVREF
(11) ZUREQ
(11) ZDREQ
ZUREQ
ZDREQ
W6
V3
ZUREQ
ZDREQ
TESTMODE0
TESTMODE1
TESTMODE2
B18
A18
F17
R130
R133
R138
X_4.7K
VCC3
TRAP0
TRAP1
TRAP2
TRAP3
TRAP4
E17
C17
B17
A17
F16
R129
ENTEST
DLLEN#
D16
C18
R134
DRAM_SEL
PCIRST#
Y4
W5
DRAM_SEL
R181
X_0
VCC3SBY
PCIRST0# (11)
PWROK
AUXOK
Y5
Y3
PWROK (12,32,33)
AUXOK (12,33)
C268
X_10P
C262
X_1uF
ZAD0
ZAD1
ZAD2
ZAD3
ZAD4
ZAD5
ZAD6
ZAD7
ZAD8
ZAD9
ZAD10
ZAD11
ZAD12
ZAD13
ZAD14
ZAD15
ZAD16
(11) ZAD[0..16]
ZAD[0..16]
VCC2_5
R83
10K
Q15
Q16
Q14
Q17
YFET-NDS7002AS
RN43
680
RN49
10K
R94
R95
R84
R93
FID0 (5)
FID1 (5)
FID2 (5)
FID3 (5)
TRAP0
TRAP1
TRAP2
TRAP3
Place near 746 chip.
CP31
CP30
CP33
CP32
CP29
X_COPPER
L39
X_80-0805
C274
10uF_1206
C263
0.1uF
C276
C265
Z4XAVDD
Z4XAVSS
Z1XAVDD
Z1XAVSS
VCC1_8
R180
56
ZCMP_N
R160
150_1%
C255
0.1uF
*100:CHANGE VALUE-->0.1U
C243
ZVREF
R162
49.9_1%
C256
R183
ZCMP_P
MICRO-STAR INT'L CO.,LTD.
Title
746-3
Size
Document Number
MS-6717
Rev
0B
Custom
Date: Monday, December 23, 2002
Sheet 9 of 36

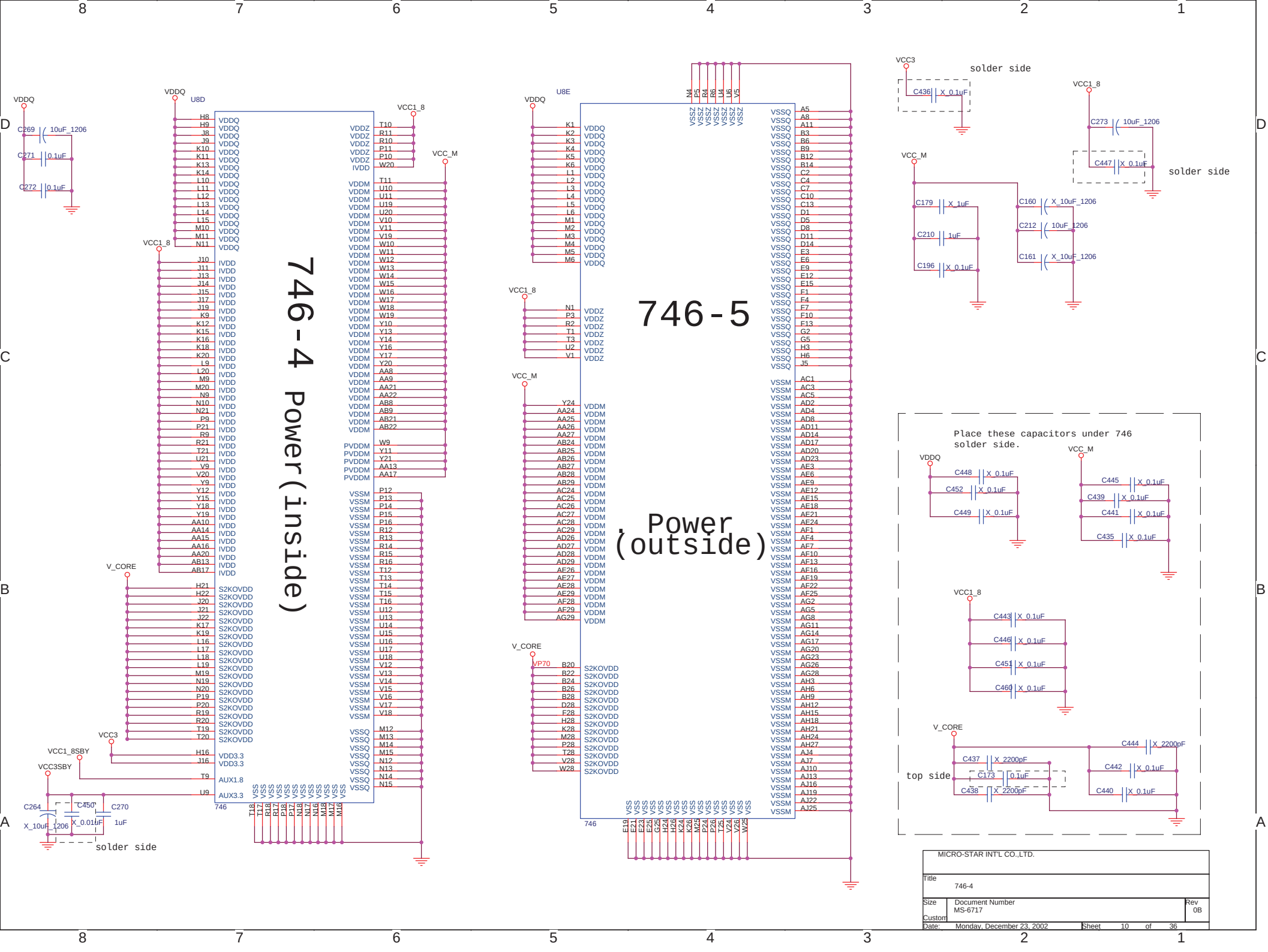
746-4 Power(inside)
746-5 Power (outside)
U8D
U8E
VDDQ
VCC1_8
VCC_M
V_CORE
VCC3
VCC1_8SBY
VCC3SBY
solder side
top side
Place these capacitors under 746 solder side.
C269 10uF_1206
C271 0.1uF
C272 0.1uF
C264 X_10uF_1206
C450 X_0.01uF
C270 1uF
C436 X_0.1uF
C273 10uF_1206
C447 X_0.1uF
C179 X_1uF
C210 1uF
C196 X_0.1uF
C160 X_10uF_1206
C212 10uF_1206
C161 X_10uF_1206
C448 X_0.1uF
C452 X_0.1uF
C449 X_0.1uF
C445 X_0.1uF
C439 X_0.1uF
C441 X_0.1uF
C435 X_0.1uF
C443 X_0.1uF
C446 X_0.1uF
C451 X_0.1uF
C460 X_0.1uF
C444 X_2200pF
C437 X_2200pF
C173 0.1uF
C438 X_2200pF
C442 X_0.1uF
C440 X_0.1uF
MICRO-STAR INT'L CO.,LTD.
Title
746-4
Size
Document Number
MS-6717
Rev
0B
Custom
Date: Monday, December 23, 2002
Sheet 10 of 36

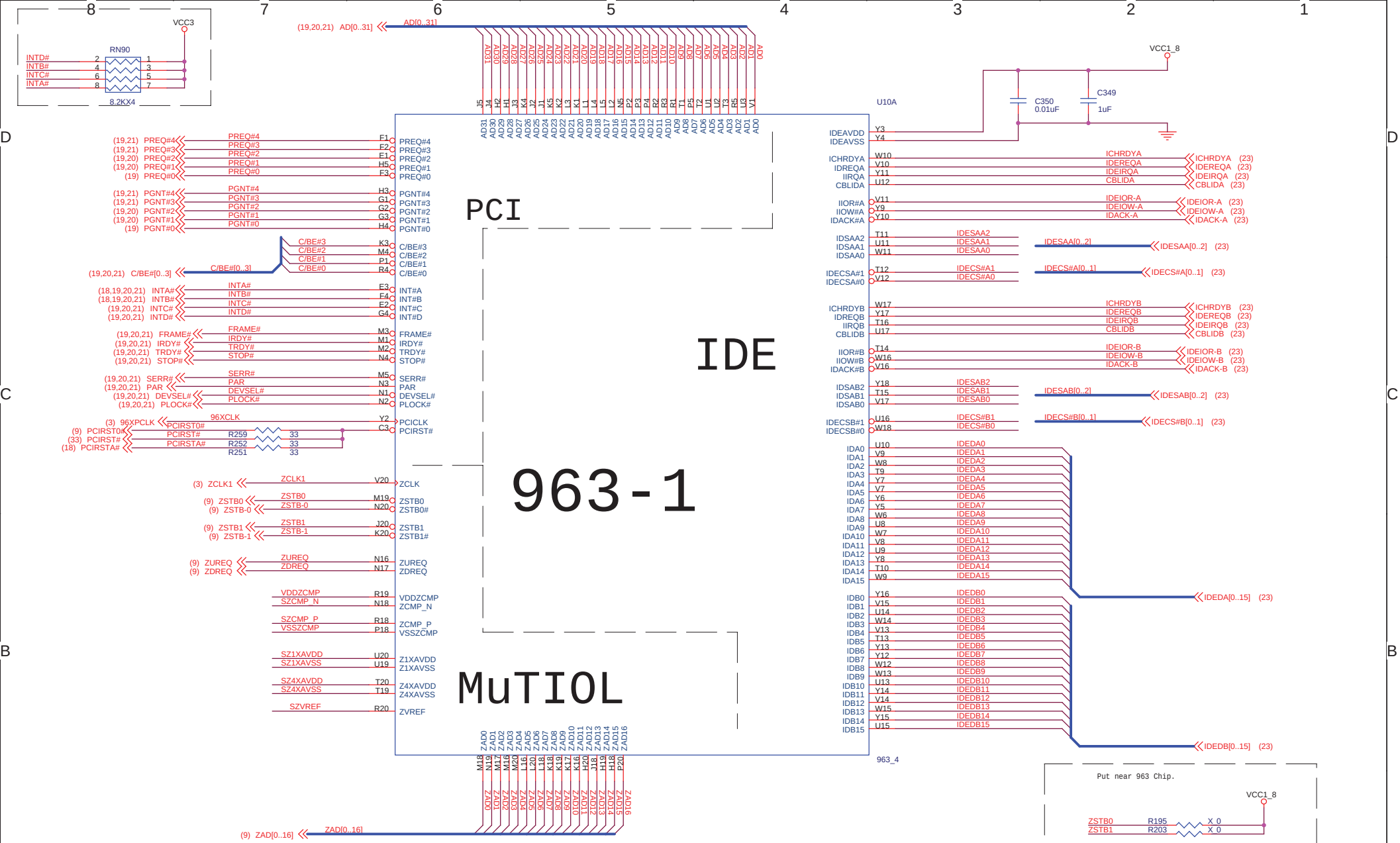
963-1
PCI
IDE
MuTIOL
U10A
963_4
RN90
8.2KX4
VCC3
VCC1_8
C350
0.01uF
C349
1uF
AD[0..31]
ZAD[0..16]
IDEDA[0..15]
IDEDB[0..15]
IDESAA[0..2]
IDESAB[0..2]
IDECS#A[0..1]
IDECS#B[0..1]
C/BE#[0..3]
PREQ#4
PREQ#3
PREQ#2
PREQ#1
PREQ#0
PGNT#4
PGNT#3
PGNT#2
PGNT#1
PGNT#0
INTA#
INTB#
INTC#
INTD#
FRAME#
IRDY#
TRDY#
STOP#
SERR#
PAR
DEVSEL#
PLOCK#
96XPCLK
96XCLK
PCIRST0#
PCIRST#
PCIRSTA#
R259
R252
R251
33
ZCLK1
ZSTB0
ZSTB-0
ZSTB1
ZSTB-1
ZUREQ
ZDREQ
VDDZCMP
SZCMP_N
SZCMP_P
VSSZCMP
SZ1XAVDD
SZ1XAVSS
SZ4XAVDD
SZ4XAVSS
SZVREF
IDEAVDD
IDEAVSS
ICHRDYA
IDEREQA
IIRQA
CBLIDA
IIOR#A
IIOW#A
IDACK#A
IDESAA2
IDESAA1
IDESAA0
IDECSA#1
IDECSA#0
IDECS#A1
IDECS#A0
ICHRDYB
IDEREQB
IIRQB
CBLIDB
IIOR#B
IIOW#B
IDACK#B
IDESAB2
IDESAB1
IDESAB0
IDECSB#1
IDECSB#0
IDECS#B1
IDECS#B0
IDA0
IDA1
IDA2
IDA3
IDA4
IDA5
IDA6
IDA7
IDA8
IDA9
IDA10
IDA11
IDA12
IDA13
IDA14
IDA15
IDB0
IDB1
IDB2
IDB3
IDB4
IDB5
IDB6
IDB7
IDB8
IDB9
IDB10
IDB11
IDB12
IDB13
IDB14
IDB15
Put near 963 Chip.
R195
R203
R196
R204
X_0
Analog Power supplies of Transzip function for 963 Chip.
CP38
CP37
X_COPPER
L42
L41
X_80-0805
C295
C296
C289
C290
1uF
0.01uF
JP3
JP2
JP1
SHORT
SZ1XAVDD
SZ1XAVSS
SZ4XAVDD
SZ4XAVSS
R198
R199
150_1%
49.9_1%
C288
C287
0.1uF
R205
R206
56
VDDZCMP
SZCMP_N
SZVREF
SZCMP_P
VSSZCMP
MICRO-STAR INT'L CO.,LTD.
Title
963-1
Size
Document Number
MS-6717
Rev
0B
Custom
Date:
Monday, December 23, 2002
Sheet
11
of
36

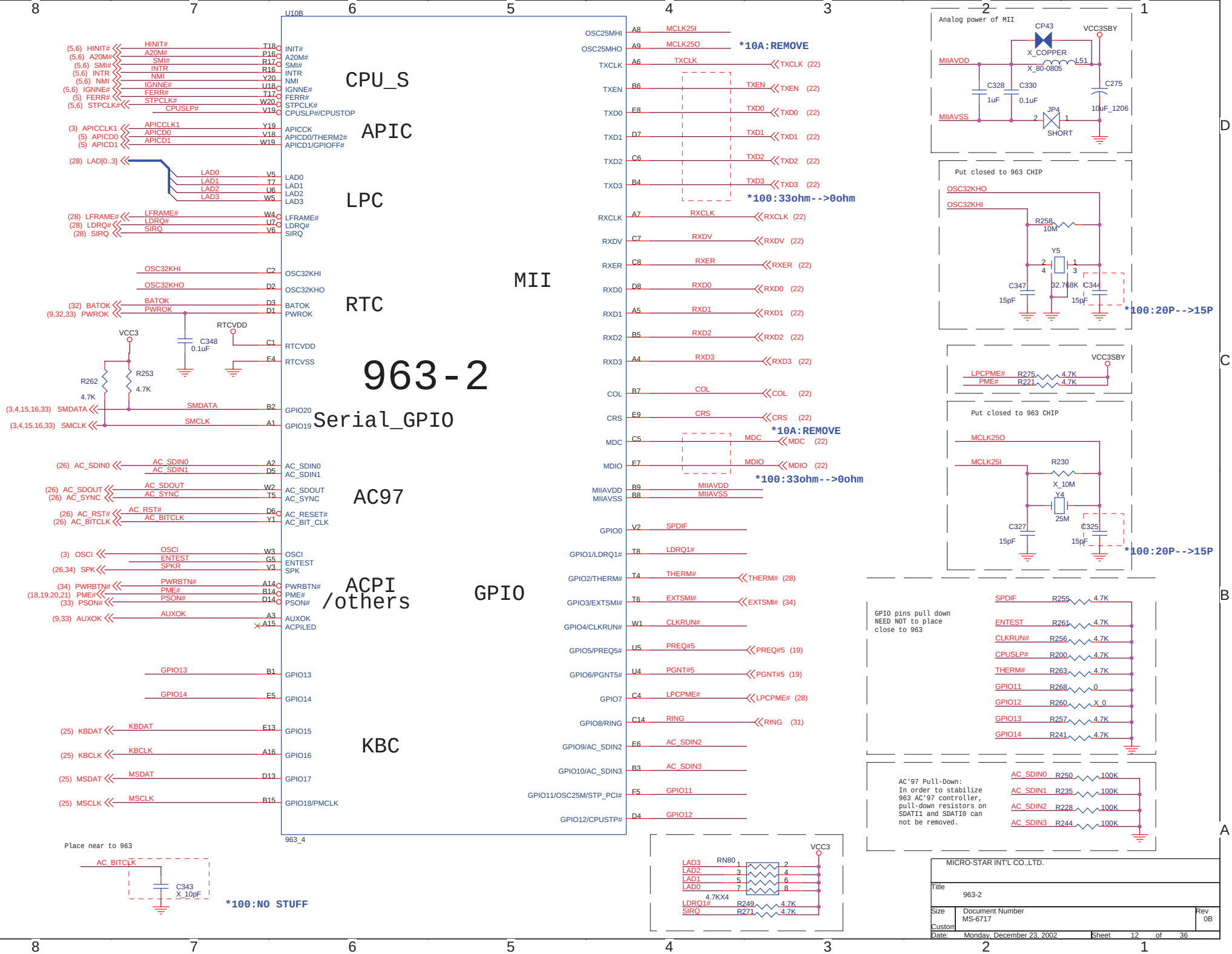
U10B
963-2
CPU_S
APIC
LPC
RTC
Serial_GPIO
AC97
ACPI /others
KBC
MII
GPIO
963_4
*10A:REMOVE
*100:33ohm-->0ohm
*100:20P-->15P
*100:NO STUFF
Analog power of MII
Put closed to 963 CHIP
GPIO pins pull down NEED NOT to place close to 963
AC'97 Pull-Down: In order to stabilize 963 AC'97 controller, pull-down resistors on SDATI1 and SDATI0 can not be removed.
Place near to 963
MICRO-STAR INT'L CO.,LTD.
Title 963-2
Size Document Number MS-6717 Rev 0B
Custom
Date: Monday, December 23, 2002 Sheet 12 of 36

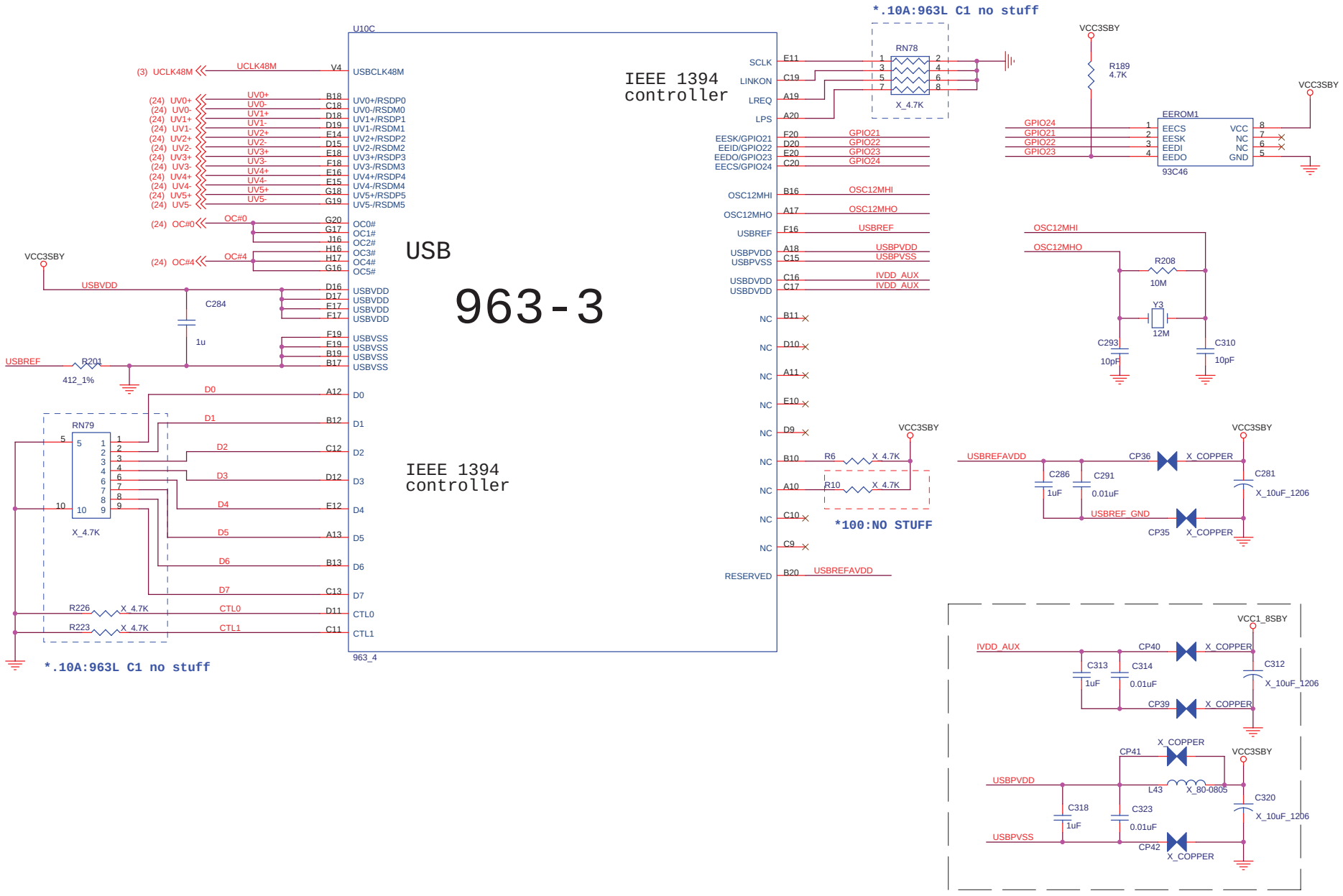

MICRO-STAR INT'L CO.,LTD.

Title	963-3	
Size	Document Number MS-6717	Rev 0B
Custom		
Date: Monday, December 23, 2002	Sheet 13 of 36	

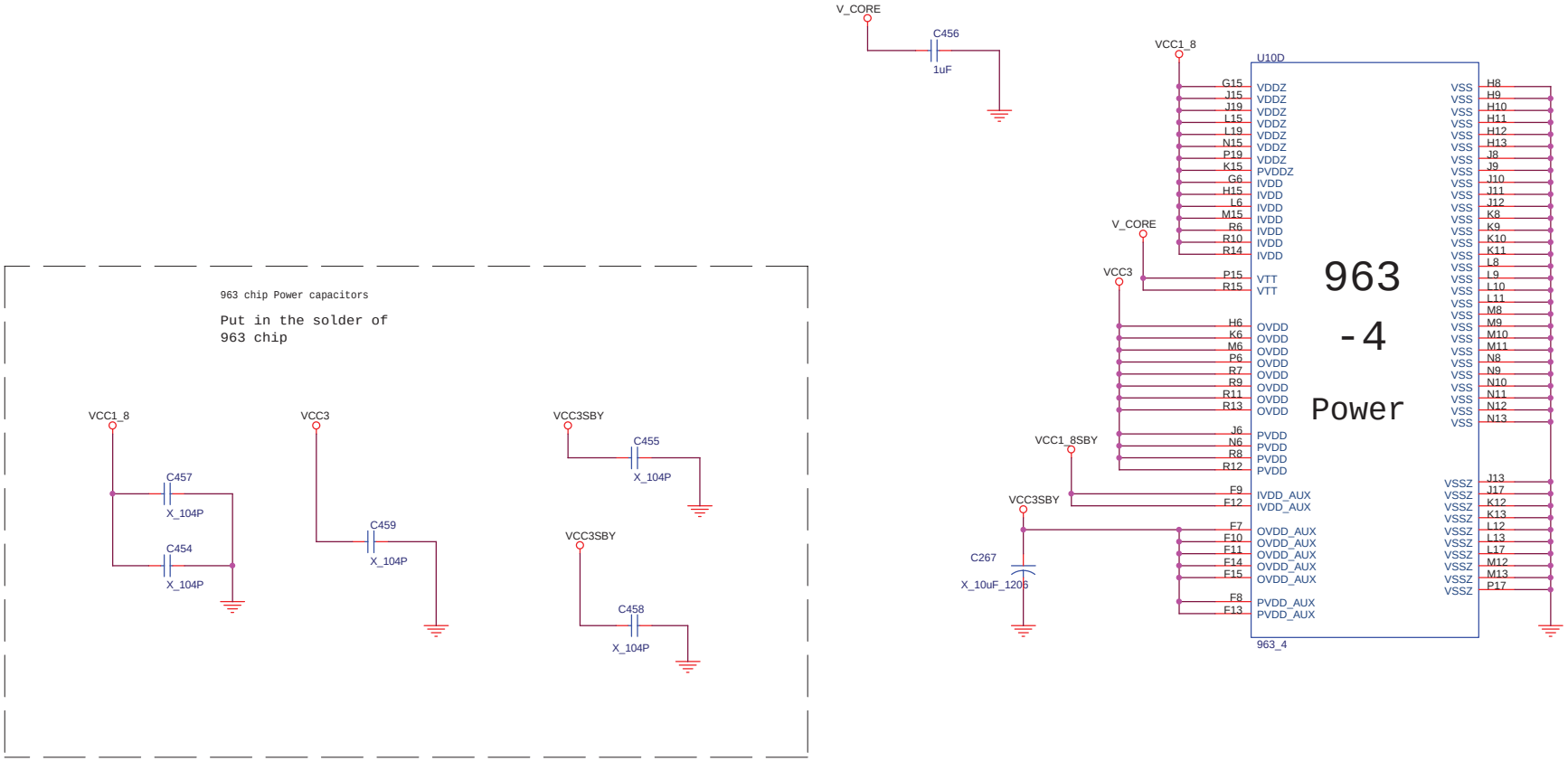

MICRO-STAR INT'L CO.,LTD.		
Title 963-4		
Size Custom	Document Number MS-6717	Rev 0B
Date: Wednesday, November 06, 2002	Sheet 14 of 36	

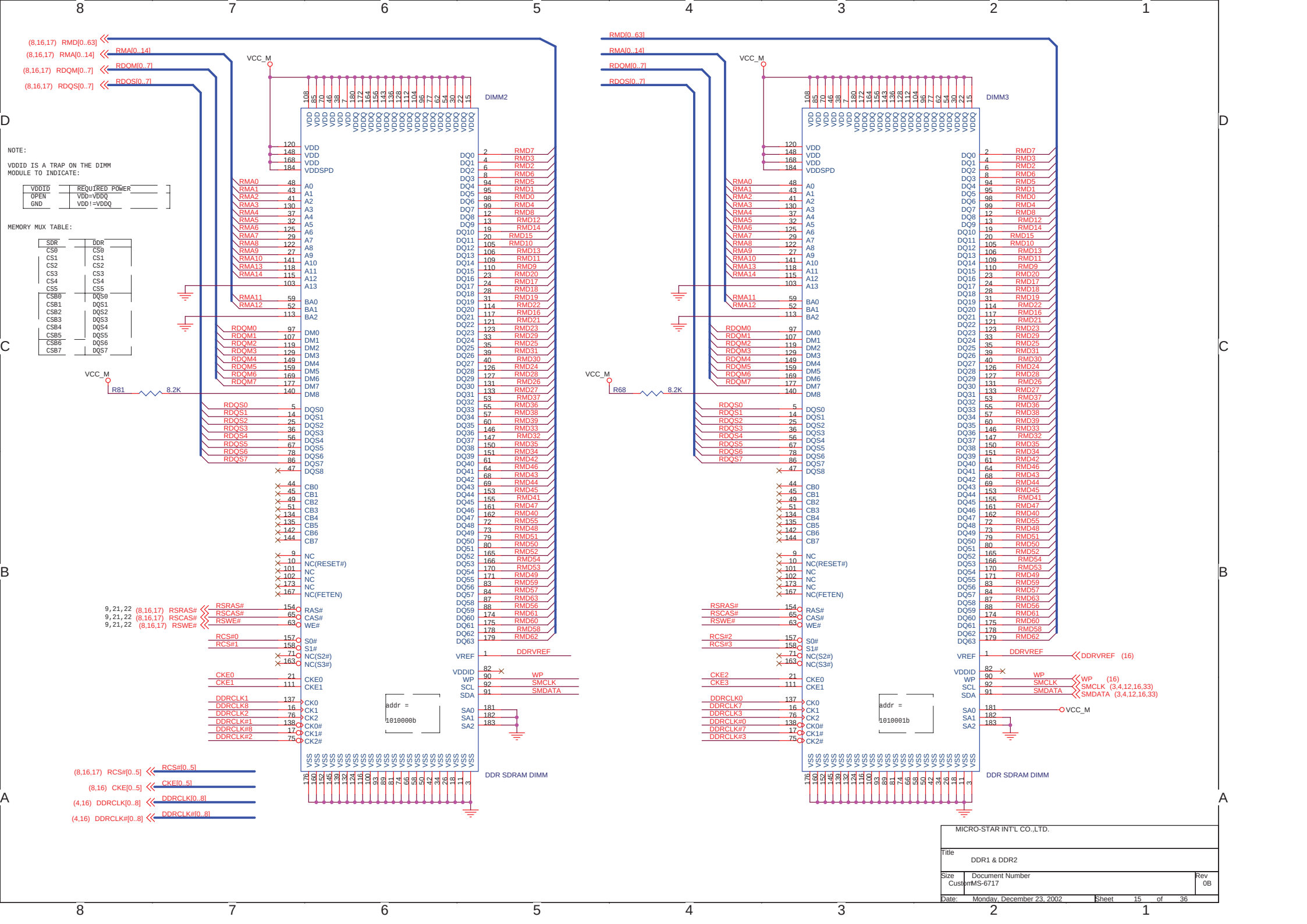
(8,16,17) RMD[0..63]
(8,16,17) RMA[0..14]
(8,16,17) RDQM[0..7]
(8,16,17) RDQS[0..7]
VCC_M
DIMM2
NOTE:
VDDID IS A TRAP ON THE DIMM MODULE TO INDICATE:
VDDID REQUIRED POWER
OPEN VDD=VDDQ
GND VDD!=VDDQ
MEMORY MUX TABLE:
SDR DDR
CS0 CS0
CS1 CS1
CS2 CS2
CS3 CS3
CS4 CS4
CS5 CS5
CSB0 DQS0
CSB1 DQS1
CSB2 DQS2
CSB3 DQS3
CSB4 DQS4
CSB5 DQS5
CSB6 DQS6
CSB7 DQS7
R81 8.2K
9,21,22 (8,16,17) RSRAS#
9,21,22 (8,16,17) RSCAS#
9,21,22 (8,16,17) RSWE#
addr = 1010000b
DDR SDRAM DIMM
(8,16,17) RCS#[0..5]
(8,16) CKE[0..5]
(4,16) DDRCLK[0..8]
(4,16) DDRCLK#[0..8]
DIMM3
R68 8.2K
addr = 1010001b
DDRDREF (16)
WP (16)
SMCLK (3,4,12,16,33)
SMDATA (3,4,12,16,33)
MICRO-STAR INT'L CO.,LTD.
Title
DDR1 & DDR2
Size Custom
Document Number MS-6717
Rev 0B
Date: Monday, December 23, 2002
Sheet 15 of 36

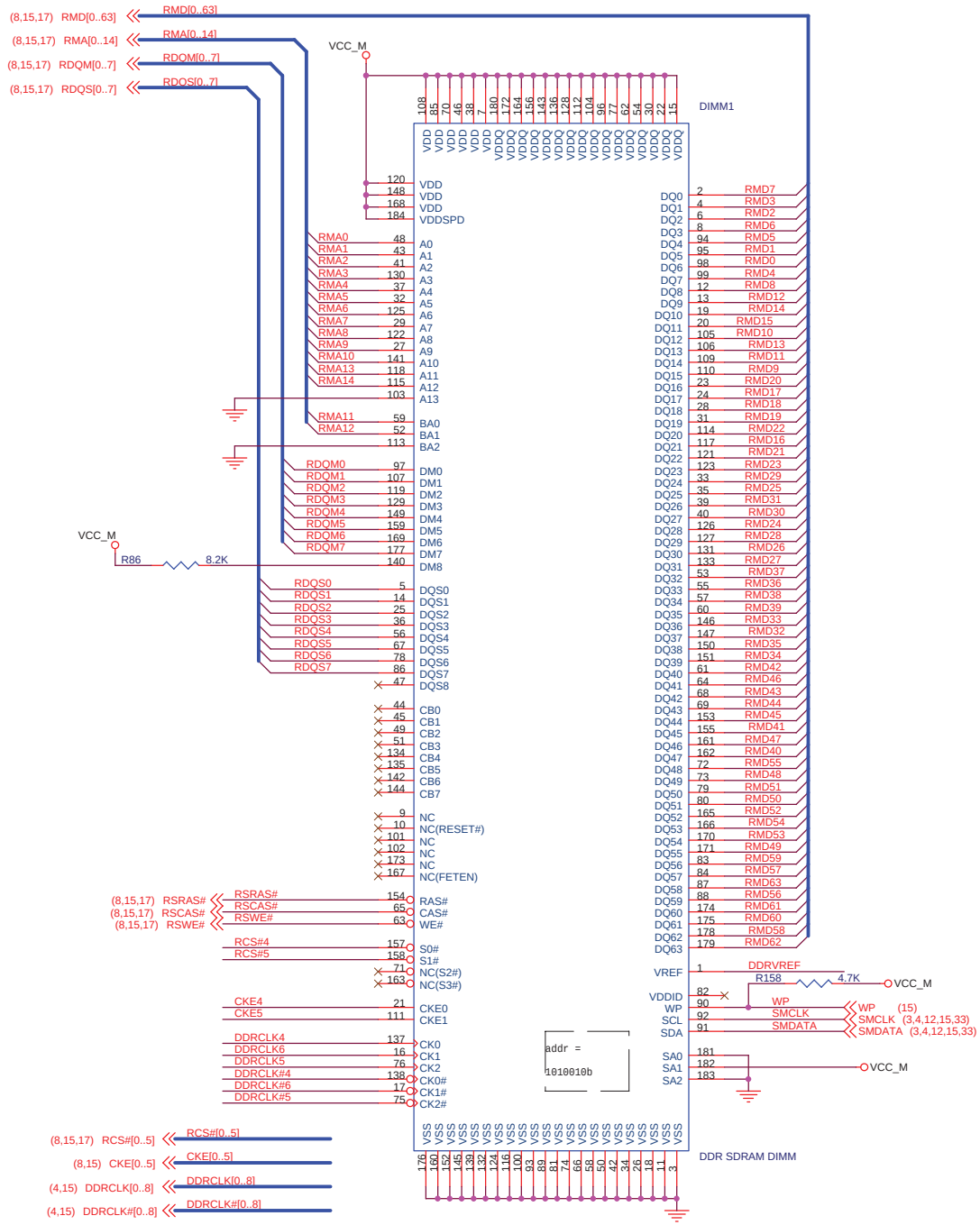

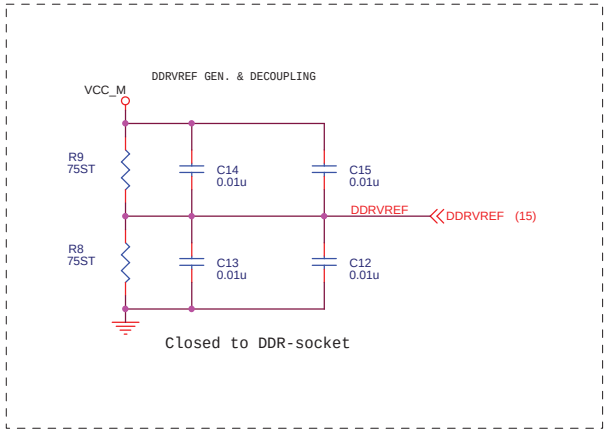

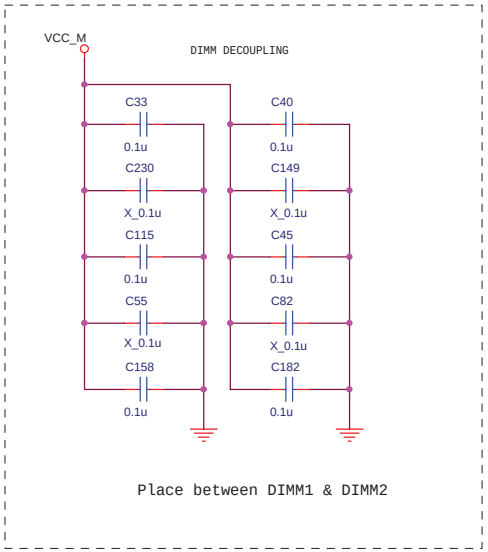

MICRO-STAR INT'L CO.,LTD.		
Title DDR3		
Size Custom	Document Number MS-6717	Rev 0B
Date: Monday, December 23, 2002	Sheet 16 of 36	

SSTL-2 Termination Resistors

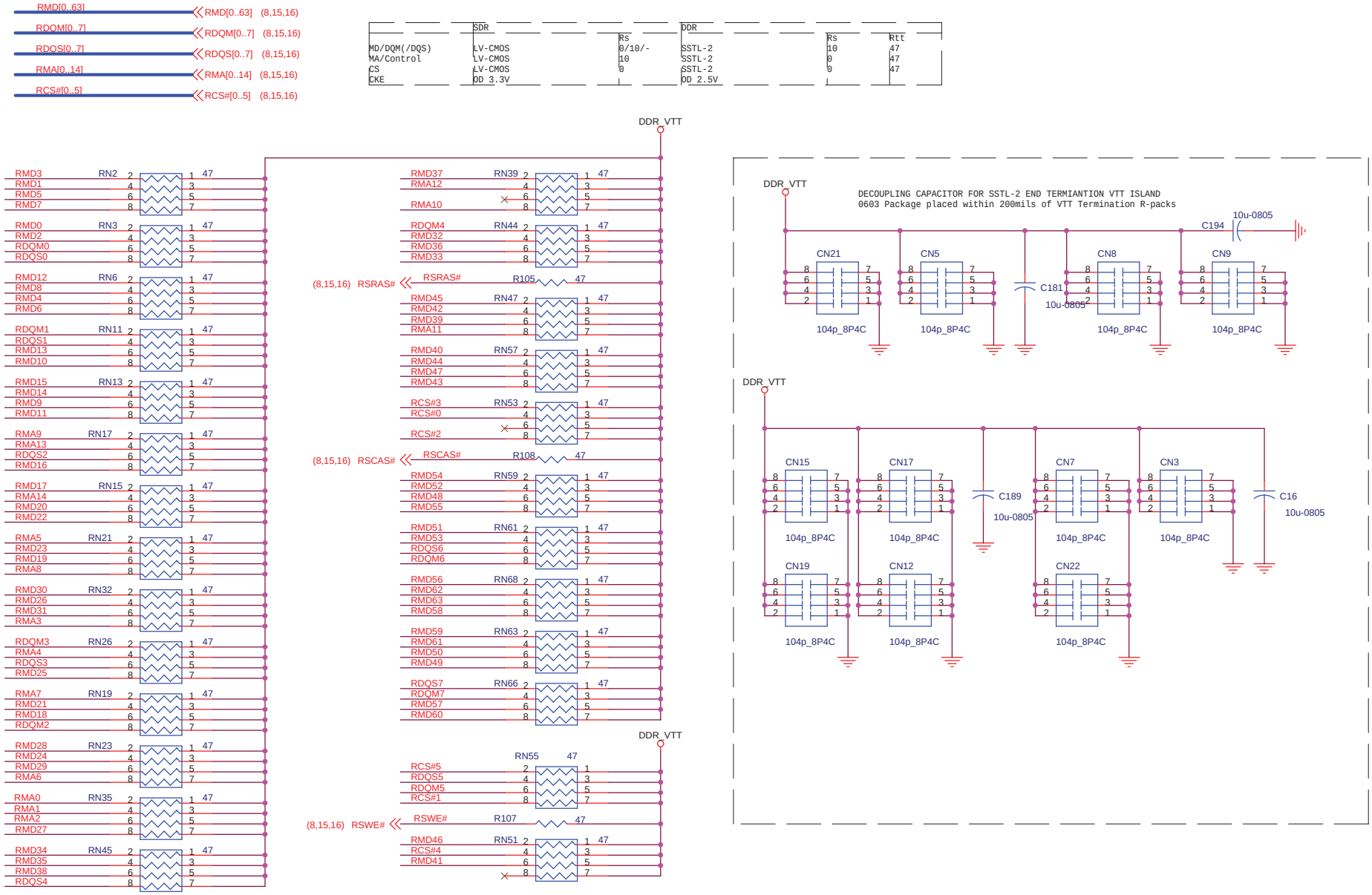

	SDR	Rs	DDR	Rs	Rtt
MD/DQM(/DQS)	LV-CMOS	0/10/-	SSTL-2	10	47
MA/Control	LV-CMOS	10	SSTL-2	0	47
CS	LV-CMOS	0	SSTL-2	0	47
CKE	OD 3.3V		OD 2.5V		

MICRO-STAR INT'L CO.,LTD.	
Title	DDR TERMINATOR
Size Custom	Document Number MS-6717
Rev	0B
Date:	Monday, December 23, 2002
Sheet	17 of 36

NOTE: This page is for universal PCB design(suitable for both 645 or 650)

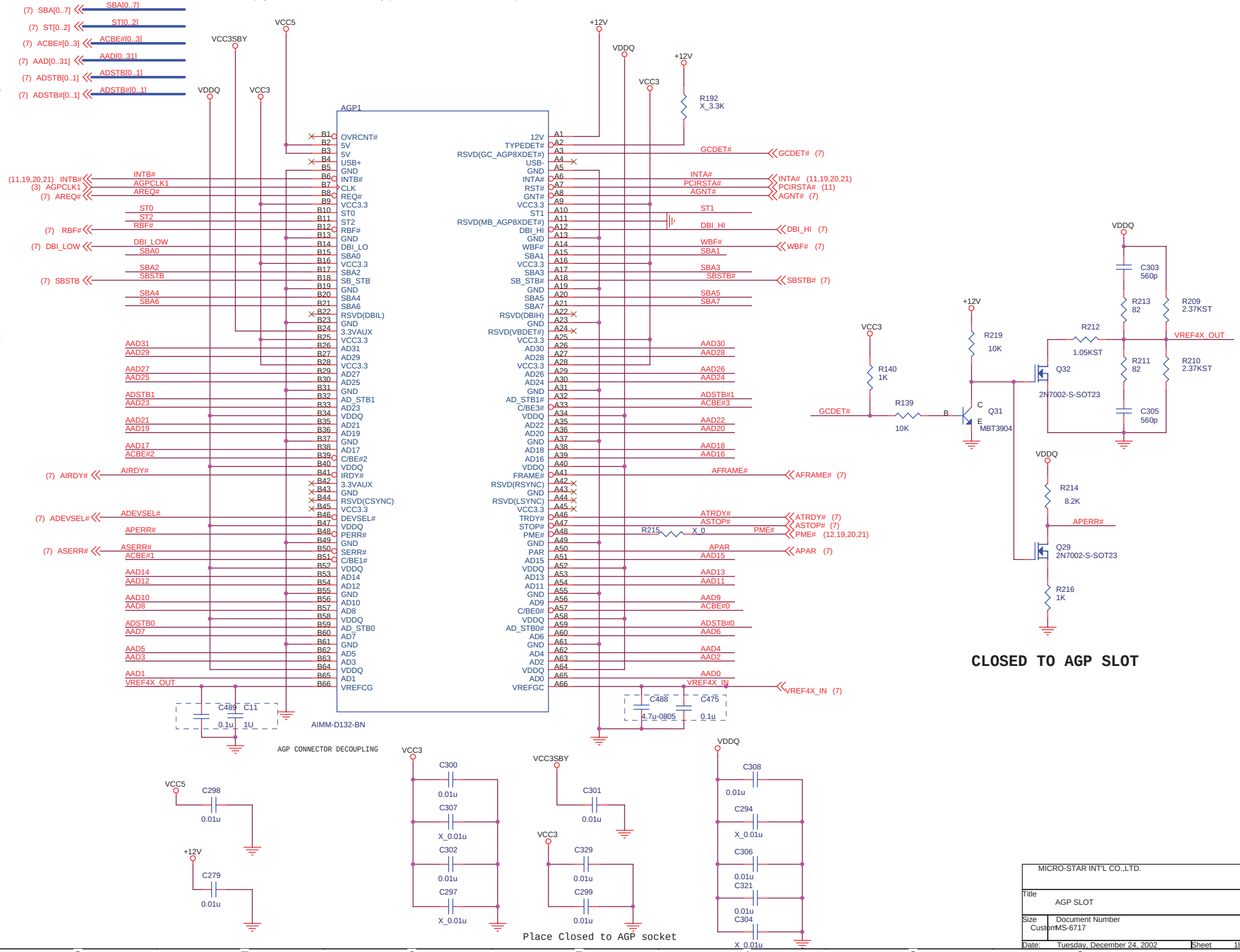

MICRO-STAR INT'L CO.,LTD.	
Title: AGP SLOT	
Size: Custom	Document Number: MS-6717
Rev: 0B	
Date: Tuesday, December 24, 2002	Sheet 18 of 36

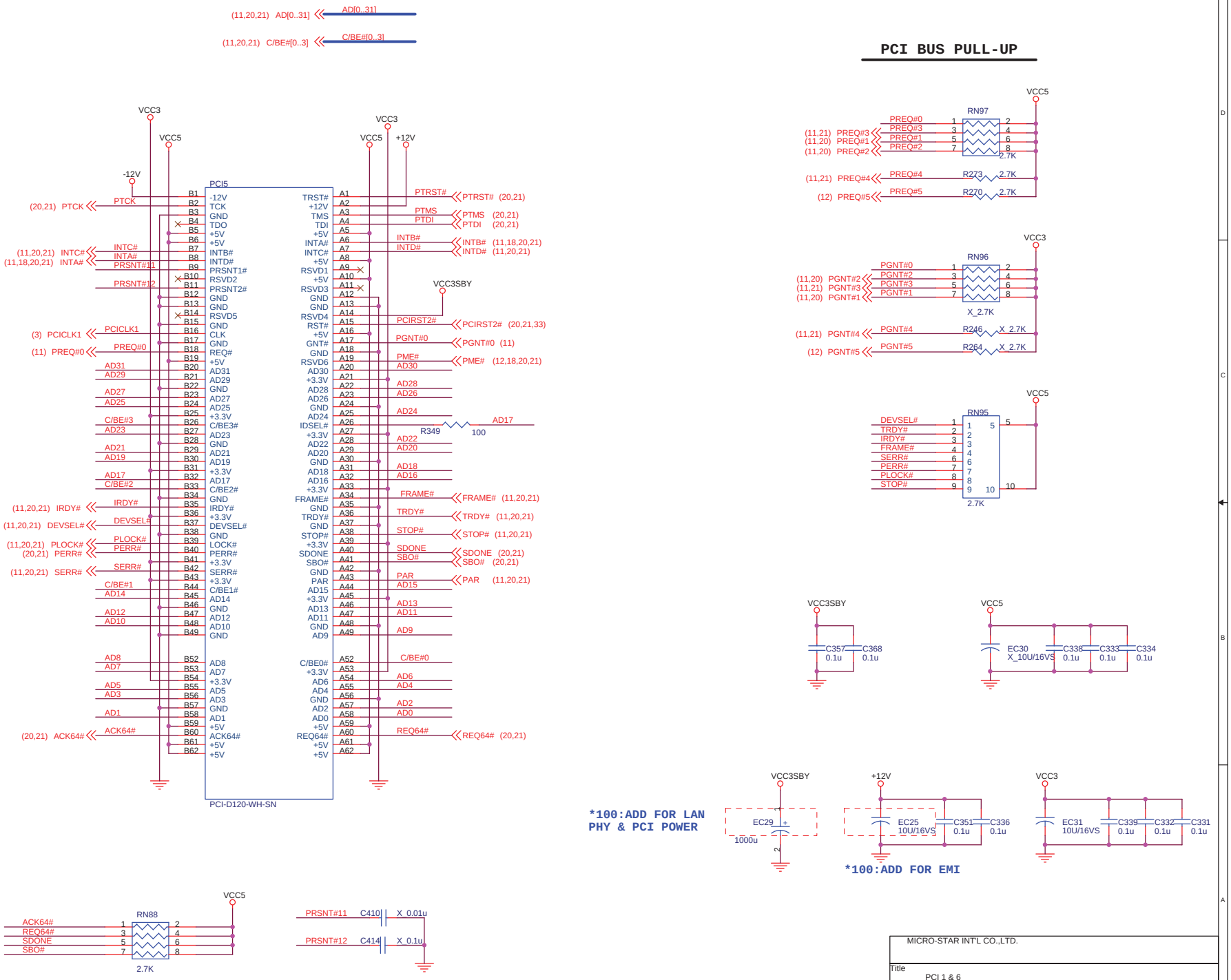
PCI BUS PULL-UP
(11,20,21) AD[0..31]
AD[0..31]
(11,20,21) C/BE#[0..3]
C/BE#[0..3]
PCI5
PCI-D120-WH-SN
VCC3
VCC5
-12V
+12V
VCC3SBY
RN97
RN96
RN95
RN88
R349
100
R273
R270
R246
R264
2.7K
X_2.7K
EC29
1000u
EC25
10U/16VS
EC30
X_10U/16VS
EC31
10U/16VS
C357
C368
C338
C333
C334
C351
C336
C339
C332
C331
0.1u
C410
C414
X_0.01u
X_0.1u
*100:ADD FOR LAN PHY & PCI POWER
*100:ADD FOR EMI
MICRO-STAR INT'L CO.,LTD.
Title
PCI 1 & 6
Size
Custom
Document Number
MS-6717
Rev
0B
Date:
Monday, December 23, 2002
Sheet
19
of
36

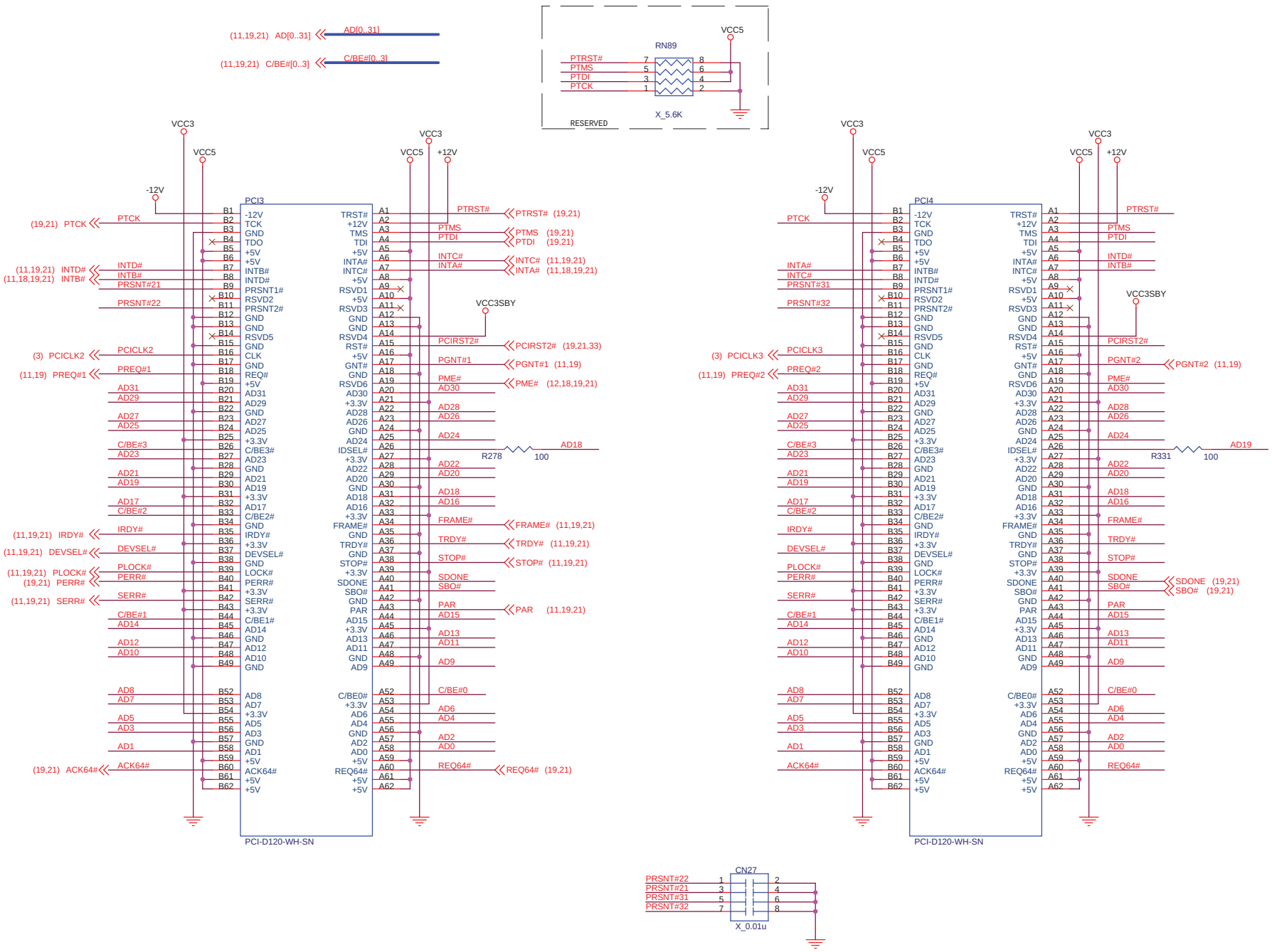

MICRO-STAR INT'L CO.,LTD.

Title: PCI 2 & 3

Size: Custom | Document Number: MS-6717 | Rev: 0B

Date: Monday, December 23, 2002 | Sheet 20 of 36

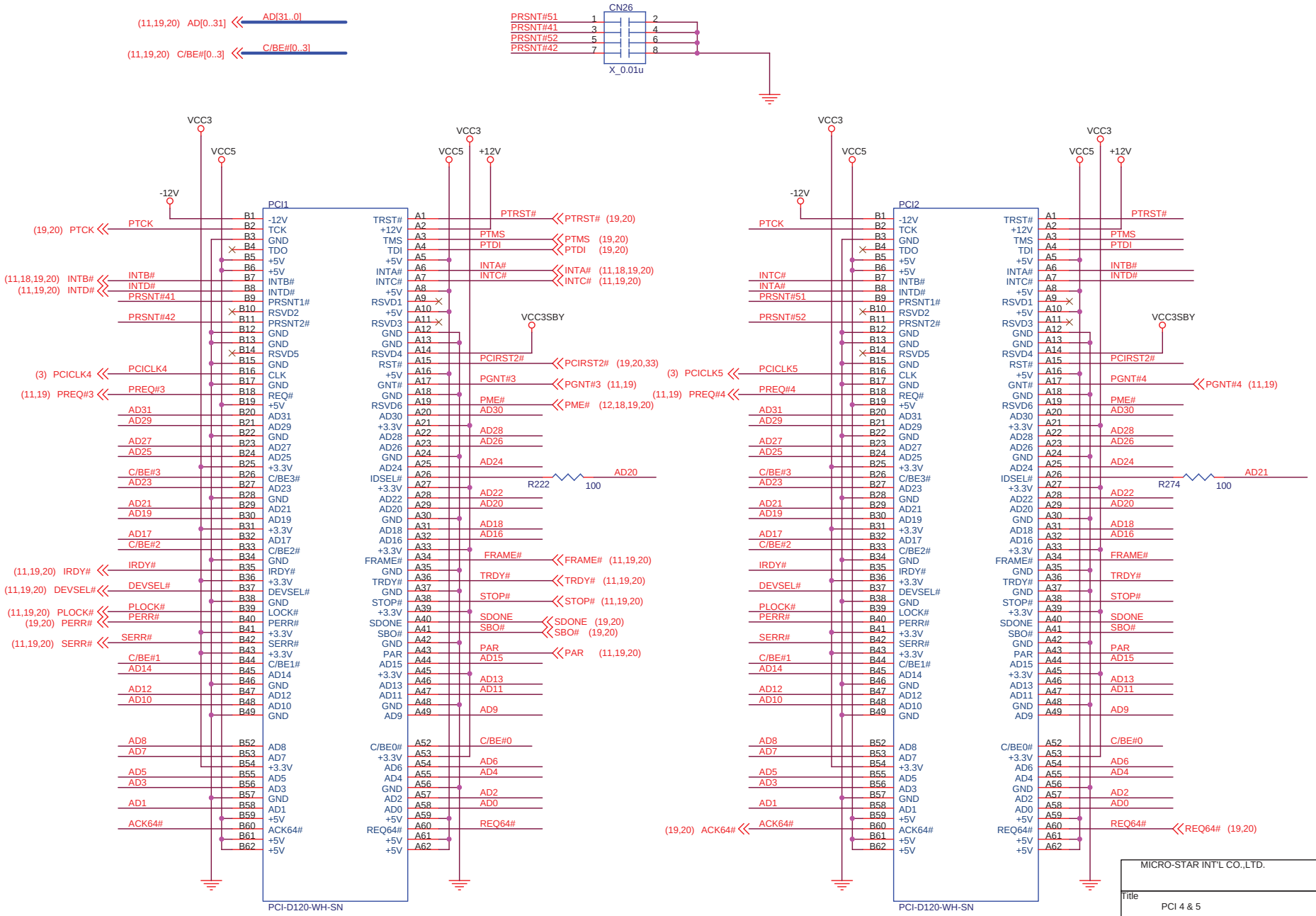

MICRO-STAR INT'L CO.,LTD.

Title	PCI 4 & 5		
Size B	Document Number MS-6717		Rev 0B
Date: Monday, December 23, 2002		Sheet 21 of 36	

RTL8201

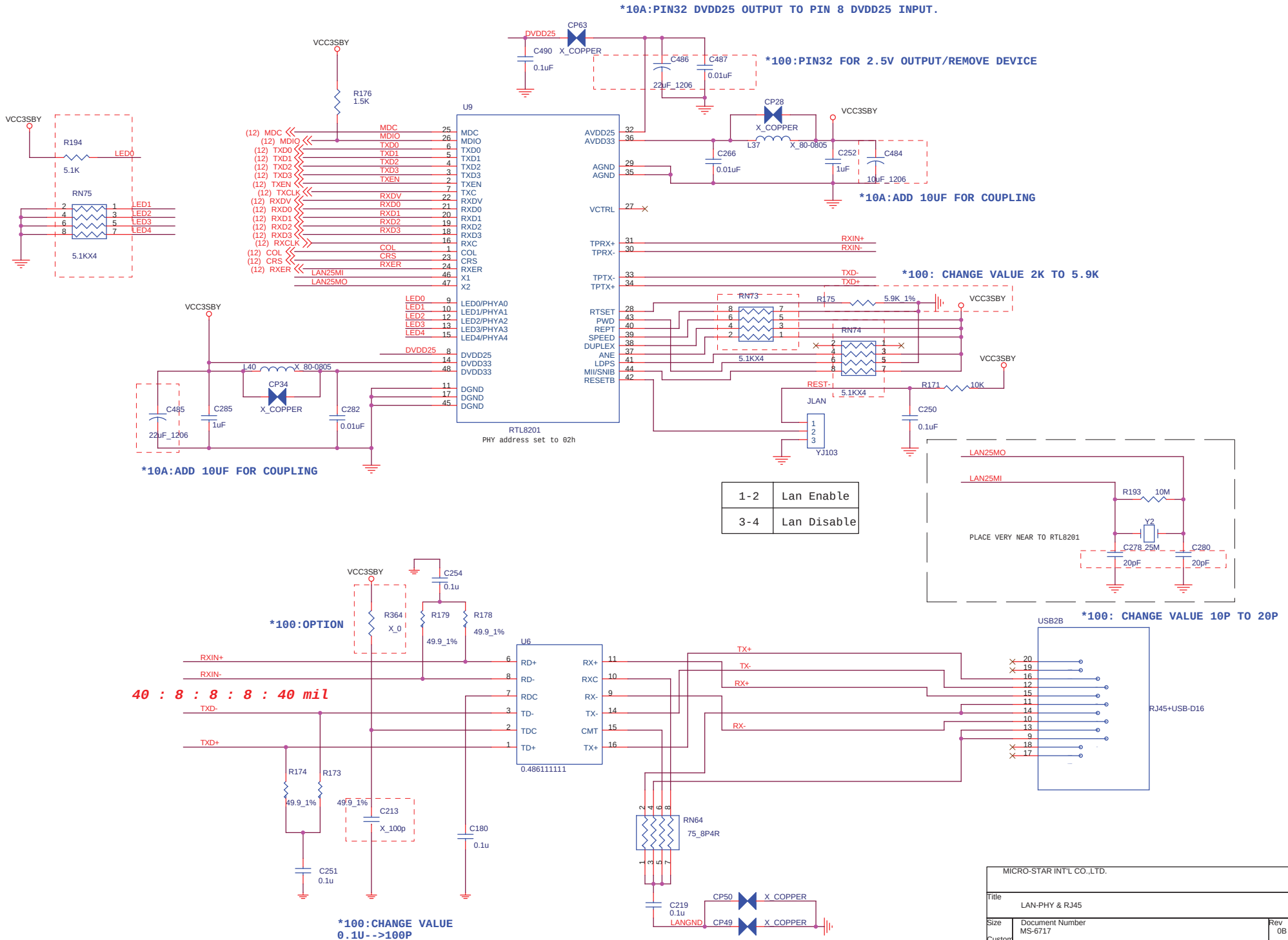

1-2	Lan Enable
3-4	Lan Disable

MICRO-STAR INT'L CO.,LTD.

Title: LAN-PHY & RJ45

Size: Custom | Document Number: MS-6717 | Rev: 0B

Date: Monday, December 23, 2002 | Sheet 22 of 36

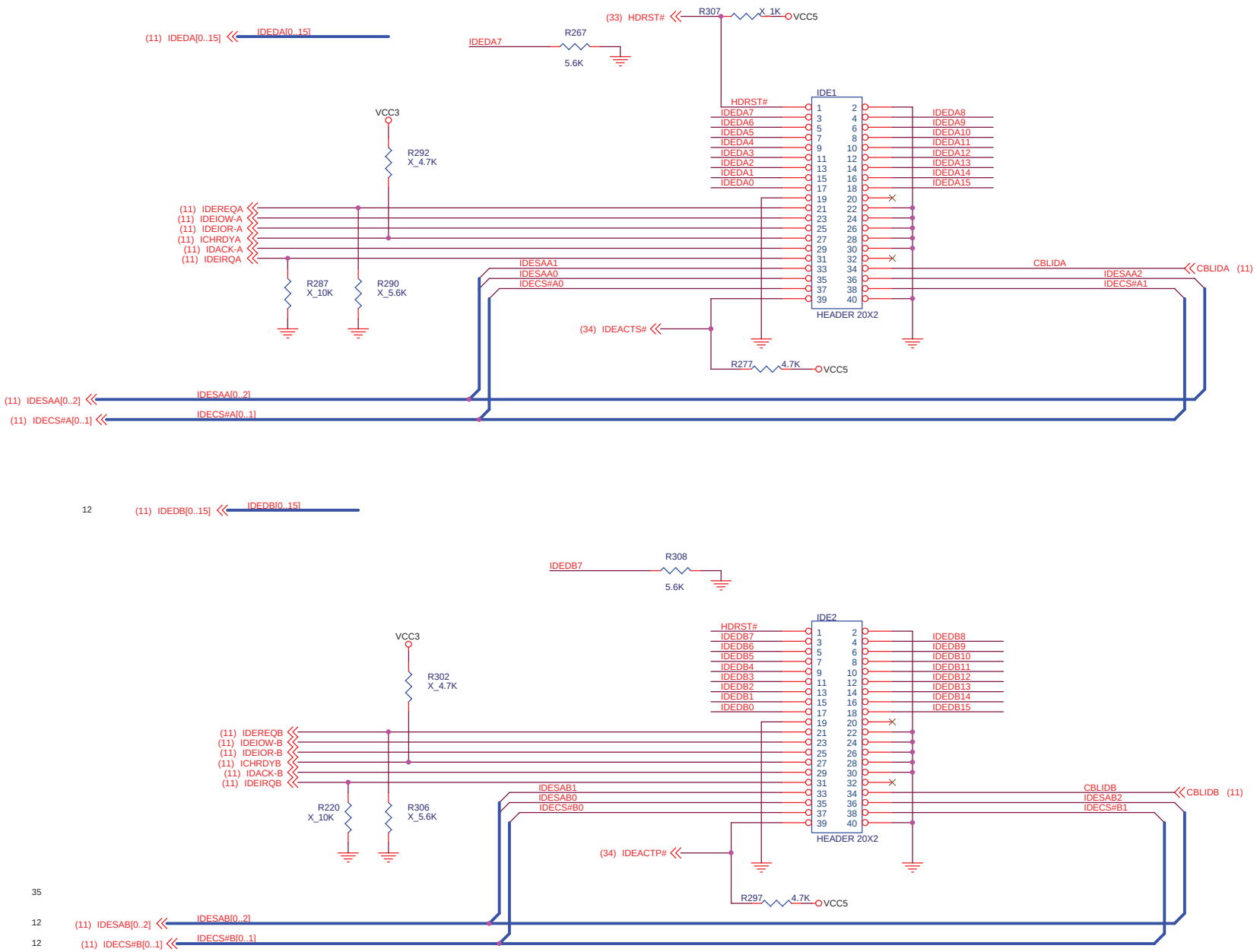

MICRO-STAR INT'L CO.,LTD.			
Title IDE CONNECTOR			
Size Custom	Document Number MS-6717		Rev 0B
Date: Monday, December 23, 2002	Sheet 23 of 36		

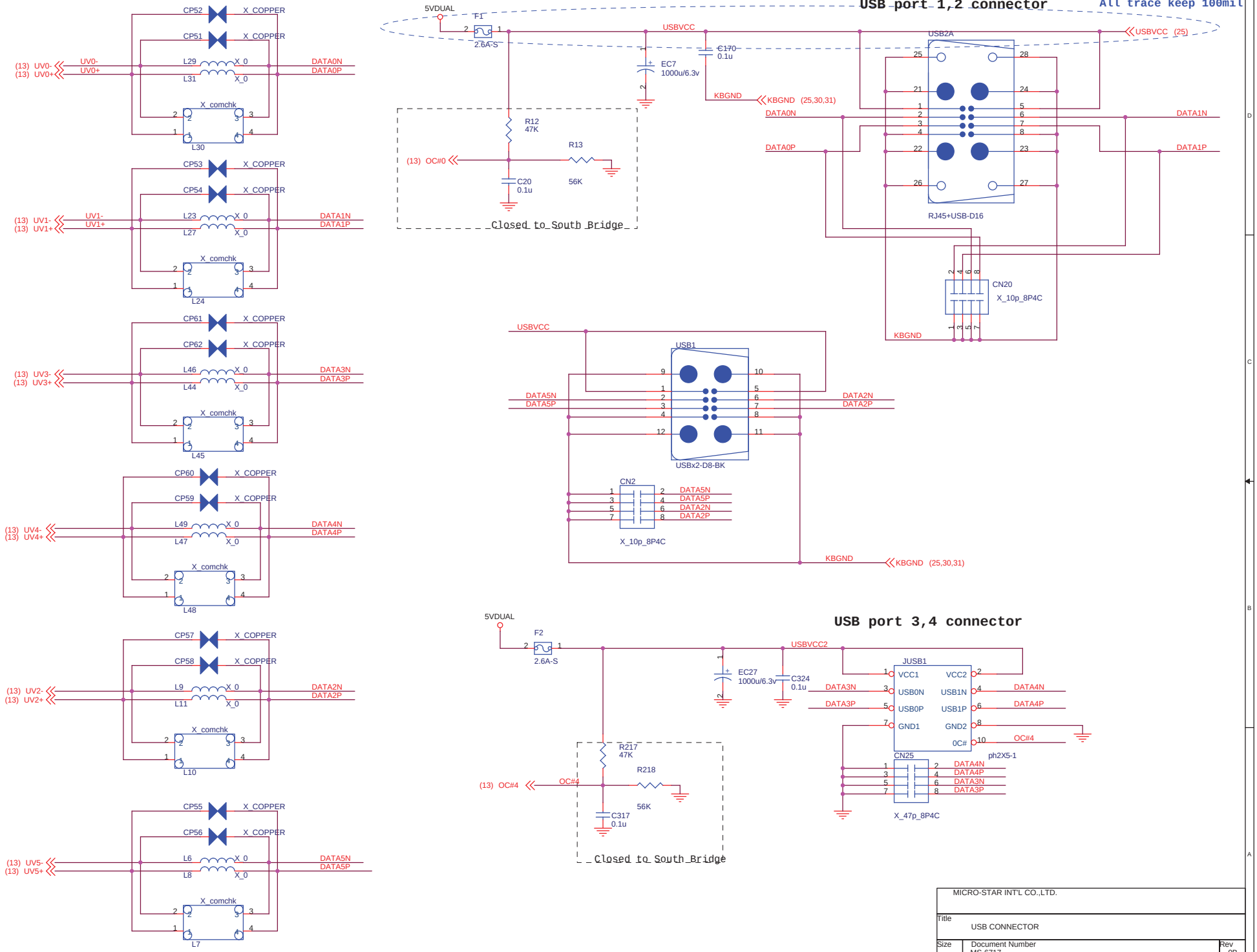

MICRO-STAR INT'L CO.,LTD.		
Title: USB CONNECTOR		
Size: Custom	Document Number: MS-6717	Rev: 0B
Date: Monday, December 23, 2002	Sheet 24 of 36	

FOXCONN
VENDOR PART_NO UB1112C-L0
MSI PART_NO N58-16F0031-F02
CNT,I/o-conn/assembly,rj45+usb/16pin,DIP/F(rj45)/M(usb)/2.54(rj45)/2(usb),black,P-B/PBT

KEYBOARD/MOUSE PORTS

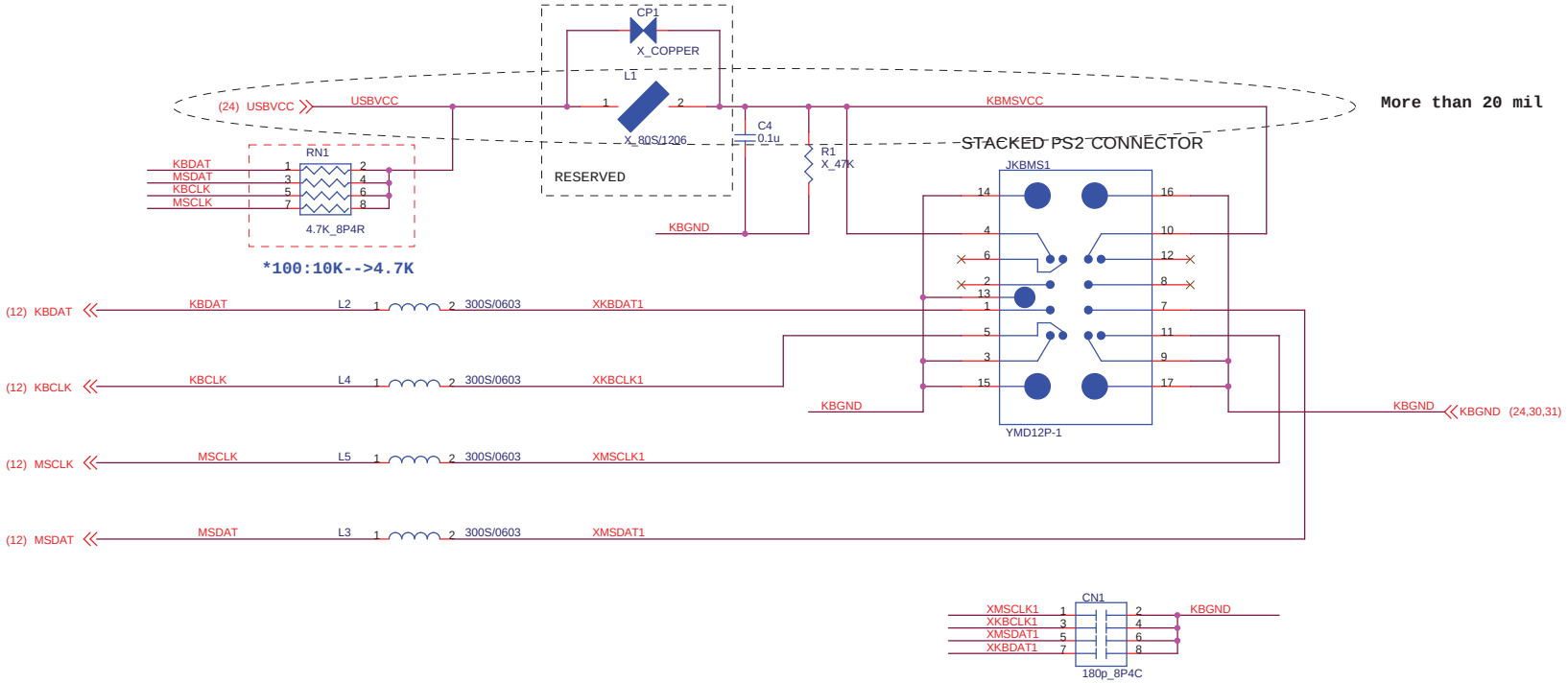

MICRO-STAR INT'L CO.,LTD.		
Title: KB/MS CONNECTOR		
Size: Custom	Document Number: MS-6717	Rev: 0B
Date: Tuesday, December 24, 2002	Sheet 25 of 36	

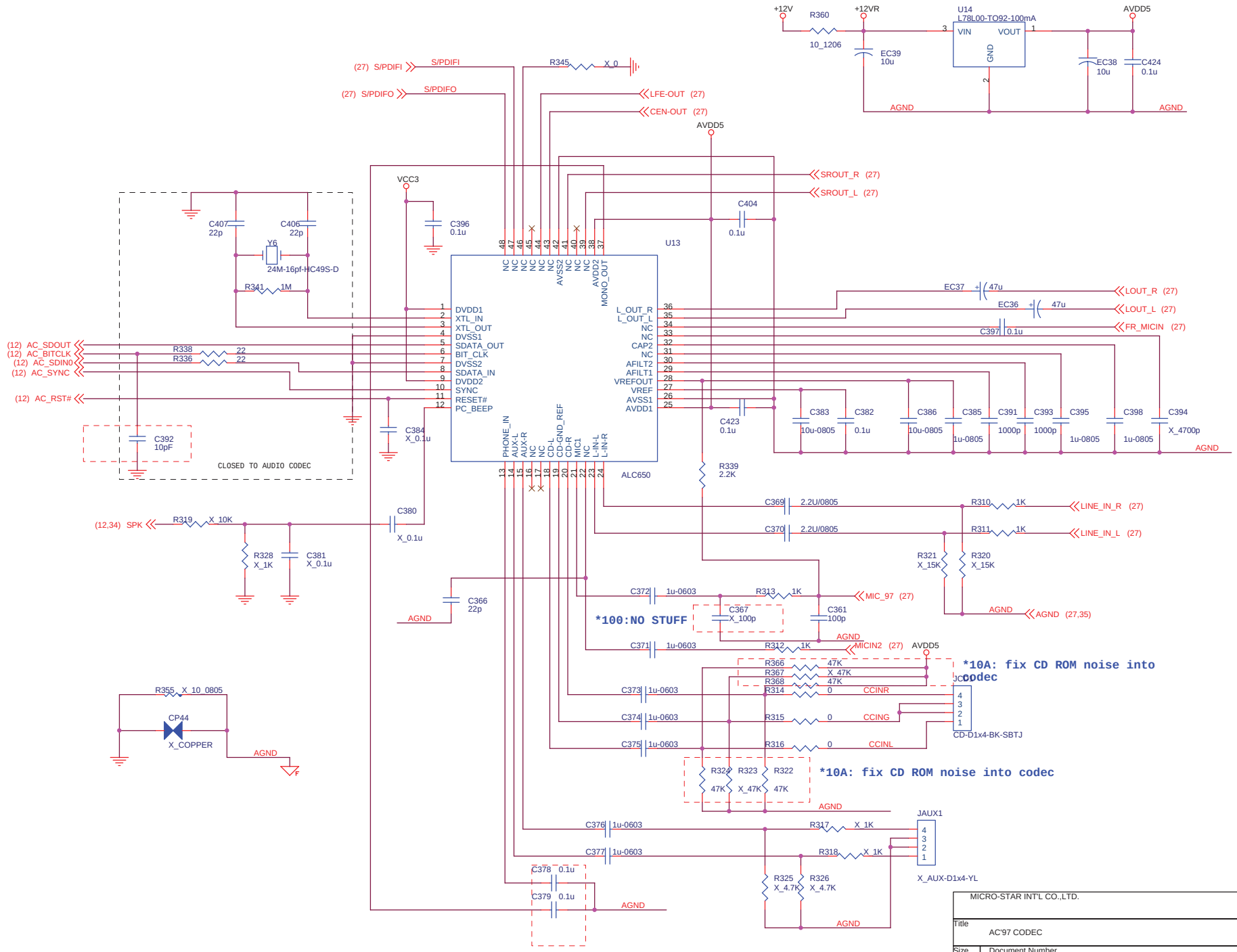

MICRO-STAR INT'L CO.,LTD.	
Title	AC'97 CODEC
Size: Custom	Document Number: MS-6717 — Rev: 0B
Date: Tuesday, December 24, 2002	Sheet 26 of 36

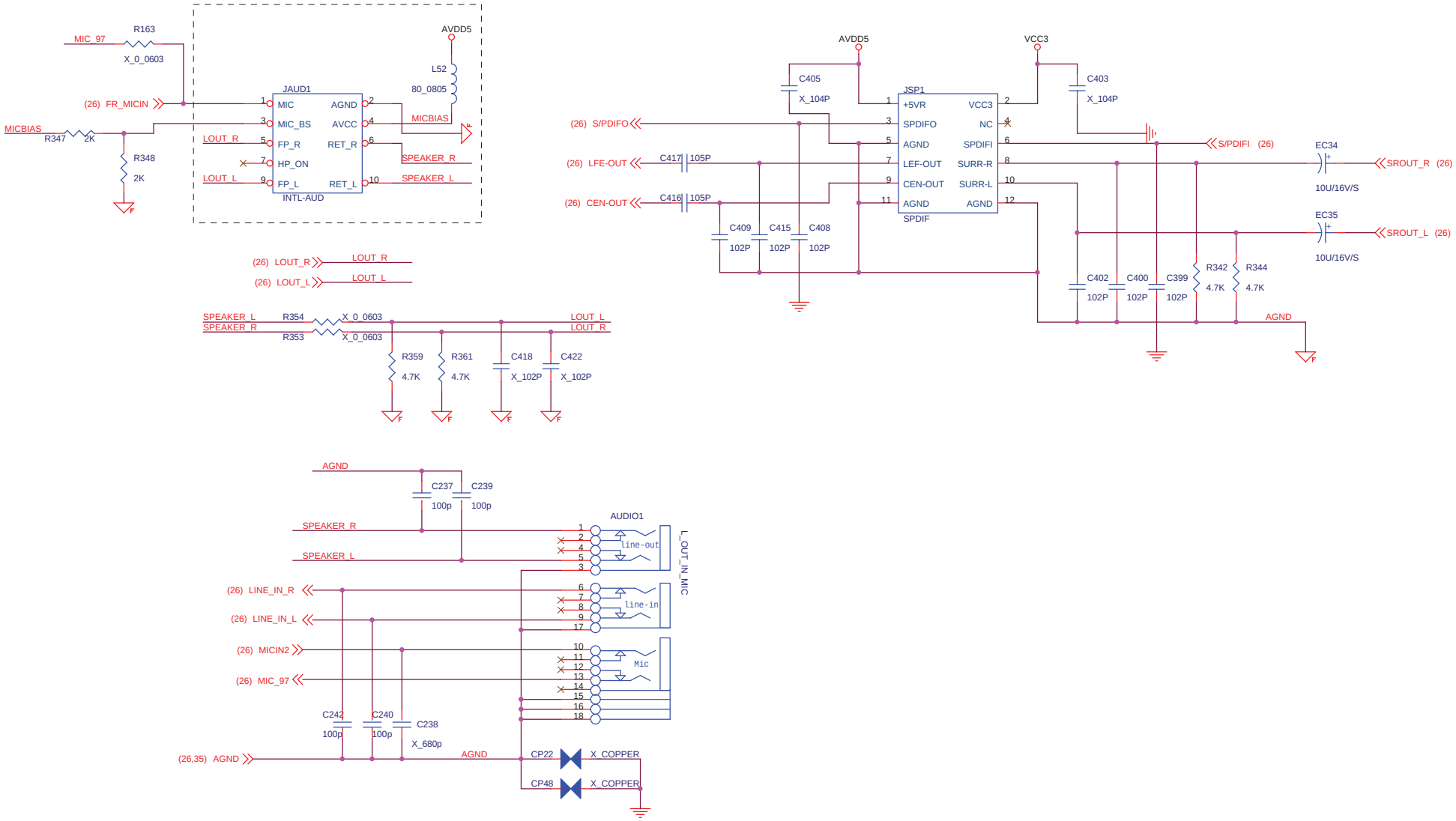

MICRO-STAR INT'L CO.,LTD.	
Title	AUDIO CONNECTOR
Size	Document Number MS-6717 — Rev 0B
Date: Monday, December 23, 2002	Sheet 27 of 36

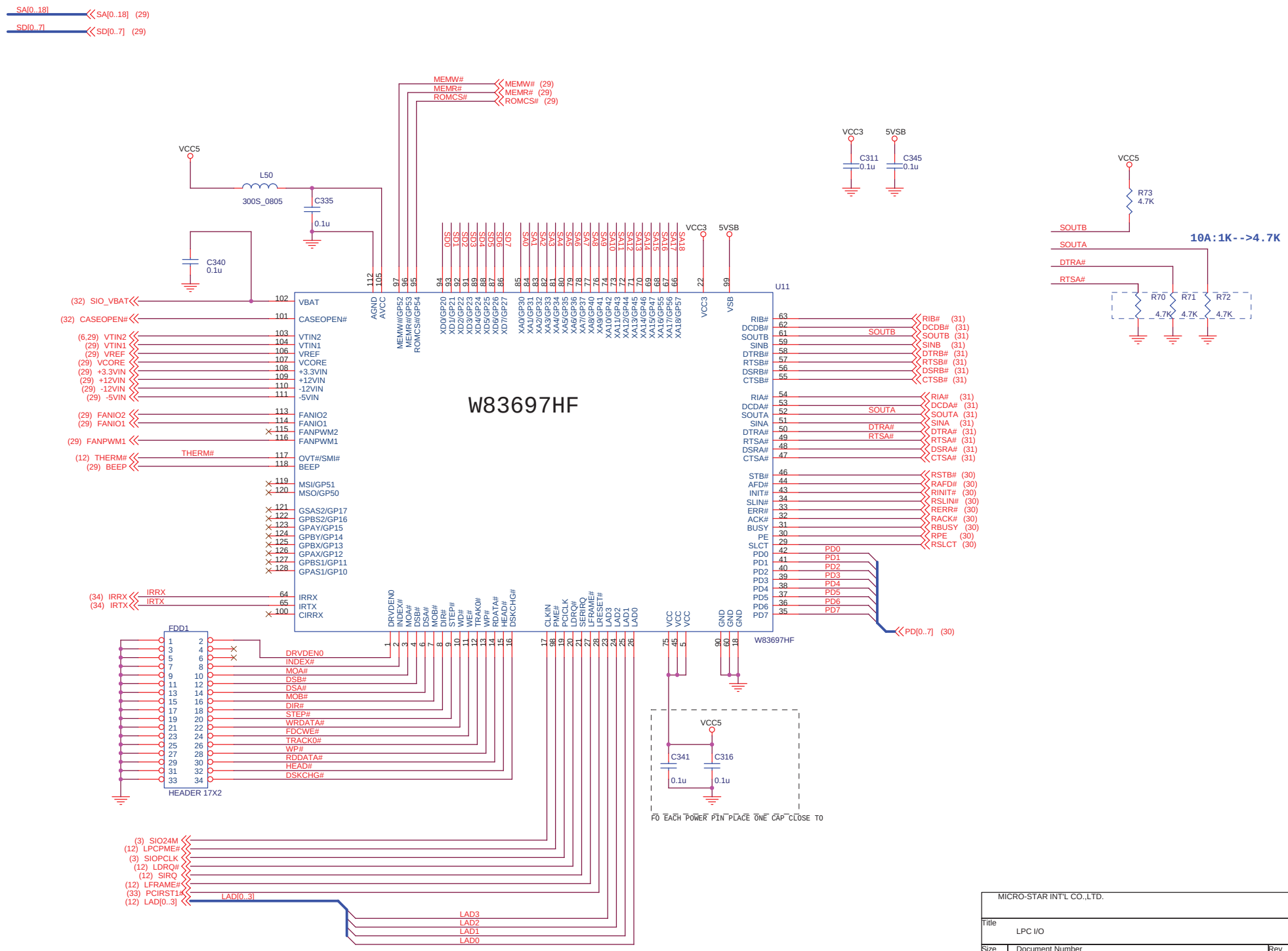

MICRO-STAR INT'L CO.,LTD.	
Title	LPC I/O
Size	Document Number MS-6717
Rev	0B
Custom	
Date: Monday, December 23, 2002	Sheet 28 of 36

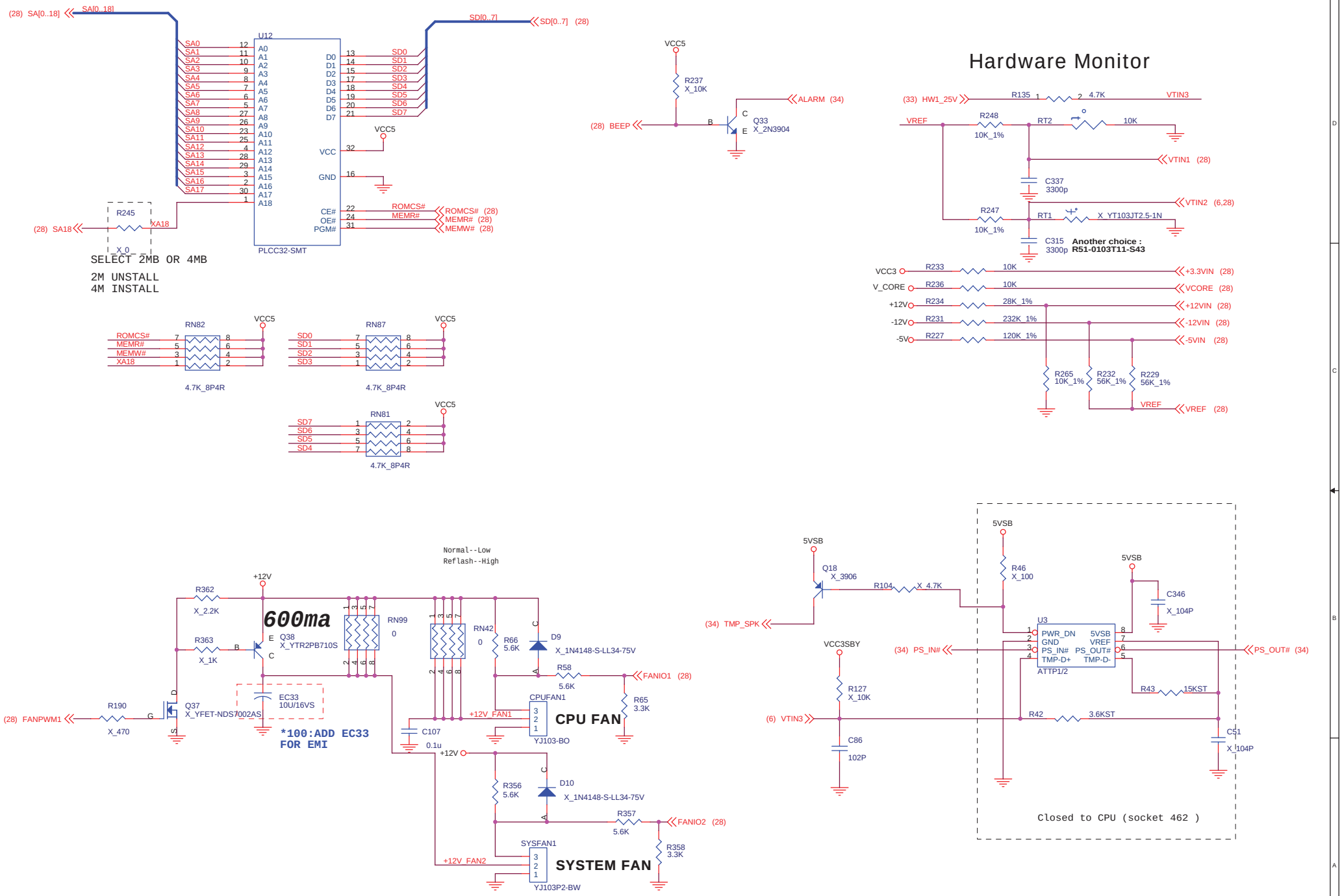

MICRO-STAR INT'L CO.,LTD.	
Title	FLASHROM & HW MONITOR
Size: Custom	Document Number: MS-6717 — Rev: 0B
Date: Tuesday, December 24, 2002	Sheet 29 of 36

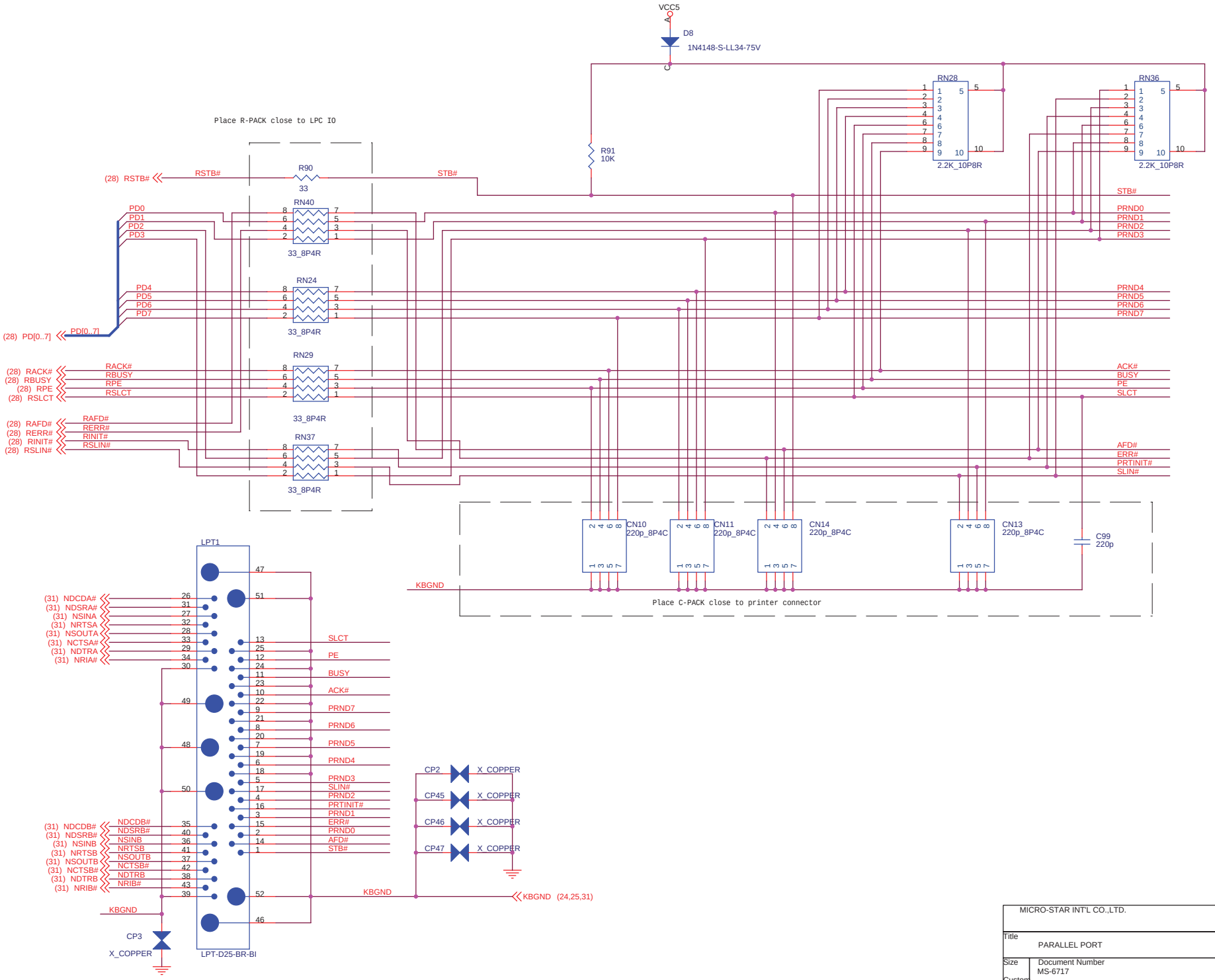

MICRO-STAR INT'L CO.,LTD.			
Title	PARALLEL PORT		
Size	Document Number MS-6717		Rev 0B
Custom			
Date: Monday, December 23, 2002	Sheet 30 of 36		

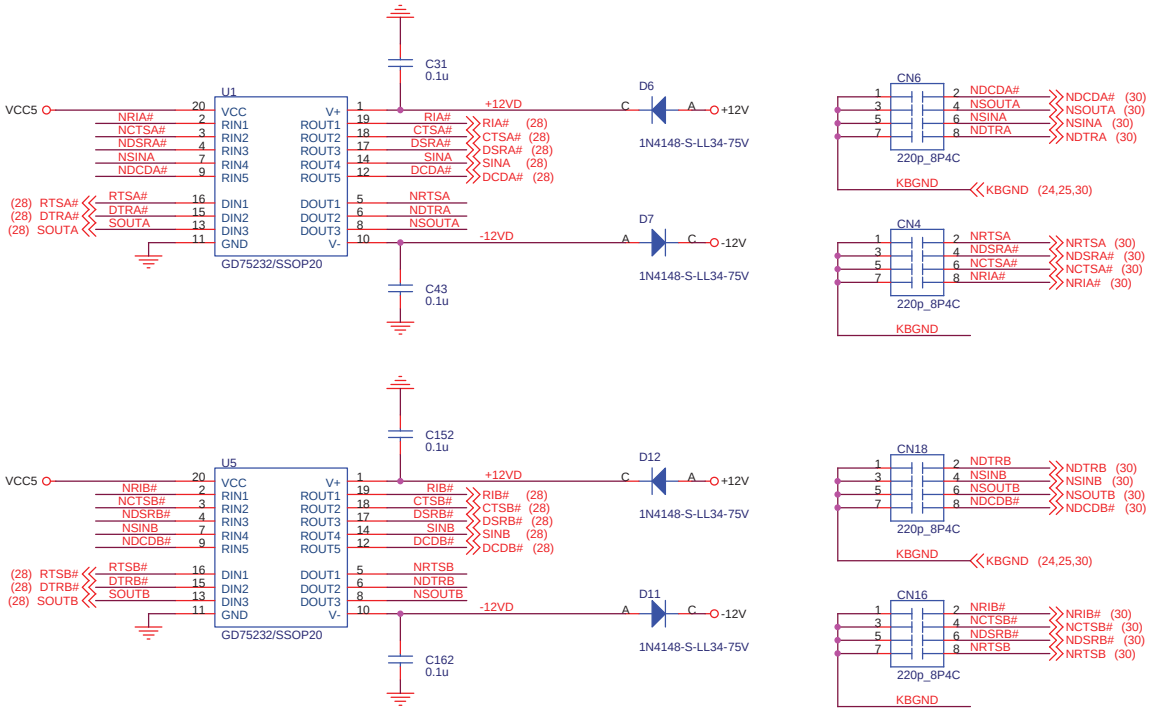

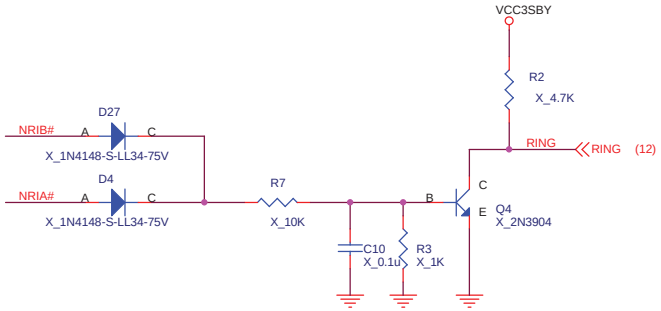

MICRO-STAR INT'L CO.,LTD.			
Title	SERIAL PORT		
Size	Document Number		Rev
Custom	MS-6717		0B
Date:	Monday, December 23, 2002	Sheet 31 of 36	

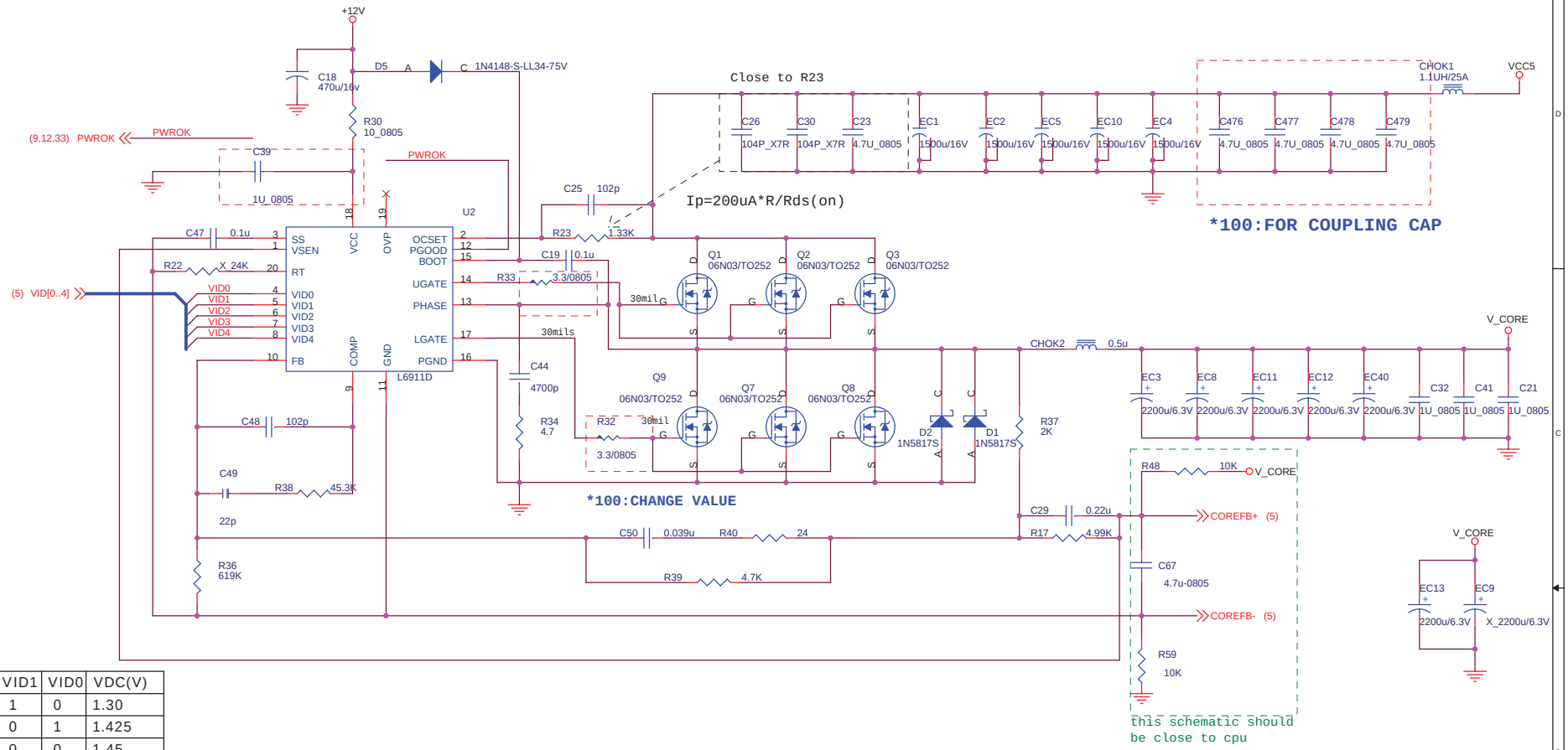

VID4	VID3	VID2	VID1	VID0	VDC(V)
1	0	1	1	0	1.30
1	0	0	0	1	1.425
1	0	0	0	0	1.45
0	1	1	1	1	1.475
0	1	1	1	0	1.500
0	1	1	0	1	1.525
0	1	1	0	0	1.550
0	1	0	1	1	1.575
0	1	0	1	0	1.600
0	1	0	0	1	1.625
0	1	0	0	0	1.650
0	0	1	1	1	1.675
0	0	1	1	0	1.70
0	0	1	0	1	1.725
0	0	1	0	0	1.75
0	0	0	1	1	1.775
0	0	0	1	0	1.80
0	0	0	0	1	1.825
0	0	0	0	0	1.85
1	1	1	1	1	NO CPU

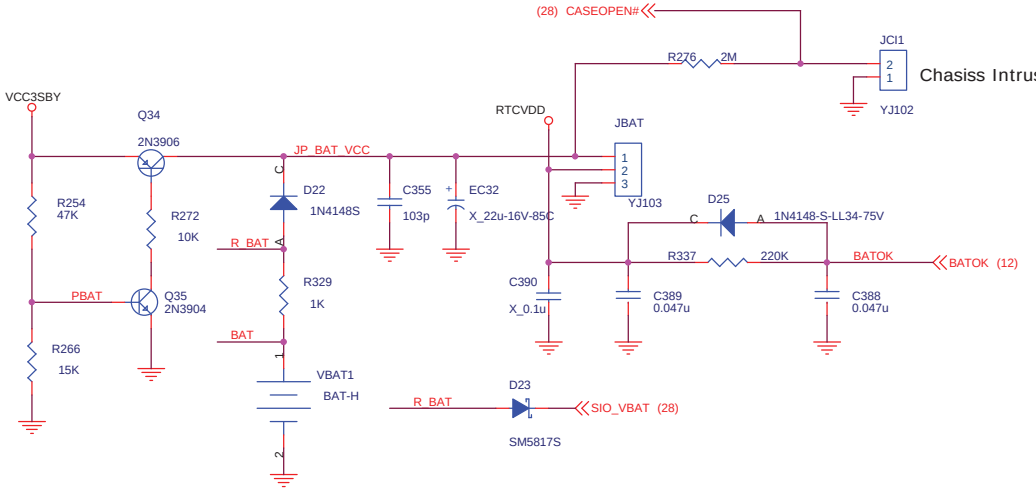

MICRO-STAR INT'L CO.,LTD.	
Title	PWM (VRM 9.0)
Size / Custom	Document Number MS-6717 — Rev 0B
Date: Monday, December 23, 2002	Sheet 32 of 36

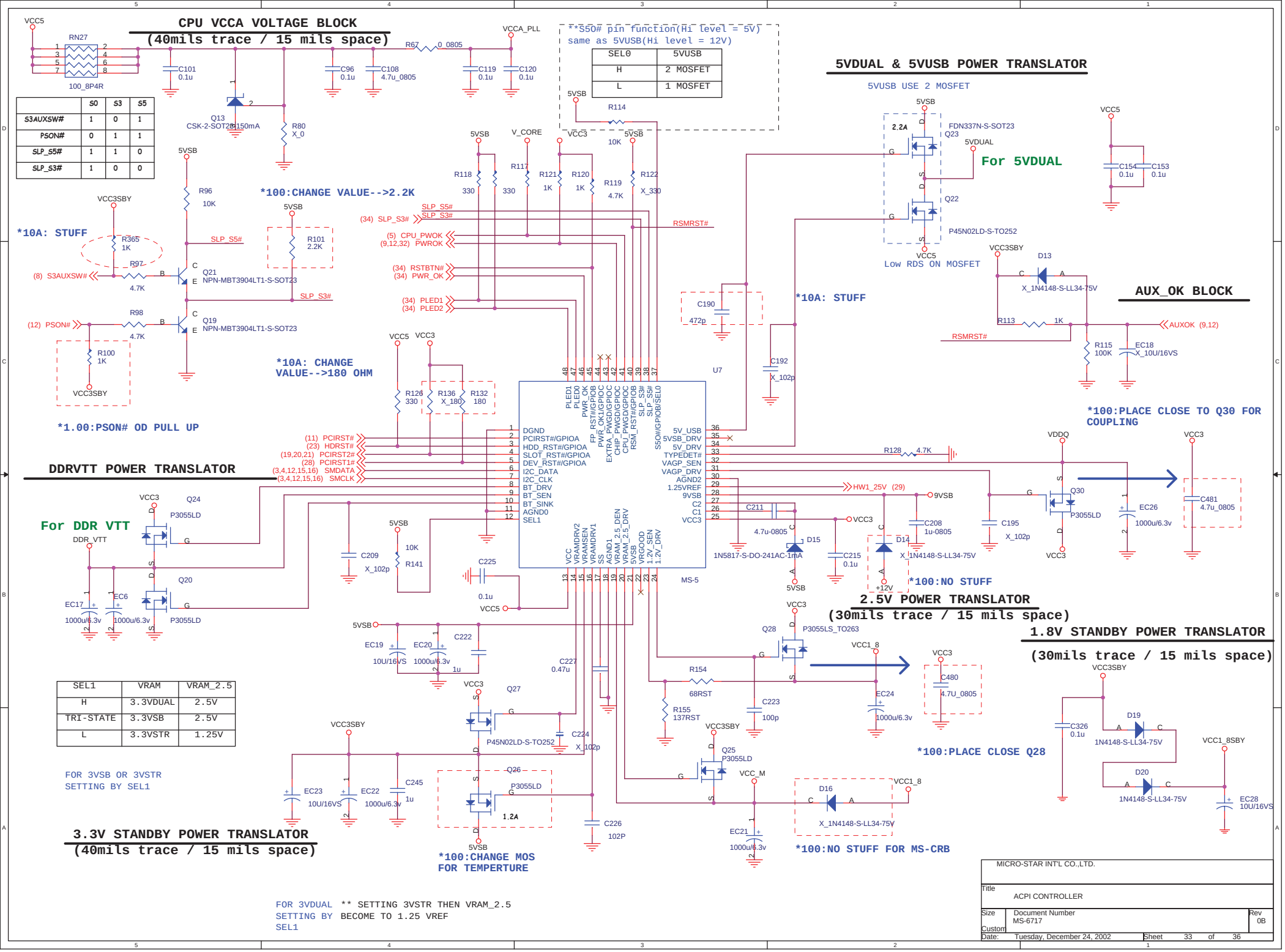
CPU VCCA VOLTAGE BLOCK
(40mils trace / 15 mils space)
**S50# pin function(Hi level = 5V)
same as 5VUSB(Hi level = 12V)
SEL0 | 5VUSB
H | 2 MOSFET
L | 1 MOSFET
5VDUAL & 5VUSB POWER TRANSLATOR
5VUSB USE 2 MOSFET
For 5VDUAL
Low RDS ON MOSFET
AUX_OK BLOCK
*10A: STUFF
*100:CHANGE VALUE-->2.2K
*10A: CHANGE VALUE-->180 OHM
*1.00:PSON# OD PULL UP
*100:PLACE CLOSE TO Q30 FOR COUPLING
DDRVTT POWER TRANSLATOR
For DDR VTT
2.5V POWER TRANSLATOR
(30mils trace / 15 mils space)
*100:NO STUFF
1.8V STANDBY POWER TRANSLATOR
(30mils trace / 15 mils space)
*100:PLACE CLOSE Q28
3.3V STANDBY POWER TRANSLATOR
(40mils trace / 15 mils space)
*100:CHANGE MOS FOR TEMPERTURE
*100:NO STUFF FOR MS-CRB
FOR 3VSB OR 3VSTR SETTING BY SEL1
FOR 3VDUAL SETTING BY SEL1 ** SETTING 3VSTR THEN VRAM_2.5 BECOME TO 1.25 VREF
MICRO-STAR INT'L CO.,LTD.
Title ACPI CONTROLLER
Size Custom
Document Number MS-6717
Rev 0B
Date: Tuesday, December 24, 2002
Sheet 33 of 36

INTEL / MSI CONN

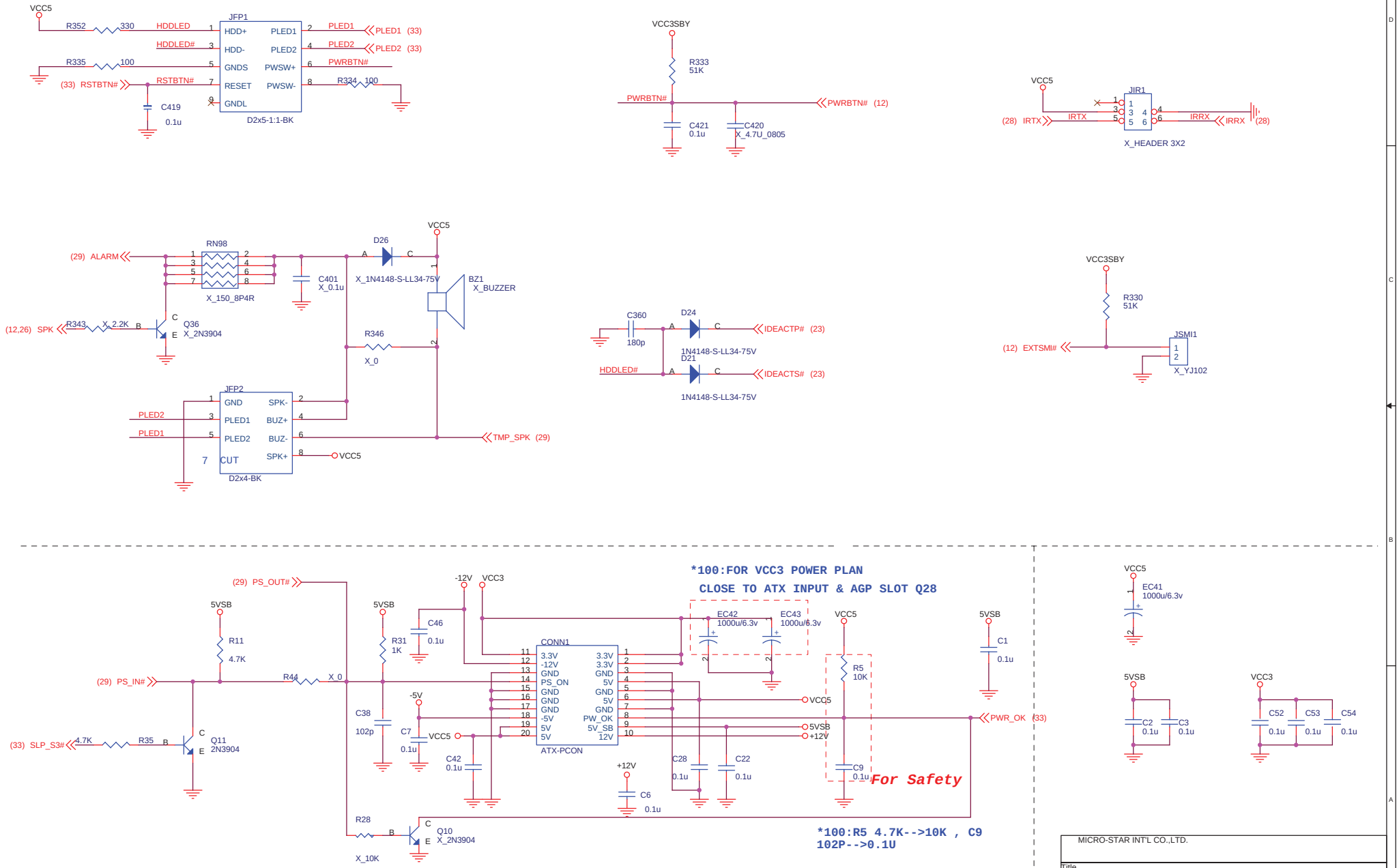

MICRO-STAR INT'L CO.,LTD.		
Title	FRONT PANNEL/ATX CONN	
Size: Custom	Document Number MS-6717	Rev 0B
Date: Monday, December 23, 2002	Sheet 34 of 36	

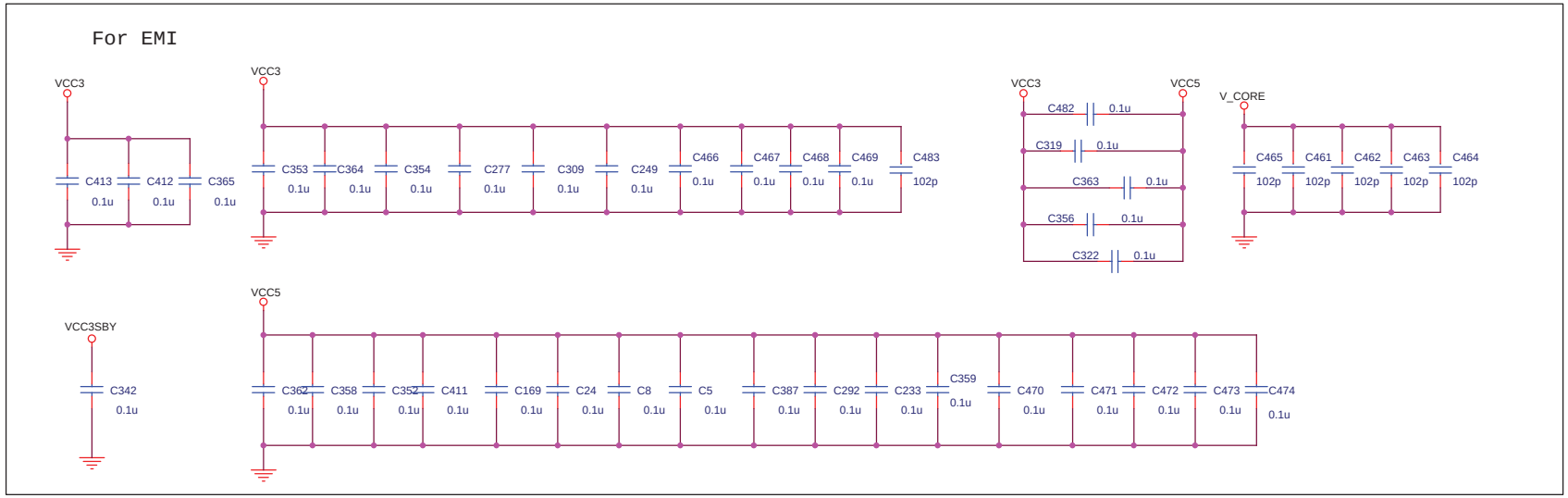

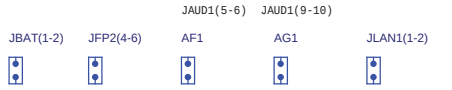

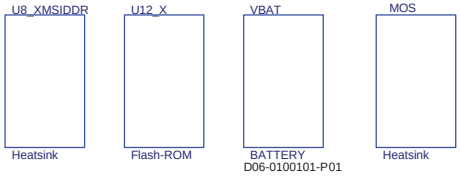

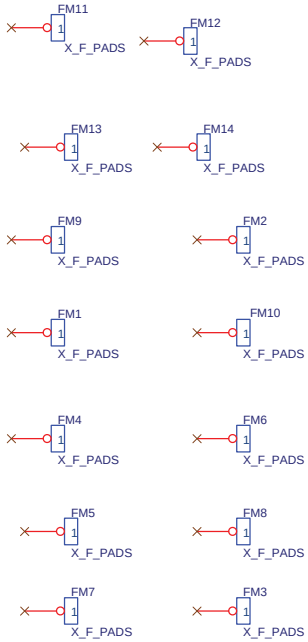

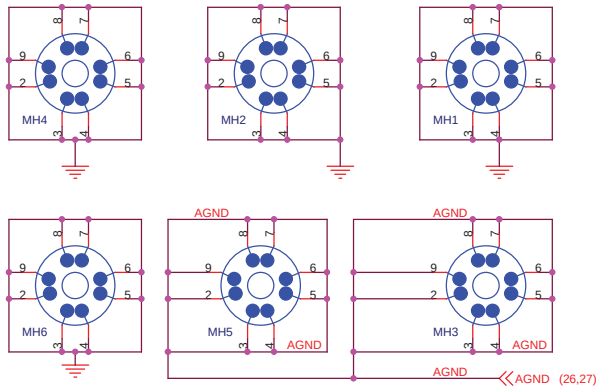

High Freq. return current decoupling

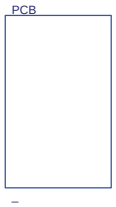

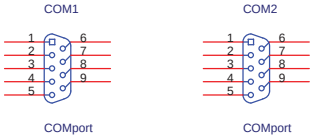

MICRO-STAR INT'L CO.,LTD.		
Title: SREW / MENU		
Size: Custom	Document Number: MS-6717	Rev: 0B
Date: Tuesday, December 24, 2002	Sheet 35 of 36	

11/11	**V.100**
PAGE3	*.R147,148 CHANGE VALUE 10 OHM TO 33. *.C198,199 -->15P *.ADD R4 10K
PAGE4	*.C151-->NO STUFF
PAGE5	*.R19 CHANGE VALUE 40.2 OHM TO 56.2 OHM
PAGE6 PAGE9	*.C102-->NO STUFF *.C265,C263CHANGE VALUE-->0.1U
PAGE12 PAGE13	*.C343-->NO STUFF *.C325,C344 20P-->15P *.R224,R225,R238,R239,R240,R242,R243 33OHM-->0OHM *.R10-->NO STUFF *.U6 PIN2 ADD R364 NO STUFF
PAGE22	*.R175 CHANGE VALUE 2K TO 5.9K *.ADD C484,C485 10UF FOR 3VSBY *.C213 0.1UF-->100P *.R190,R202 22ohm-->0ohm *.RN73,RN74,RN75,R194 1K-->5.1K *.C253,D17,R177,C213 NO STUFF *.C278,C280 10P-->20P
PAGE25	*.RN1 10K-->4.7K
PAGE26	*.SPEAK FUNCTION REMOVE,C380,C381,R328,R319,R343,Q36,RN98,Q33,R237-->NO STUFF *.C367-->NO STUFF *.C378,C379-->0.1U
PAGE32	*.ADD 4.7UF*4 IN VCORE PLAN C476-C479 *.R32,R33 CAHNGE VALUE-->33 OHM
PAGE33	*.ADD 4.7UF C480 IN VCC3 PLAN CLOSE TO Q28 *.D14-->NO STUFF *.R101-->2.2K *.CHANGE MOS Q26 NDS351AN-S-SOT23-->PD3055LD *.ADD C481 4.7UF
PAGE34	*.ADD EC42,43 1000UF*2 IN VCC3 PLAN CLOSE TO AGP SLOT *.R5 4.7K-->10K , C9 102P-->0.1U
PAGE19	*.ADD EC25 FOR EMI
PAGE29	*.ADD EC33 FOR EMI
	V.10A
PAGE3 PAGE18	*.R149,150 CHANGE VALUE 22 OHM TO 33. *.C204,205 -->15P *.ADD C475 0.1U to 1U *.ADD C488-->4.7U,C489--> 0.01U
PAGE22 PAGE26	*.U9 PIN32 2.5V OUT CONNECT TO PIN8 *.ADD R366 , R367 , R368 TO FIXED CD ROM NOISE. *.R322, R323 , R324 4.7K-->47K *.FIX MIC_IN NOISE ISSUE.
PAGE33	*.ADD R365 1K PULL UP (S3AUX# OD) *.C190 472P STUFF
PAGE13	*.RN78,RN79,R223,R266 NO STUFF
	*.Audio codec Realtek change version to F *.SIO change version *.NB change version 746-->A2 , SB-->963L C1 *.AGP 3.0 slot -->red color *.DDR slot -->green color *.TXT print -->746F Ultra *.Solder side CAP no stuff

Title	{Title}	
Size B	Document Number {Doc}	Rev {RevCode}
Date: Tuesday, December 17, 2002	Sheet 36 of 36	