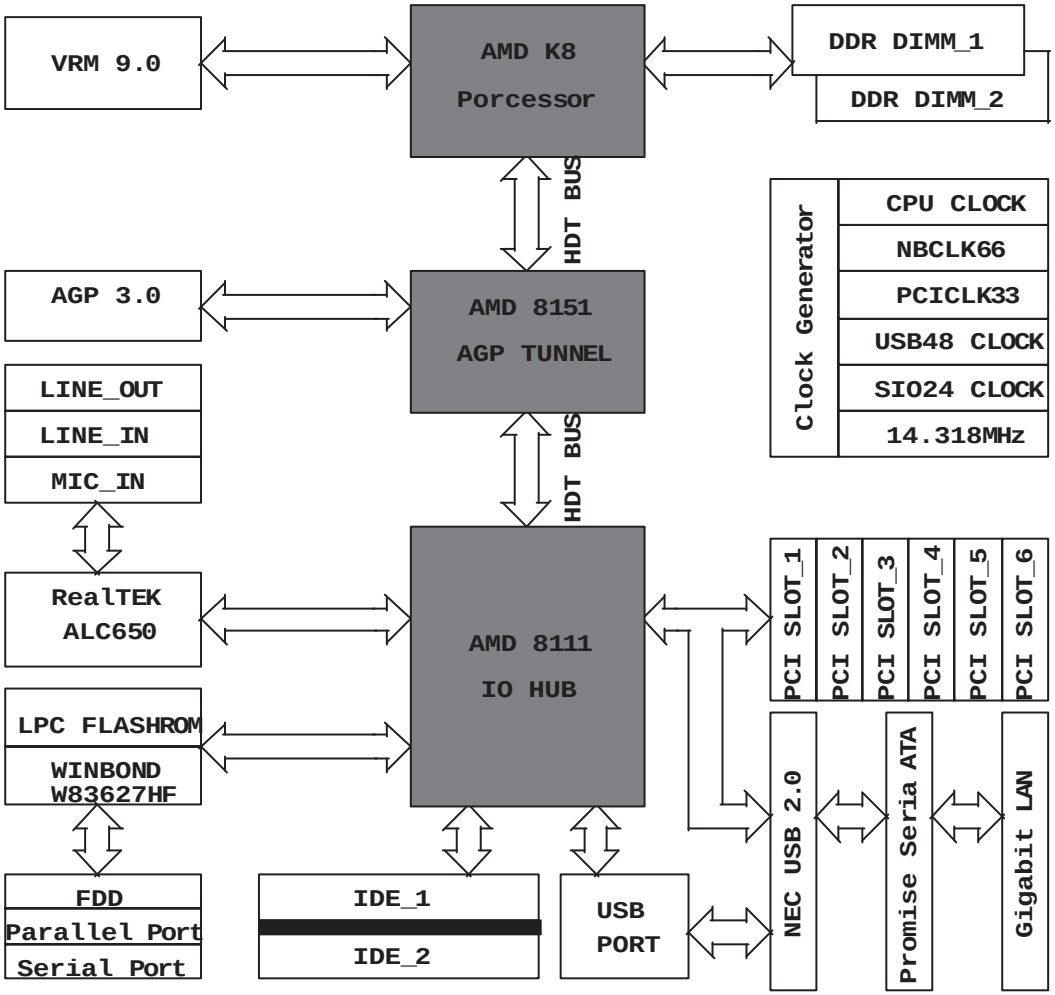

MS-6713 Version: 0A

01-Block Drigarm
02-Power Div & Specification
03-AMD K8 Core power
04-Clock Generator
05-Hyper Transport Link_0 Part_1
06-Hyper Transport Link_0 Part_2
07-Memory damping & Keyboard/Mouse
08-DDR DIMM_1 & DIMM_2
09-DDR DIMM Terminator
10-Hyper Transport Link_1 Part_1
11-Hyper Transport Link_1 Part_2 AGP SLOT
12-Hyper Transport IO_HUB Part_1
13-Hyper Transport IO_HUB Part_2
14-Hyper Transport IO_HUB Part_3 USB Port
15-LPC Flashrom & MS_1
16-IDE Connector
17-PCI Slot_1 & 2
18-PCI Slot_3 & 4
19-PCI Slot_5 & 6
20-RealTEK ALC650 AC97 Codec
21-NEC USB20 Controller
22-Gigabit LAN Controller
24-Serial ATA Controller
25-W83627HF SIO & H/W Monitor
26-Parallel & Serial Port
27-System Power Part_1
28-System Power Part_2
29-ATX Power & Front Panel

Title	MS-6713	
Size	Document Number {Doc}	Rev 0A
Date: Monday, July 15, 2002	Sheet 1 of 30	

Specification description:

Processor: AMD K8

System chupset: AMD 8151 + AMD 8111

System power: Inter_sil ISL6569CB

Clock generator: Cypress CY28311

Super IO: Winbond W83627HF

Flash Rom: LPC interface

On board AGP slot: 1

On board PCI slot: 6

On board Gigabit LAN: 1

On board USB_20: 1

On board serial ATA & Raid: 1

System Audio: RealTEK ALC650 AC97 Codec

PCI routing table:

PCI slot_1	AD16 PIRQ#A	PIRQ#B	PIRQ#C	PIRQ#D
PCI slot_2	AD17 PIRQ#B	PIRQ#C	PIRQ#D	PIRQ#A
PCI slot_3	AD18 PIRQ#D	PIRQ#A	PIRQ#B	PIRQ#C
PCI slot_4	AD19 PIRQ#D	PIRQ#A	PIRQ#B	PIRQ#C
PCI slot_5	AD20 PIRQ#A	PIRQ#B	PIRQ#C	PIRQ#D
PCI slot_6	AD21 PIRQ#B	PIRQ#C	PIRQ#D	PIRQ#A
PCI LAN	AD24 PIRQ#D			
USB_20	AD23 PIRQ#A	PIRQ#B	PIRQ#C	
Serial ATA	AD22 PIRQ#C			

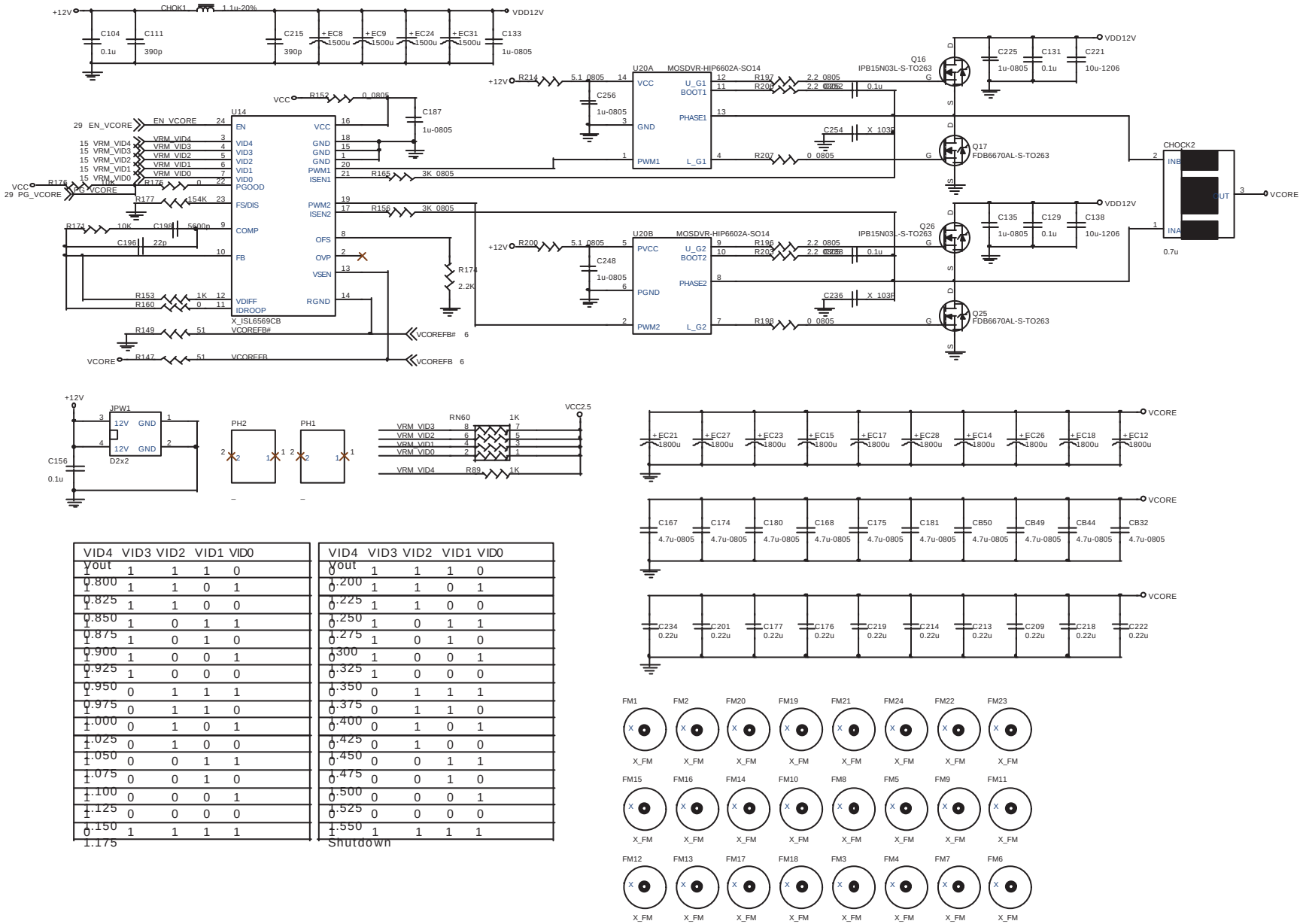

VID4	VID3	VID2	VID1	VID0	Vout
1	1	1	1	0	0.800
1	1	1	0	1	0.825
1	1	1	0	0	0.850
1	1	0	1	1	0.875
1	1	0	1	0	0.900
1	1	0	0	1	0.925
1	1	0	0	0	0.950
1	0	1	1	1	0.975
1	0	1	1	0	1.000
1	0	1	0	1	1.025
1	0	1	0	0	1.050
1	0	0	1	1	1.075
1	0	0	1	0	1.100
1	0	0	0	1	1.125
1	0	0	0	0	1.150
0	1	1	1	1	1.175

VID4	VID3	VID2	VID1	VID0	Vout
0	1	1	1	0	1.200
0	1	1	0	1	1.225
0	1	1	0	0	1.250
0	1	0	1	1	1.275
0	1	0	1	0	1.300
0	1	0	0	1	1.325
0	1	0	0	0	1.350
0	0	1	1	1	1.375
0	0	1	1	0	1.400
0	0	1	0	1	1.425
0	0	1	0	0	1.450
0	0	0	1	1	1.475
0	0	0	1	0	1.500
0	0	0	0	1	1.525
0	0	0	0	0	1.550
1	1	1	1	1	Shutdown

Title
MS-6713

Size	Document Number	Rev
	{Doc}	0A

Date: Friday, August 16, 2002 Sheet 3 of 30

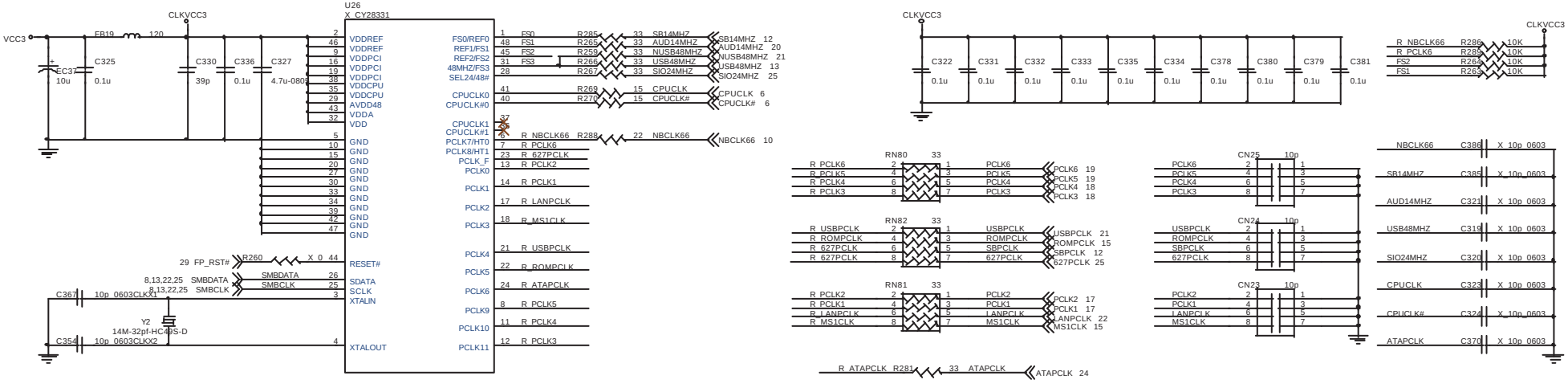

Title	MS-6713	
Size	Document Number {Doc}	Rev 0A
Date: Friday, August 16, 2002	Sheet 4 of 30	

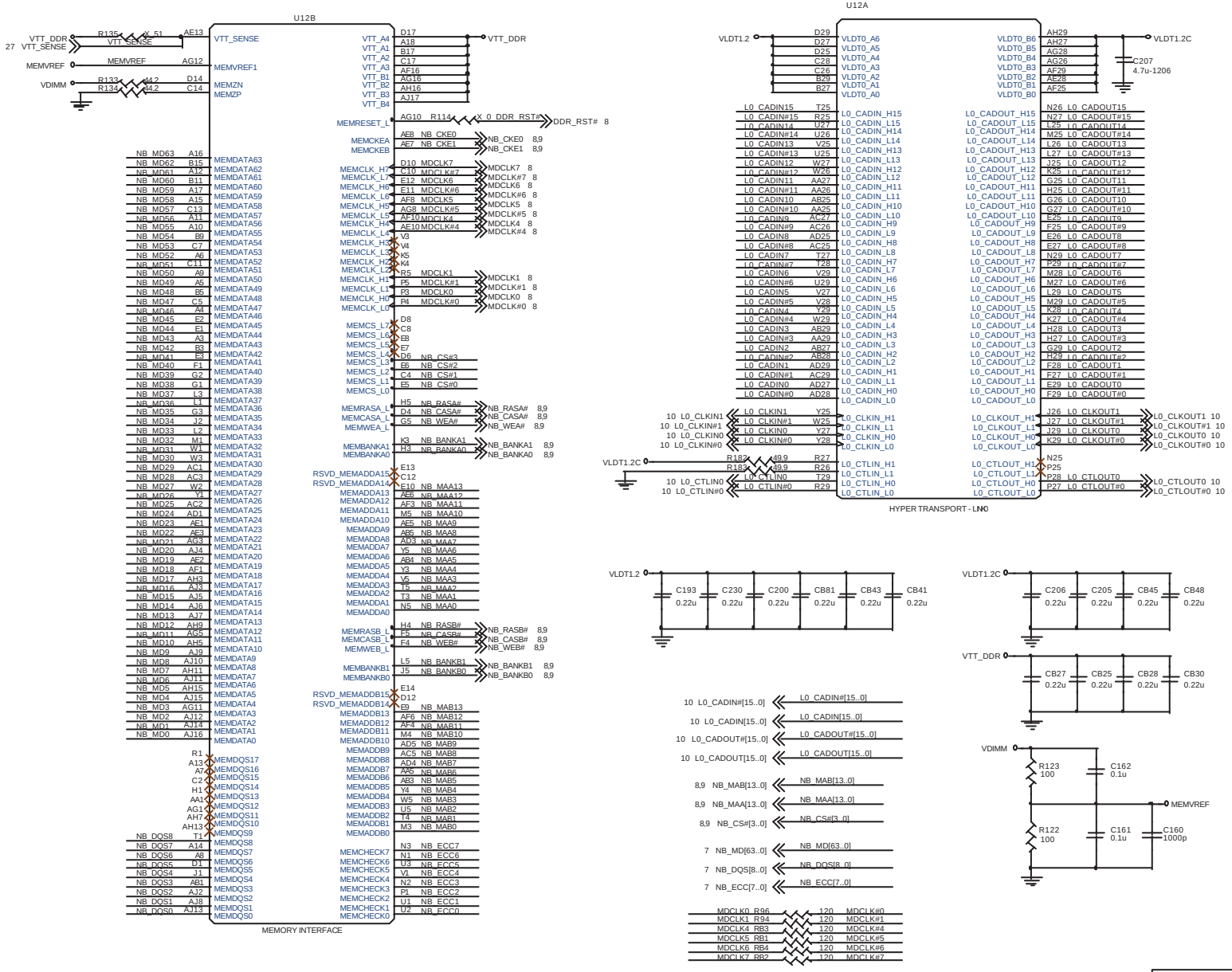

Title
MS-6713

Size	Document Number	Rev
	{Doc}	0A

Date: Friday, August 16, 2002 Sheet 5 of 30

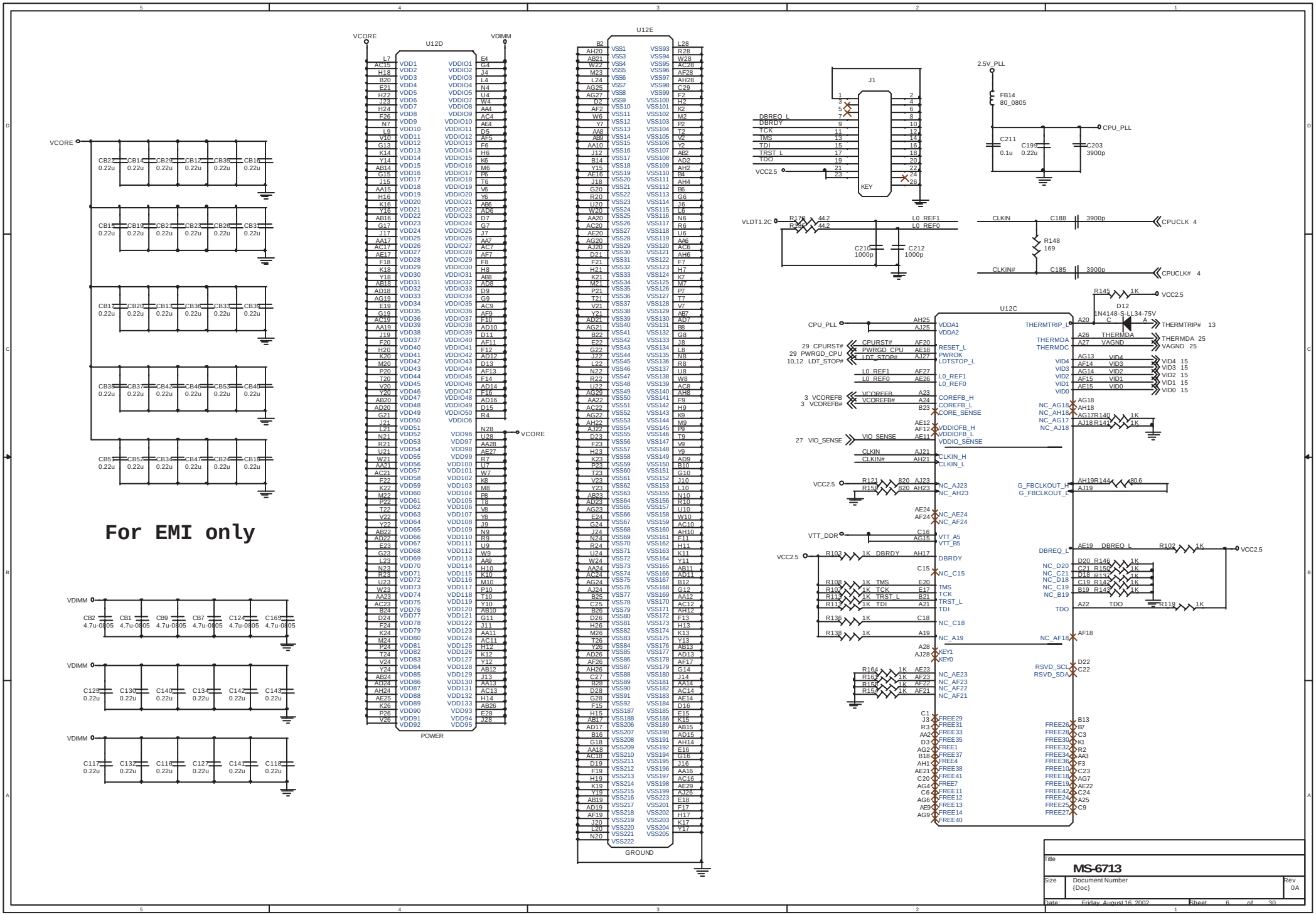

For EMI only
U12D
POWER
U12E
GROUND
U12C
J1
KEY
VCORE
VDIMM
VCC2.5
2.5V_PLL
CPU_PLL
VLDT1.2C
CLKIN
CLKIN#
CPUCLK 4
CPUCLK# 4
THERMTRIP_L
THERMTRIP# 13
THERMDA 25
VAGND 25
VID4 15
VID3 15
VID2 15
VID1 15
VID0 15
VIO_SENSE
VTT_DDR
DBREQ_L
DBRDY
TCK
TMS
TDI
TRST_L
TDO
CPURST#
PWRGD_CPU
LDT_STOP#
VCOREFB
VCOREFB#
CORE_SENSE
CLKIN_H
CLKIN_L
G_FBCLKOUT_H
G_FBCLKOUT_L
RSVD_SCL
RSVD_SDA
Title
MS-6713
Size
Document Number
{Doc}
Rev
0A
Date: Friday, August 16, 2002
Sheet 6 of 30

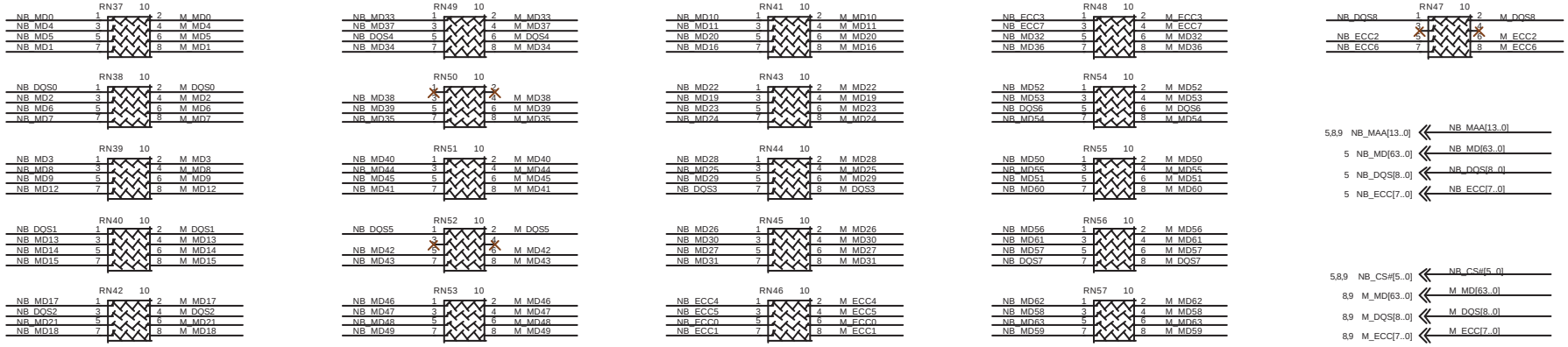

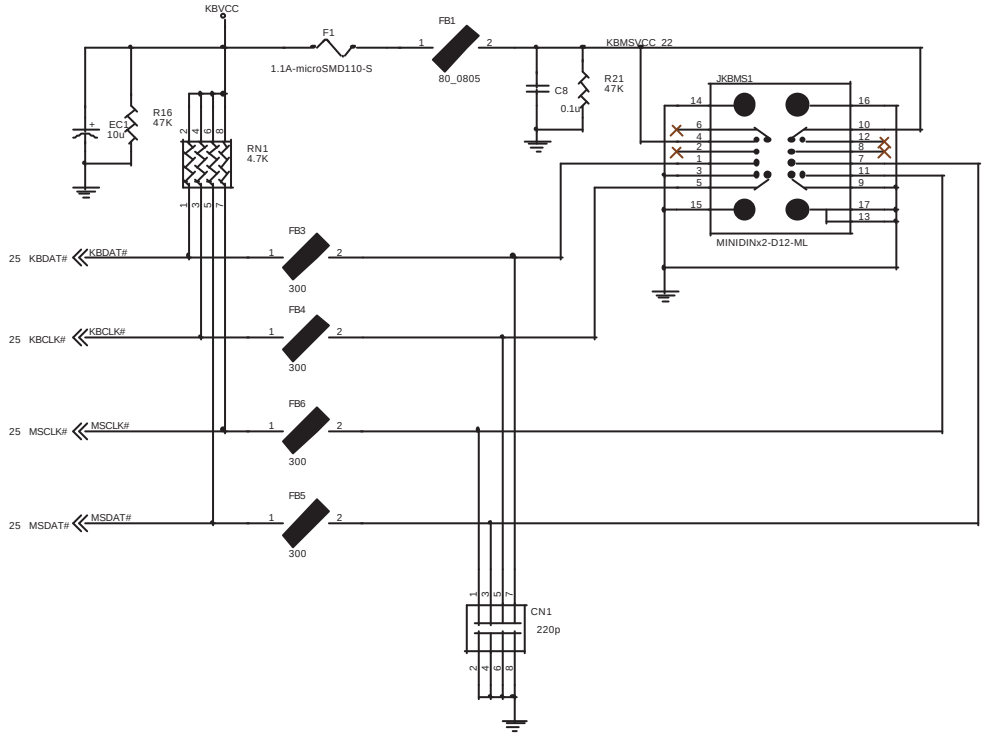

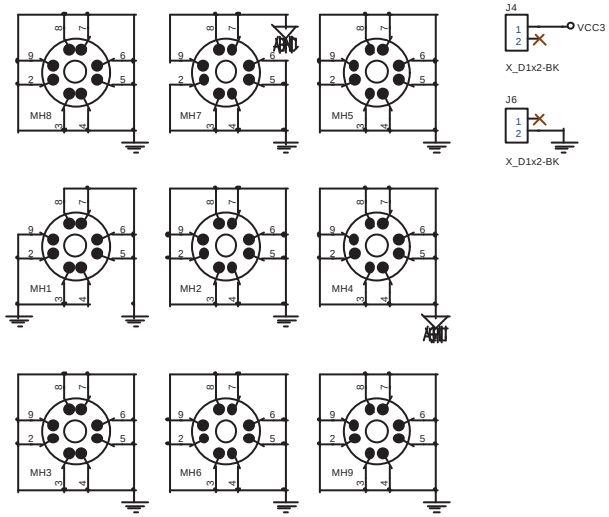

Title	MS-6713	
Size	Document Number {Doc}	Rev 0A
Date: Friday, August 16, 2002	Sheet 7 of 30	

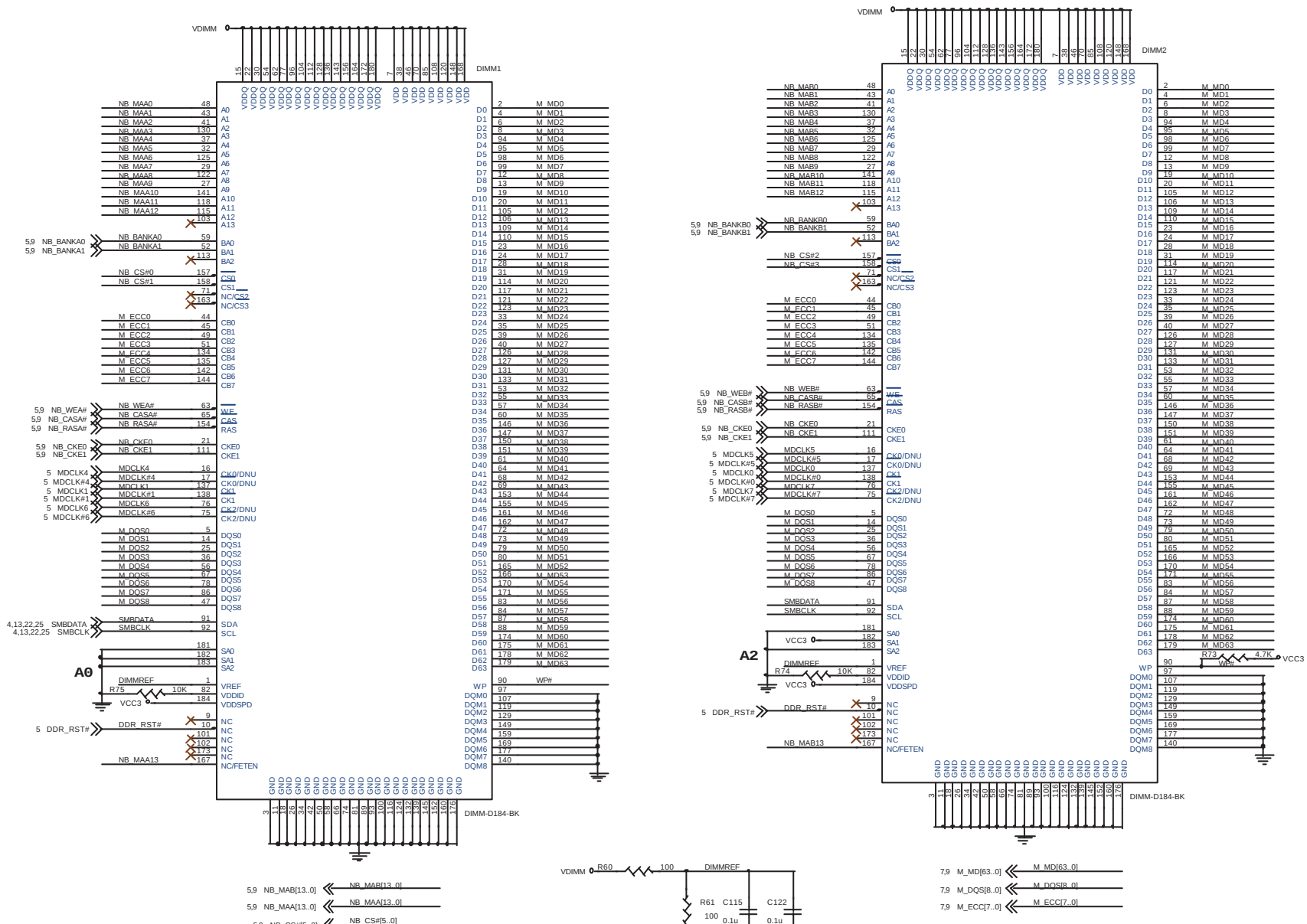

Title

MS-6713

Size	Document Number	Rev
	{Doc}	0A

Date: Friday, August 16, 2002 Sheet 8 of 30

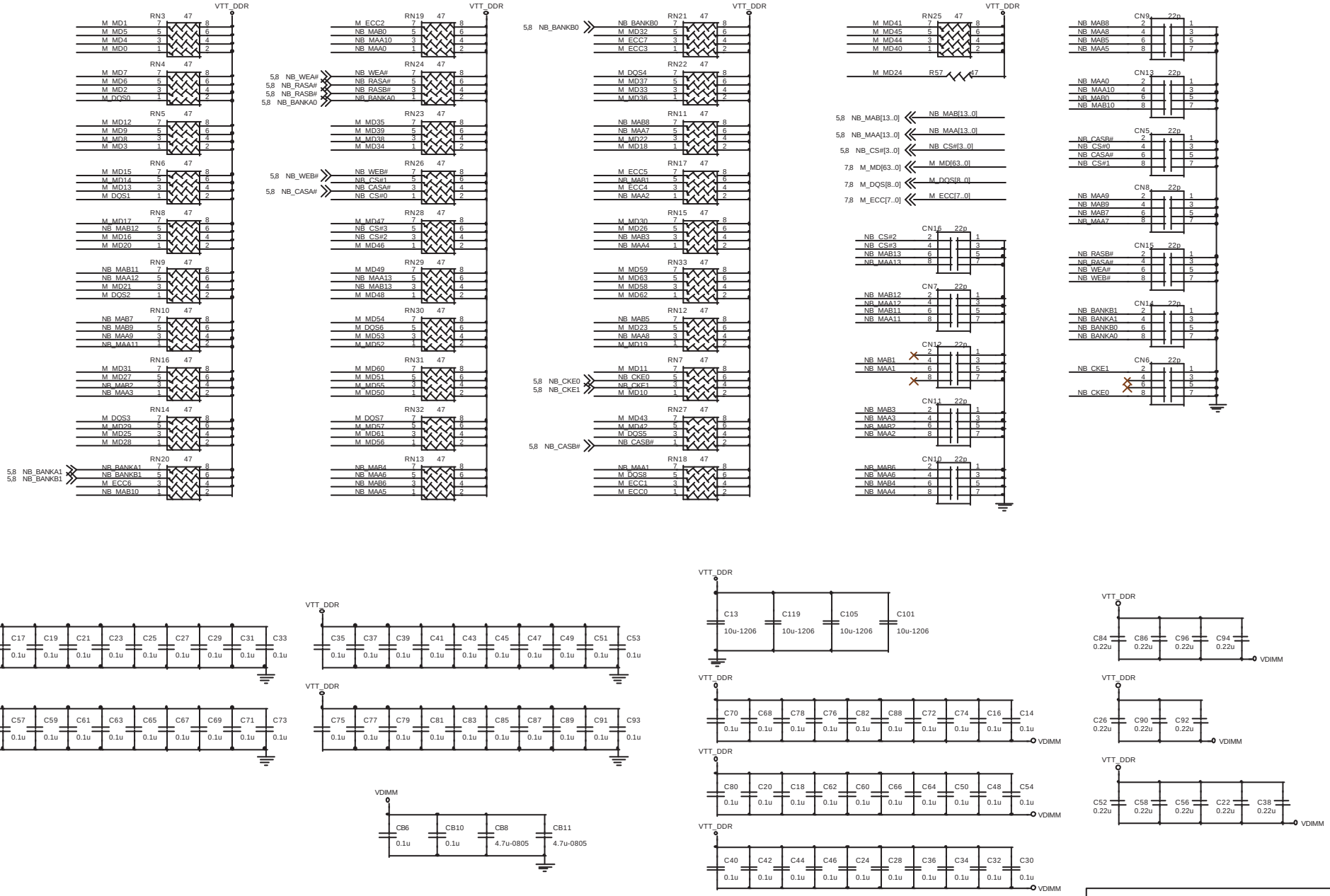

Title
MS-6713

Size	Document Number	Rev
	{Doc}	0A

Date: Friday, August 16, 2002 Sheet 9 of 30

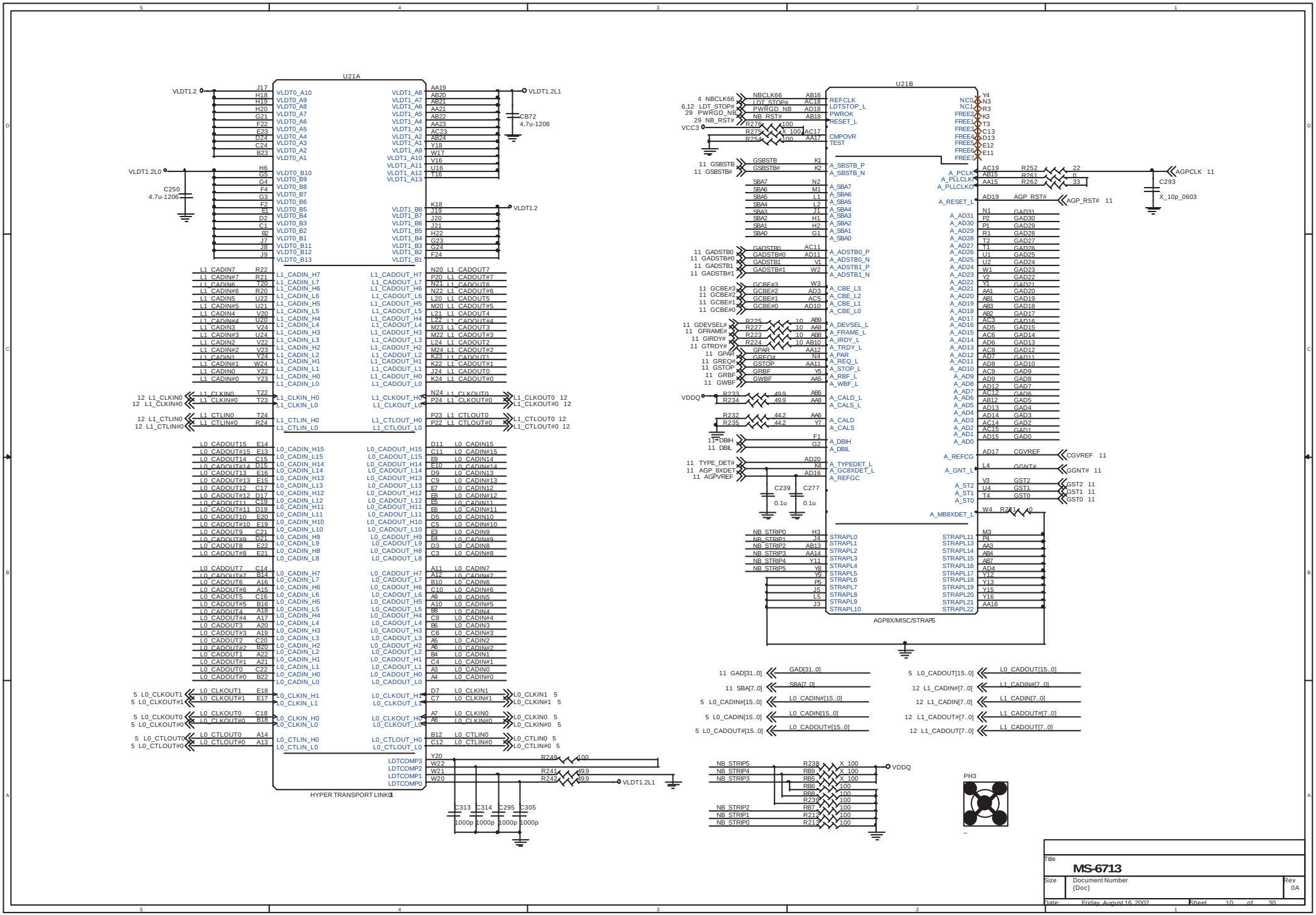
U21A
HYPER TRANSPORT LINK0
U21B
AGP8X/MISC/STRAPS
VLDT1.2
VLDT1.2L0
VLDT1.2L1
CB72
4.7u-1206
C250
4.7u-1206
VDDQ
VCC3
C293
X_10p_0603
AGPCLK 11
AGP_RST# 11
CGVREF 11
GGNT# 11
GST2 11
GST1 11
GST0 11
C239
0.1u
C277
0.1u
C313
1000p
C314
1000p
C295
1000p
C305
1000p
PH3
Title
MS-6713
Size
Document Number
{Doc}
Rev
0A
Date: Friday, August 16, 2002
Sheet 10 of 30

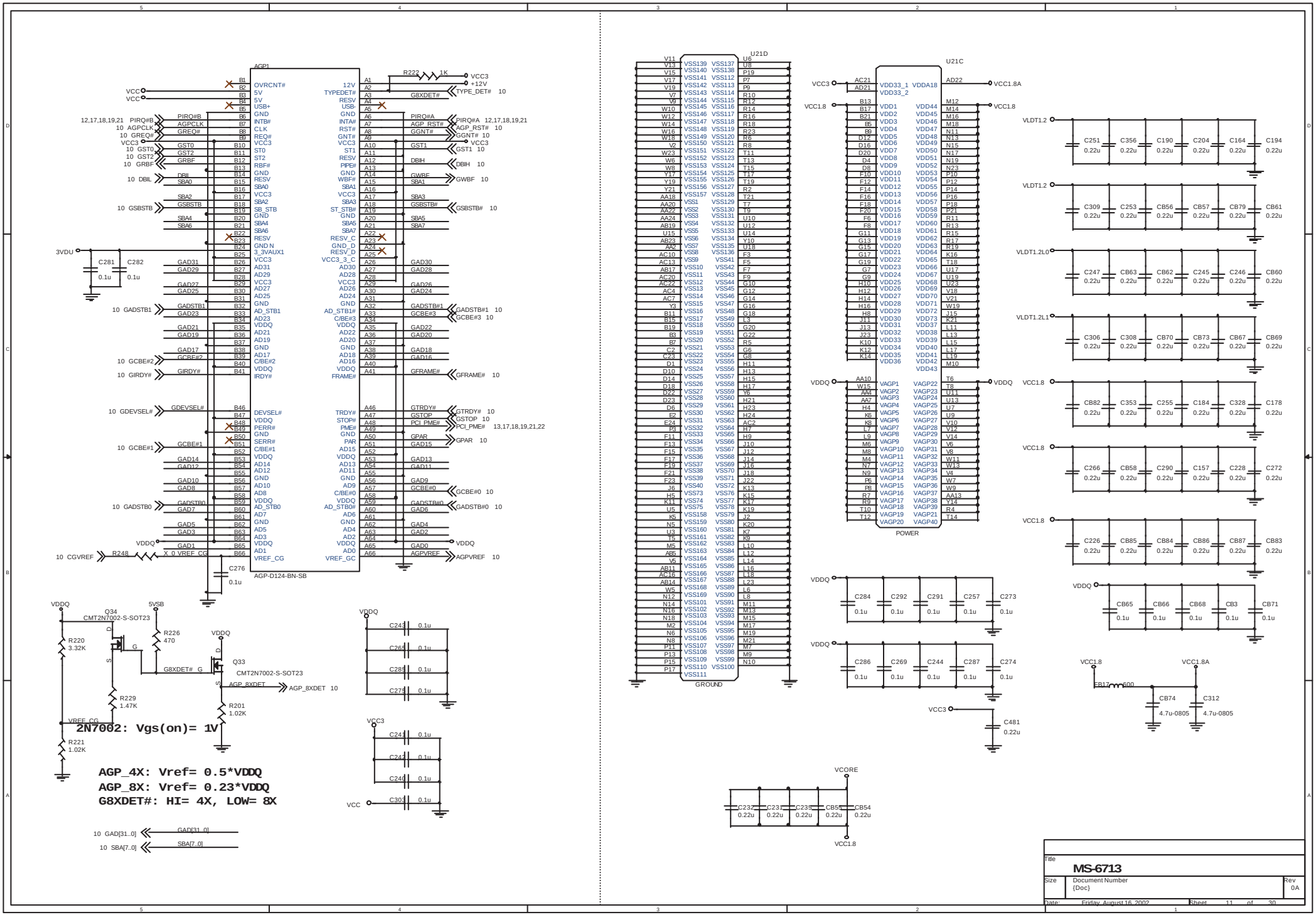
AGP1
AGP-D124-BN-SB
U21D
GROUND
U21C
POWER
2N7002: Vgs(on)= 1V
AGP_4X: Vref= 0.5*VDDQ
AGP_8X: Vref= 0.23*VDDQ
G8XDET#: HI= 4X, LOW= 8X
MS-6713
Size
Document Number
{Doc}
Rev
0A
Date: Friday, August 16, 2002
Sheet 11 of 30

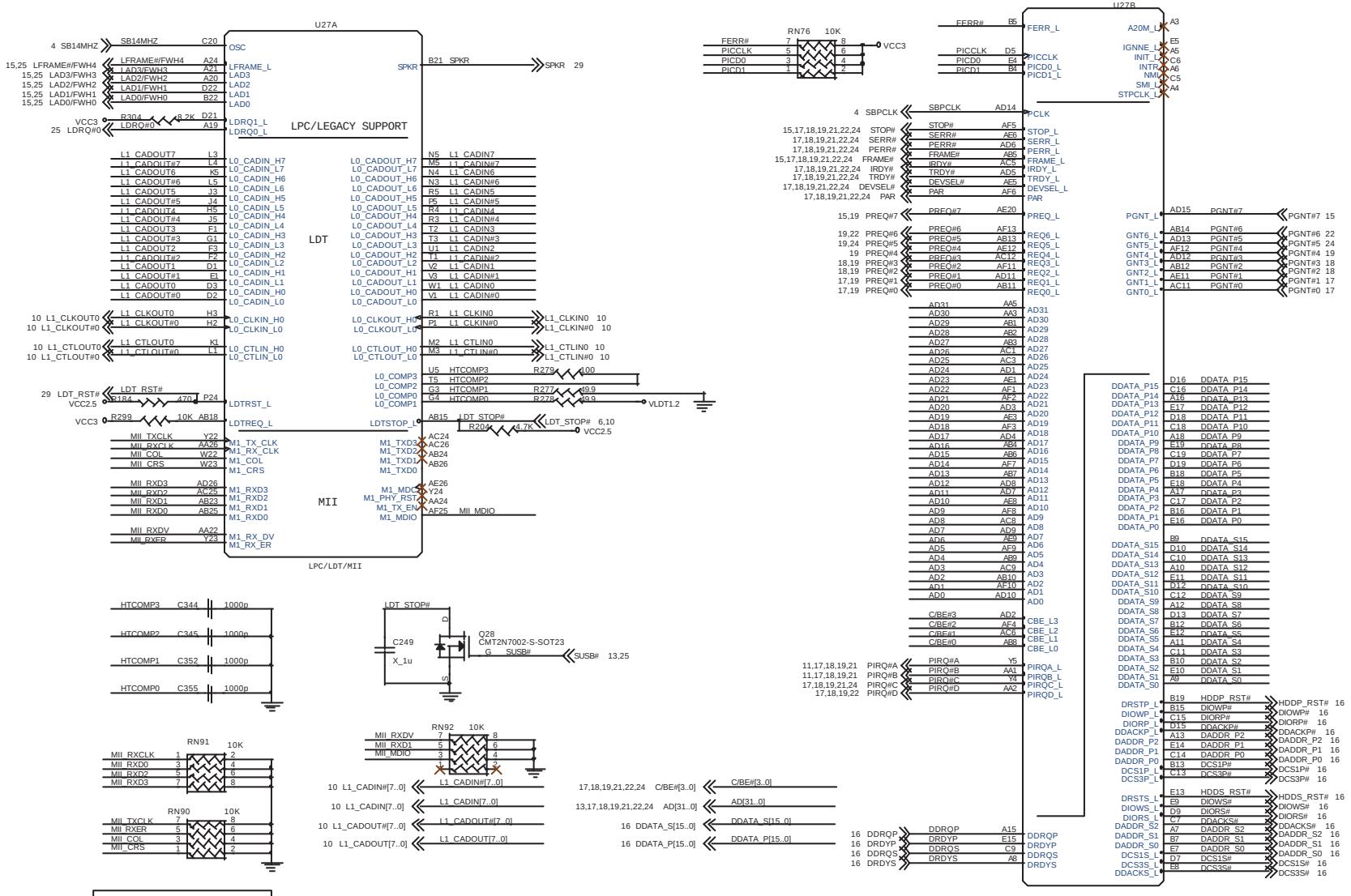

Title
MS-6713

Size	Document Number	Rev
	{Doc}	0A

Date: Friday, August 16, 2002 Sheet 12 of 30

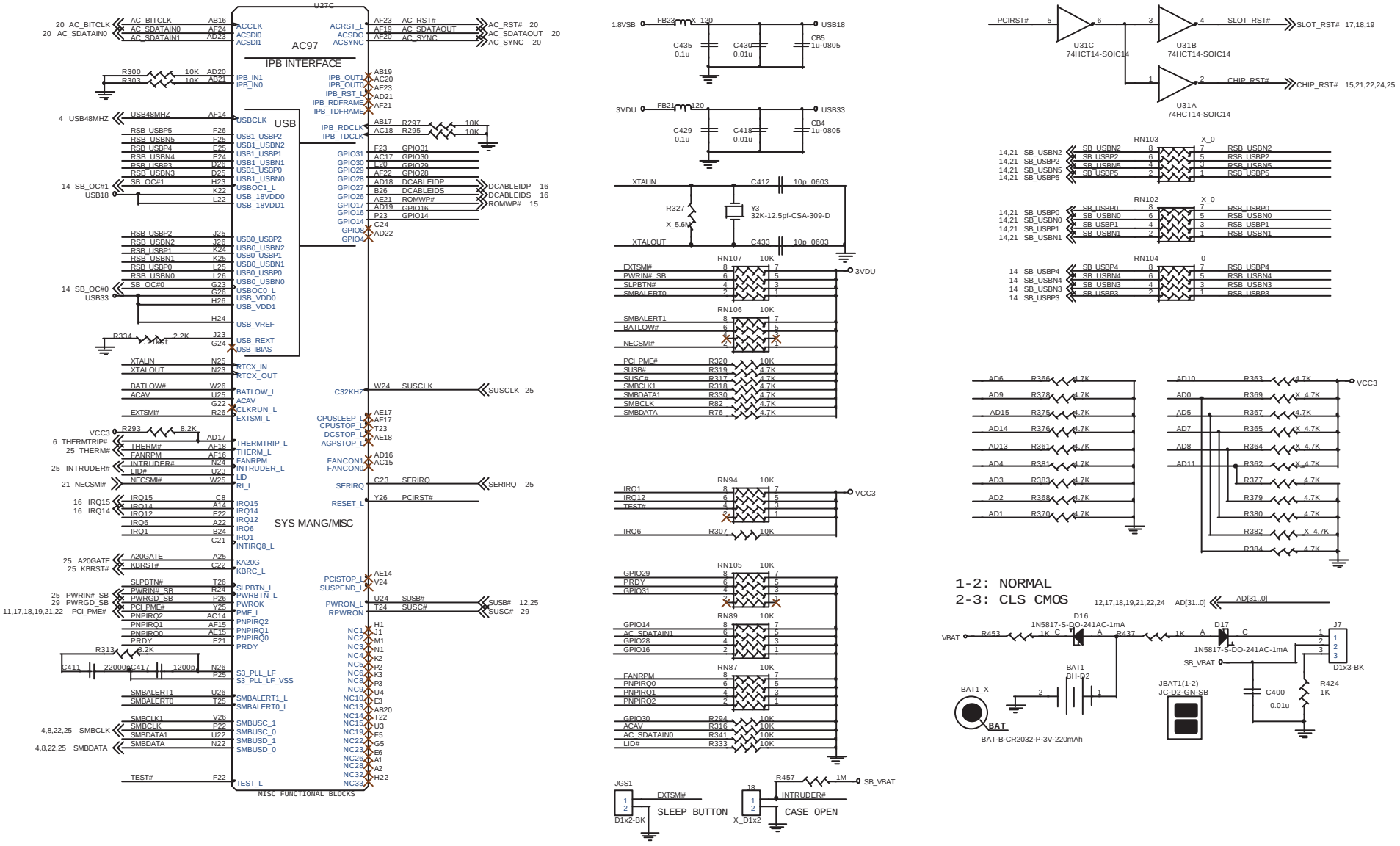

Title	MS-6713	
Size	Document Number {Doc}	Rev 0A
Date: Friday, August 16, 2002	Sheet 13 of 30	

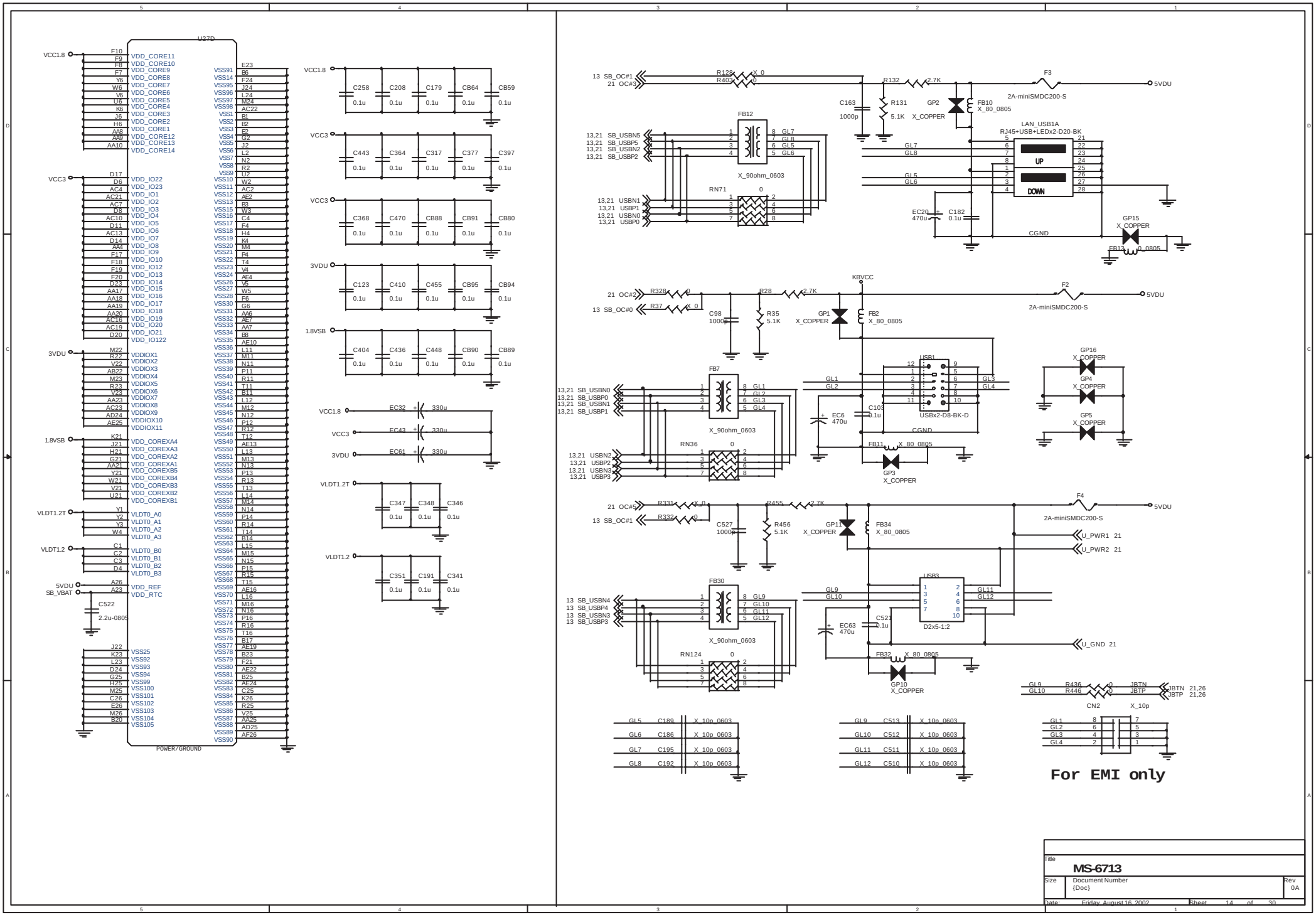
U37D
POWER/GROUND
VDD_CORE11
VDD_CORE10
VDD_CORE9
VDD_CORE8
VDD_CORE7
VDD_CORE6
VDD_CORE5
VDD_CORE4
VDD_CORE3
VDD_CORE2
VDD_CORE1
VDD_CORE12
VDD_CORE13
VDD_CORE14
VDD_IO22
VDD_IO23
VDD_IO1
VDD_IO2
VDD_IO3
VDD_IO4
VDD_IO5
VDD_IO6
VDD_IO7
VDD_IO8
VDD_IO9
VDD_IO10
VDD_IO12
VDD_IO13
VDD_IO14
VDD_IO15
VDD_IO16
VDD_IO17
VDD_IO18
VDD_IO19
VDD_IO20
VDD_IO21
VDD_IO122
VDDIOX1
VDDIOX2
VDDIOX3
VDDIOX4
VDDIOX5
VDDIOX6
VDDIOX7
VDDIOX8
VDDIOX9
VDDIOX10
VDDIOX11
VDD_COREXA4
VDD_COREXA3
VDD_COREXA2
VDD_COREXA1
VDD_COREXB5
VDD_COREXB4
VDD_COREXB3
VDD_COREXB2
VDD_COREXB1
VLDT0_A0
VLDT0_A1
VLDT0_A2
VLDT0_A3
VLDT0_B0
VLDT0_B1
VLDT0_B2
VLDT0_B3
VDD_REF
VDD_RTC
VSS25
VSS92
VSS93
VSS94
VSS99
VSS100
VSS101
VSS102
VSS103
VSS104
VSS105
VCC1.8
VCC3
3VDU
1.8VSB
VLDT1.2T
VLDT1.2
5VDU
SB_VBAT
C522
2.2u-0805
C258
C208
C179
C064
C059
C443
C364
C317
C377
C397
C368
C470
C088
C091
C080
C123
C410
C455
C095
C094
C404
C436
C448
C090
C089
EC32
EC43
EC61
330u
C347
C348
C346
C351
C191
C341
0.1u
13 SB_OC#1
21 OC#3
R128
R403
X_0
R132
2.7K
F3
2A-miniSMDC200-S
C163
1000p
R131
5.1K
GP2
X_COPPER
FB10
X_80_0805
FB12
X_90ohm_0603
13,21 SB_USBN5
13,21 SB_USBP5
13,21 SB_USBN2
13,21 SB_USBP2
13,21 USBN1
13,21 USBP1
13,21 USBN0
13,21 USBP0
RN71
LAN_USB1A
RJ45+USB+LEDx2-D20-BK
UP
DOWN
EC20
470u
C182
0.1u
CGND
GP15
X_COPPER
FB13
0_0805
21 OC#2
13 SB_OC#0
R328
R37
R28
C98
1000p
R35
5.1K
GP1
FB2
KBVCC
FB7
13,21 SB_USBN0
13,21 SB_USBP0
13,21 SB_USBN1
13,21 SB_USBP1
13,21 USBN2
13,21 USBP2
13,21 USBN3
13,21 USBP3
RN36
USB1
USBx2-D8-BK-D
EC6
470u
C103
0.1u
FB11
GP3
GP16
GP4
GP5
21 OC#5
13 SB_OC#1
R331
R332
R455
2.7K
C527
1000p
R456
5.1K
GP11
FB34
U_PWR1 21
U_PWR2 21
FB30
13 SB_USBN4
13 SB_USBP4
13 SB_USBN3
13 SB_USBP3
RN124
USB3
D2x5-1:2
EC63
470u
C521
0.1u
FB32
GP10
U_GND 21
R436
R446
JBTN
JBTP
21,26
CN2
X_10p
C189
C186
C195
C192
C513
C512
C511
C510
X_10p_0603
For EMI only
Title
MS-6713
Size
Document Number
{Doc}
Rev
0A
Date: Friday, August 16, 2002
Sheet 14 of 30

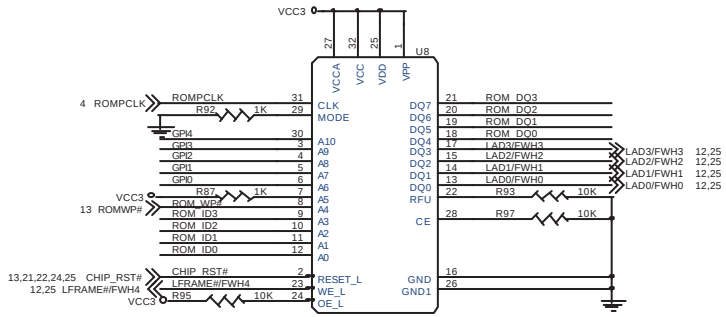

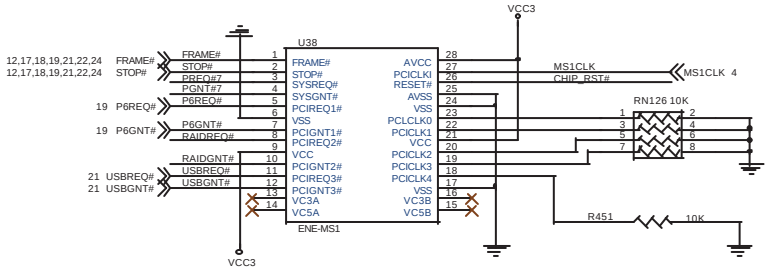

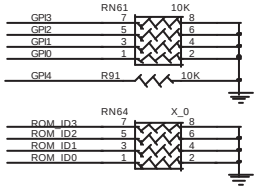

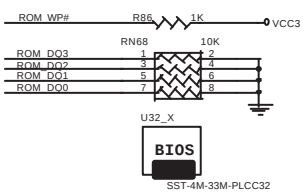

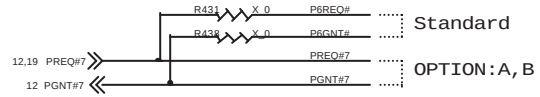

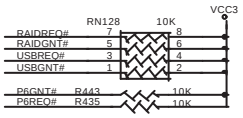

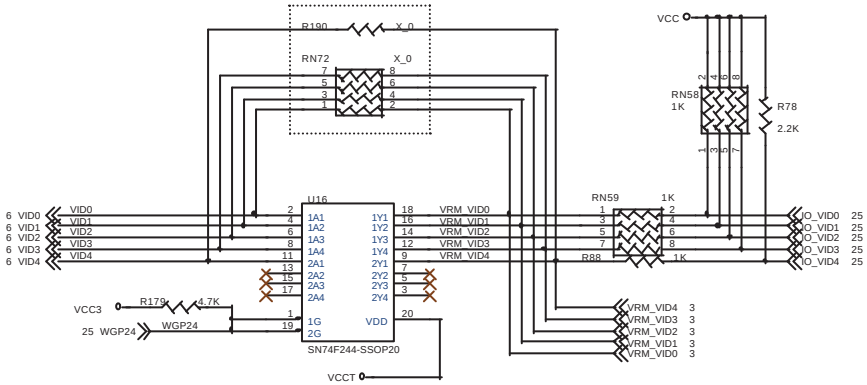

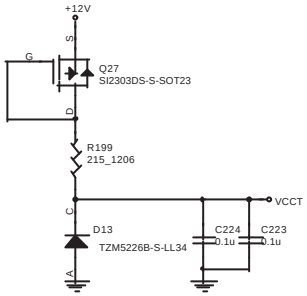

Title	MS-6713	
Size	Document Number {Doc}	Rev 0A
Date: Friday, August 16, 2002	Sheet 15 of 30	

PRIMARY IDE CONN.

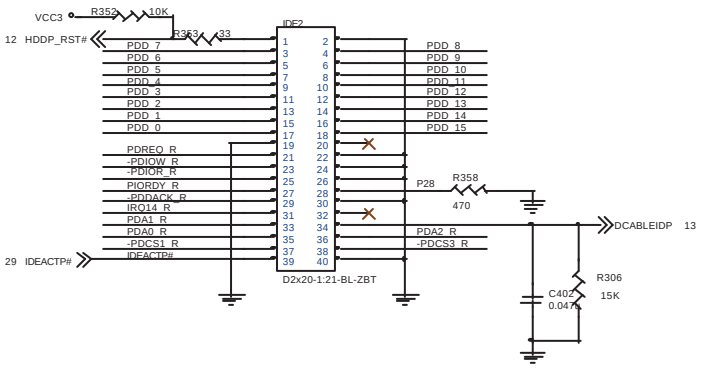

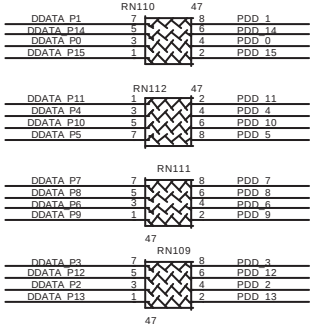

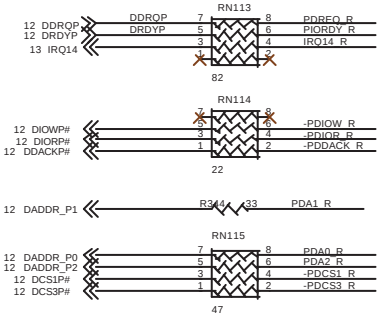

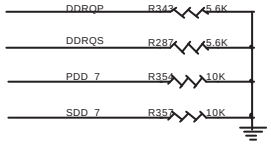

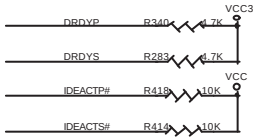

SECONDARY IDE CONN.

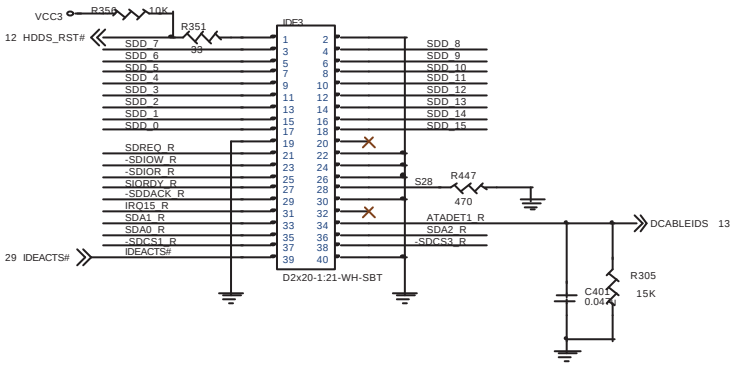

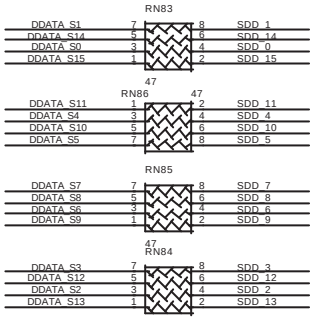

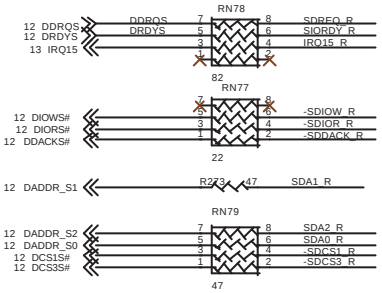

Title	MS-6713	
Size	Document Number {Doc}	Rev 0A
Date: Friday, August 16, 2002	Sheet 16 of 30	

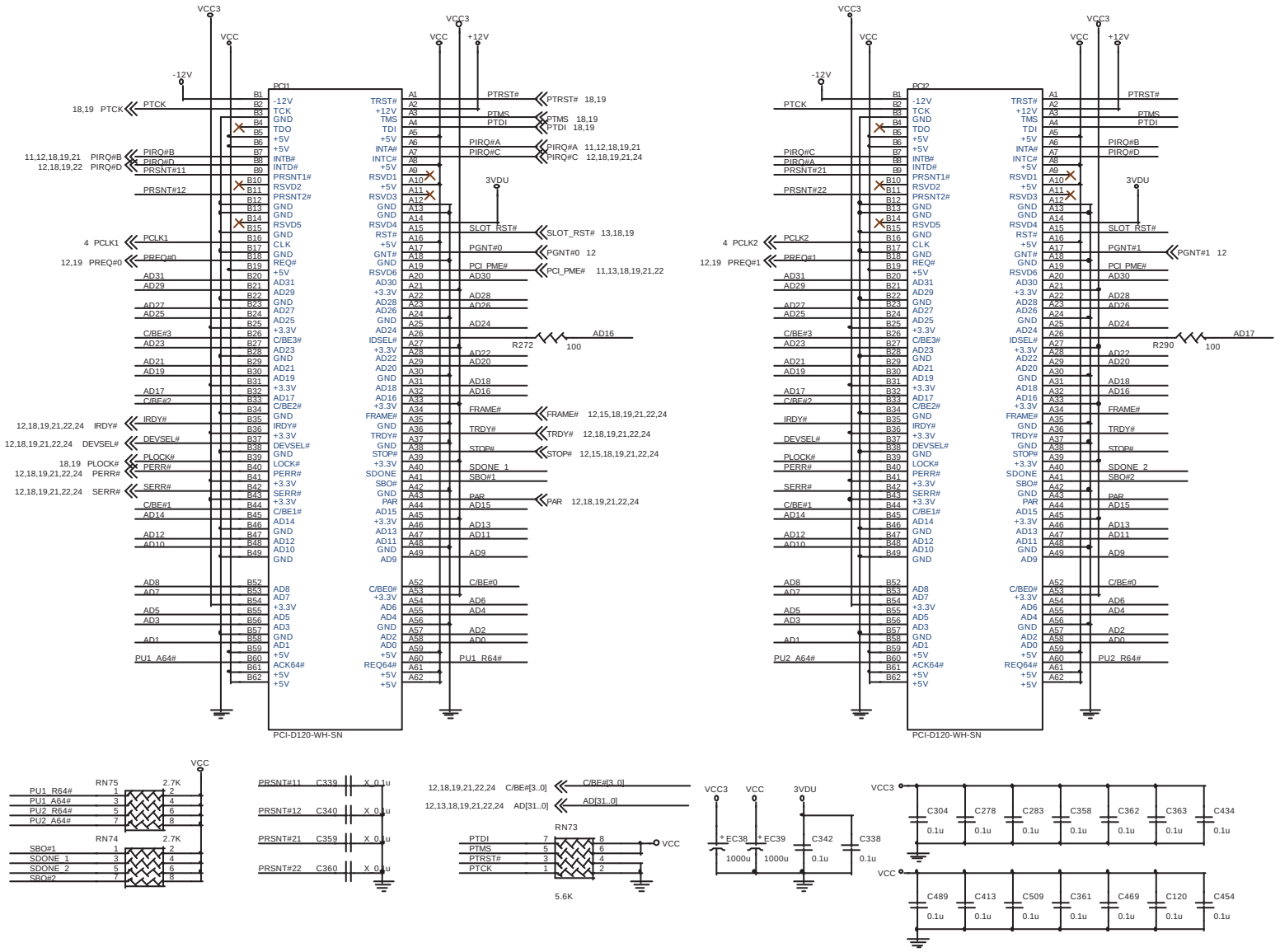

Title

MS-6713

Size	Document Number	Rev
	{Doc}	0A

Date: Friday, August 16, 2002 Sheet 17 of 30

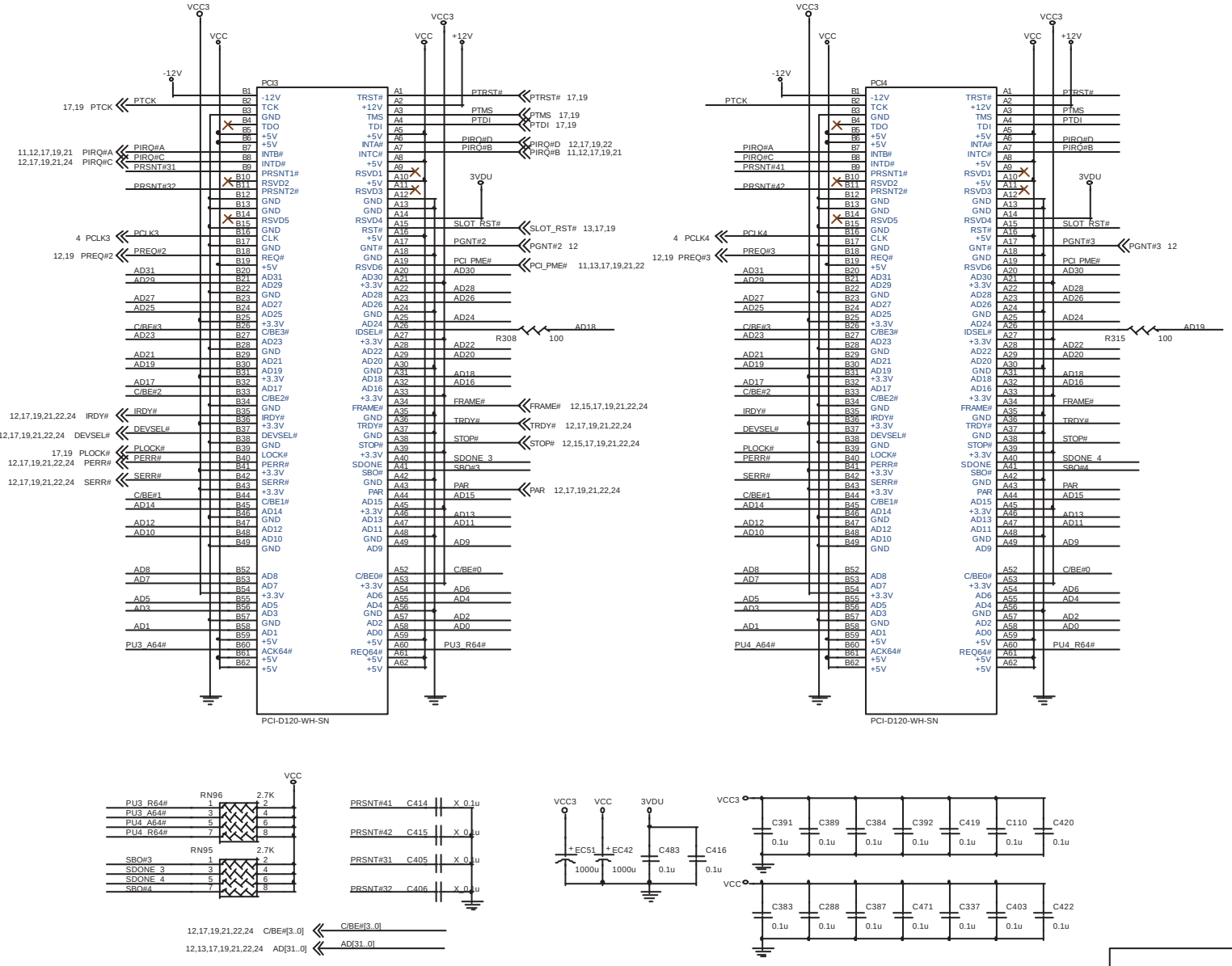

Title
MS-6713

Size	Document Number	Rev
	{Doc}	0A

Date: Friday, August 16, 2002 Sheet 18 of 30

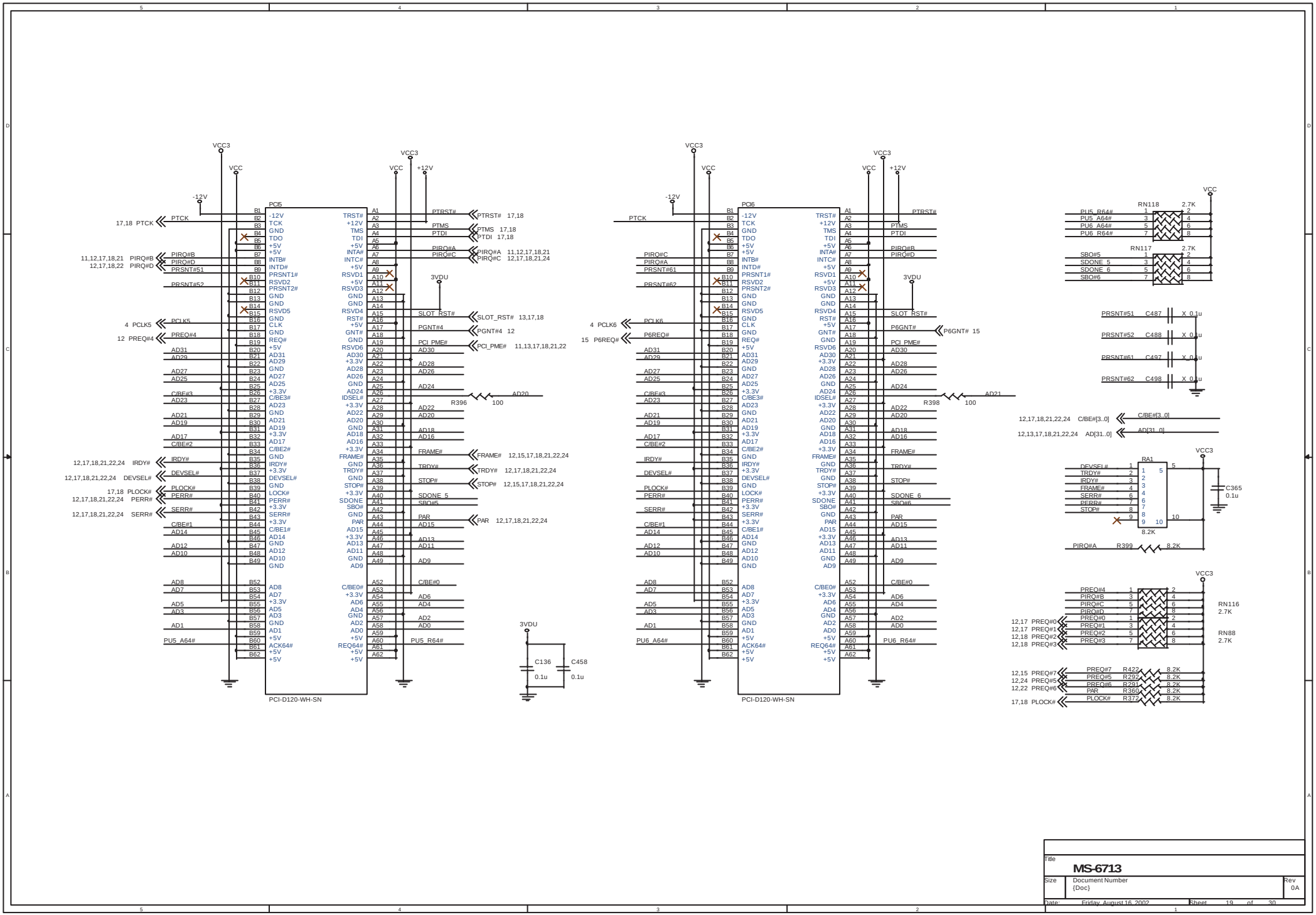

Title

MS-6713

Size	Document Number	Rev
	{Doc}	0A

Date: Friday, August 16, 2002 Sheet 19 of 30

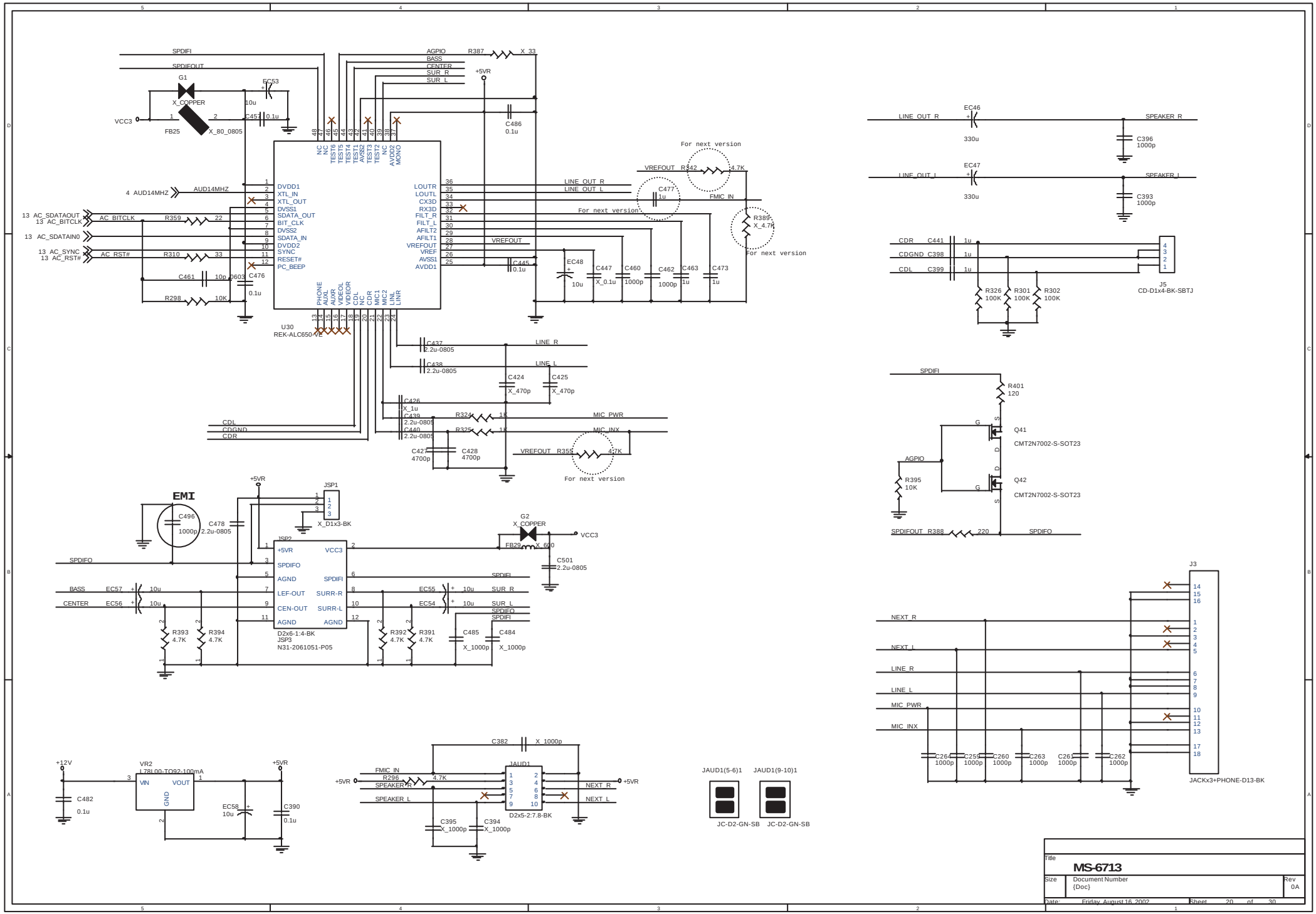
SPDIFI
SPDIFOUT
G1
X_COPPER
EC53
10u
VCC3
FB25
X_80_0805
C457
0.1u
AGPIO
BASS
CENTER
SUR_R
SUR_L
R387
X_33
+5VR
C486
0.1u
U30
REK-ALC650-VE
DVDD1
XTL_IN
XTL_OUT
DVSS1
SDATA_OUT
BIT_CLK
DVSS2
SDATA_IN
DVDD2
SYNC
RESET#
PC_BEEP
LOUTR
LOUTL
CX3D
RX3D
FILT_R
FILT_L
AFILT2
AFILT1
VREFOUT
VREF
AVSS1
AVDD1
4 AUD14MHZ
AUD14MHZ
13 AC_SDATAOUT
13 AC_BITCLK
AC_BITCLK
R359
22
13 AC_SDATAIN0
13 AC_SYNC
13 AC_RST#
AC_RST#
R310
33
C461
10p 0603
C476
0.1u
R298
10K
LINE_OUT_R
LINE_OUT_L
For next version
VREFOUT
R342
4.7K
C477
1u
FMIC_IN
R389
X_4.7K
C445
0.1u
EC48
10u
C447
X_0.1u
C460
1000p
C462
1000p
C463
1u
C473
1u
C437
2.2u-0805
C438
2.2u-0805
LINE_R
LINE_L
C424
X_470p
C425
X_470p
C426
X_1u
C439
2.2u-0805
C440
2.2u-0805
R324
1K
R325
1K
MIC_PWR
MIC_INX
C427
4700p
C428
4700p
VREFOUT
R355
4.7K
CDL
CDGND
CDR
EMI
C496
1000p
C478
2.2u-0805
JSP1
X_D1x3-BK
JSP2
D2x6-1:4-BK
JSP3
N31-2061051-P05
+5VR
VCC3
SPDIFO
SPDIFI
AGND
LEF-OUT
CEN-OUT
SURR-R
SURR-L
BASS
CENTER
EC57
EC56
10u
EC55
EC54
SUR_R
SUR_L
R393
4.7K
R394
4.7K
R392
4.7K
R391
4.7K
C485
X_1000p
C484
X_1000p
G2
X_COPPER
FB29
X_600
C501
2.2u-0805
+12V
VR2
L78L00-TO92-100mA
VIN
VOUT
GND
C482
0.1u
EC58
10u
C390
0.1u
C382
X_1000p
JAUD1
D2x5-2:7.8-BK
FMIC_IN
R296
4.7K
SPEAKER_R
SPEAKER_L
NEXT_R
NEXT_L
C395
X_1000p
C394
X_1000p
JAUD1(5-6)1
JAUD1(9-10)1
JC-D2-GN-SB
JC-D2-GN-SB
LINE_OUT_R
LINE_OUT_L
EC46
330u
EC47
330u
SPEAKER_R
SPEAKER_L
C396
1000p
C393
1000p
CDR
CDGND
CDL
C441
C398
C399
1u
R326
100K
R301
100K
R302
100K
J5
CD-D1x4-BK-SBTJ
R401
120
Q41
CMT2N7002-S-SOT23
Q42
CMT2N7002-S-SOT23
AGPIO
R395
10K
SPDIFOUT
R388
220
SPDIFO
J3
JACKx3+PHONE-D13-BK
NEXT_R
NEXT_L
LINE_R
LINE_L
MIC_PWR
MIC_INX
C264
1000p
C259
1000p
C260
1000p
C263
1000p
C261
1000p
C262
1000p
Title
MS-6713
Size
Document Number
{Doc}
Rev
0A
Date: Friday, August 16, 2002
Sheet 20 of 30

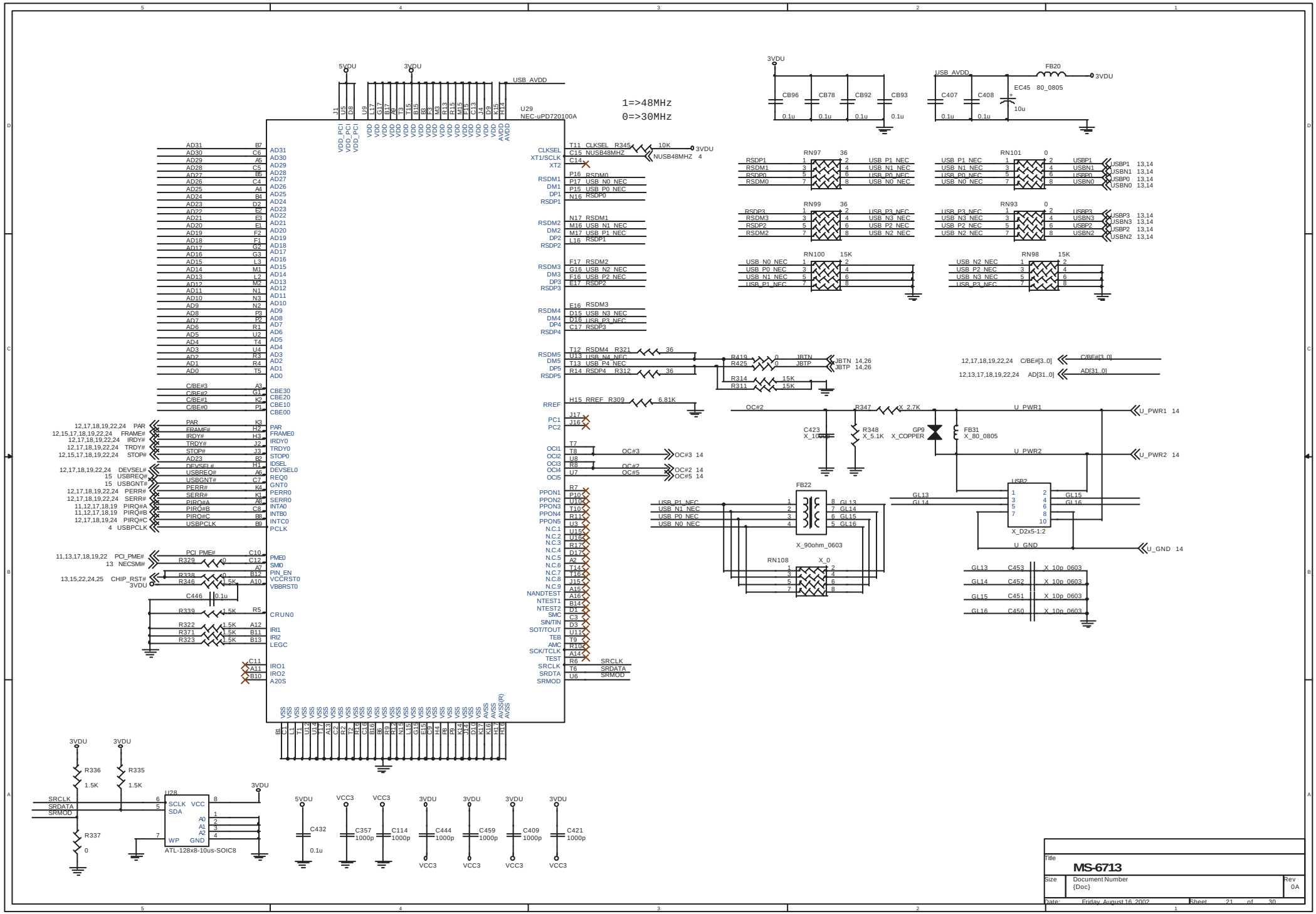

1=>48MHz
0=>30MHz
U29
NEC-uPD720100A
U28
ATL-128x8-10us-SOIC8
FB22
X_90ohm_0603
USB2
X_D2x5-1:2
GP9
X_COPPER
FB31
X_80_0805
FB20
EC45 80_0805
RN97
RN99
RN100
RN101
RN93
RN98
RN108
X_0
C423
X_10
R348
X_5.1K
R347
X_2.7K
U_PWR1
U_PWR2
U_GND
C453
C452
C451
C450
X_10p_0603
C/BE#[3..0]
AD[31..0]
C/BE#[3..0]
AD[31..0]
USB_AVDD
3VDU
5VDU
VCC3
SRCLK
SRDATA
SRMOD
R336
R335
R337
C432
C357
C114
C444
C459
C409
C421
1000p
Title
MS-6713
Size
Document Number
{Doc}
Rev
0A
Date: Friday, August 16, 2002
Sheet 21 of 30

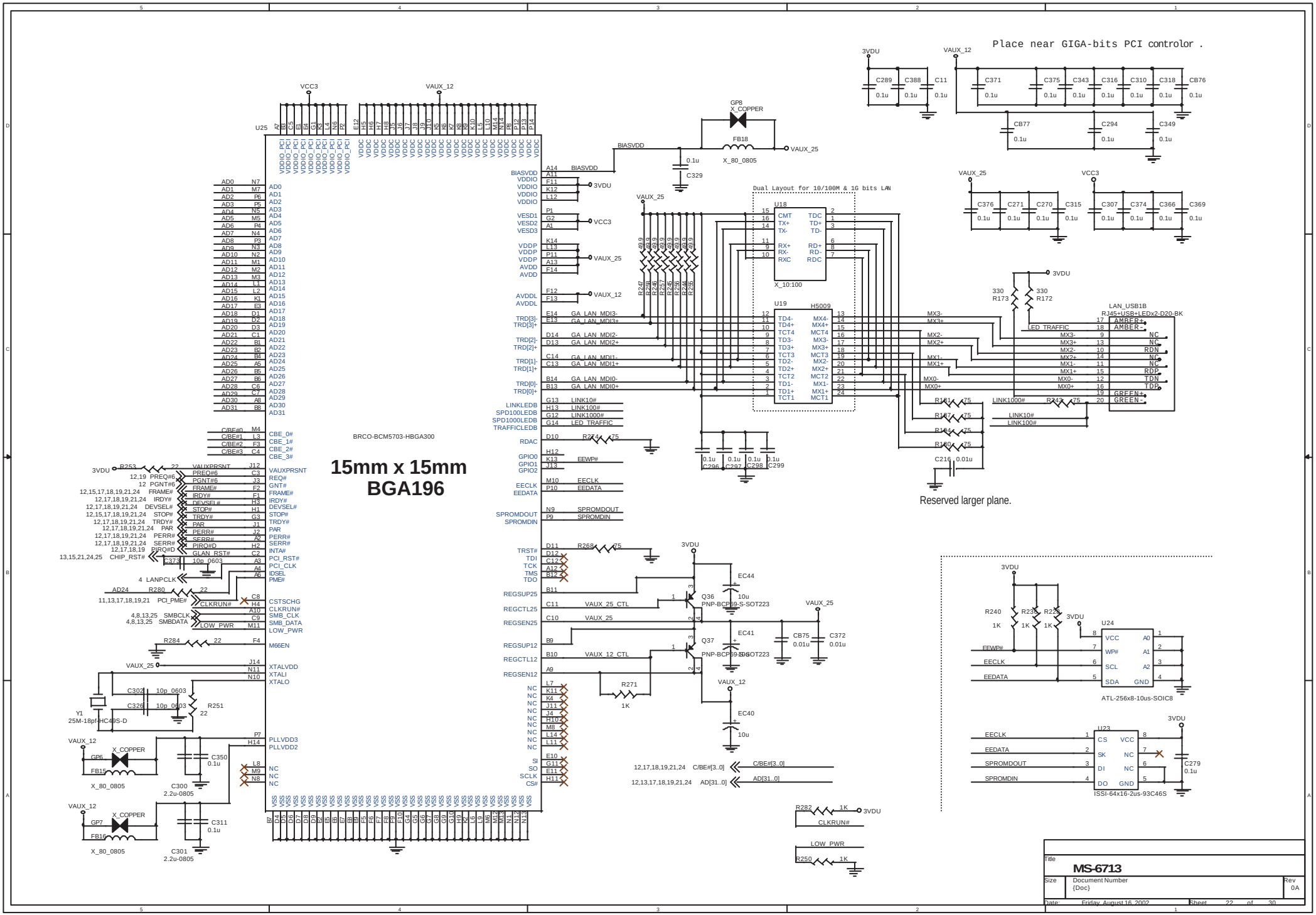
Place near GIGA-bits PCI controlor .
U25
BRCO-BCM5703-HBGA300
15mm x 15mm
BGA196
Dual Layout for 10/100M & 1G bits LAN
U18
X_10:100
U19
H5009
LAN_USB1B
RJ45+USB+LEDx2-D20-BK
Reserved larger plane.
U24
ATL-256x8-10us-SOIC8
U23
ISSI-64x16-2us-93C46S
Y1
25M-18pf-HC49S-D
X_80_0805
X_COPPER
Q36
PNP-BCP69-S-SOT223
Q37
PNP-BCP69-S-SOT223
Title
MS-6713
Size
Document Number
{Doc}
Rev
0A
Date: Friday, August 16, 2002
Sheet 22 of 30

Title	MS-6713	
Size	Document Number {Doc}	Rev 0A
Date: Monday, July 15, 2002	Sheet 23 of 30	

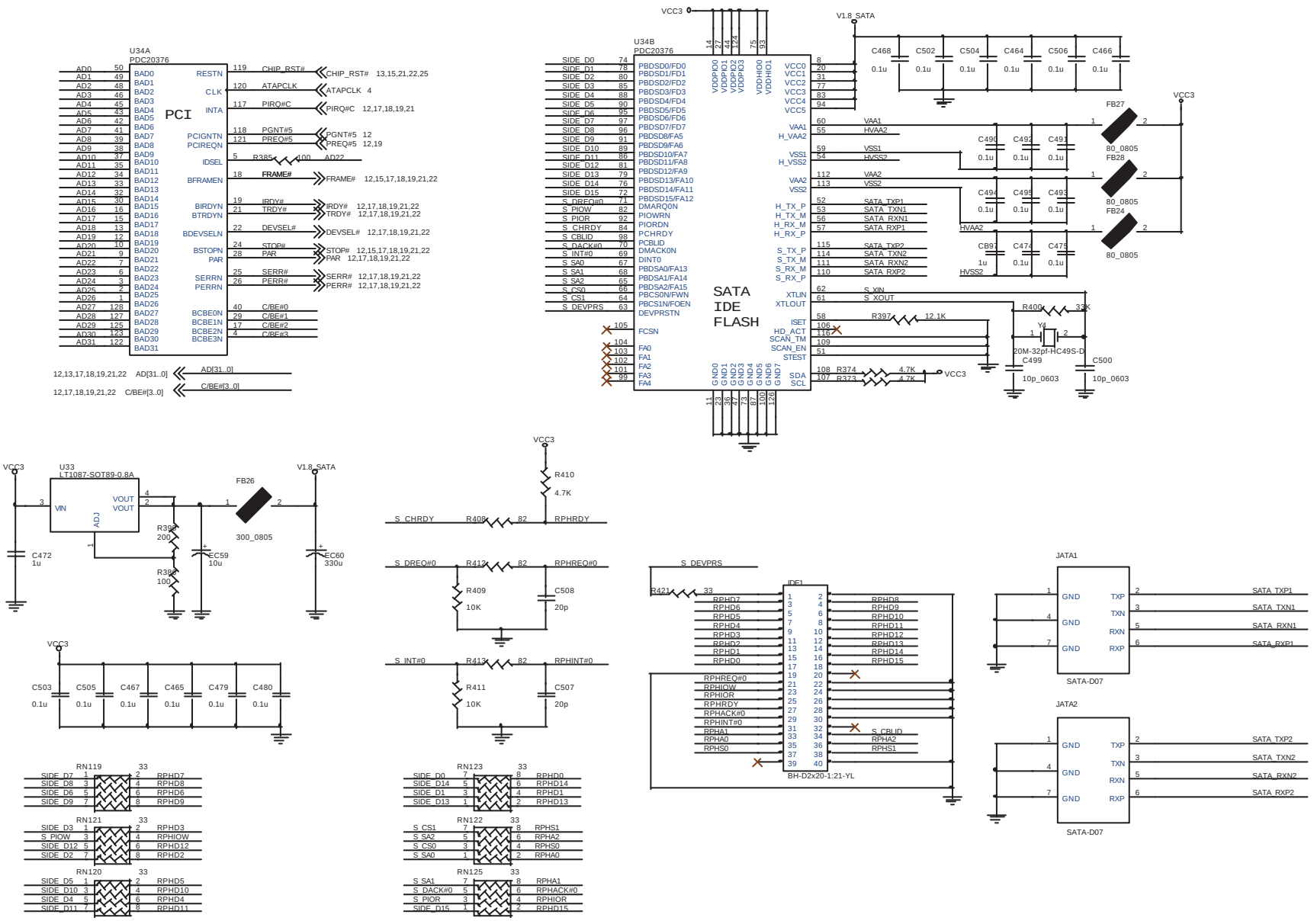

Title	MS-6713	
Size	Document Number {Doc}	Rev 0A
Date: Friday, August 16, 2002	Sheet 24 of 30	

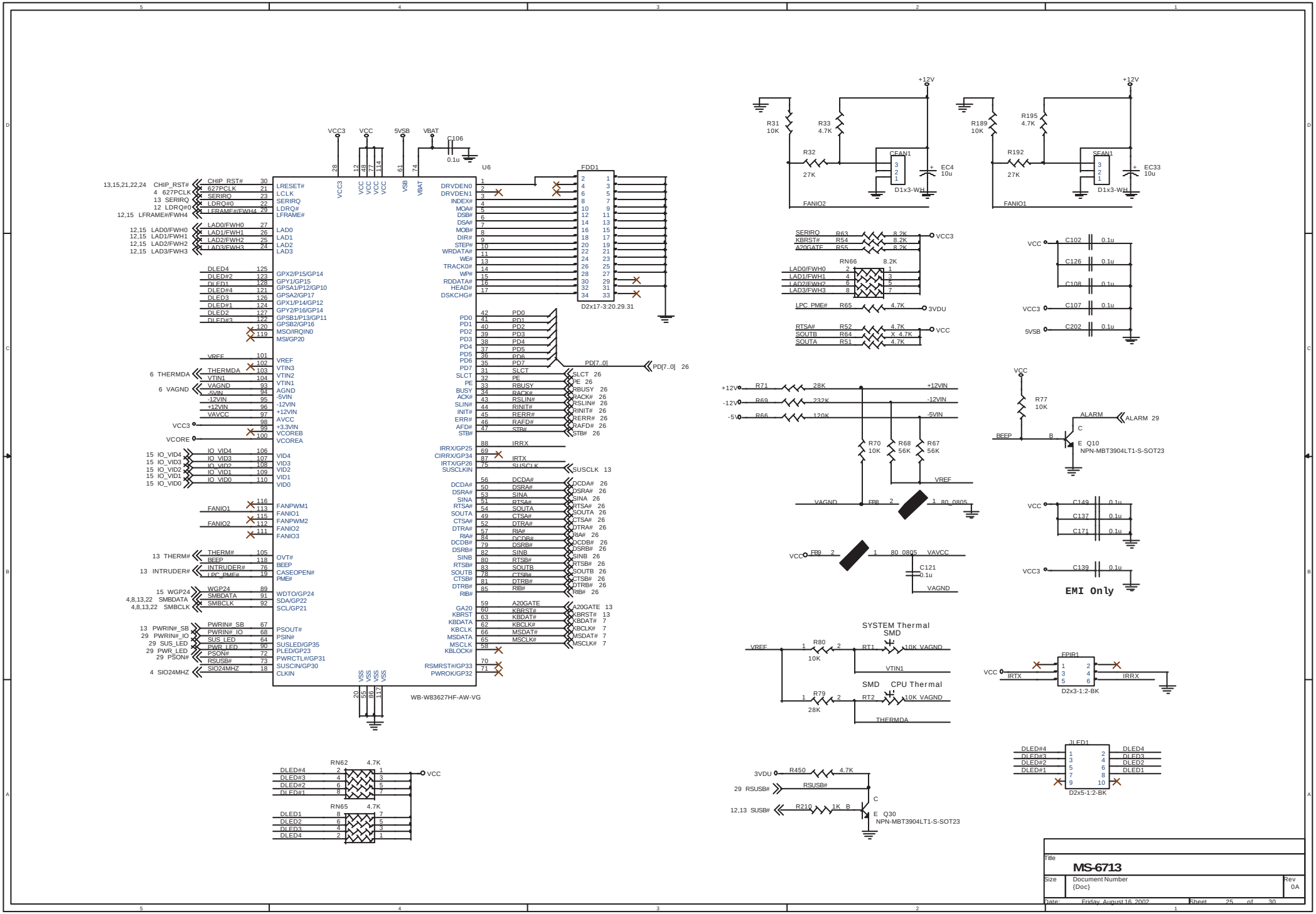
U6
WB-W83627HF-AW-VG
FDD1
D2x17-3:20.29.31
VCC3
VCC
5VSB
VBAT
C106
0.1u
CHIP_RST#
627PCLK
SERIRQ
LDRQ#0
LFRAME#/FWH4
LAD0/FWH0
LAD1/FWH1
LAD2/FWH2
LAD3/FWH3
DLED4
DLED#2
DLED1
DLED#4
DLED3
DLED#1
DLED2
DLED#3
VREF
THERMDA
VTIN1
VAGND
-5VIN
-12VIN
+12VIN
VAVCC
VCORE
IO_VID4
IO_VID3
IO_VID2
IO_VID1
IO_VID0
FANIO1
FANIO2
THERM#
BEEP
INTRUDER#
LPC_PME#
WGP24
SMBDATA
SMBCLK
PWRIN#_SB
PWRIN#_IO
SUS_LED
PWR_LED
PSON#
RSUSB#
SIO24MHZ
PD[7..0]
SUSCLK
IRRX
IRTX
A20GATE
KBRST#
KBDATA
KBCLK#
MSDATA
MSCLK
KBLOCK#
RSMRST#/GP33
PWROK/GP32
RN62 4.7K
RN65 4.7K
VCC
R31 10K
R33 4.7K
R32 27K
CEAN1
EC4 10u
D1x3-WH
FANIO2
R189 10K
R195 4.7K
R192 27K
EC33 10u
FANIO1
SERIRO R63 8.2K
KBRST# R54 8.2K
A20GATE R55 8.2K
RN66 8.2K
LPC_PME# R65 4.7K 3VDU
RTSA# R52 4.7K
SOUTB R64 X 4.7K
SOUTA R51 4.7K
C102 0.1u
C126 0.1u
C108 0.1u
C107 0.1u
C202 0.1u
R71 28K +12VIN
R69 232K -12VIN
R66 120K -5VIN
R70 10K
R68 56K
R67 56K
FB8 80_0805
FB9 80_0805 VAVCC
C121 0.1u
R77 10K
ALARM
ALARM 29
Q10
NPN-MBT3904LT1-S-SOT23
C149 0.1u
C137 0.1u
C171 0.1u
C139 0.1u
EMI Only
SYSTEM Thermal
SMD
R80 10K
10K VAGND
VTIN1
SMD CPU Thermal
R79 28K
10K VAGND
THERMDA
FPIR1
D2x3-1:2-BK
JLED1
D2x5-1:2-BK
R450 4.7K
R210 1K
Q30
NPN-MBT3904LT1-S-SOT23
Title
MS-6713
Size
Document Number
{Doc}
Rev
0A
Date: Friday, August 16, 2002
Sheet 25 of 30

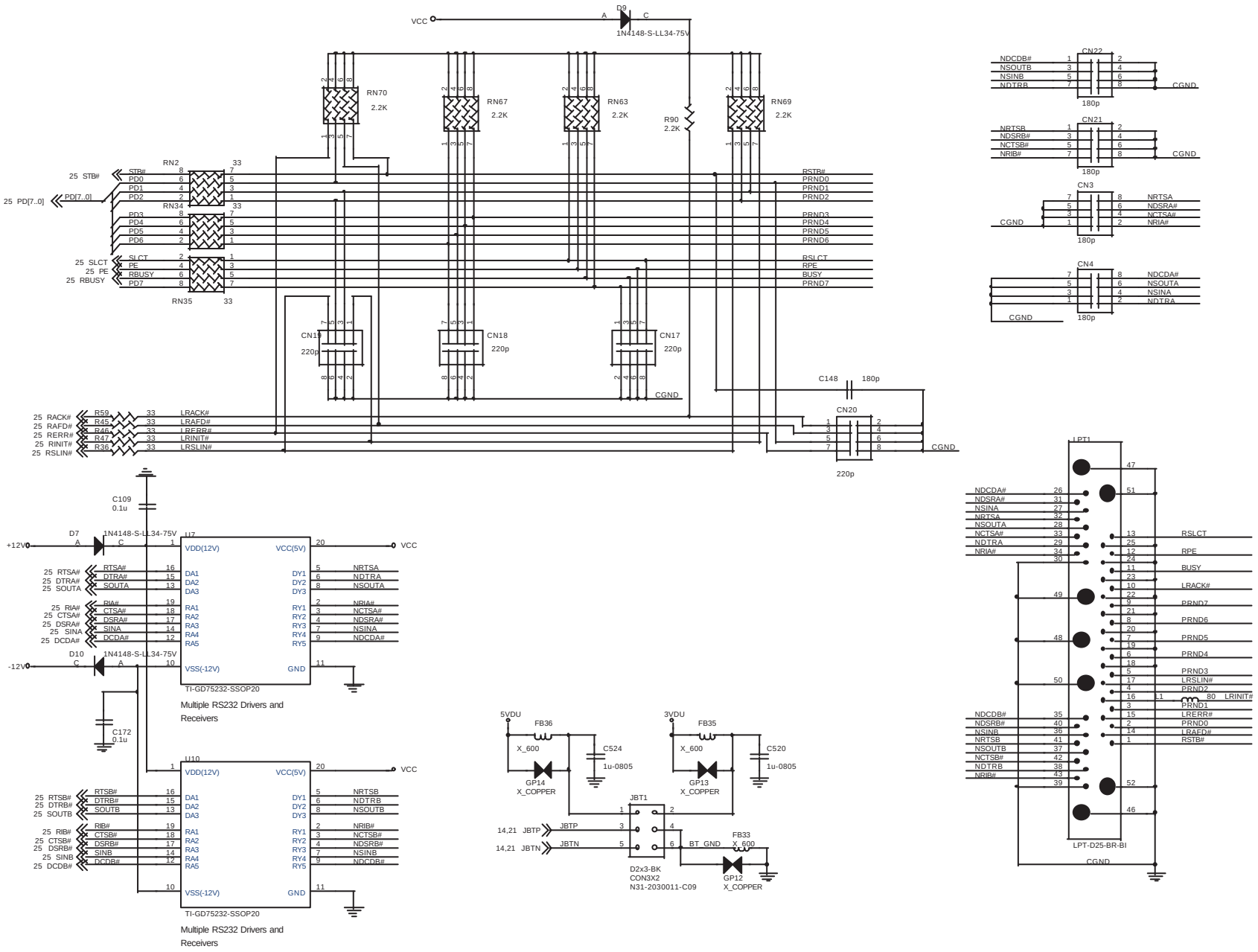

Title
MS-6713

Size	Document Number	Rev
	{Doc}	0A

Date: Friday, August 16, 2002 Sheet 26 of 30

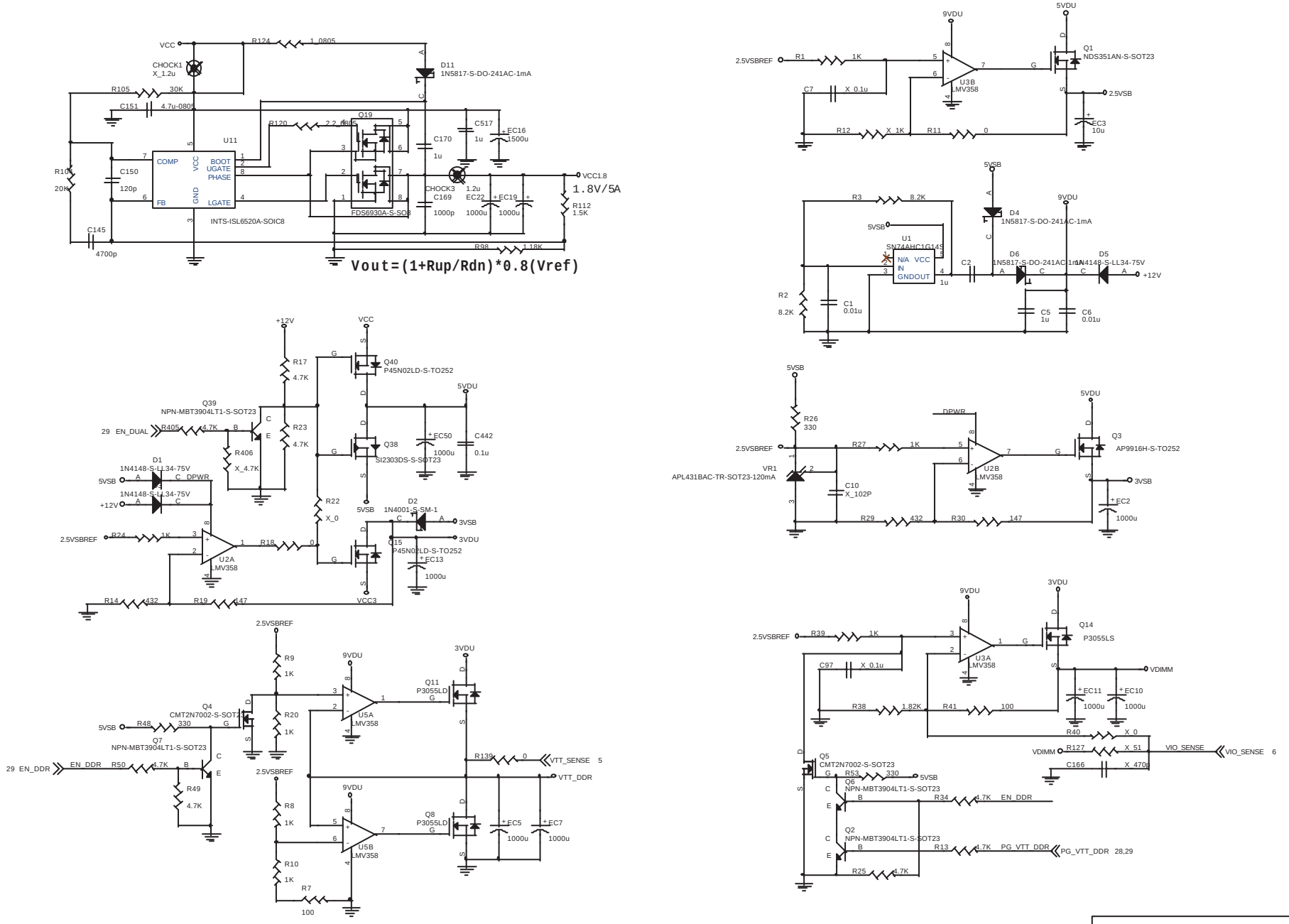

Title
MS-6713

Size	Document Number	Rev
	{Doc}	0A

Date: Friday, August 16, 2002 Sheet 27 of 30

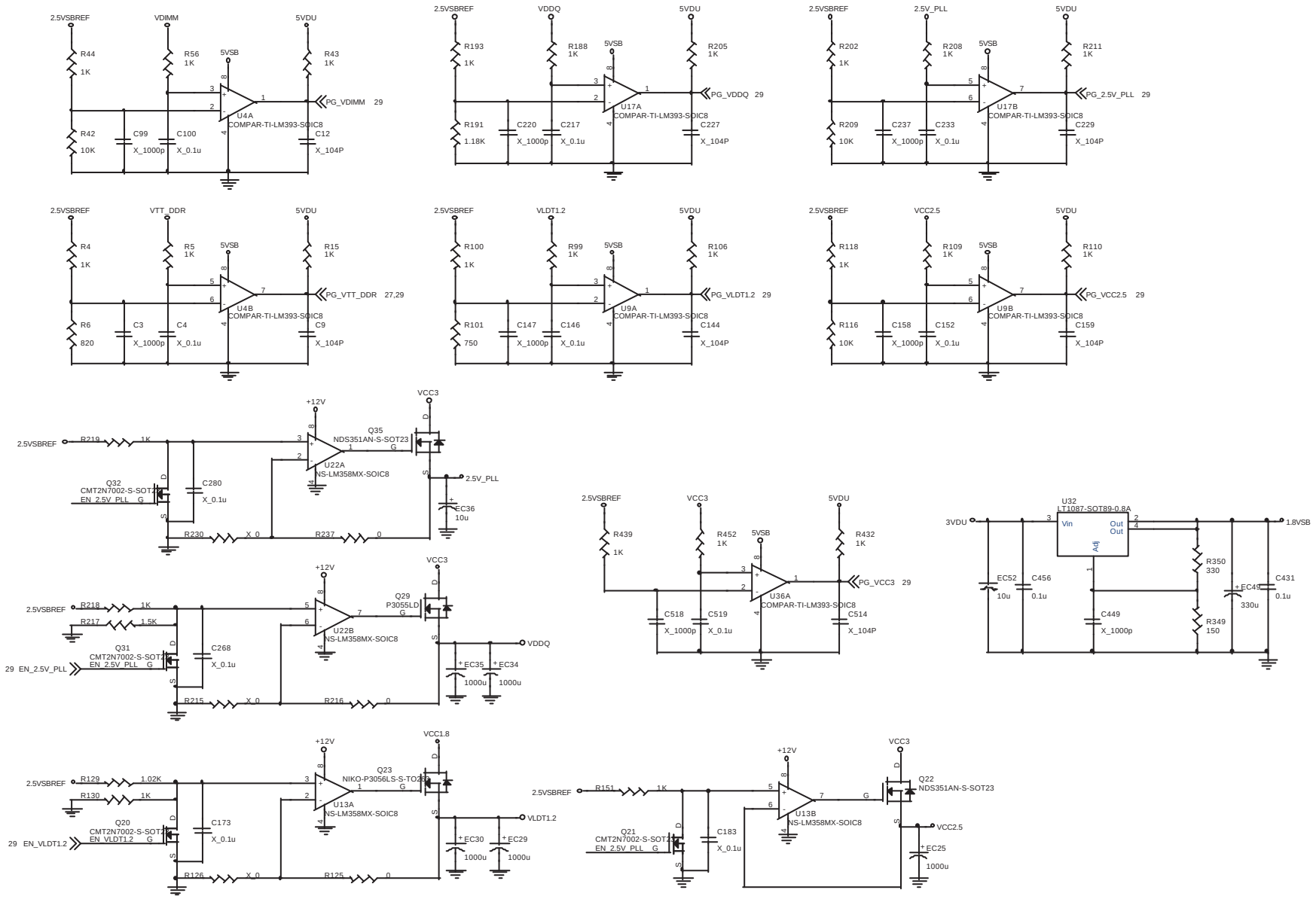

Title	MS-6713	
Size	Document Number {Doc}	Rev 0A
Date: Friday, August 16, 2002	Sheet 28 of 30	

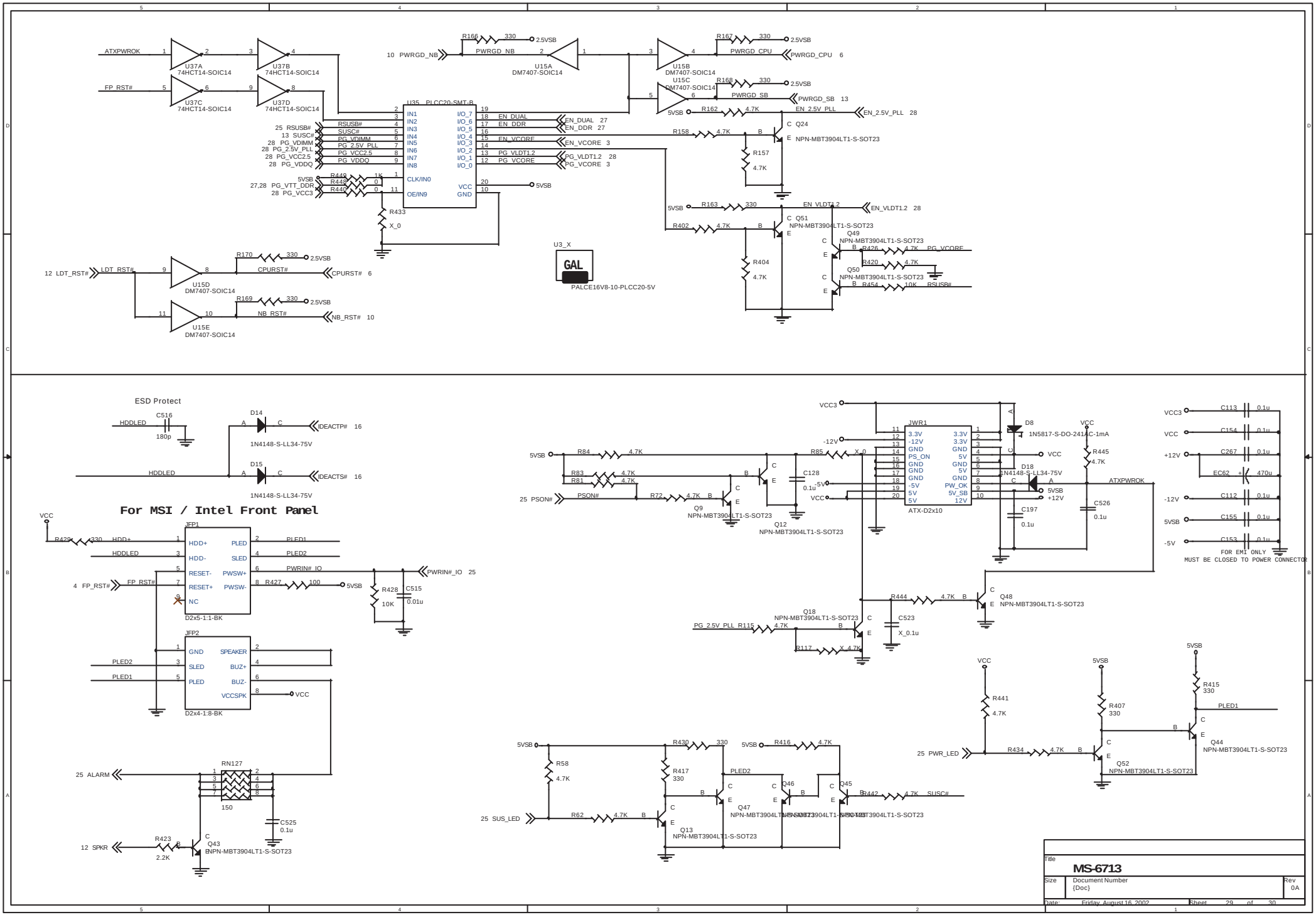
ESD Protect
For MSI / Intel Front Panel
U37A 74HCT14-SOIC14
U37B 74HCT14-SOIC14
U37C 74HCT14-SOIC14
U37D 74HCT14-SOIC14
U35 PLCC20-SMT-B
U15A DM7407-SOIC14
U15B DM7407-SOIC14
U15C DM7407-SOIC14
U15D DM7407-SOIC14
U15E DM7407-SOIC14
U3_X
GAL
PALCE16V8-10-PLCC20-5V
JFP1
D2x5-1:1-BK
JFP2
D2x4-1:8-BK
RN127
JWR1
ATX-D2x10
FOR EMI ONLY
MUST BE CLOSED TO POWER CONNECTOR
Title
MS-6713
Size
Document Number
{Doc}
Rev
0A
Date: Friday, August 16, 2002
Sheet 29 of 30

Title	MS-6713	
Size	Document Number {Doc}	Rev 0A
Date: Monday, July 15, 2002	Sheet 30 of 30	