MS-6712F1

Version 2.0B
11/04/2002 Update

VIA (R) KT400 VT8377 Chipset
Palamino/Mogan 462pin cPGA Processor Schematics

***AMD PGA 462 Processor**
***VIA KT400 / VT8235 Chipset (DDR 400 / AGP 8X / VLink 8X)**
***Winbond 83697HF-VF LPC I/O**
***VT6103 Fast Ethernet 10 / 100**
***AC'97 Codec ALC202A/ALC650**
***USB 2.0 support (integrated into VT8235)**
***Jump Less support**

MS-6712F1 ver:2.0B

Option L BOM (with LAN)

SMT 5010		785
SMT 5020		19
DIP	60	72
Total		878

Standard BOM (without LAN)

SMT 5010		XXX
SMT 5020		XX
DIP	60	XX
Total		XXX

Title	Page
Cover Sheet	1
Block Diagram	2
GPIO SPEC	3
AMD 462 PGA Socket	4,5
Clock Synthesizer	6
KT400	7,8,9,10
System Memory	11,12,13
DDR Terminations	14
AGP SLOT	15
VT8235	16,17,18
PCI Connectors	19,20
CNR RISER / DLED	21
AC'97 Codec & Audio connector	22
ATA 66/100 Connectors	23
Ethernet LAN	24
Front USB Port & Rear USB Port	25
LPC I/O	26
H/W monitor;Fan; Thermal Protection	27
I/O Connectors	28
HIP 6302	29
CPU Ratio / Vcore / LED Setting	30
MS-5 ACPI POWER	31
Front Panel; PowerOK Circuit	32
BULK / Decoupling	33
HISTORY	34

Orcad Config	ERP BOM	Function Description	
6712F1-20B-L	601-6712-060	MS-6712F1 20B MSI Option:L	With LAN. Without CNR. MSI Standard
		MS-6712F1 20B MSI Standard	Without LAN. MSI Standard

Micro Star Restricted Secret

Title	*Cover Sheet*	Rev 20A
Document Number	*MS-6712*	

MICRO-STAR INT'L
No.69-1, De St, Jung-He City,
Taipei Hsien, Taiwan
http://www.msi.com.tw

Last Revision Date: Friday, November 08, 2002
Sheet 1 of 34

Block Diagram

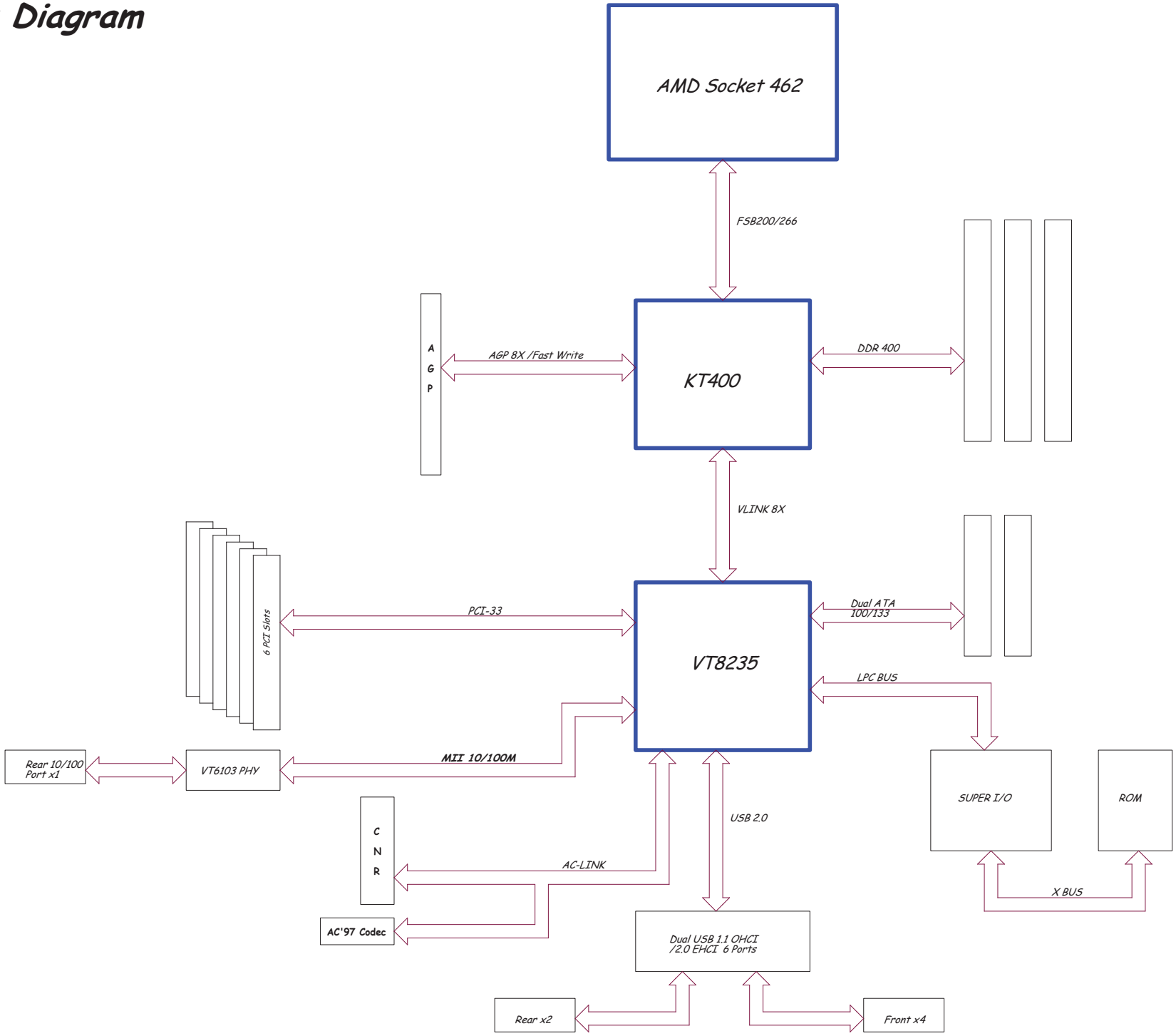

Micro Star Restricted Secret		
Title	Block Diagram	Rev 20A
Document Number	MS-6712	
MICRO-STAR INT'L No. 69-1, De St. Jung-He City, Taipei Hsien, Taiwan http://www.msi.com.tw	Last Revision Date: Friday, November 08, 2002 Sheet 2 of 34	

GPIO FUNCTION

VT8233 GPIO Function Define

PIN NAME	Function define
GPO0 (VSUS33)	GPO0
GPO1/SUSA#(VSUS33)	SUSA#
GPO2/SUSB#(VSUS33)	SUSB#
GPO3/SUSST1#(VSUS33)	SUSST1#
GPO4/SUSCLK(VSUS33)	SUSCLK
GPO5/CPUSTP#	CPUSTP#
GPO6/PCISTP#	PCISTP#
GPO7/SLP#	SLP#
GPO8/GPI8/IPBIN0	Exteranl Pull up to VCC3
GPO9/GPI9/IPBIN1	Exteranl Pull up to VCC3
GPO10/GPI10/IPBRDFR	GPI10(PRI_DOWN)
GPO11/GPI11/IPBRDCK	
GPO12/GPI12/IPBOUT0	GPO12
GPO13/GPI13/IPBOUT1	GPO13
GPO14/GPI14/IPBTDFR	GPO14
GPO15/GPI15/IPBTDCK	GPO15
GPO16/SA16/STRAP	CPU FID0 Strapping
GPO17/SA17/STRAP	CPU FID1 Strapping
GPO18/SA18/STRAP	CPU FID2 Strapping
GPO19/SA19/STRAP	CPU FID3 Strapping
GPO20/GPI20 /ACSDIN2/PCS0#/EI	GPO20
GPO21/GPI21/ACSDIN3 /PCS1#/SLPBTN#	GPO21
GPO22/GPI22/IOR#	GPO22
GPO23/GPI23/IOW#	GPO23
GPO24/GPI24/GPIOA	
GPO25/GPI25/GPIOC	
GPO26/GPI26/SMBDT2 (VSUS33)	SMBDATA2/Slave SMBUS
GPO27/GPI27/SMBCK2 (VSUS33)	SMBCLK2/Slave SMBUS
GPO28/GPI28/ APICD0/APICCS#	
GPO29/GPI29/ APICD1/APICACK#	
GPO30/GPI30/GPIOD	
GPO31/GPI31/GPIOE	

PIN NAME	Function define
GPI0	GPI0
GPI1	ATADET0=>Detect IDE1 ATA100/66
GPI2/EXTSMI#	EXTSMI#
GPI3/RING#	RING#
GPI4/LID#	ATADET1=>Detect IDE2 ATA100/66
GPI5/BATLOW#	Exteranl Pull up to 3VDUAL
GPI6/PME#	PME#
GPI7/SMBALRT#	Exteranl Pull up to 3VDUAL
GPI16/INTRUDER#	Exteranl Pull down
GPI17/CPUMISS	Exteranl Pull up to 3VDUAL
GPI18/AOLGP1/THRM#	THRM#
GPI19/IORDY	Exteranl Pull up to VCC3

DDR Voltage	SET1	SET2
2.5V	1	1
2.6V	0	1
2.7V	1	0
2.8V	0	0

PCI

DEVICES	INT#	IDSEL	REQ#/GNT#	CLOCK
PCI SLOT 1	INT#A INT#B INT#C INT#D	AD16	PREQ#1 PGNT#1	PCICLK1
PCI SLOT 2	INT#B INT#C INT#D INT#A	AD17	PREQ#2 PGNT#2	PCICLK2
PCI SLOT 3	INT#C INT#D INT#A INT#B	AD18	PREQ#3 PGNT#3	PCICLK3
PCI SLOT 4	INT#D INT#A INT#B INT#C	AD19	PREQ#4 PGNT#4	PCICLK4
PCI SLOT 5	INT#B INT#C INT#D INT#A	AD21	PREQ#5 PGNT#6	PCICLK5
PCI SLOT 6	INT#C INT#D INT#A INT#B	AD22	PREQ#0 PGNT#0	PCICLK6

SOCKET 462 Part 1

All CPU interface are 2.5V tolerant

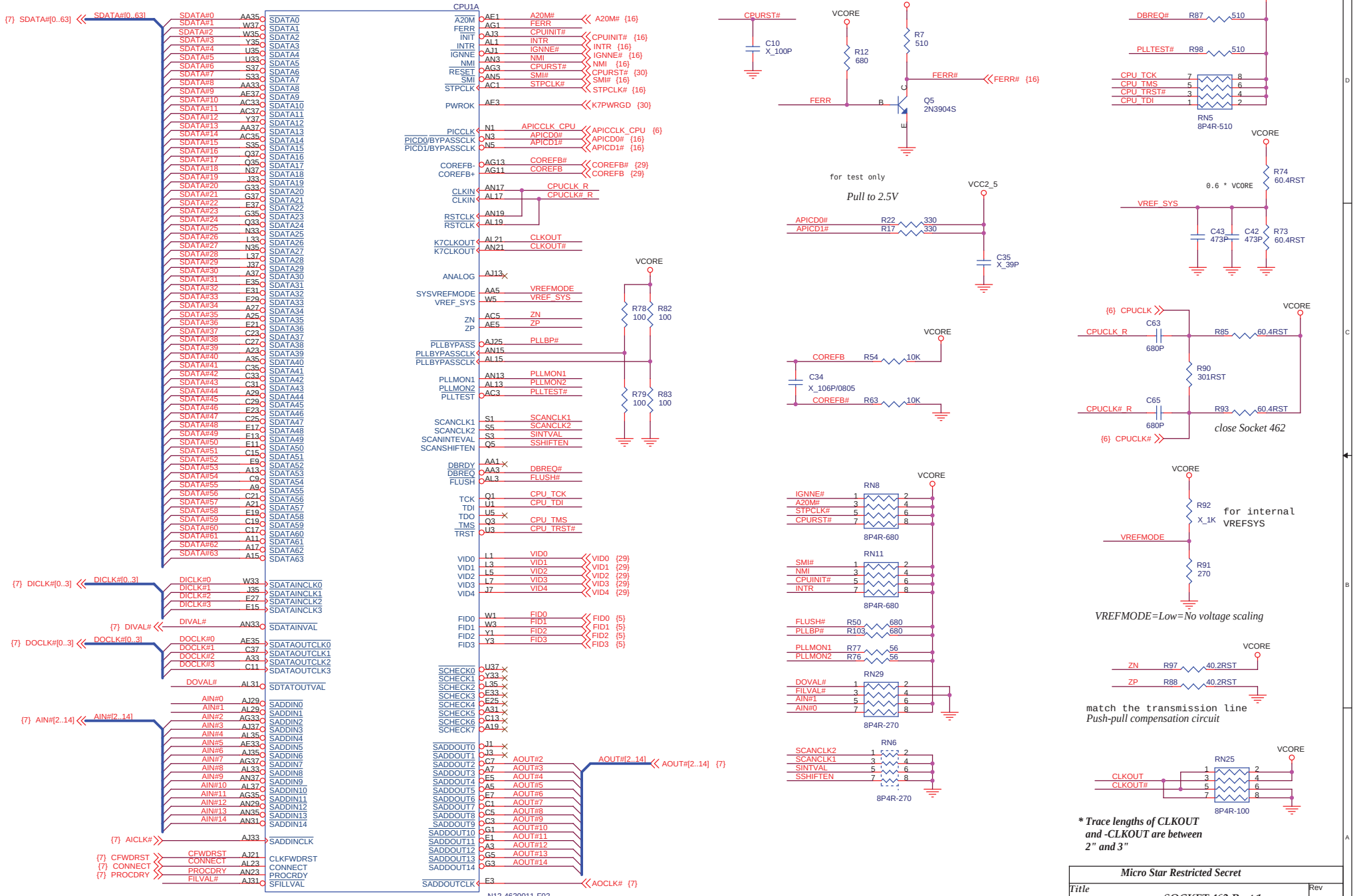

Micro Star Restricted Secret	
Title: SOCKET 462 Part 1	Rev: 20A
Document Number: MS-6712	
MICRO-STAR INT'L CO., LTD. No 69, Li De St, Jung-He City, Taipei Hsien, Taiwan http://www.msi.com.tw	Last Revision Date: Friday, November 08, 2002
	Sheet 4 of 34

SOCKET 462 Part 2

Power supply from MS-5

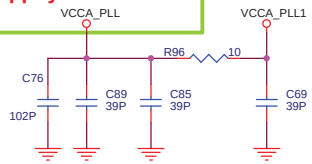

Used when spec. change

Max 150mA, Design for 100mA

VCCA_PLL trace length from the VR1 to the PGA must be 0.75".

Place al filters close to the PGA.

Keep all power and signal trce away from the VR1.

Place a cut in the GND plane around the VCCA_PLL regulator circuit.

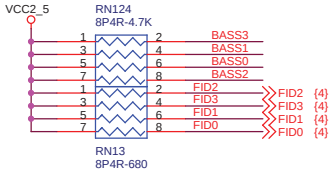

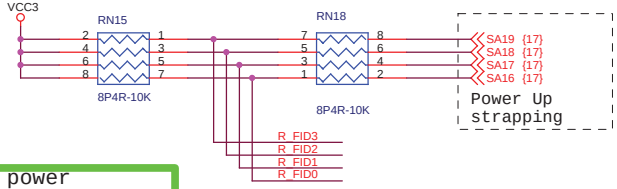

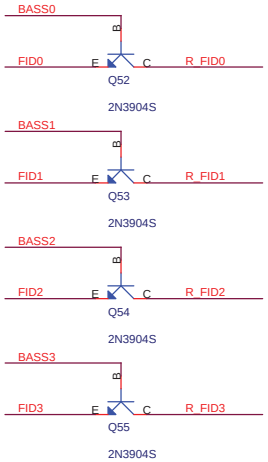

For 166MHz power strapping
SB and CLK Gen 166MHz strapping

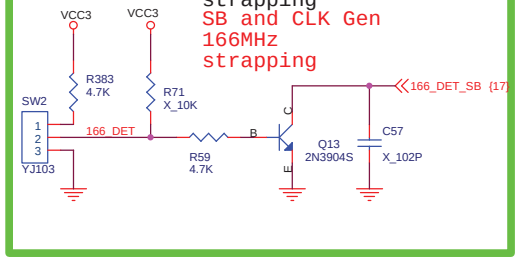

FID[3:0]	Clock Multiplier	FID[3:0]	Clock Multiplier
0000	11.0	1000	7.0
0001	11.5	1001	7.5
0010	12.0	1010	8.0
0011	12.5	1011	8.5
0100	5.0	1100	9.0
0101	5.5	1101	9.5
0110	6.0	1110	10.0
0111	6.5	1111	10.5

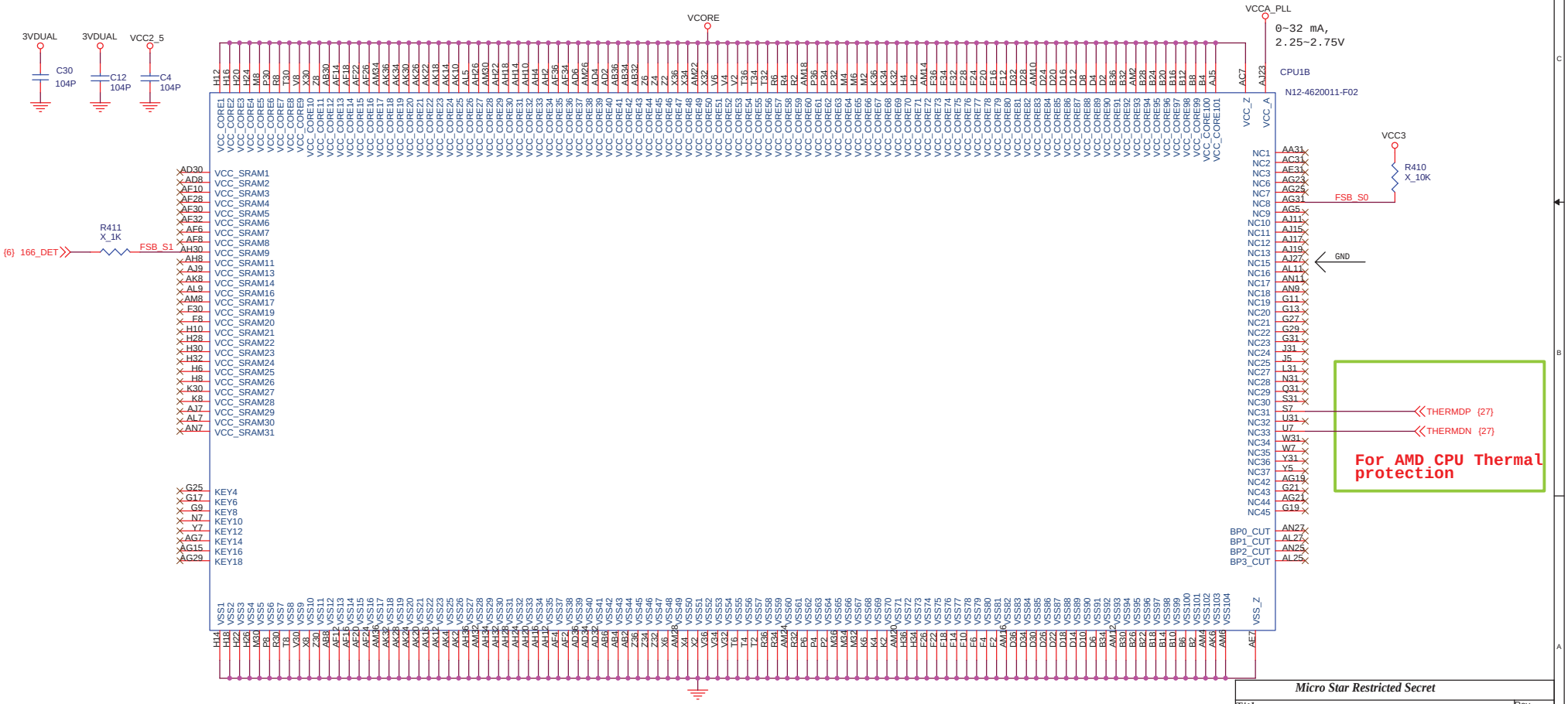

Micro Star Restricted Secret

Title	SOCKET 462 Part 2	Rev 20A
Document Number	MS-6712	
MICRO-STAR INT'L No. 69, Li De St, Jung-He City, Taipei Hsien, Taiwan http://www.msi.com.tw	Last Revision Date: Friday, November 08, 2002	Sheet 5 of 34

Clock Synthesizer

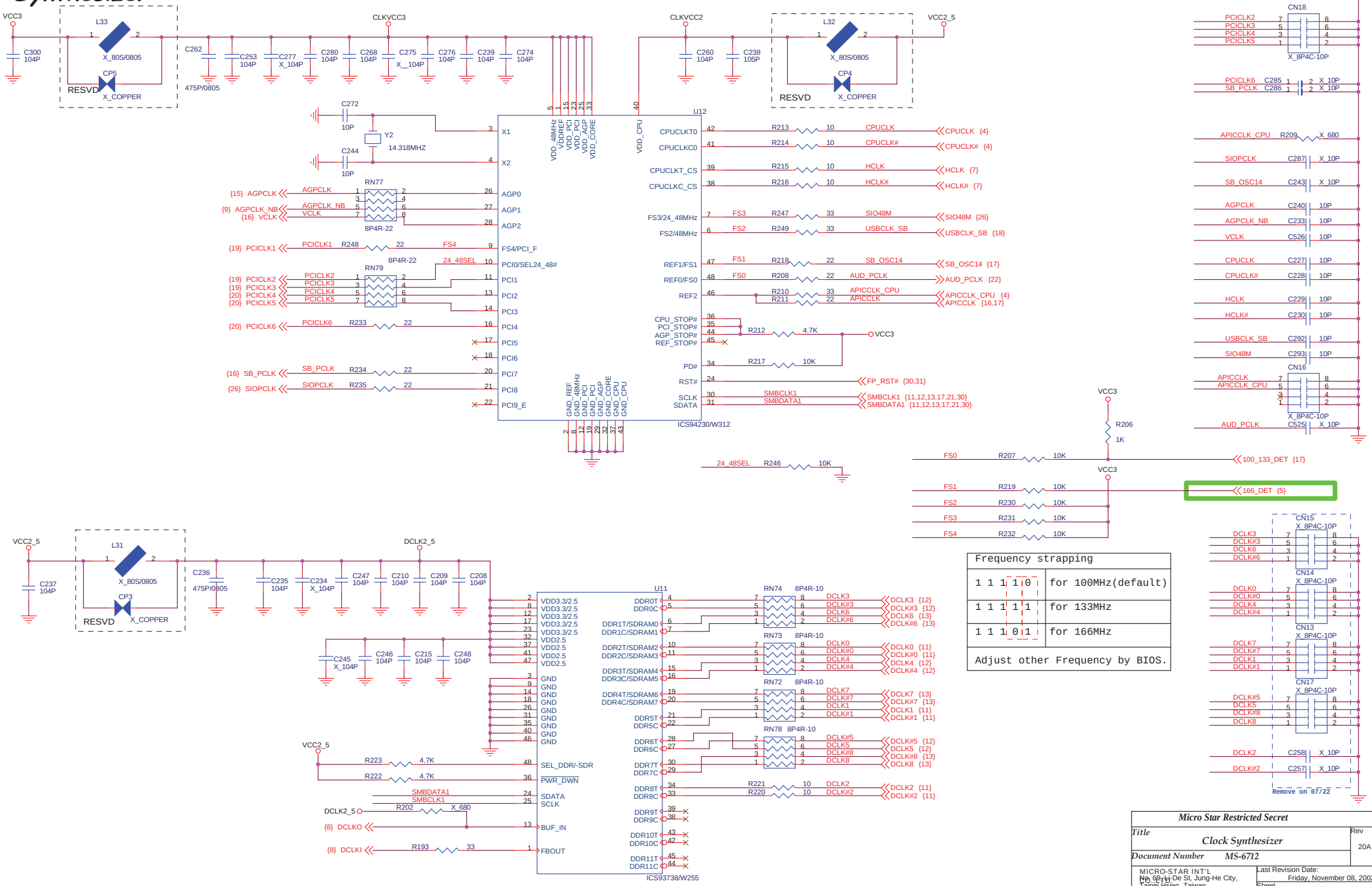

Frequency strapping	
1 1 1 1 0	for 100MHz(default)
1 1 1 1 1	for 133MHz
1 1 1 0 1	for 166MHz
Adjust other Frequency by BIOS.	

Micro Star Restricted Secret		
Title: Clock Synthesizer		Rev: 20A
Document Number: MS-6712		
MICRO-STAR INT'L No 69-1, Li-De St, Jung-He City, Taipei Hsien, Taiwan http://www.msi.com.tw	Last Revision Date: Friday, November 08, 2002 Sheet 6 of 34	

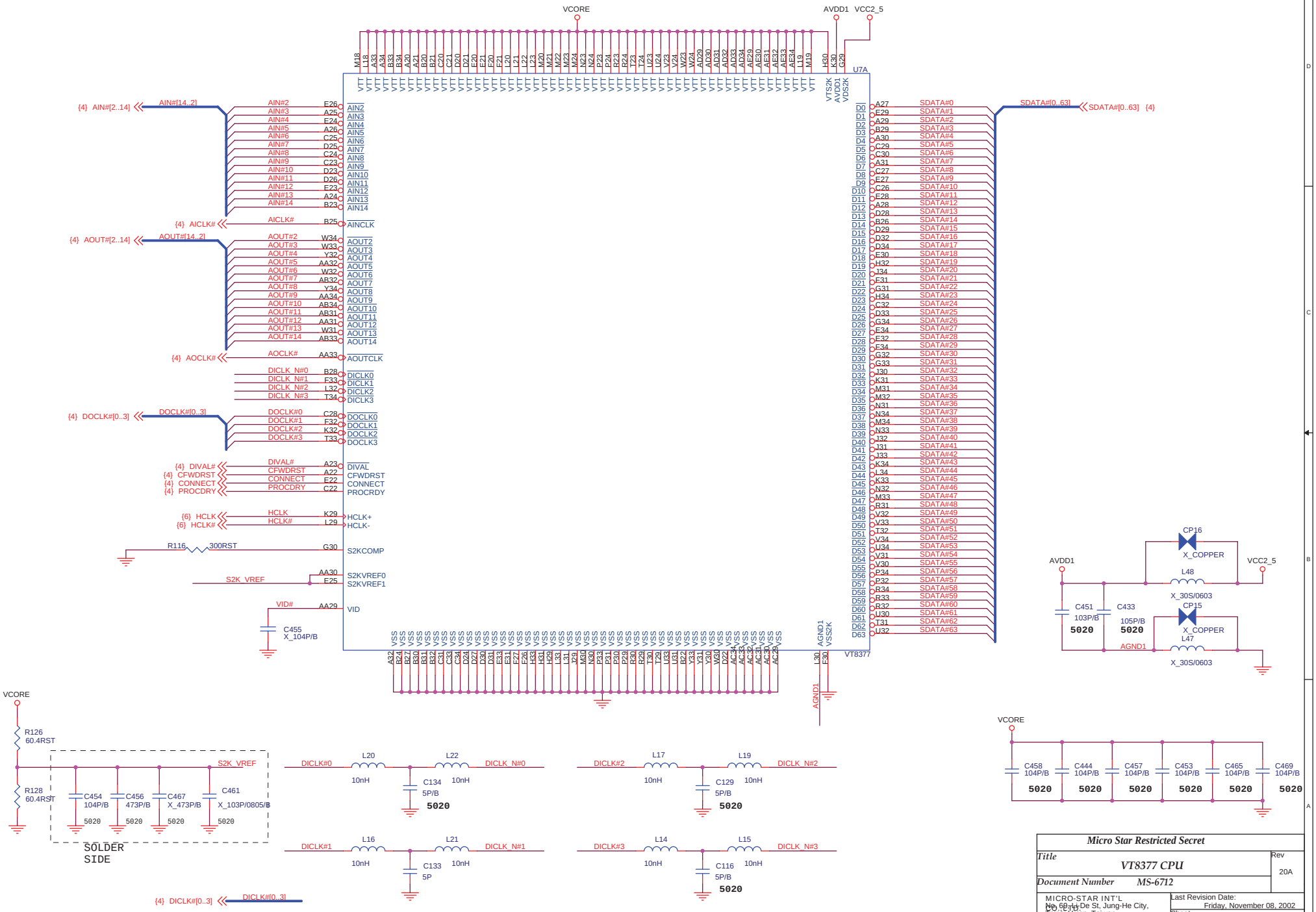

Micro Star Restricted Secret

Title	VT8377 CPU	Rev 20A
Document Number	MS-6712	
MICRO-STAR INT'L No. 69-1, De St, Jung-He City, Taipei Hsien, Taiwan http://www.msi.com.tw	Last Revision Date: Friday, November 08, 2002 Sheet 7 of 34	

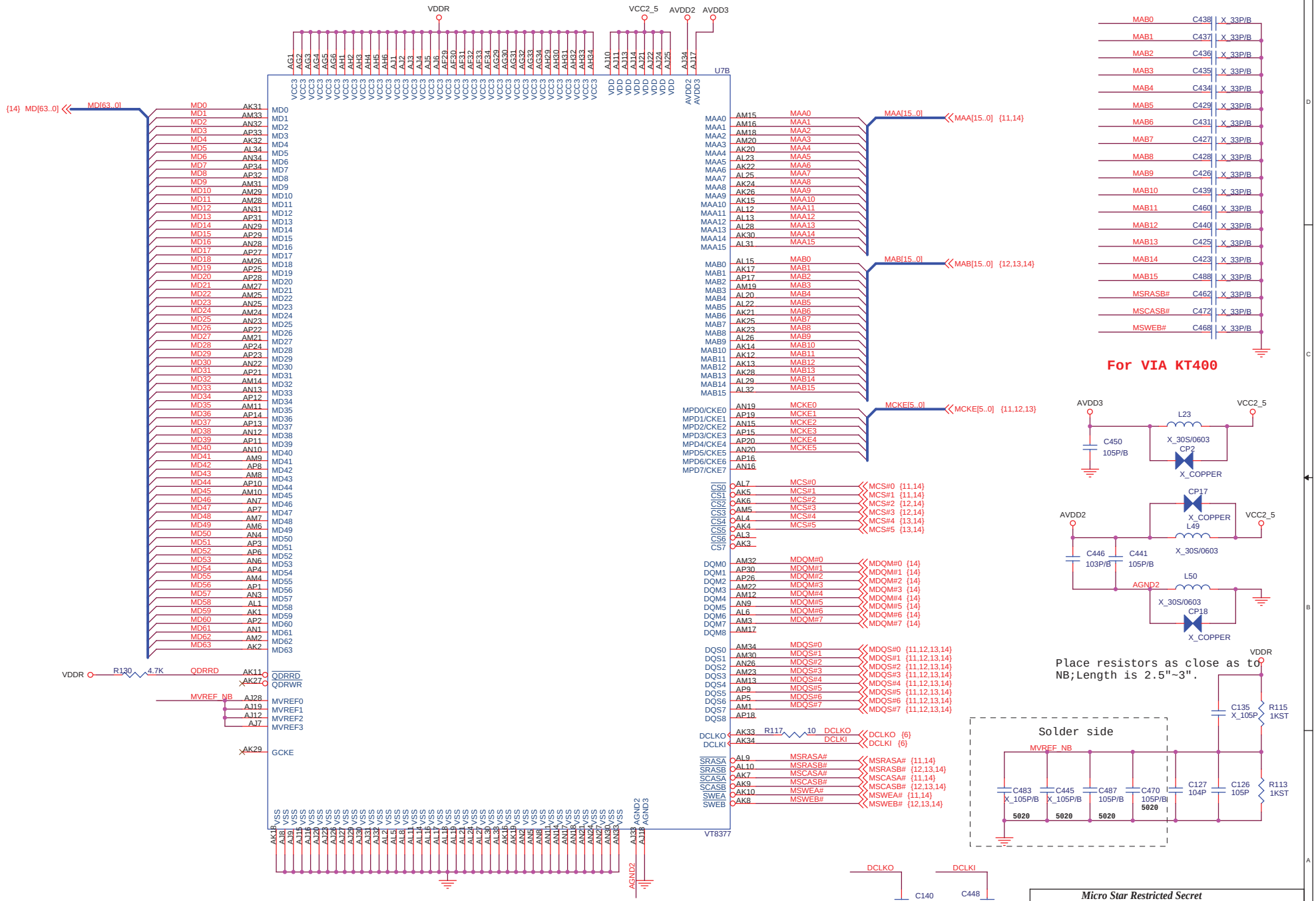
U7B
VT8377
VDDR
VCC2_5
AVDD2
AVDD3
{14} MD[63..0]
MD[63..0]
MAA[15..0]
MAB[15..0]
MCKE[5..0]
MAA[15..0] {11,14}
MAB[15..0] {12,13,14}
MCKE[5..0] {11,12,13}
MAB0 C438 X_33P/B
MAB1 C437 X_33P/B
MAB2 C436 X_33P/B
MAB3 C435 X_33P/B
MAB4 C434 X_33P/B
MAB5 C429 X_33P/B
MAB6 C431 X_33P/B
MAB7 C427 X_33P/B
MAB8 C428 X_33P/B
MAB9 C426 X_33P/B
MAB10 C439 X_33P/B
MAB11 C460 X_33P/B
MAB12 C440 X_33P/B
MAB13 C425 X_33P/B
MAB14 C423 X_33P/B
MAB15 C488 X_33P/B
MSRASB# C462 X_33P/B
MSCASB# C472 X_33P/B
MSWEB# C468 X_33P/B
For VIA KT400
L23 X_30S/0603
C450 105P/B
CP2 X_COPPER
CP17 X_COPPER
L49 X_30S/0603
C446 103P/B
C441 105P/B
L50 X_30S/0603
CP18 X_COPPER
AGND2
R130 4.7K
QDRRD
QDRWR
MVREF_NB
MVREF0
MVREF1
MVREF2
MVREF3
GCKE
R117 10
DCLKO {6}
DCLKI {6}
MSRASA# {11,14}
MSRASB# {12,13,14}
MSCASA# {11,14}
MSCASB# {12,13,14}
MSWEA# {11,14}
MSWEB# {12,13,14}
MDQS#0 {11,12,13,14}
MDQS#1 {11,12,13,14}
MDQS#2 {11,12,13,14}
MDQS#3 {11,12,13,14}
MDQS#4 {11,12,13,14}
MDQS#5 {11,12,13,14}
MDQS#6 {11,12,13,14}
MDQS#7 {11,12,13,14}
MDQM#0 {14}
MDQM#1 {14}
MDQM#2 {14}
MDQM#3 {14}
MDQM#4 {14}
MDQM#5 {14}
MDQM#6 {14}
MDQM#7 {14}
MCS#0 {11,14}
MCS#1 {11,14}
MCS#2 {12,14}
MCS#3 {12,14}
MCS#4 {13,14}
MCS#5 {13,14}
Place resistors as close as to NB;Length is 2.5"~3".
C135 X_105P
R115 1KST
R113 1KST
Solder side
MVREF_NB
C483 X_105P/B 5020
C445 X_105P/B 5020
C487 105P/B 5020
C470 105P/B 5020
C127 104P
C126 105P
C140 X_5P
C448 X_20P
Place as close as to VT8366
Micro Star Restricted Secret
Title
VT8377 Memory
Rev
20A
Document Number
MS-6712
MICRO-STAR INT'L
No. 69-1, Li De St, Jung-He City, Taipei Hsien, Taiwan
http://www.msi.com.tw
Last Revision Date:
Friday, November 08, 2002
Sheet
8 of 34

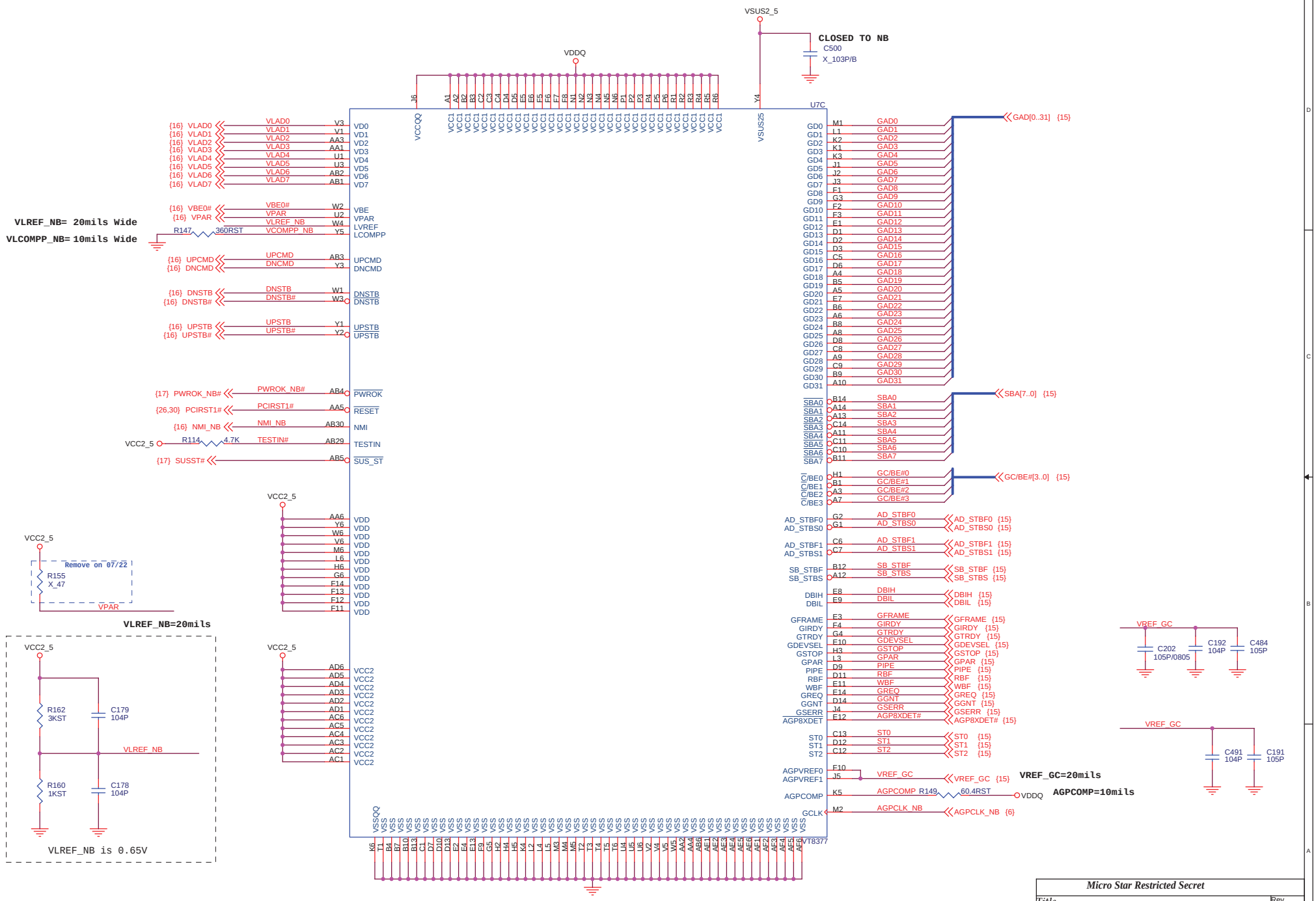

Micro Star Restricted Secret

Title	VT8377 AGP	Rev 20A
Document Number	MS-6712	
MICRO-STAR INT'L No 69-1 De St, Jung-He City, Taipei Hsien, Taiwan http://www.msi.com.tw	Last Revision Date: Friday, November 08, 2002 Sheet 9 of 34	

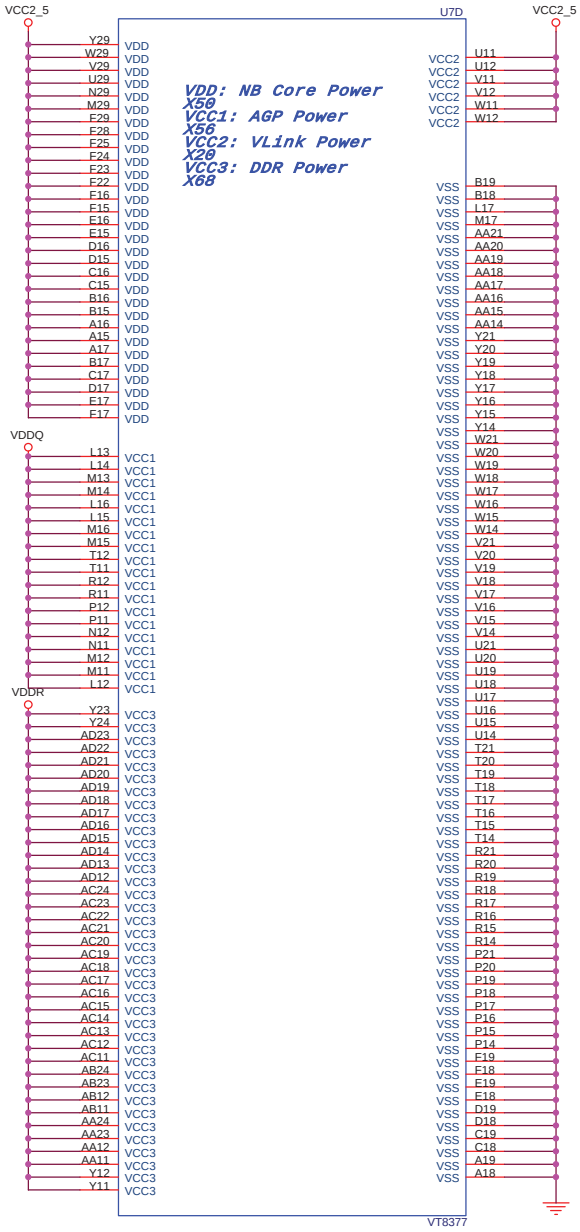

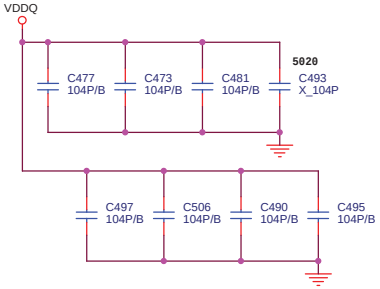

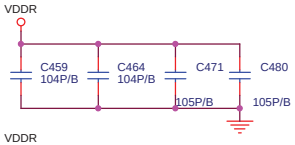

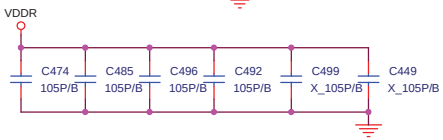

close to KT400 power pin

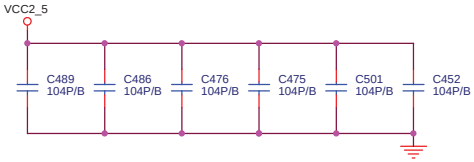

Micro Star Restricted Secret		
Title	*VT8377 POWER*	Rev 20A
Document Number	*MS-6712*	
MICRO-STAR INT'L No.69-1, De St, Jung-He City, Taipei Hsien, Taiwan http://www.msi.com.tw	Last Revision Date: Friday, November 08, 2002 Sheet 10 of 34	

SYSTEM MEMORY

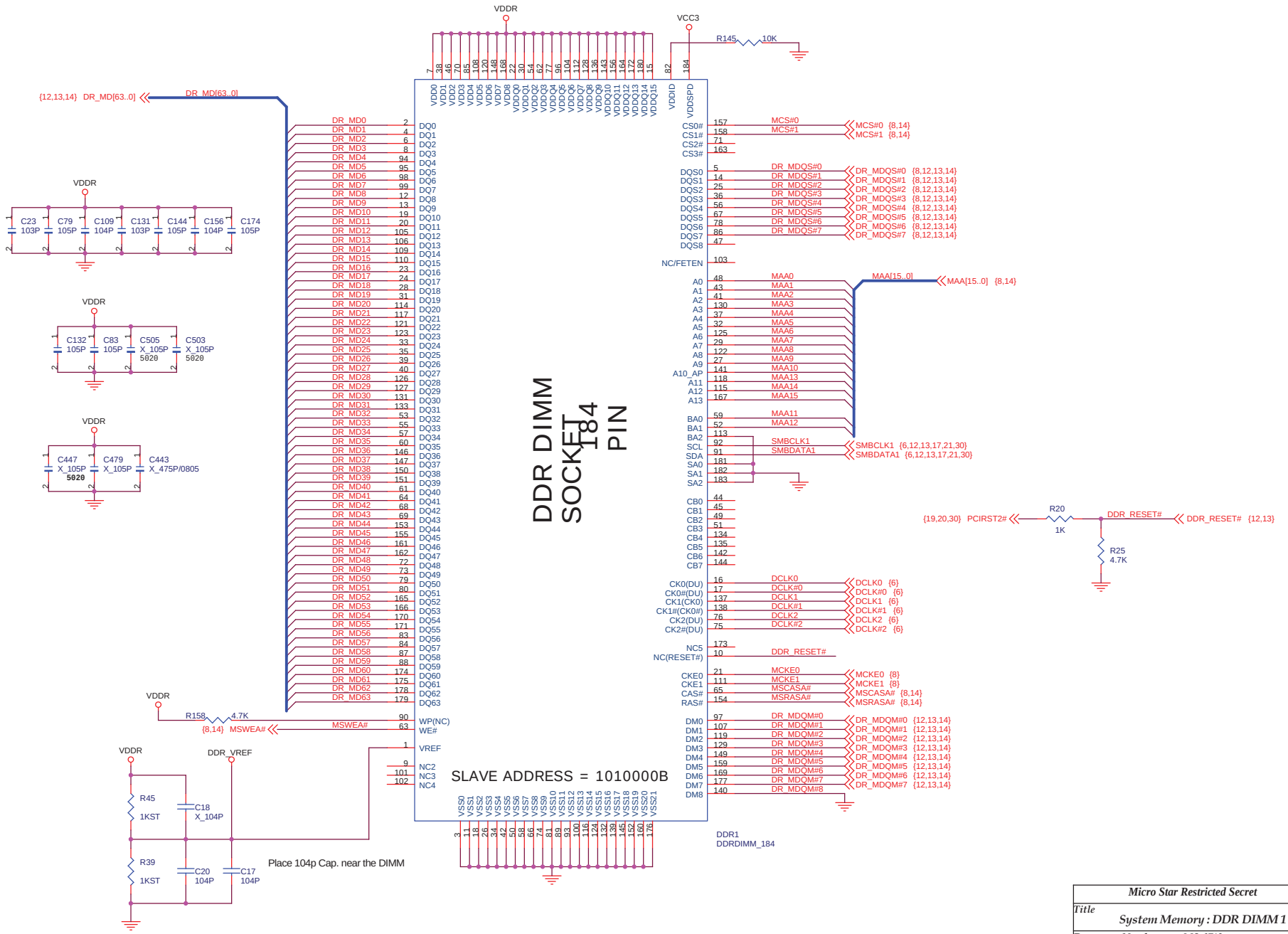

Micro Star Restricted Secret	
Title: System Memory : DDR DIMM 1	Rev: 20A
Document Number: MS-6712	
MICRO-STAR INT'L CO., LTD. No 69, Li De St, Jung-He City, Taipei Hsien, Taiwan http://www.msi.com.tw	Last Revision Date: Friday, November 08, 2002
	Sheet 11 of 34

SYSTEM MEMORY

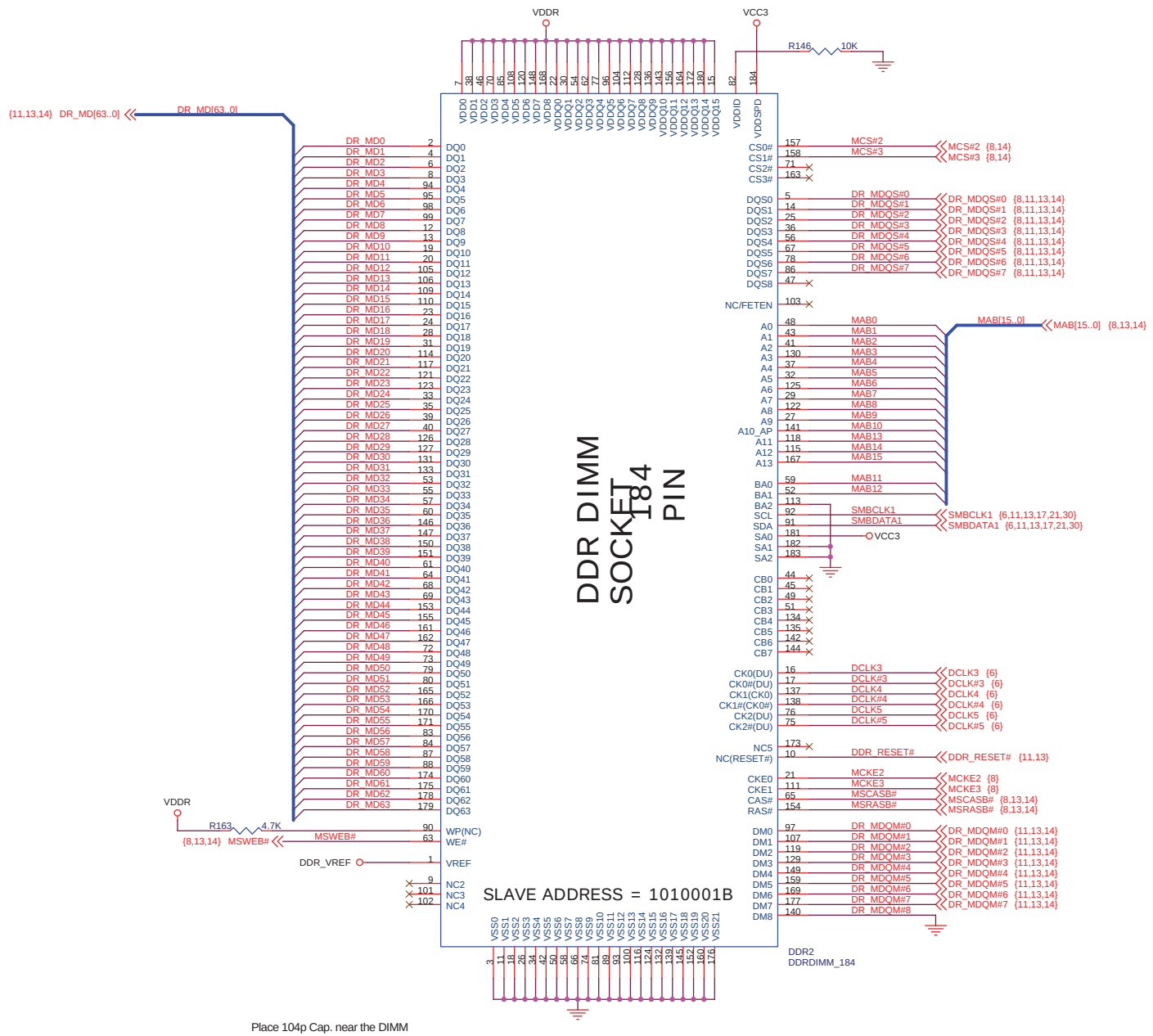

Place 104p Cap. near the DIMM

Micro Star Restricted Secret		
Title: System Memory : DDR DIMM 2		Rev: 20A
Document Number: MS-6712		
MICRO-STAR INT'L CO., LTD. No 69-1 De St, Jung-He City, Taipei Hsien, Taiwan http://www.msi.com.tw	Last Revision Date: Friday, November 08, 2002	Sheet 12 of 34

SYSTEM MEMORY

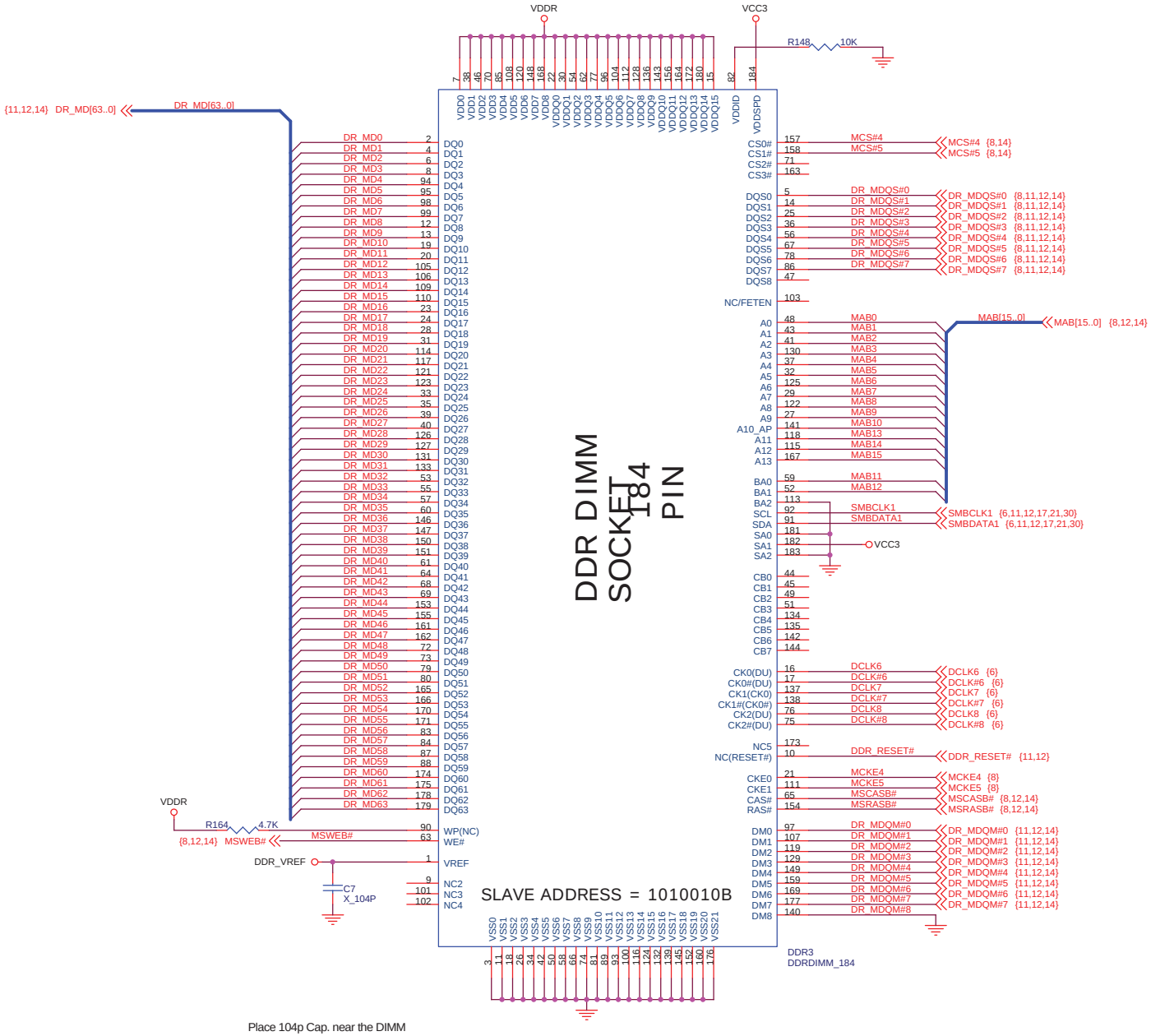

Micro Star Restricted Secret		
Title: System Memory : DDR DIMM 3		Rev: 20A
Document Number: MS-6712		
MICRO-STAR INT'L No. 69-1, De St, Jung-He City, Taipei Hsien, Taiwan http://www.msi.com.tw	Last Revision Date: Friday, November 08, 2002 Sheet 13 of 34	

DDR Terminations

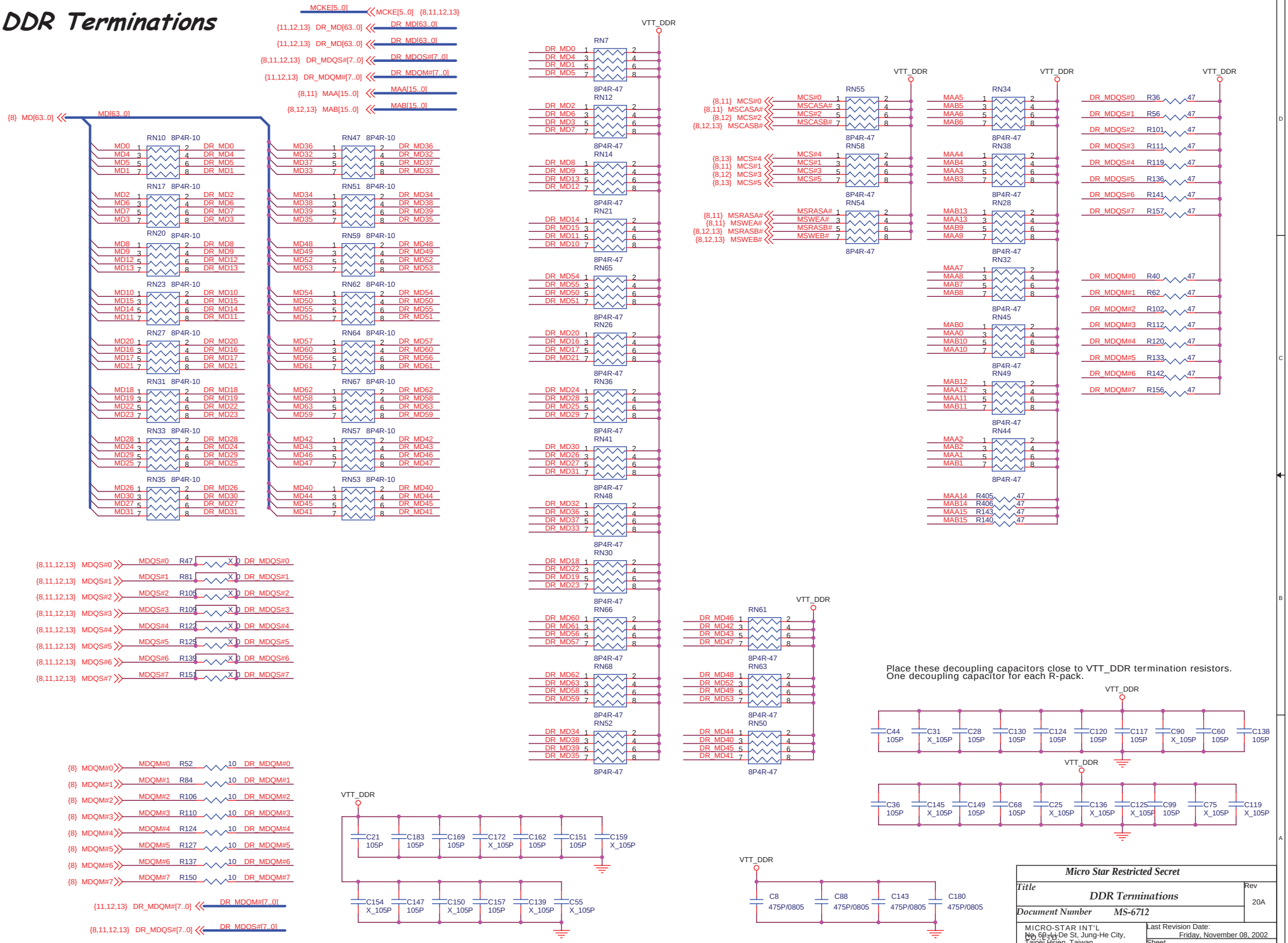

Micro Star Restricted Secret

Title	DDR Terminations	Rev 20A
Document Number	MS-6712	

MICRO-STAR INT'L CO., LTD.
No 69, Li De St, Jung-He City, Taipei Hsien, Taiwan
http://www.msi.com.tw

Last Revision Date: Friday, November 08, 2002

Sheet 14 of 34

AGP PRO Connector

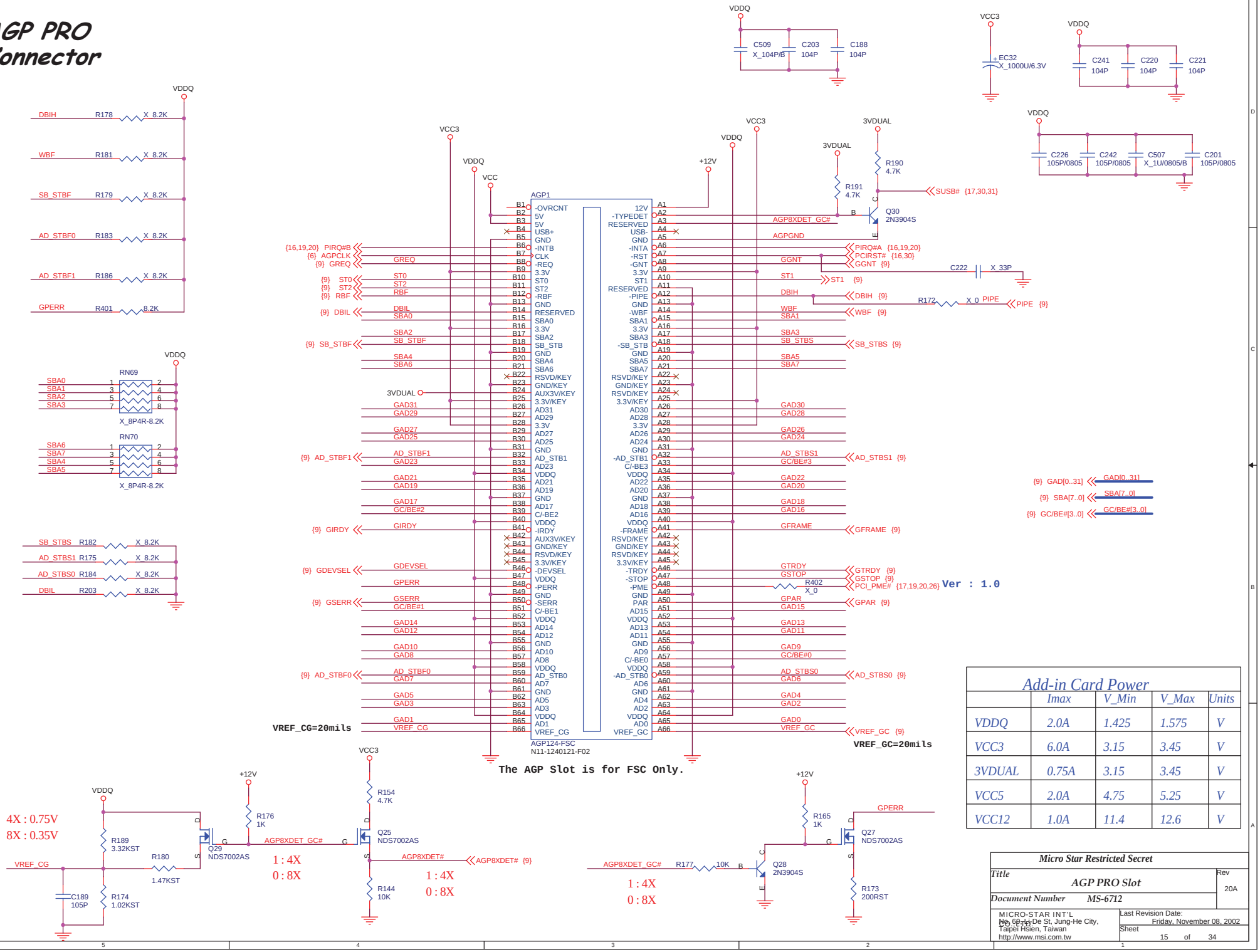

Add-in Card Power

	Imax	V_Min	V_Max	Units
VDDQ	2.0A	1.425	1.575	V
VCC3	6.0A	3.15	3.45	V
3VDUAL	0.75A	3.15	3.45	V
VCC5	2.0A	4.75	5.25	V
VCC12	1.0A	11.4	12.6	V

Micro Star Restricted Secret

Title	AGP PRO Slot	Rev 20A
Document Number	MS-6712	

MICRO-STAR INT'L
No 69-1 Ta De St, Jung-He City, Taipei Hsien, Taiwan
http://www.msi.com.tw

Last Revision Date: Friday, November 08, 2002

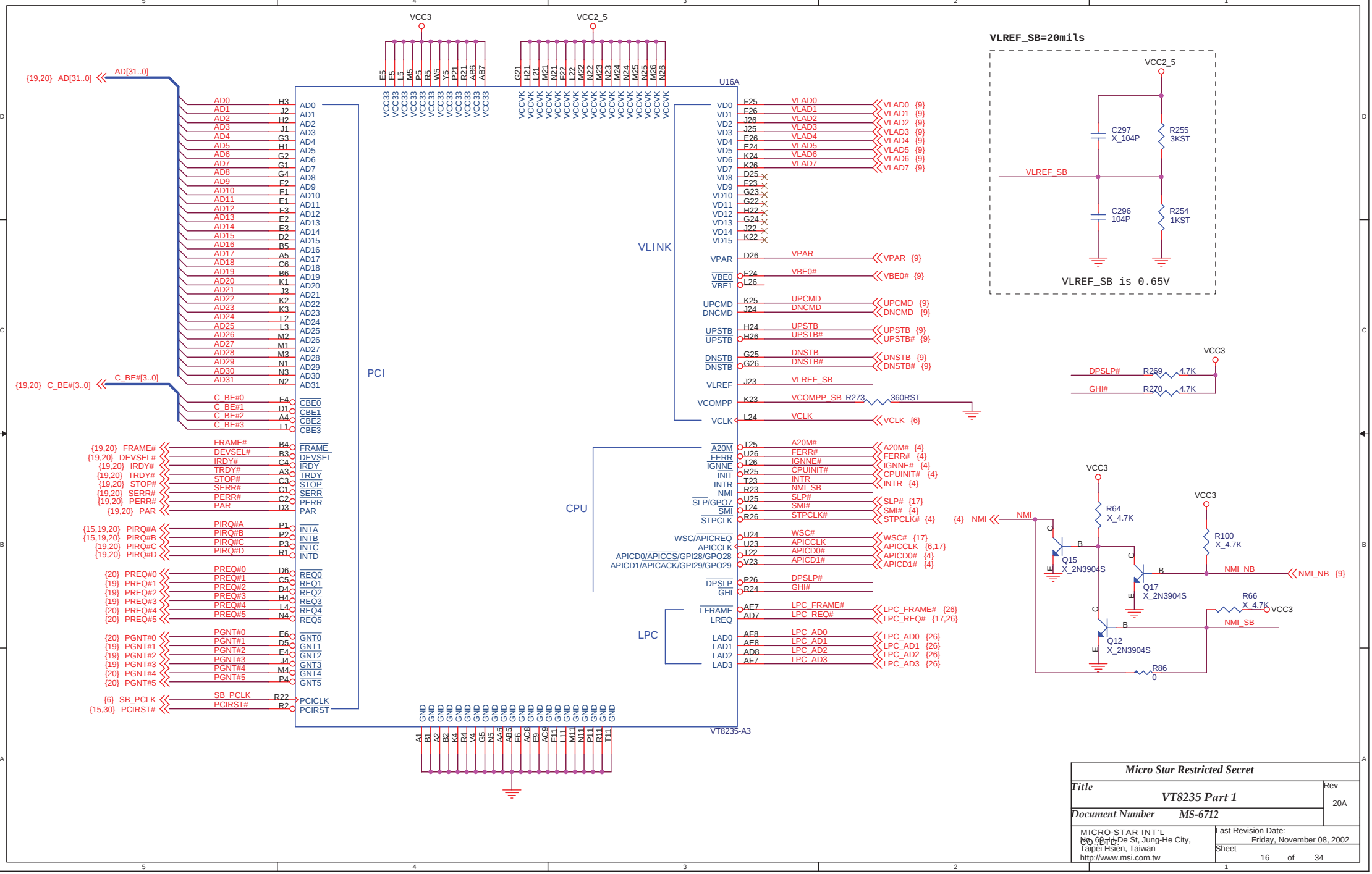

Micro Star Restricted Secret

Title	VT8235 Part 1	Rev 20A
Document Number	MS-6712	

MICRO-STAR INT'L CO.,LTD
No.69-1,De St, Jung-He City, Taipei Hsien, Taiwan
http://www.msi.com.tw

Last Revision Date: Friday, November 08, 2002

Sheet 16 of 34

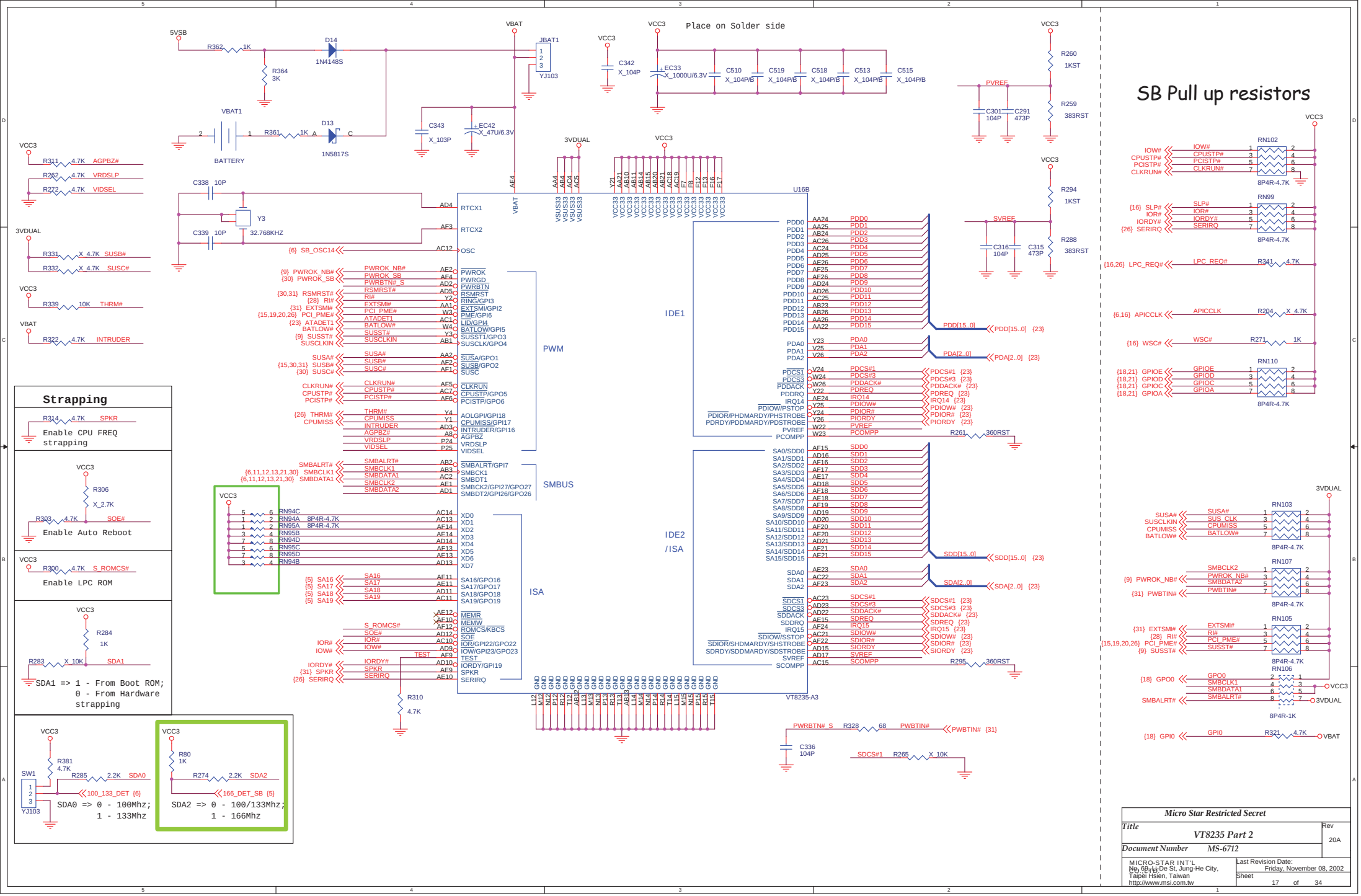
Place on Solder side
SB Pull up resistors
U16B
VT8235-A3
IDE1
IDE2
/ISA
PWM
SMBUS
ISA
Strapping
Enable CPU FREQ strapping
Enable Auto Reboot
Enable LPC ROM
SDA1 => 1 - From Boot ROM; 0 - From Hardware strapping
SDA0 => 0 - 100Mhz; 1 - 133Mhz
SDA2 => 0 - 100/133Mhz; 1 - 166Mhz
Micro Star Restricted Secret
Title
VT8235 Part 2
Rev
20A
Document Number
MS-6712
MICRO-STAR INT'L
No. 69-1, De St, Jung-He City, Taipei Hsien, Taiwan
http://www.msi.com.tw
Last Revision Date:
Friday, November 08, 2002
Sheet
17 of 34

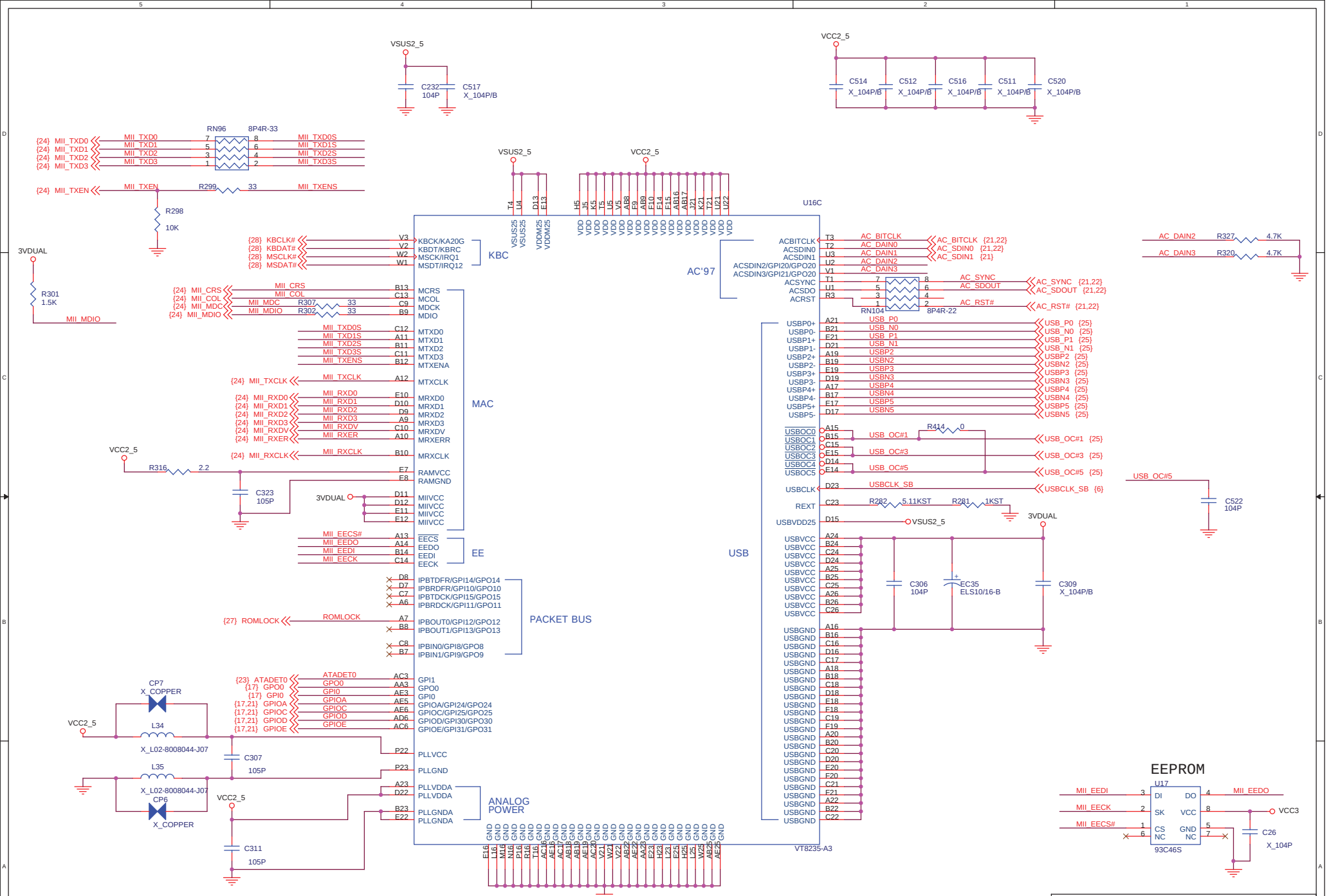

Micro Star Restricted Secret

Title	VT8235 Part 3	Rev 20A
Document Number	MS-6712	

MICRO-STAR INT'L
No. 69-1, De St, Jung-He City, Taipei Hsien, Taiwan
http://www.msi.com.tw

Last Revision Date: Friday, November 08, 2002

Sheet 18 of 34

PCI Connectors

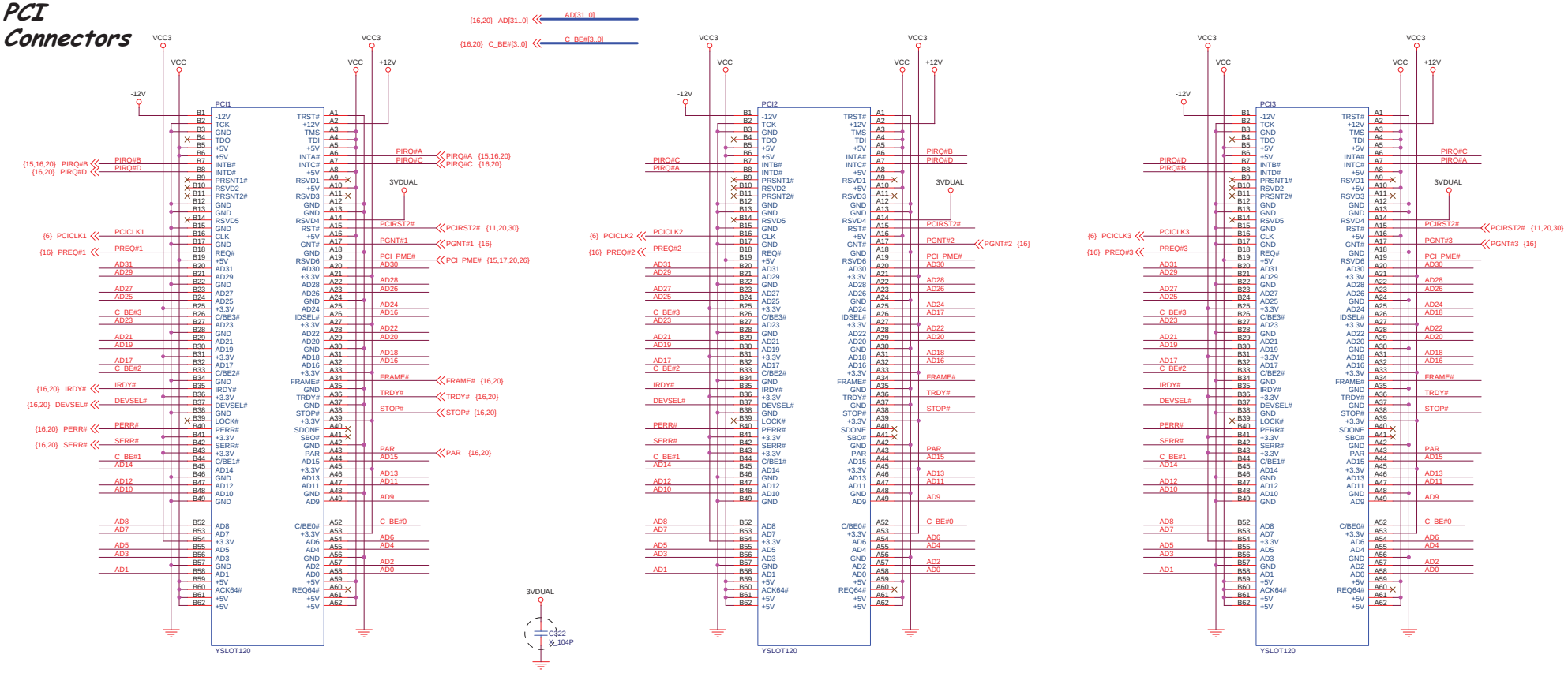

PCI BUS

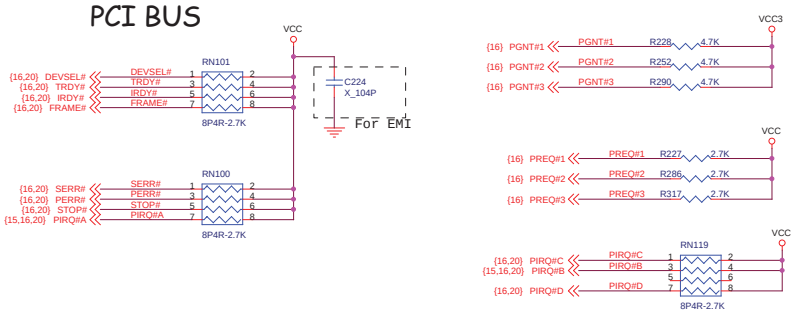

Micro Star Restricted Secret	
Title: PCI Connector 1 & 2 & 3	Rev: 20A
Document Number: MS-6712	
MICRO-STAR INT'L No 69,Lu De St, Jung-He City, Taipei Hsien, Taiwan http://www.msi.com.tw	Last Revision Date: Friday, November 08, 2002 Sheet 19 of 34

PCI Connectors

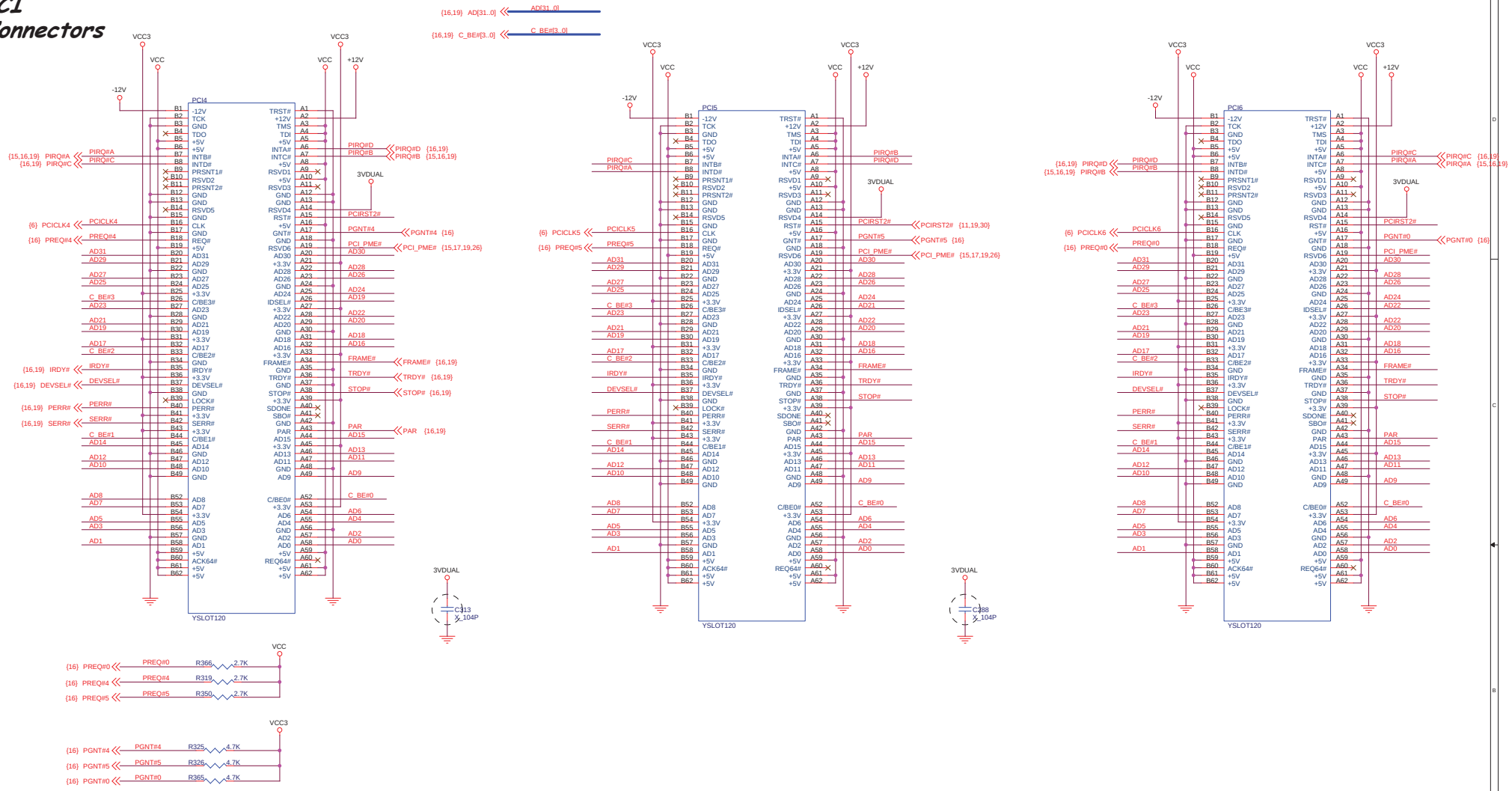

Micro Star Restricted Secret	
Title: PCI Connector 4 & 5 & 6	Rev: 20A
Document Number: MS-6712	
MICRO-STAR INT'L No.69,Li-De St, Jung-He City, Taipei Hsien, Taiwan http://www.msi.com.tw	Last Revision Date: Friday, November 08, 2002 Sheet 20 of 34

CNR Riser / DELD

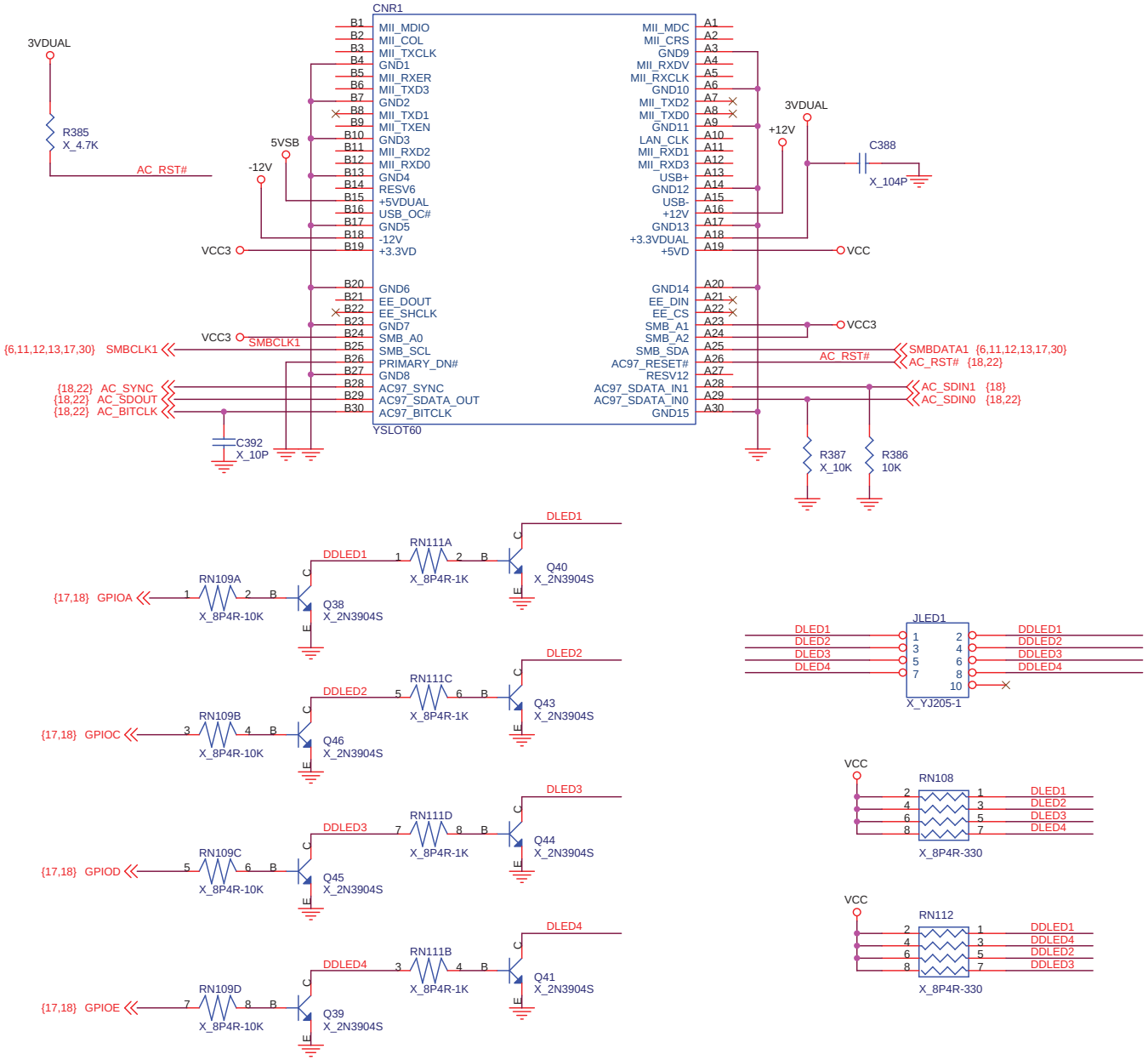

Micro Star Restricted Secret		
Title: CNR Riser		Rev: 20A
Document Number: MS-6712		
MICRO-STAR INT'L CO.,LTD. No.69-1,De St, Jung-He City, Taipei Hsien, Taiwan http://www.msi.com.tw	Last Revision Date: Friday, November 08, 2002	Sheet 21 of 34

AC201A/AC202A AC97 CODEC

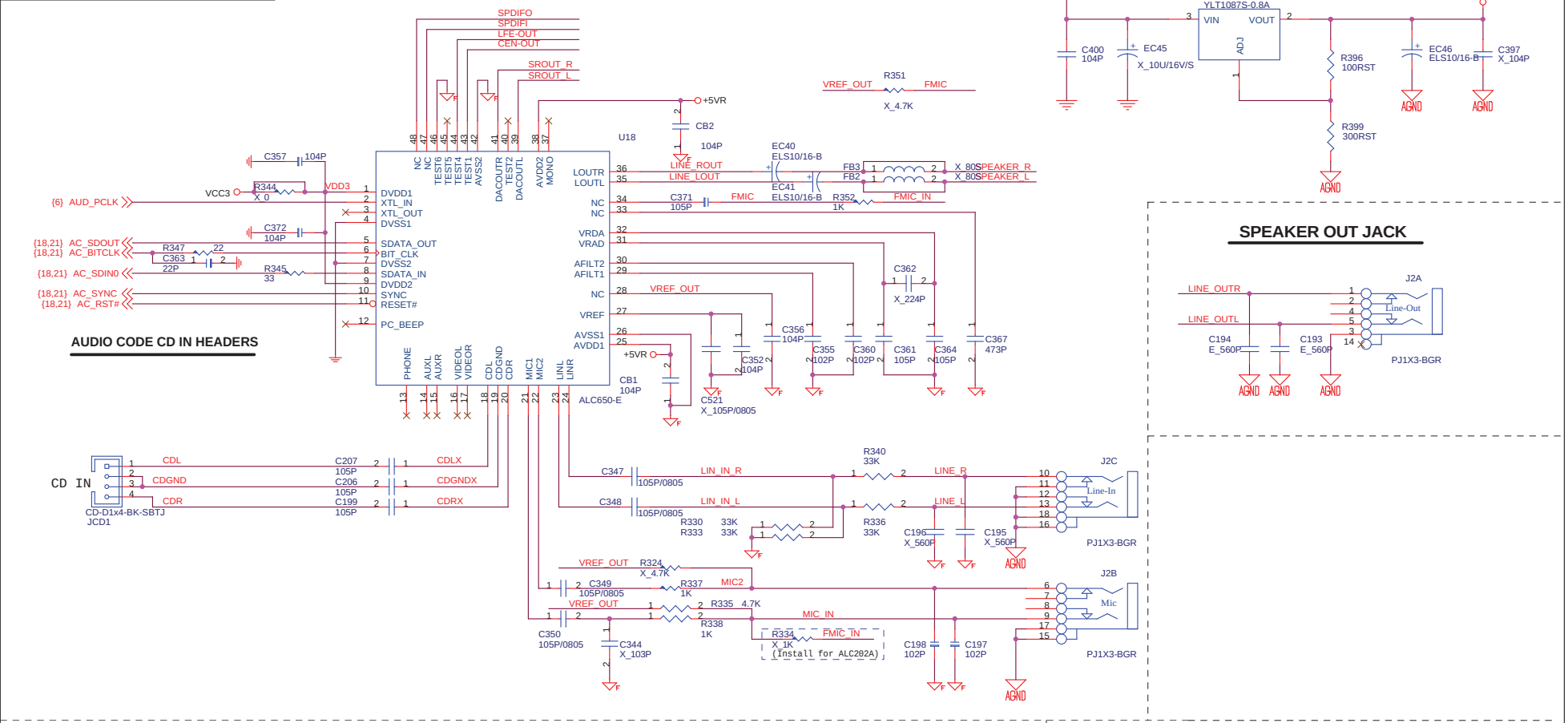

AUDIO CODE REGULATORS

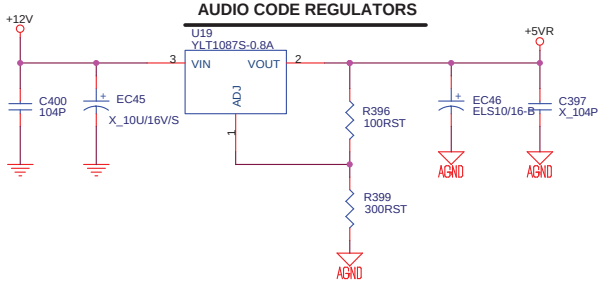

SPEAKER OUT JACK

AUDIO CODE CD IN HEADERS

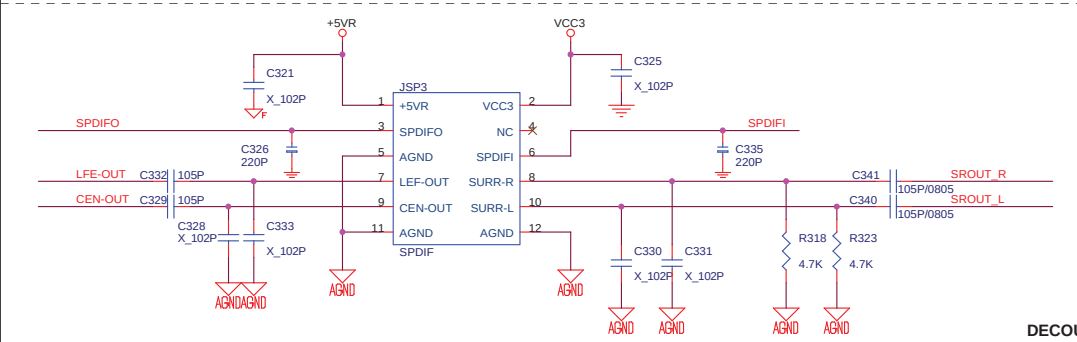

Intel Front Audio Connector

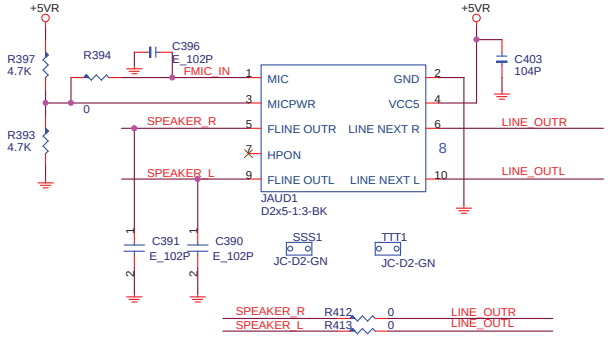

DECOUPLING CAPACITOR

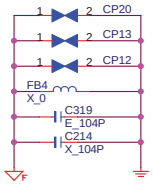

Micro Star Restricted Secret		
Title	*AC97 Codec ALC202A/650*	Rev 20A
Document Number	*MS-6712*	
MICRO-STAR INT'L No. 69-1, Li-De St, Jung-He City, Taipei Hsien, Taiwan http://www.msi.com.tw	Last Revision Date: Friday, November 08, 2002 Sheet 22 of 34	

ATA 33/66/100 Connector

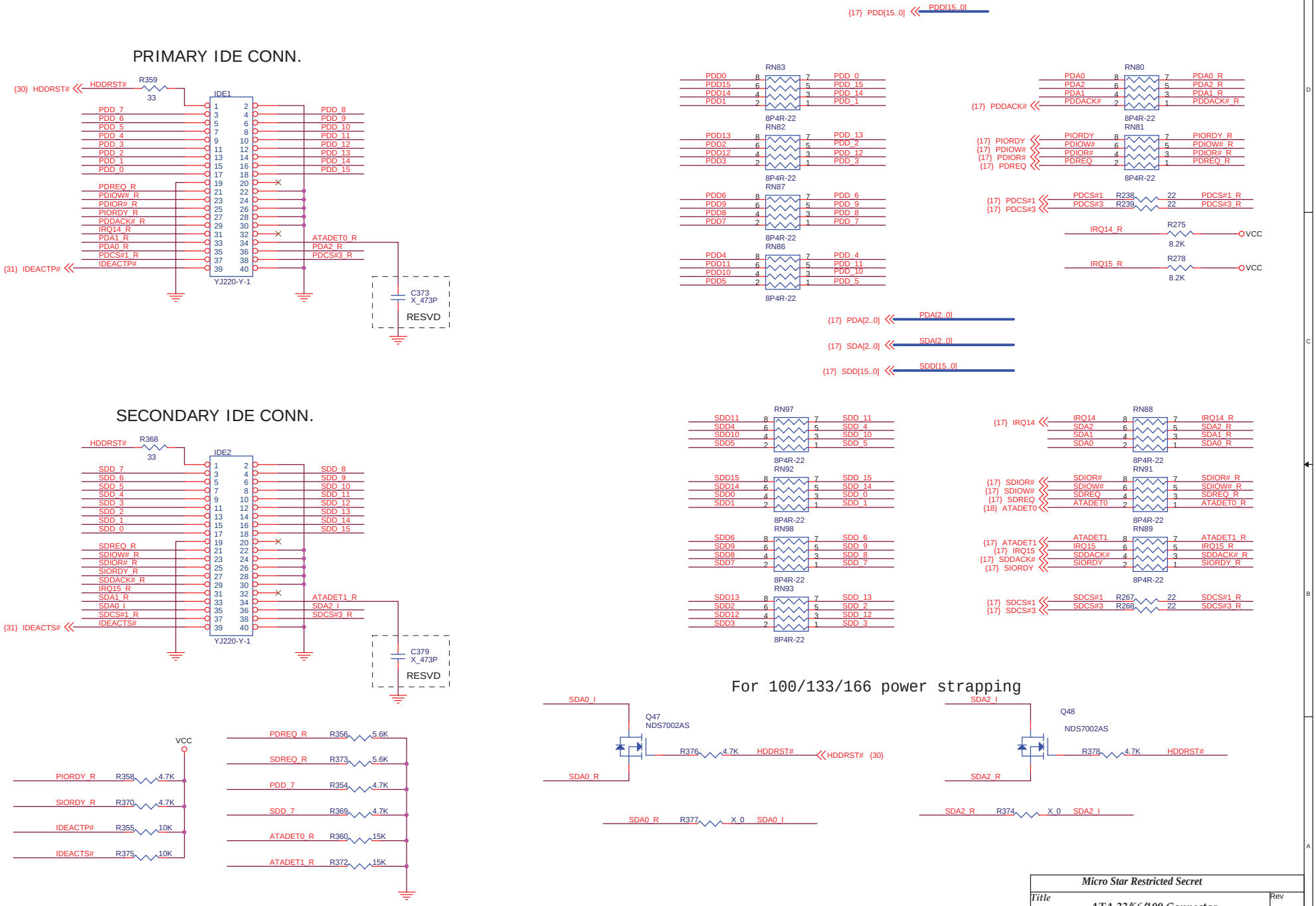

Micro Star Restricted Secret	
Title: ATA 33/66/100 Connector	Rev: 20A
Document Number: MS-6712	
MICRO-STAR INT'L No 69-1 Li De St, Jung-He City, Taipei Hsien, Taiwan http://www.msi.com.tw	Last Revision Date: Friday, November 08, 2002 Sheet 23 of 34

Fast Ethernet 1-Port PHY

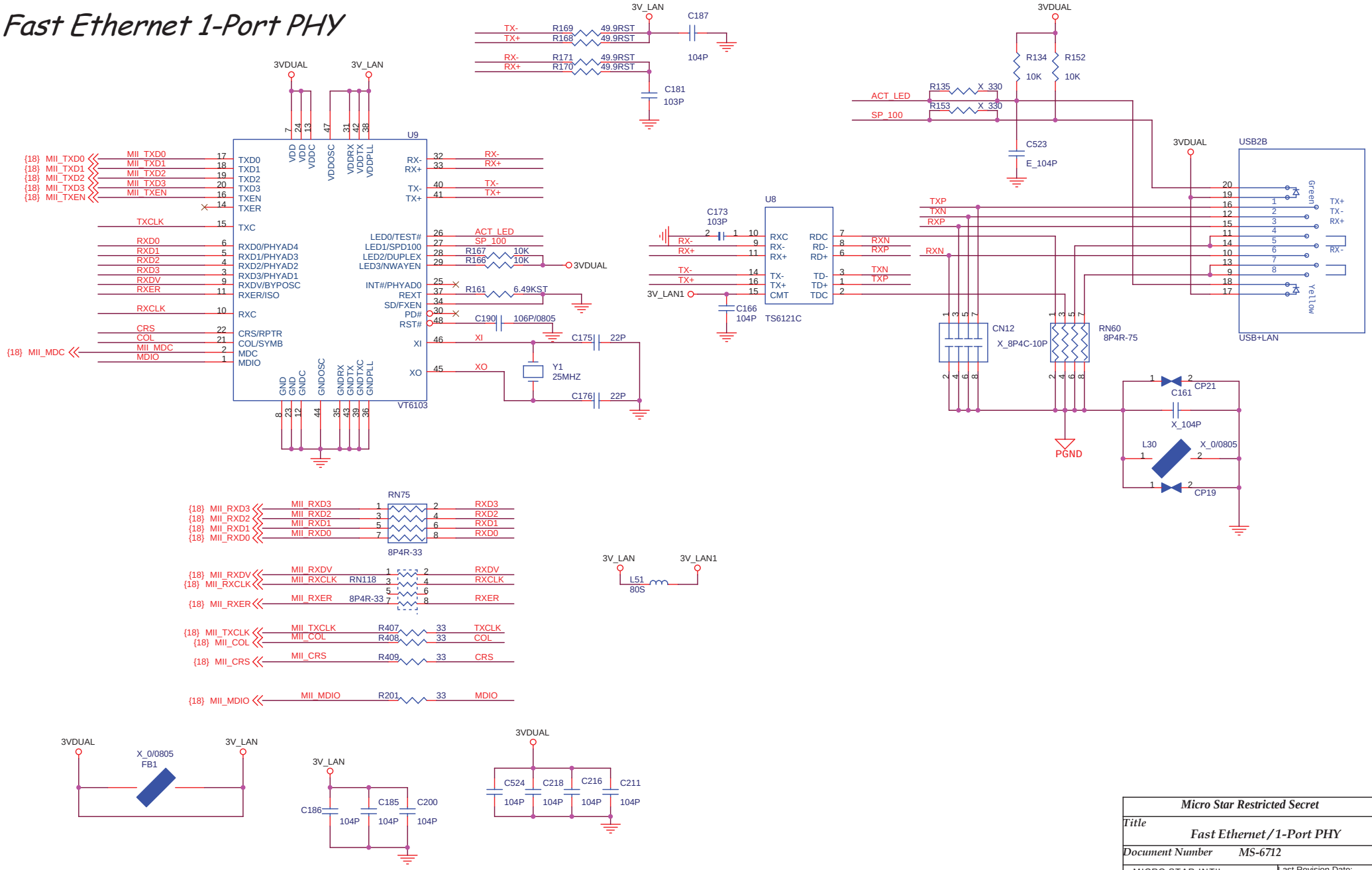

Micro Star Restricted Secret	
Title: Fast Ethernet/1-Port PHY	Rev: 20A
Document Number: MS-6712	
MICRO-STAR INT'L CO.,LTD. No.69,Li-De St, Jung-He City, Taipei Hsien, Taiwan http://www.msi.com.tw	Last Revision Date: Friday, November 08, 2002
	Sheet 24 of 34

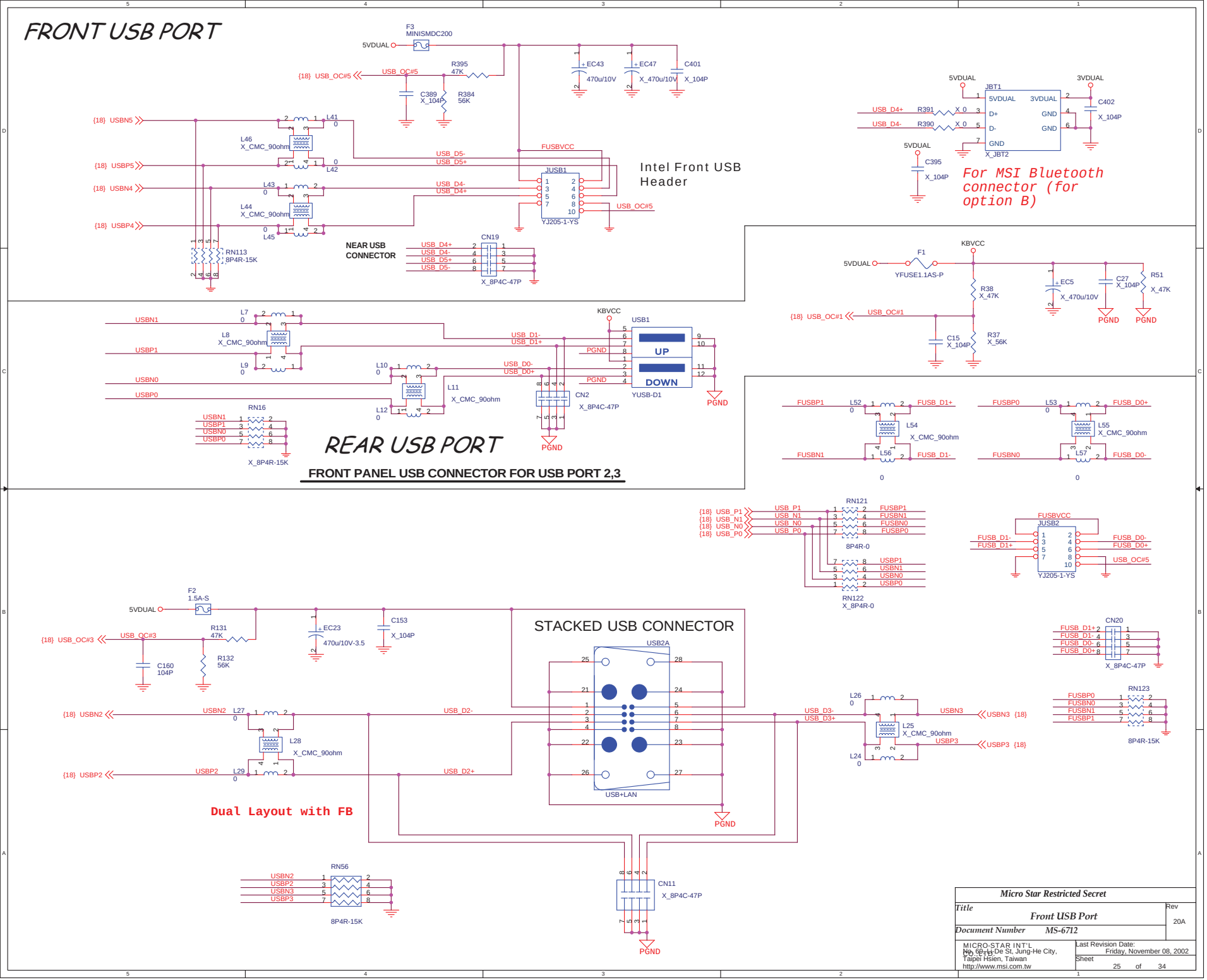
FRONT USB PORT
F3
MINISMDC200
5VDUAL
{18} USB_OC#5
USB_OC#5
R395
47K
C389
X_104P
R384
56K
EC43
470u/10V
EC47
X_470u/10V
C401
X_104P
{18} USBN5
{18} USBP5
{18} USBN4
{18} USBP4
L41
L46
X_CMC_90ohm
L42
L43
L44
X_CMC_90ohm
L45
RN113
8P4R-15K
FUSBVCC
USB_D5-
USB_D5+
USB_D4-
USB_D4+
JUSB1
YJ205-1-YS
Intel Front USB Header
NEAR USB CONNECTOR
CN19
X_8P4C-47P
5VDUAL
JBT1
3VDUAL
USB_D4+
USB_D4-
R391
R390
X_0
D+
D-
GND
X_JBT2
C402
X_104P
C395
X_104P
For MSI Bluetooth connector (for option B)
KBVCC
F1
YFUSE1.1AS-P
R38
X_47K
EC5
X_470u/10V
C27
X_104P
R51
X_47K
PGND
{18} USB_OC#1
USB_OC#1
C15
X_104P
R37
X_56K
USBN1
USBP1
USBN0
USBP0
L7
L8
X_CMC_90ohm
L9
L10
L11
X_CMC_90ohm
L12
USB_D1-
USB_D1+
USB_D0-
USB_D0+
USB1
UP
DOWN
YUSB-D1
CN2
X_8P4C-47P
RN16
X_8P4R-15K
REAR USB PORT
FRONT PANEL USB CONNECTOR FOR USB PORT 2,3
FUSBP1
L52
FUSB_D1+
L54
X_CMC_90ohm
FUSBN1
L56
FUSB_D1-
FUSBP0
L53
FUSB_D0+
L55
X_CMC_90ohm
FUSBN0
L57
FUSB_D0-
RN121
8P4R-0
RN122
X_8P4R-0
USB_P1
USB_N1
USB_N0
USB_P0
FUSBP1
FUSBN1
FUSBN0
FUSBP0
USBP1
USBN1
USBN0
USBP0
FUSBVCC
JUSB2
YJ205-1-YS
F2
1.5A-S
R131
47K
R132
56K
C160
104P
EC23
470u/10V-3.5
C153
X_104P
STACKED USB CONNECTOR
USB2A
USB+LAN
CN20
X_8P4C-47P
RN123
8P4R-15K
{18} USBN2
{18} USBP2
USBN2
USBP2
L27
L28
X_CMC_90ohm
L29
USB_D2-
USB_D2+
L26
L25
X_CMC_90ohm
L24
USB_D3-
USB_D3+
USBN3
USBP3
Dual Layout with FB
RN56
8P4R-15K
CN11
X_8P4C-47P
Micro Star Restricted Secret
Title
Front USB Port
Rev
20A
Document Number
MS-6712
MICRO-STAR INT'L
No. 69-1, De St, Jung-He City, Taipei Hsien, Taiwan
http://www.msi.com.tw
Last Revision Date:
Friday, November 08, 2002
Sheet
25
of
34

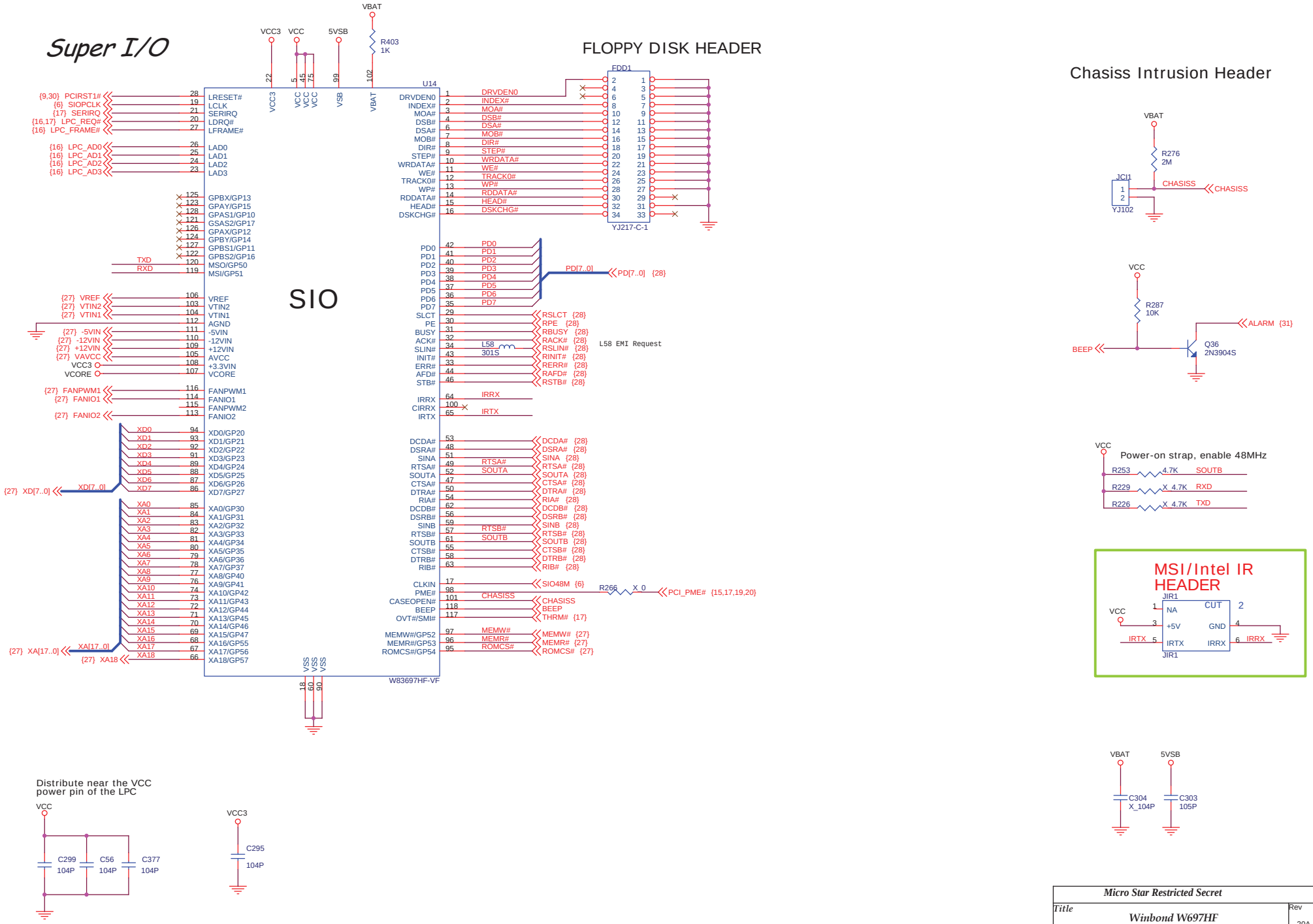

Micro Star Restricted Secret

Title	Winbond W697HF	Rev 20A
Document Number	MS-6712	
MICRO-STAR INT'L CO., LTD. No 69-1 De St, Jung-He City, Taipei Hsien, Taiwan http://www.msi.com.tw	Last Revision Date: Friday, November 08, 2002	Sheet 26 of 34

AMD CPU Thermal Protection Circuit

AMD Thermal protection

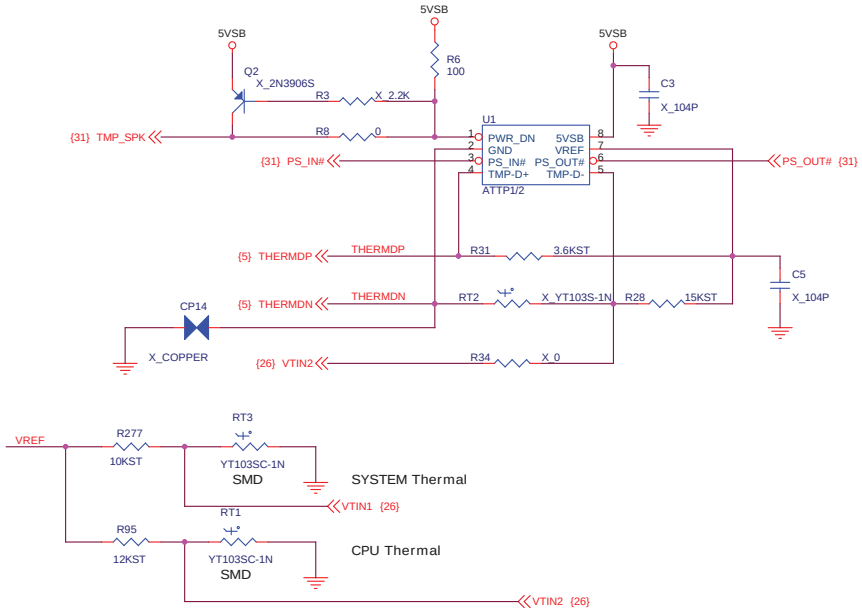

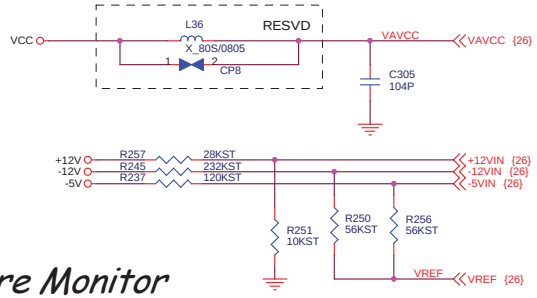

Hardware Monitor

Fan Speed Control

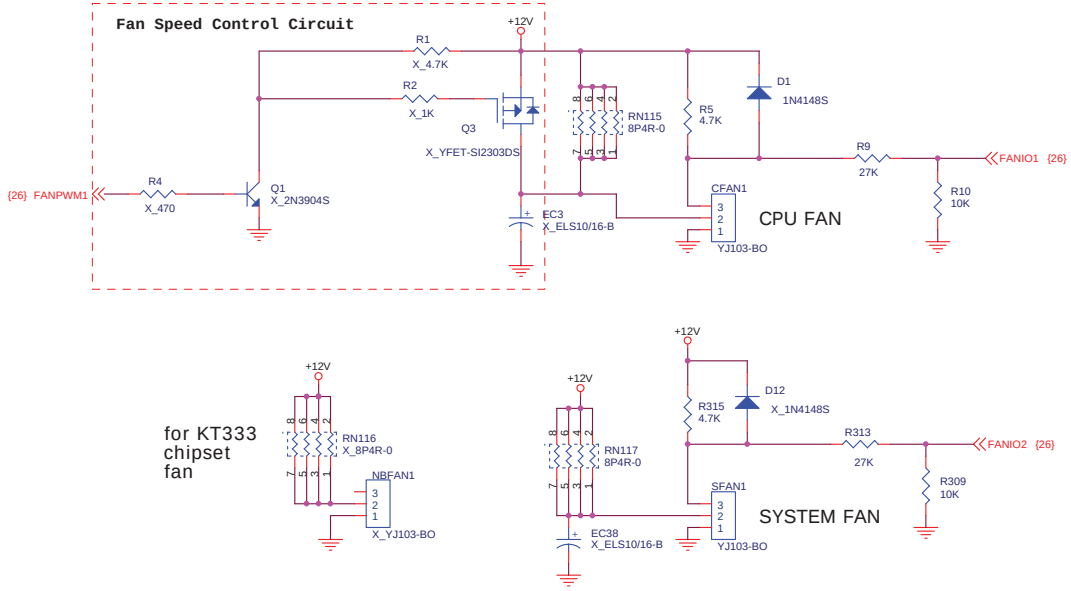

SYSTEM ROM

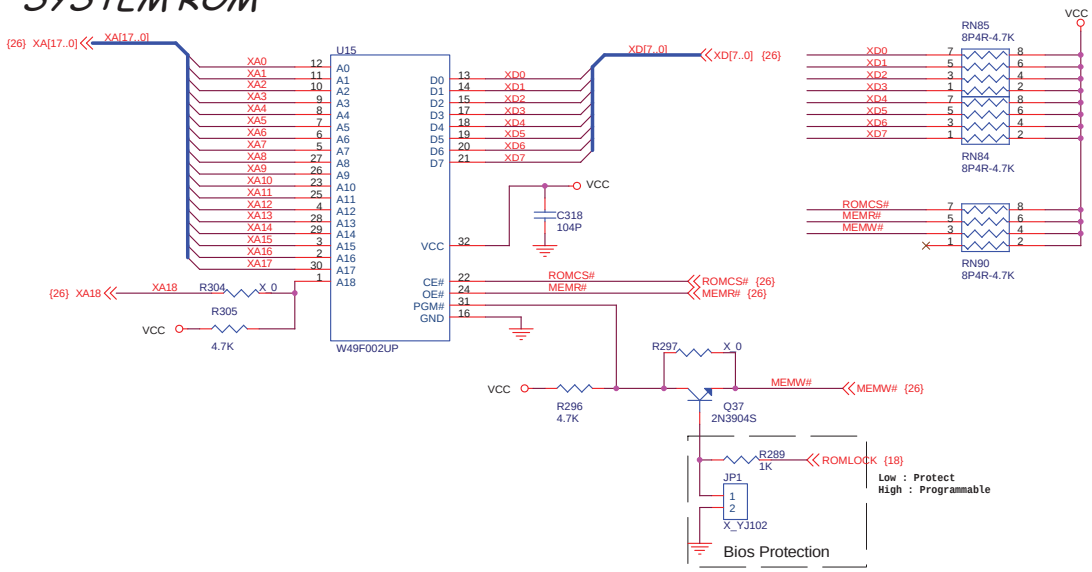

Micro Star Restricted Secret		
Title: Hardware Monitor		Rev 20A
Document Number: MS-6712		
MICRO-STAR INT'L CO.,LTD. No. 69-1 De St, Jung-He City, Taipei Hsien, Taiwan http://www.msi.com.tw	Last Revision Date: Friday, November 08, 2002	Sheet 27 of 34

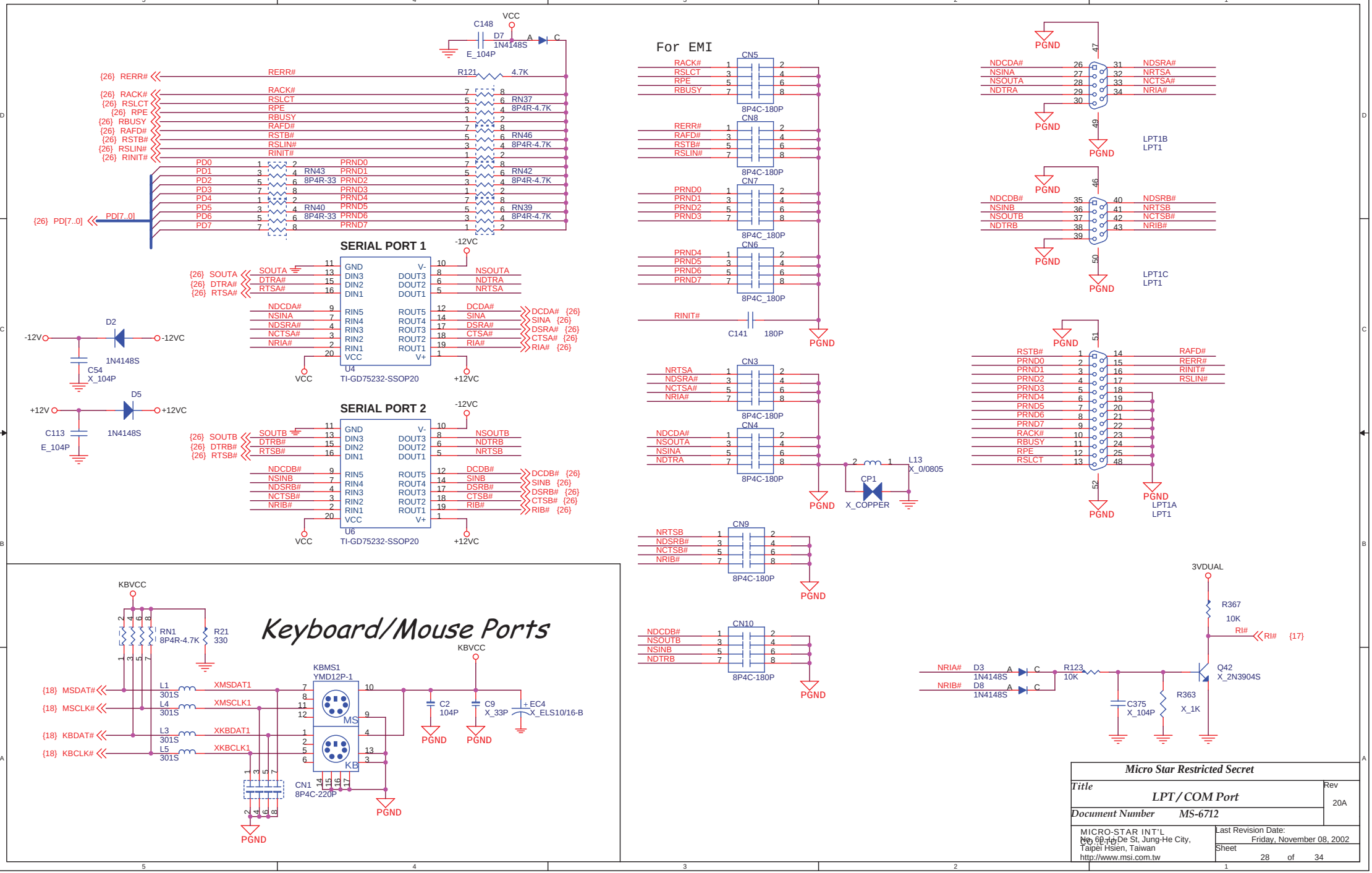

Micro Star Restricted Secret	
Title: LPT / COM Port	Rev: 20A
Document Number: MS-6712	
MICRO-STAR INT'L CO.,LTD. No.69-1,De St, Jung-He City, Taipei Hsien, Taiwan http://www.msi.com.tw	Last Revision Date: Friday, November 08, 2002
	Sheet 28 of 34

Voltage Regular Module

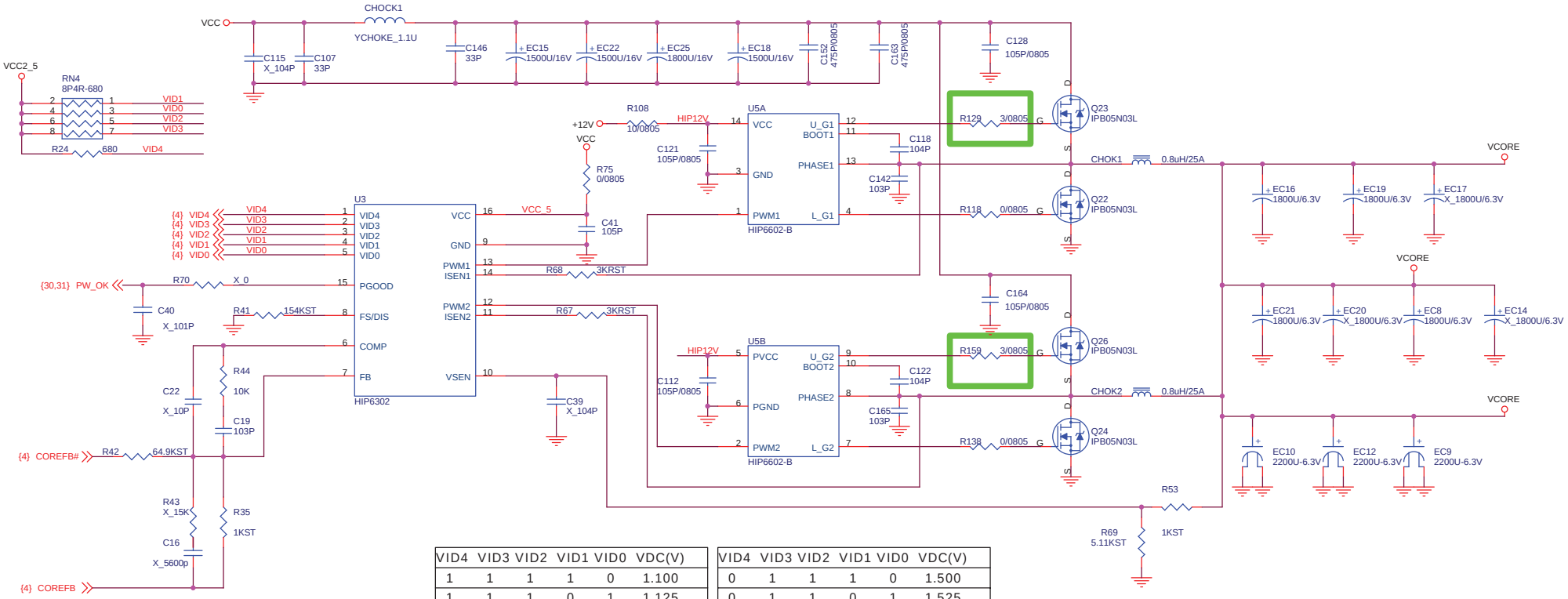

VID4	VID3	VID2	VID1	VID0	VDC(V)
1	1	1	1	0	1.100
1	1	1	0	1	1.125
1	1	1	0	0	1.150
1	1	0	1	1	1.175
1	1	0	1	0	1.200
1	1	0	0	1	1.225
1	1	0	0	0	1.250
1	0	1	1	1	1.275
1	0	1	1	0	1.300
1	0	1	0	1	1.325
1	0	1	0	0	1.350
1	0	0	1	1	1.375
1	0	0	1	0	1.400
1	0	0	0	1	1.425
1	0	0	0	0	1.450
0	1	1	1	1	1.475

VID4	VID3	VID2	VID1	VID0	VDC(V)
0	1	1	1	0	1.500
0	1	1	0	1	1.525
0	1	1	0	0	1.550
0	1	0	1	1	1.575
0	1	0	1	0	1.600
0	1	0	0	1	1.625
0	1	0	0	0	1.650
0	0	1	1	1	1.675
0	0	1	1	0	1.700
0	0	1	0	1	1.725
0	0	1	0	0	1.750
0	0	0	1	1	1.775
0	0	0	1	0	1.800
0	0	0	0	1	1.825
0	0	0	0	0	1.850
1	1	1	1	1	OFF

Micro Star Restricted Secret

Title *VRM 9.0 / HIP6302* Rev 20A

Document Number *MS-6712*

MICRO-STAR INT'L
No.69-1, De St, Jung-He City,
Taipei Hsien, Taiwan
http://www.msi.com.tw

Last Revision Date: Friday, November 08, 2002

Sheet 29 of 34

ACPI Controller

SEL0	5VUSB
H	2 MOSFET
L	1 MOSFET

**S50# pin function(Hi level = 5V)
same as 5VUSB(Hi level = 12V)

5VUSB USE 2 MOSFET

Low RDS ON MOSFET

CHARGE PUMP VOLTAGE OUTPUT

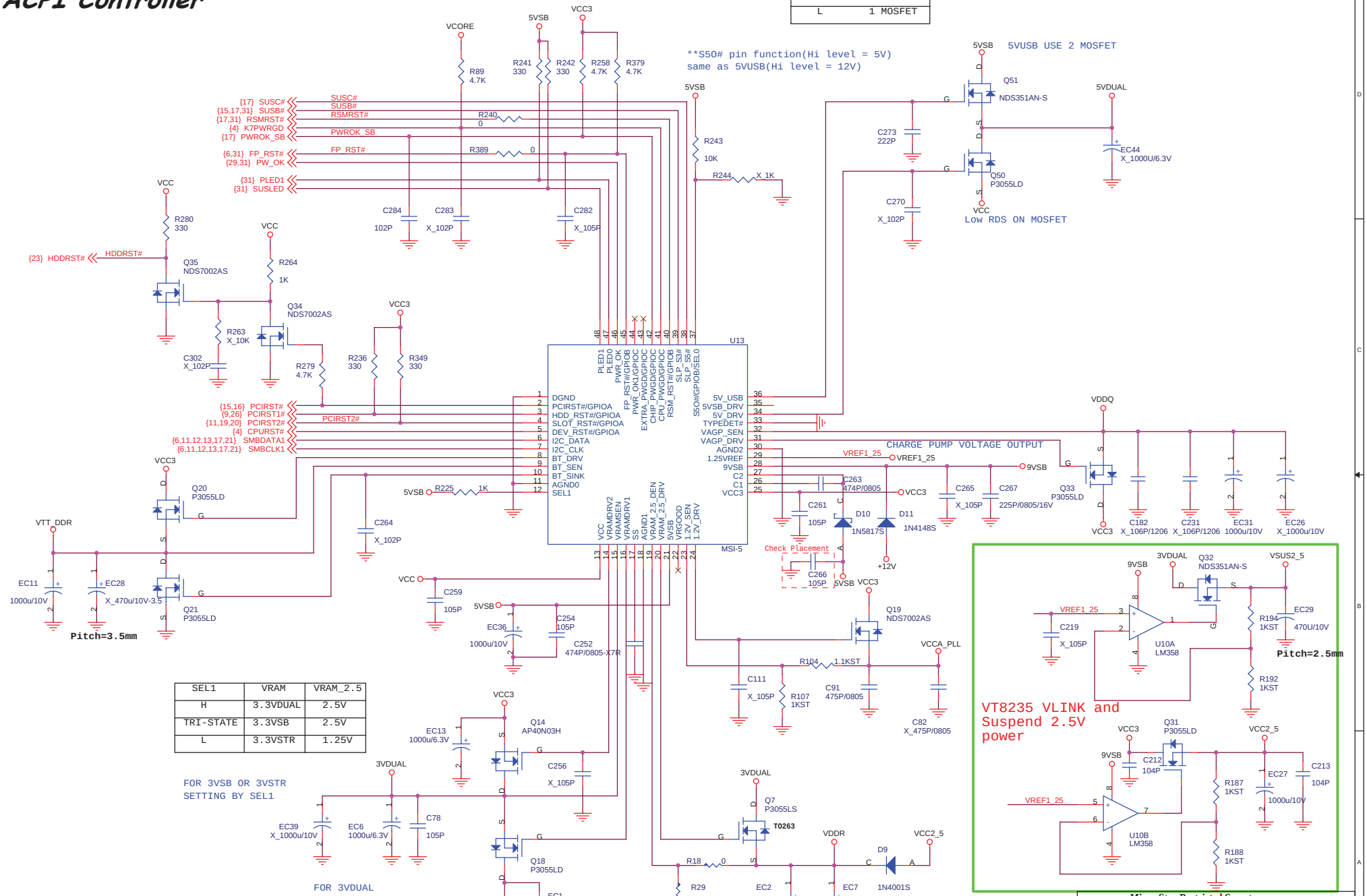

SEL1	VRAM	VRAM_2.5
H	3.3VDUAL	2.5V
TRI-STATE	3.3VSB	2.5V
L	3.3VSTR	1.25V

FOR 3VSB OR 3VSTR
SETTING BY SEL1

FOR 3VDUAL
SETTING BY
SEL1

** SETTING 3VSTR THEN VRAM_2.5
BECOME TO 1.25 VREF

Micro Star Restricted Secret

Title	ACPI Controller	Rev 20A
Document Number	MS-6712	
MICRO-STAR INT'L No. 69-1, Li-De St, Jung-He City, Taipei Hsien, Taiwan http://www.msi.com.tw	Last Revision Date: Friday, November 08, 2002	Sheet 30 of 34

POWER OK Circuits

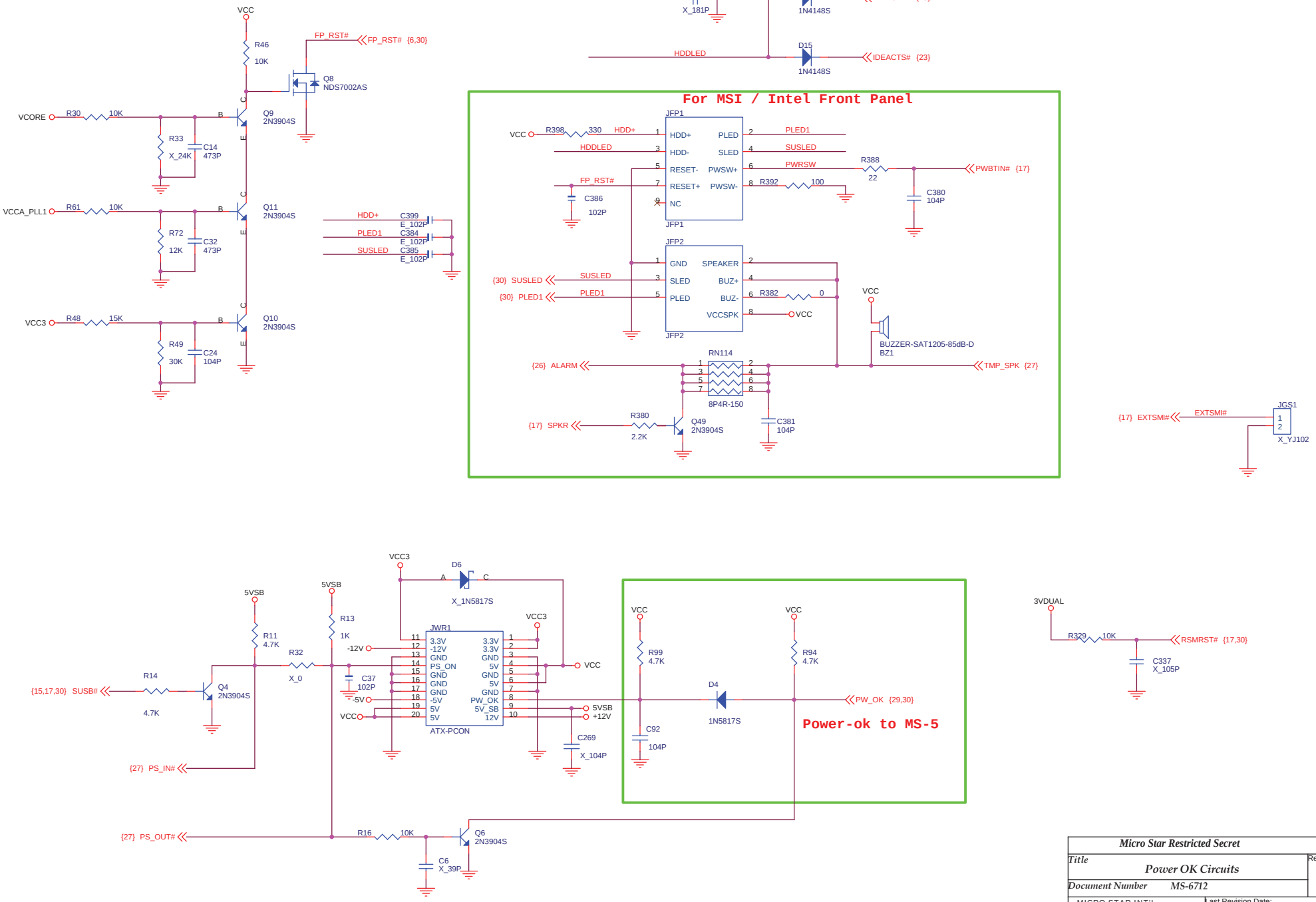

Micro Star Restricted Secret		
Title: Power OK Circuits		Rev: 20A
Document Number: MS-6712		
MICRO-STAR INT'L No 69-1 De St, Jung-He City, Taipei Hsien, Taiwan http://www.msi.com.tw	Last Revision Date: Friday, November 08, 2002 Sheet 31 of 34	

BULK / Decopuling

CPU

Place on SOCKET 462 Cavity

VCORE

C100 224P, C98 224P, C101 224P, C102 224P, C103 224P, C67 224P

C53 224P, C74 224P, C45 224P, C66 224P, C77 224P, C51 224P

C47 224P, C86 224P, C97 224P, C49 224P

C96 475P/0805, C93 X_475P/1206, C95 X_475P/1206, C94 475P/0805

C81 475P/0805, C70 104P, C61 X_475P/1206, C84 475P/0805

C73 X_475P/1206, C64 475P/0805, C52 475P/1206, C50 475P/0805

C48 475P/0805, C46 104P, C114 X_475P/1206

C58 104P, C106 104P, C104 104P

FM5, FM8, FM6, FM3, FM12, FM9, FM13, FM11, FM4, FM7, FM10 — FM

VT8377

Place on VT8366 Solder side

VCORE — C463 X_104P/B

0B C392,C393 REMEMBER CHANGE PACKAGE TO C0603MSB

VCORE — Place around VT8366

C466 X_104P/B, C137 X_104P, C62 X_104P

VDDR — Place on VT8366 — C167 X_104P

VCC2_5 — C281 X_104P

VDDQ — Place on VT8366

C204 104P, C171 104P, C168 104P, C170 105P

VCC3 — C312 X_104P, C217 X_104P, C317 X_103P, C370 X_104P

VCC — C314 E_102P, C334 X_104P, C369 E_104P, C249 E_104P, C289 X_104P

VCC3 — C251 X_104P, C354 X_104P — VCC

VCC3 — C308 104P, C123 X_104P, C351 104P, C279 E_104P — VCC — C368 X_104P

C250 X_104P, C324 104P, C327 X_104P

VCC3 — C278 X_104P — VCC2_5

VCORE — C424 X_104P/B, C419 X_104P/B — VDDR

VCC — C80 X_104P, C158 104P, C105 X_104P, C394 104P, C59 104P

C383 X_104P, C358 104P, C310 X_104P

VCC3 — C13 104P, C376 104P, C290 104P, C527 X_104P, C528 X_104P

VDDQ — C502 X_104P/B, C508 X_104P/B — VCC2_5

VCC2_5 — C205 X_104P

VDDQ — C177 X_104P, C482 X_104P/B, C225 X_104P — VCC3

VCC — C359 X_104P, C320 104P, C271 E_104P, C393 X_104P, C382 X_104P — VCC3

For EMI

DDR

VDDR — EC24 X_470u/10V, 5020 C504 X_104P, C155 104P, C184 X_104P

VDDR — 5020 C408 X_105PU/0805, 5020 C407 X_105PU/0805, 5020 C494 X_105PU/0805, 5020 C498 X_105PU/0805

VCORE — C416 X_104P/B, C404 X_104P/B, C406 X_104P/B, C478 X_104P/B — VCC3

5VSB — EC34 X_10U/16V/S, C398 X_104P, C108 E_104P

VCC3 — EC30 X_1000U/6.3V, C11 E_102P, C298 104P, C223 104P

3VDUAL — EC37 X_1000U/6.3V, C255 X_104P, C365 104P

+12V — C1 104P

-12V — C29 104P

-5V — C87 104P

VCC3 — C529 X_104P, C530 X_104P

for EMI, place these cap to PCI 3,4 / 91.9.26

VCORE — For EMI — Place on Socket 462 Solder side

C432 X_39P/B, C413 X_39P/B, C405 X_39P/B, C412 X_39P/B, C430 X_39P/B, C422 X_39P/B, C417 X_39P/B, C418 X_39P/B

C420 X_39P/B, C421 X_39P/B, C414 X_39P/B, C409 X_39P/B, C411 X_39P/B, C415 X_39P/B, C410 X_39P/B

FM14, FM16, FM17, FM19, FM18, FM2, FM1, FM15 — FM

VCC — Impedance Test — T1 X_YJ102, T2 X_YJ102

MH9, MH5, MH8, MH3, MH7, MH1, MH6, MH4, MH2 — 150 Drill / 300 Pad — AGND, KBGND

Micro Star Restricted Secret	
Title: BULK / Decopuling	Rev: 20A
Document Number: MS-6712	
MICRO-STAR INT'L, No 69-1 De St, Jung-He City, Taipei Hsien, Taiwan, http://www.msi.com.tw	Last Revision Date: Friday, November 08, 2002
	Sheet 32 of 34

1.0 Revision History (Changes from Rev 0A)

Sheet	Desciption
4	Add LCL Filter for -DICLKx Signals.
15	Change EC2,EC27 Package for 1000u/6.3V.
16	Change Fan Control Logic.
19	Add Input Capacitor EC36 for meet future SPEC.
	Implement PC2001 SPEC for Future.

2.0 Revision History (Changes from Rev 1.0)

Sheet	Desciption
23	Change IDE1 & IDE2 Location.
25	Add Front USB Connector Circuit to share with USB1.

2.0A Revision History (Changes from Rev 2.0)

Sheet	Desciption
5	Remove MS3 OverClock Circuit and use AMD Standard SPEC.
5	Implement AMD FSB 133/166 Auto Sense Function for Future.
22	Add Resistor for Front & Rear Line-Out connected.
	Remove Short line between Common Choke by EMI Request.

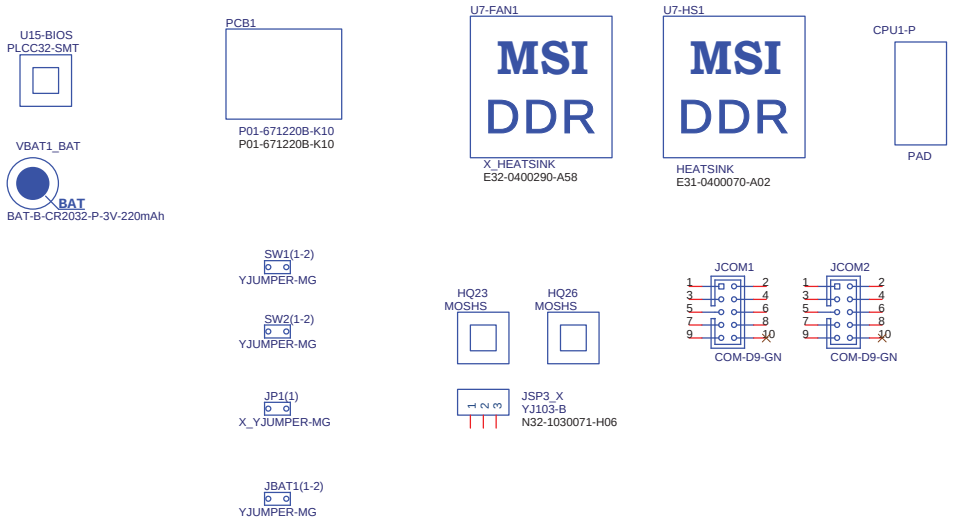

Micro Star Restricted Secret		
Title	*Packing Bom*	Rev 20A
Document Number	*MS-6712*	
MICRO-STAR INT'L No 69-1, De St, Jung-He City, Taipei Hsien, Taiwan http://www.msi.com.tw	Last Revision Date: Friday, November 08, 2002	
	Sheet 34 of 34	