MS-6701 Ver:20A

MEDION MD5005 Ver:1

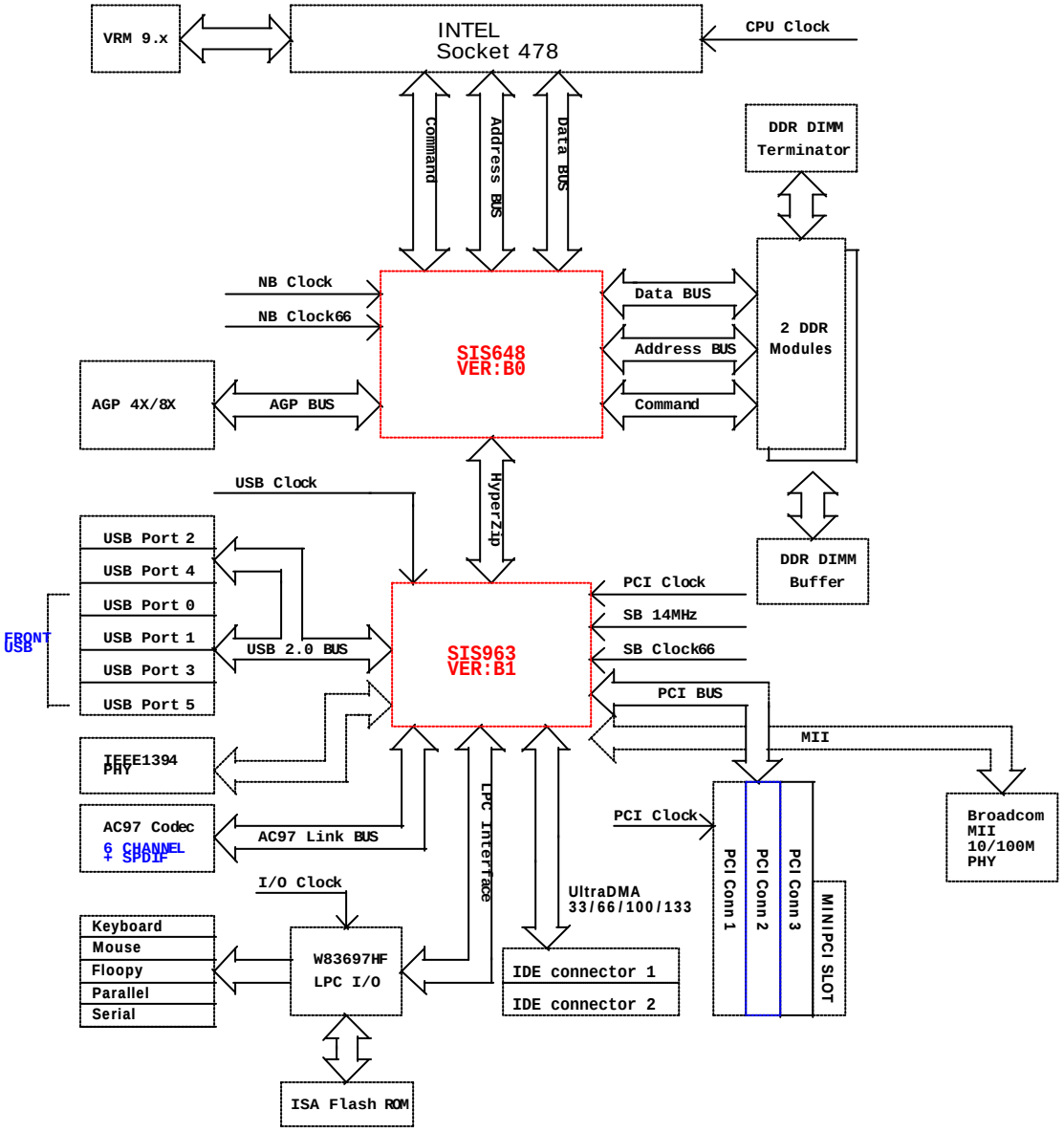

CPU:

Pentium4 socket-478 Processor

System Chipset:

SIS648(NB) + SIS963(SB)

On Board Function Chip:

LPC I/O-W83697HF
IEEE1394 AGERE-FW803
LAN-VIA VT6103
Audio Codec-CMEDIA 9739A

Expansion Slot:

AGP3.0 Slot*1
PCI2.2 Slot*3
MINIPCI Slot*1

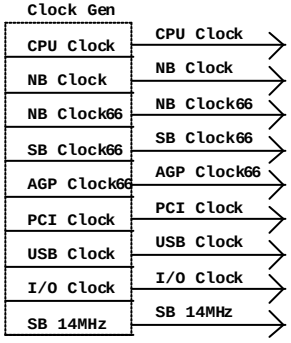

CONTENT

01-Block drigrame & Cover sheet
02-Power Div & Specification
03-Intel socket 478 CPU part 1
04-Intel socket 478 CPU part 2
05-Main Clock Gen & Clock buffer.
06-SIS648-1 Host & AGP
07-SIS648-2 Memory
08-SIS648-3/4 Power & HyperZip
09-SIS961-1 PCI & IDE & HyperZip
10-SIS963-2 MISC.
11-SIS963-3/4 USB & Power
12-AGP slot & Pull-UP/DN resistor
13-DIMM 1 & 2
14-DDR Terminator
15-PCI slot 1 & 2 & 3
15-MINI PCI slot
16-W83697HF I/O & BIOS
17-AC97 Codec
18-Audio connector
19-USB port & BIOS
20-IEEE1394/FW803
21-VIA VT6103(MII PHY)
22-MS5 ACPI Controller-CRB
23-VRM 9.0
24-ATX & F-Panel & Game port
25-IDE1/2 & PS2
26-Com/Parallel port

12-24-2002

MICRO-STAR INT'L CO.,LTD		
Title: Cover Sheet & Block Diagram		
Size: Custom	Document Number: MS-6701	Rev: 20a
Date: Tuesday, March 04, 2003	Sheet 1 of 28	

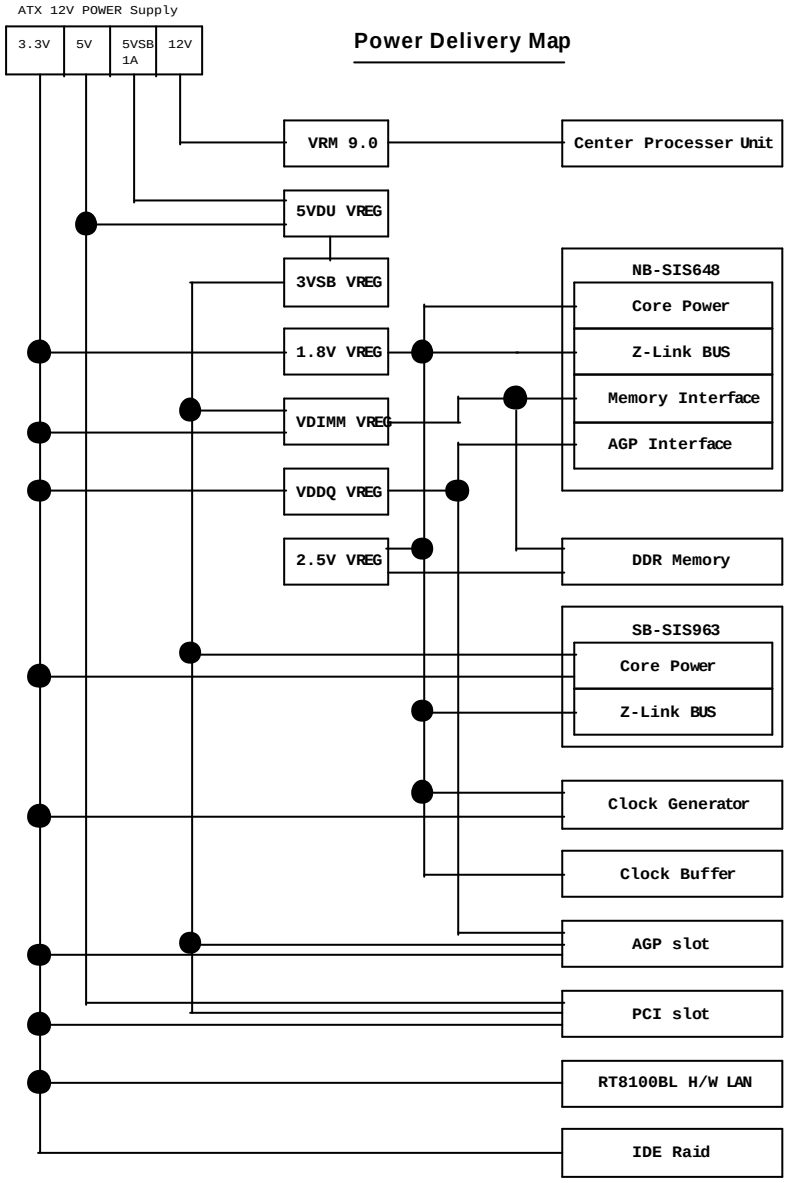

MICRO-STAR INT'L CO.,LTD

Title: Power Delivery

Size: Custom | Document Number: MS-6701 | Rev: 20a

Date: Tuesday, March 04, 2003 | Sheet 2 of 28

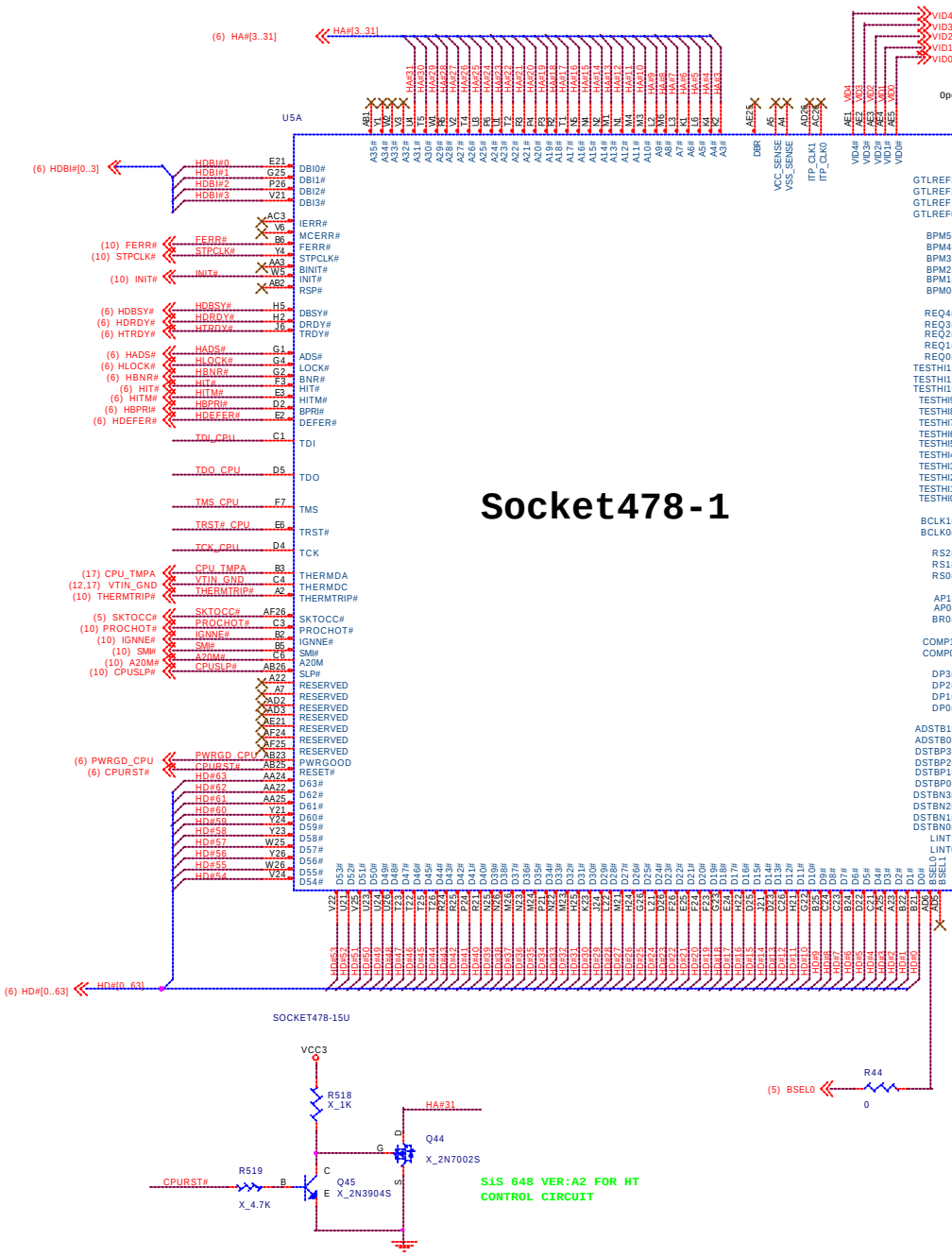

CPU GTL REFERNCE VOLTAGE BLOCK

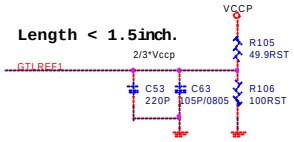

Every pin put one 220pF cap near it.
Trace Width 15mils, Space 15mils.
Keep the voltage dividers within 1.5 inches of the first GTLREF Pin

FERR#, STPCLK#, SMI#, CPUSLP#, A20M#, INTR, NMI, IGNNE#, INIT#
-----REGISTER CONTROLLER NEED SETTING

CPU STRAPPING RESISTORS

CLOSED TO SOCKET478

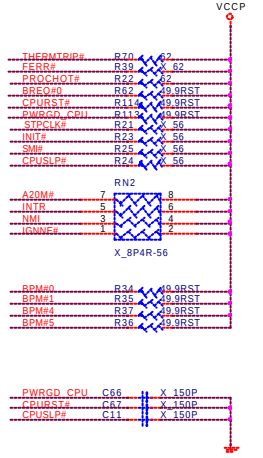

CPU ITP BLOCK

CLOSED TO SOCKET478

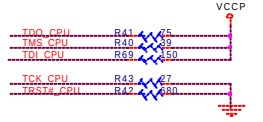

MICRO-STAR INT'L CO.,LTD

Title	FCPGA478-1	
Size / Custom	Document Number MS-6701	Rev 20A
Date: Tuesday, March 04, 2003	Sheet 3 of 28	

FOR NORTHWOOD
CPU ONLY

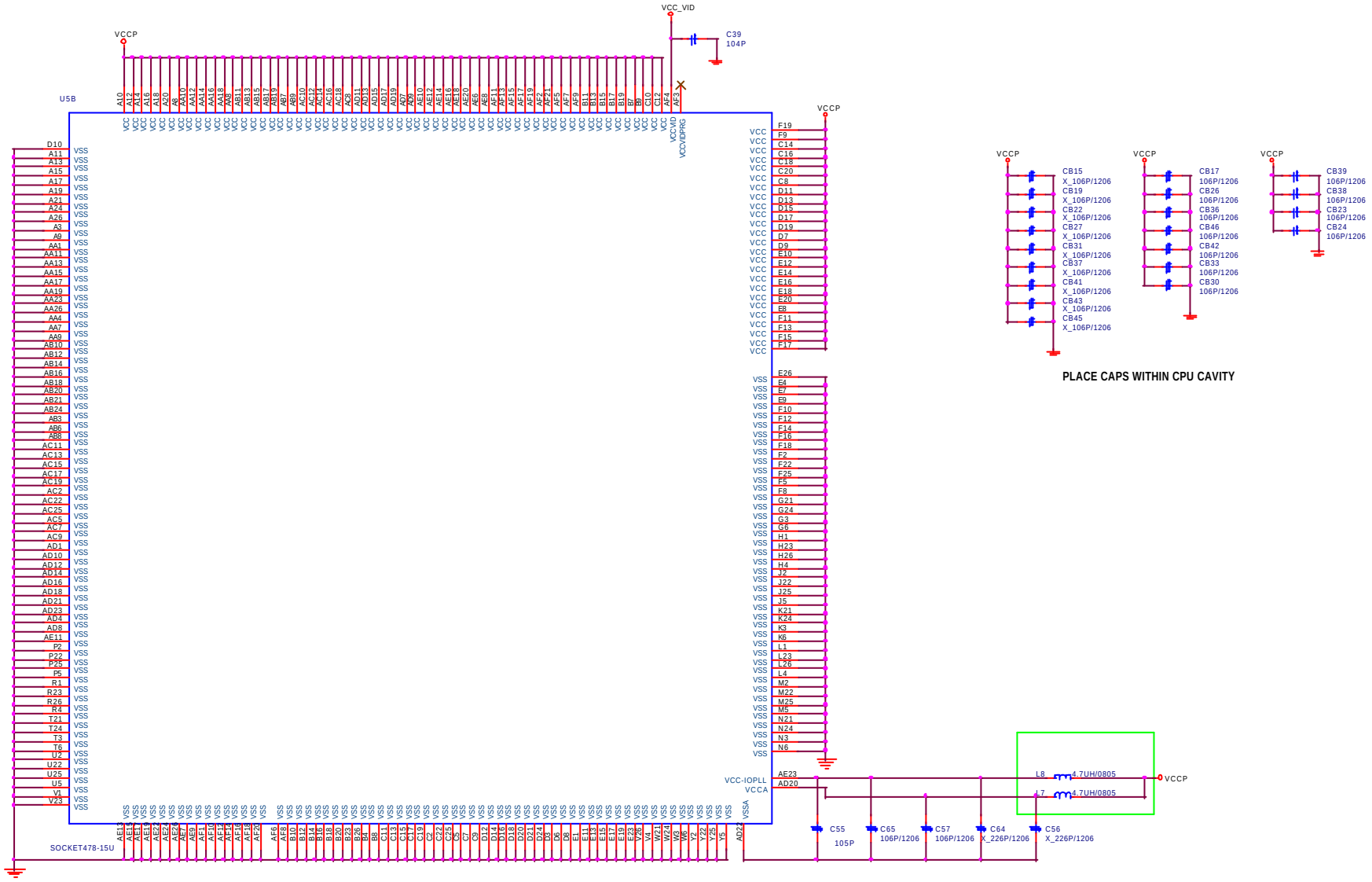

PLACE CAPS WITHIN CPU CAVITY

MICRO-STAR INT'L CO.,LTD	
Title	FCPGA478-2
Size / Custom	Document Number: MS-6701
Rev	20A
Date: Tuesday, March 04, 2003	Sheet 4 of 28

Main Clock Generator

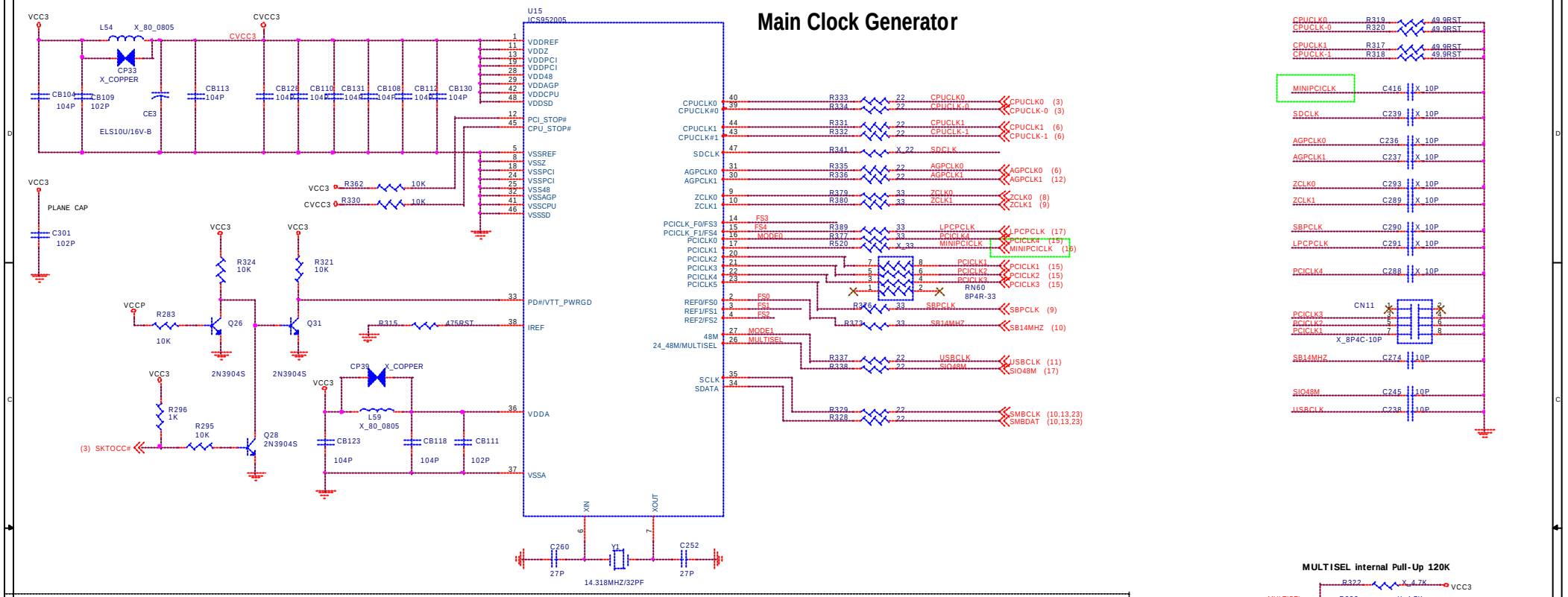

Clock Buffer (DDR)

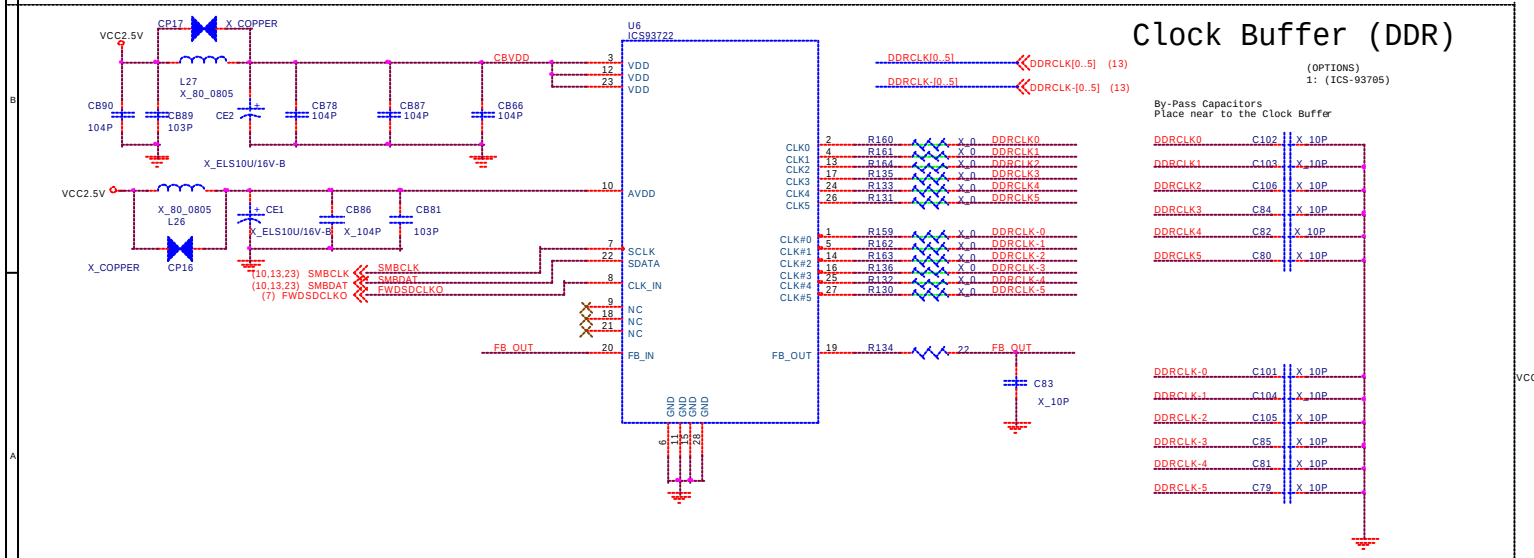

MULTISEL internal Pull-Up 120K

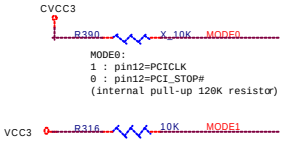

MODE0:
1 : pin12=PCICLK
0 : pin12=PCI_STOP#
(internal pull-up 120K resistor)

MODE1:
0 : Pin45=CPU_STOP# ,Pin33=PD#/VTT_PWRGD
1 : Pin33=CPU_STOP# ,Pin45=PD#/VTT_PWRGD
(internal pull-up 120K resistor)

F0~F4 internal Pull-Down 120K

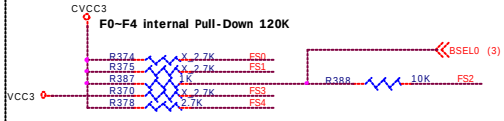

FS4	FS3	FS2	FS1	FS0	CPU	SDRAM	ZCLK	AGP	PCI
0	0	0	0	0	100	100	80	66	33
0	0	1	0	0	133	100	80	66	33

MICRO-STAR INT'L CO.,LTD

Title: Main Clock Gen.

Size: Custom | Document Number: MS-6701 | Rev: 20A

Date: Tuesday, March 04, 2003 | Sheet 5 of 28

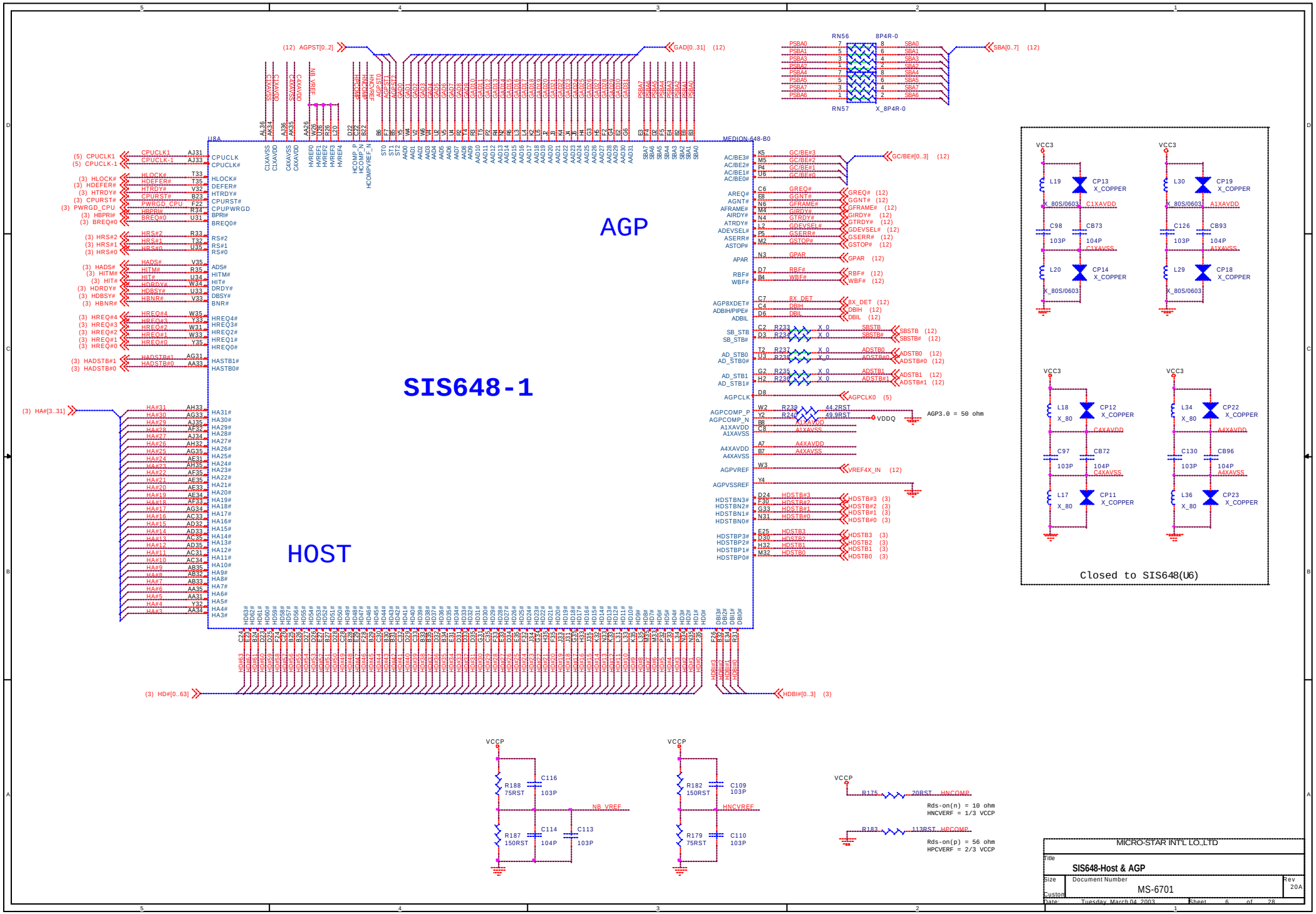
SIS648-1
AGP
HOST
U8A
MEDION-648-B0
RN56
8P4R-0
RN57
X_8P4R-0
(12) AGPST[0..2]
GAD[0..31] (12)
SBA[0..7] (12)
GC/BE#[0..3] (12)
(5) CPUCLK1
(5) CPUCLK-1
(3) HLOCK#
(3) HDEFER#
(3) HTRDY#
(3) CPURST#
(3) PWRGD_CPU
(3) HBPRI#
(3) BREQ#0
(3) HRS#2
(3) HRS#1
(3) HRS#0
(3) HADS#
(3) HITM#
(3) HIT#
(3) HDRDY#
(3) HDBSY#
(3) HBNR#
(3) HREQ#4
(3) HREQ#3
(3) HREQ#2
(3) HREQ#1
(3) HREQ#0
(3) HADSTB#1
(3) HADSTB#0
(3) HA#[3..31]
(3) HD#[0..63]
HDBI#[0..3] (3)
GREQ# (12)
GGNT# (12)
GFRAME# (12)
GIRDY# (12)
GTRDY# (12)
GDEVSEL# (12)
GSERR# (12)
GSTOP# (12)
GPAR (12)
RBF# (12)
WBF# (12)
8X_DET (12)
DBIH (12)
DBIL (12)
SBSTB (12)
SBSTB# (12)
ADSTB0 (12)
ADSTB#0 (12)
ADSTB1 (12)
ADSTB#1 (12)
AGPCLK0 (5)
AGP3.0 = 50 ohm
VDDQ
VREF4X_IN (12)
HDSTB#3 (3)
HDSTB#2 (3)
HDSTB#1 (3)
HDSTB#0 (3)
HDSTB3 (3)
HDSTB2 (3)
HDSTB1 (3)
HDSTB0 (3)
VCC3
L19
CP13
X_COPPER
X_80S/0603
C1XAVDD
C98
CB73
103P
104P
C1XAVSS
L20
CP14
L30
CP19
A1XAVDD
C126
CB93
A1XAVSS
L29
CP18
L18
CP12
X_80
C4XAVDD
C97
CB72
C4XAVSS
L17
CP11
L34
CP22
A4XAVDD
C130
CB96
A4XAVSS
L36
CP23
Closed to SIS648(U6)
VCCP
R188
75RST
C116
103P
NB_VREF
R187
150RST
C114
104P
C113
103P
R182
150RST
C109
103P
HNCVREF
R179
75RST
C110
103P
R175
20RST
HNCOMP
Rds-on(n) = 10 ohm
HNCVERF = 1/3 VCCP
R183
113RST
HPCOMP
Rds-on(p) = 56 ohm
HPCVERF = 2/3 VCCP
MICRO-STAR INT'L CO.,LTD
Title
SIS648-Host & AGP
Size
Document Number
MS-6701
Rev
20A
Custom
Date: Tuesday, March 04, 2003
Sheet 6 of 28

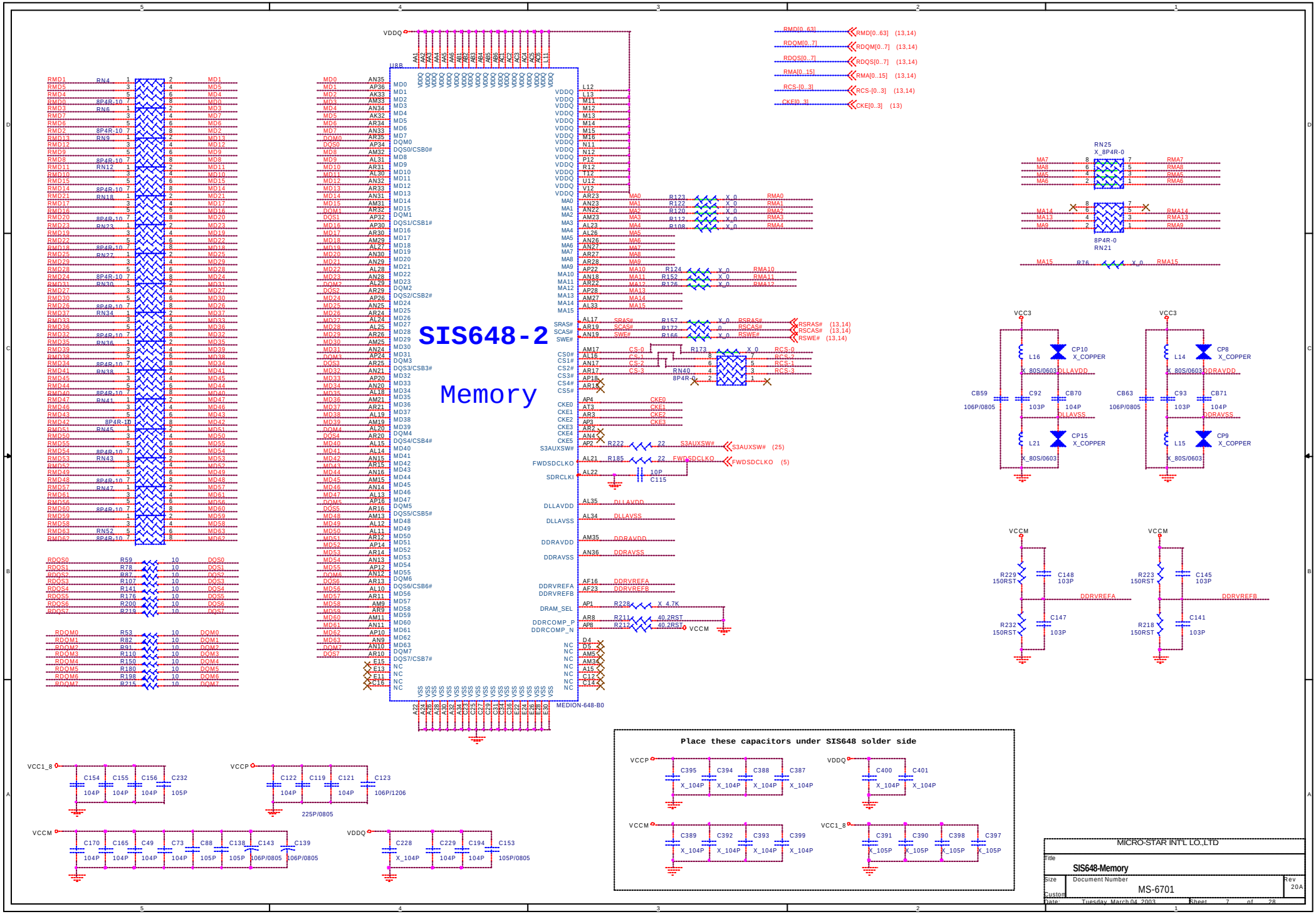
SIS648-2
Memory
U18
MEDION-648-B0
VDDQ
RMD[0..63] (13,14)
RDQM[0..7] (13,14)
RDQS[0..7] (13,14)
RMA[0..15] (13,14)
RCS-[0..3] (13,14)
CKE[0..3] (13)
RSRAS# (13,14)
RSCAS# (13,14)
RSWE# (13,14)
S3AUXSW# (25)
FWDSDCLKO (5)
VCC3
VCCM
VCC1_8
VCCP
Place these capacitors under SIS648 solder side
MICRO-STAR INT'L CO.,LTD
Title
SIS648-Memory
Size
Document Number
MS-6701
Rev
20A
Custom
Date: Tuesday, March 04, 2003
Sheet 7 of 28

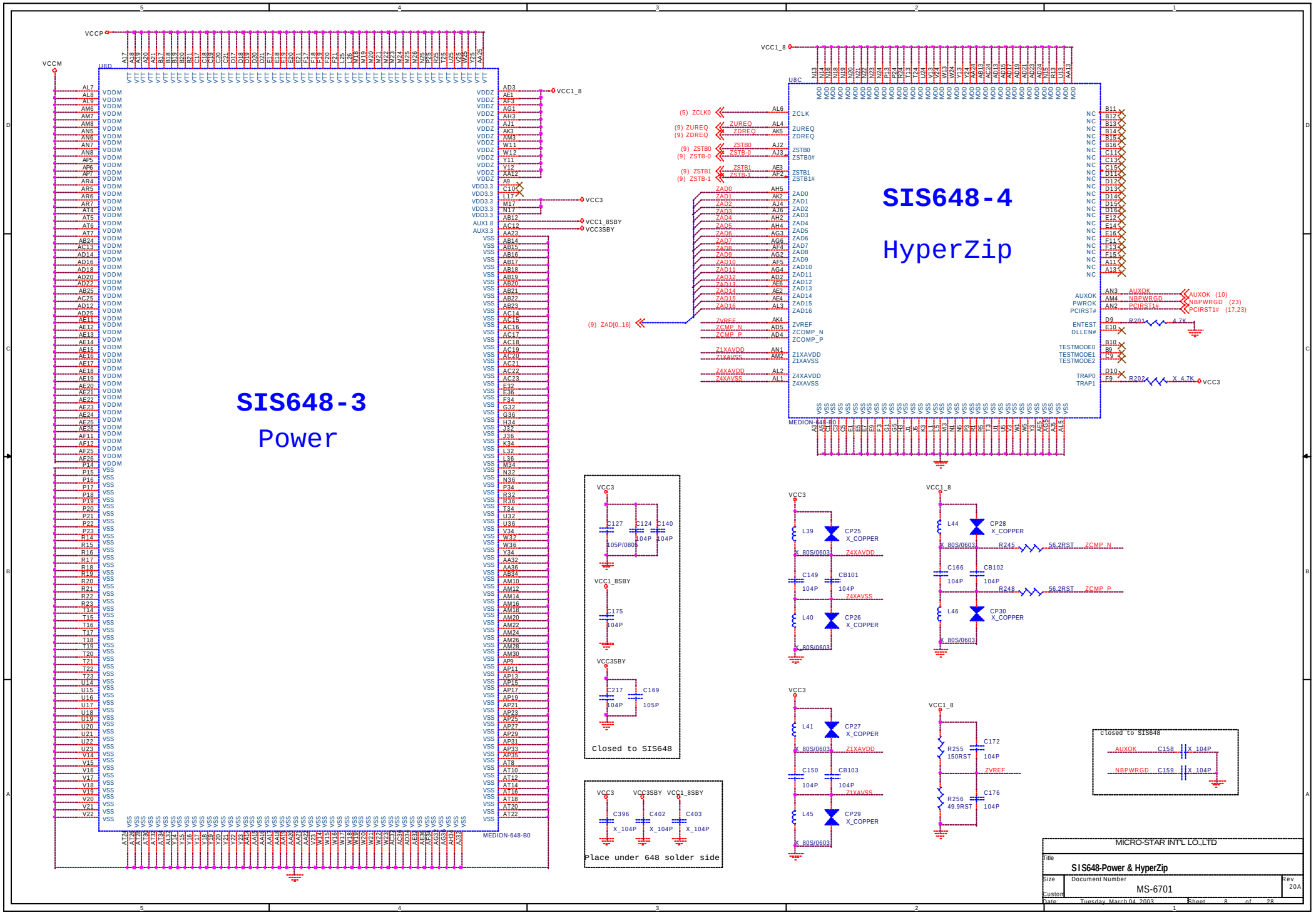
SIS648-3
Power
SIS648-4
HyperZip
U8D
U8C
MEDION-648-B0
VCCP
VCCM
VCC1_8
VCC3
VCC1_8SBY
VCC3SBY
(5) ZCLK0
(9) ZUREQ
(9) ZDREQ
(9) ZSTB0
(9) ZSTB-0
(9) ZSTB1
(9) ZSTB-1
(9) ZAD[0..16]
AUXOK (10)
NBPWRGD (23)
PCIRST1# (17,23)
R201 4.7K
R202 X_4.7K
Closed to SIS648
Place under 648 solder side
MICRO-STAR INT'L CO.,LTD
Title
SIS648-Power & HyperZip
Size
Document Number
MS-6701
Rev
20A
Custom
Date: Tuesday, March 04, 2003
Sheet 8 of 28

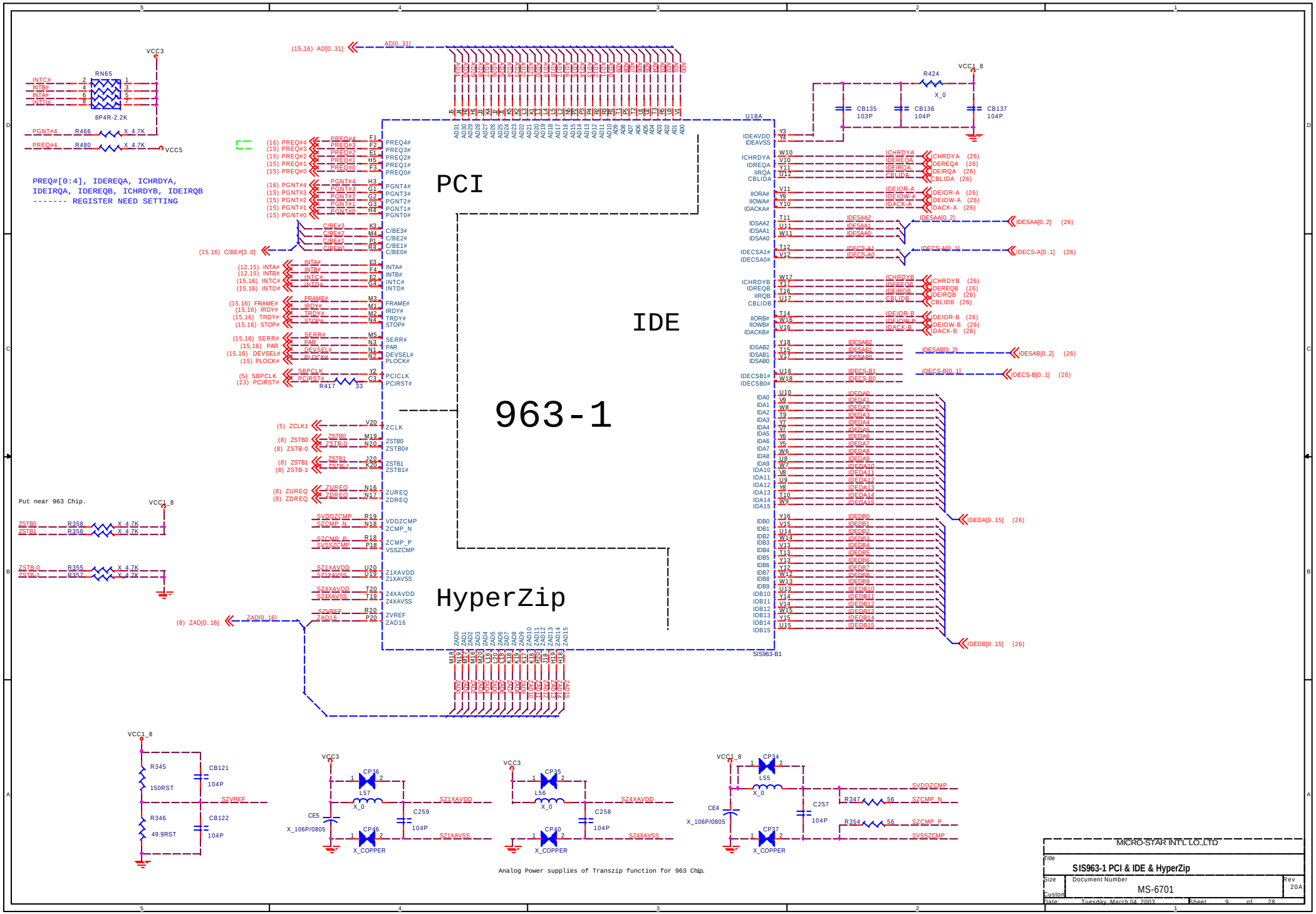
PCI
IDE
963-1
HyperZip
SIS963-B1
U18A
PREQ#[0:4], IDEREQA, ICHRDYA, IDEIRQA, IDEREQB, ICHRDYB, IDEIRQB
------- REGISTER NEED SETTING
Put near 963 Chip.
Analog Power supplies of Transzip function for 963 Chip.
MICRO-STAR INT'L CO.,LTD
SIS963-1 PCI & IDE & HyperZip
MS-6701
Tuesday, March 04, 2003

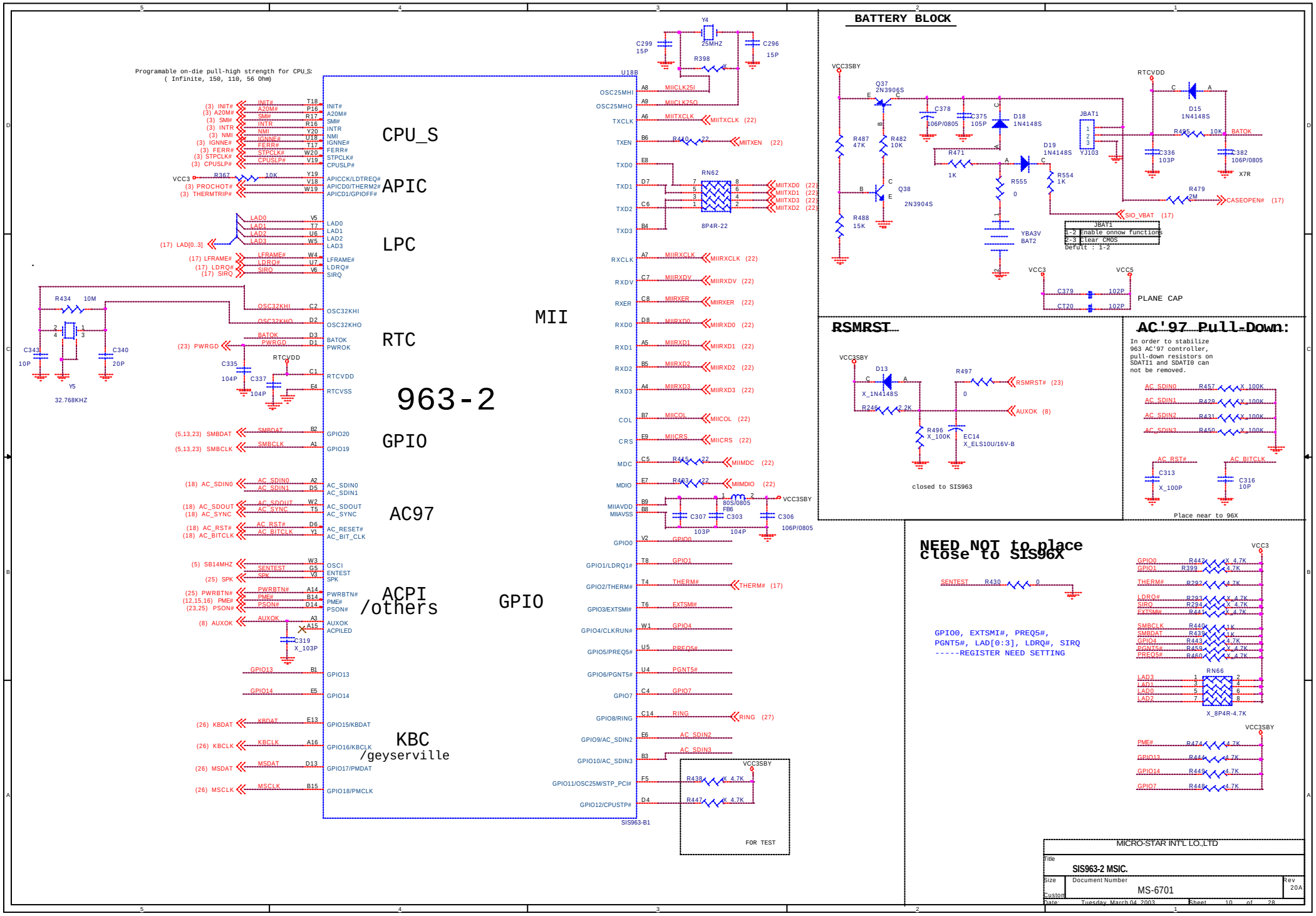
Programable on-die pull-high strength for CPU_S:
(Infinite, 150, 110, 56 Ohm)
CPU_S
APIC
LPC
RTC
MII
963-2
GPIO
AC97
ACPI
/others
GPIO
KBC
/geyserville
U18B
SIS963-B1
BATTERY BLOCK
PLANE CAP
RSMRST
closed to SIS963
AC'97 Pull-Down:
In order to stabilize
963 AC'97 controller,
pull-down resistors on
SDATI1 and SDATI0 can
not be removed.
Place near to 96X
NEED NOT to place
close to SIS96X
GPIO0, EXTSMI#, PREQ5#,
PGNT5#, LAD[0:3], LDRQ#, SIRQ
-----REGISTER NEED SETTING
FOR TEST
MICRO-STAR INT'L CO.,LTD
SIS963-2 MSIC.
MS-6701
Tuesday, March 04, 2003

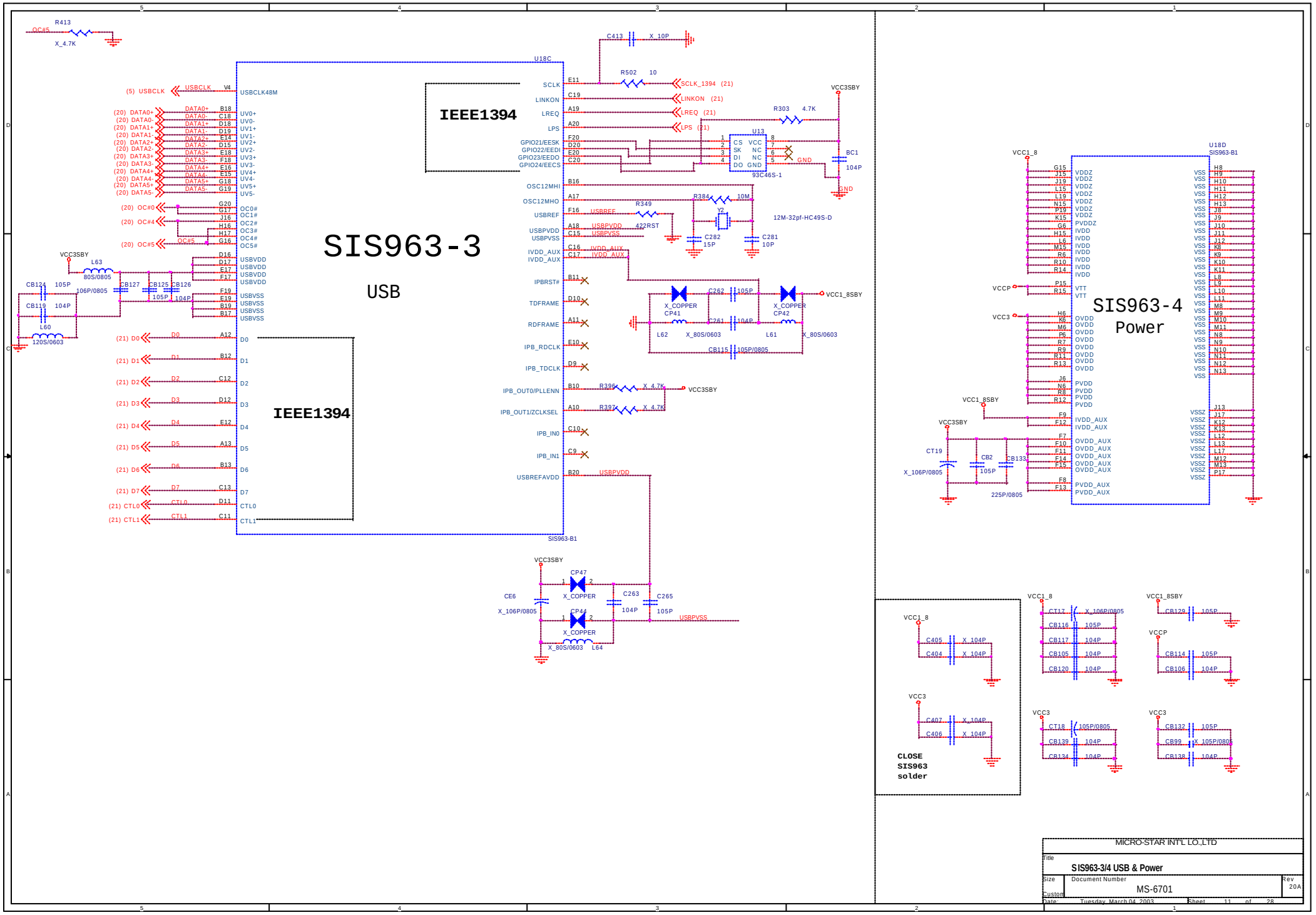
SIS963-3
USB
IEEE1394
IEEE1394
U18C
SIS963-B1
SIS963-4
Power
U18D
SIS963-B1
U13
93C46S-1
12M-32pf-HC49S-D
CLOSE
SIS963
solder
MICRO-STAR INT'L CO.,LTD
SIS963-3/4 USB & Power
MS-6701
Tuesday, March 04, 2003

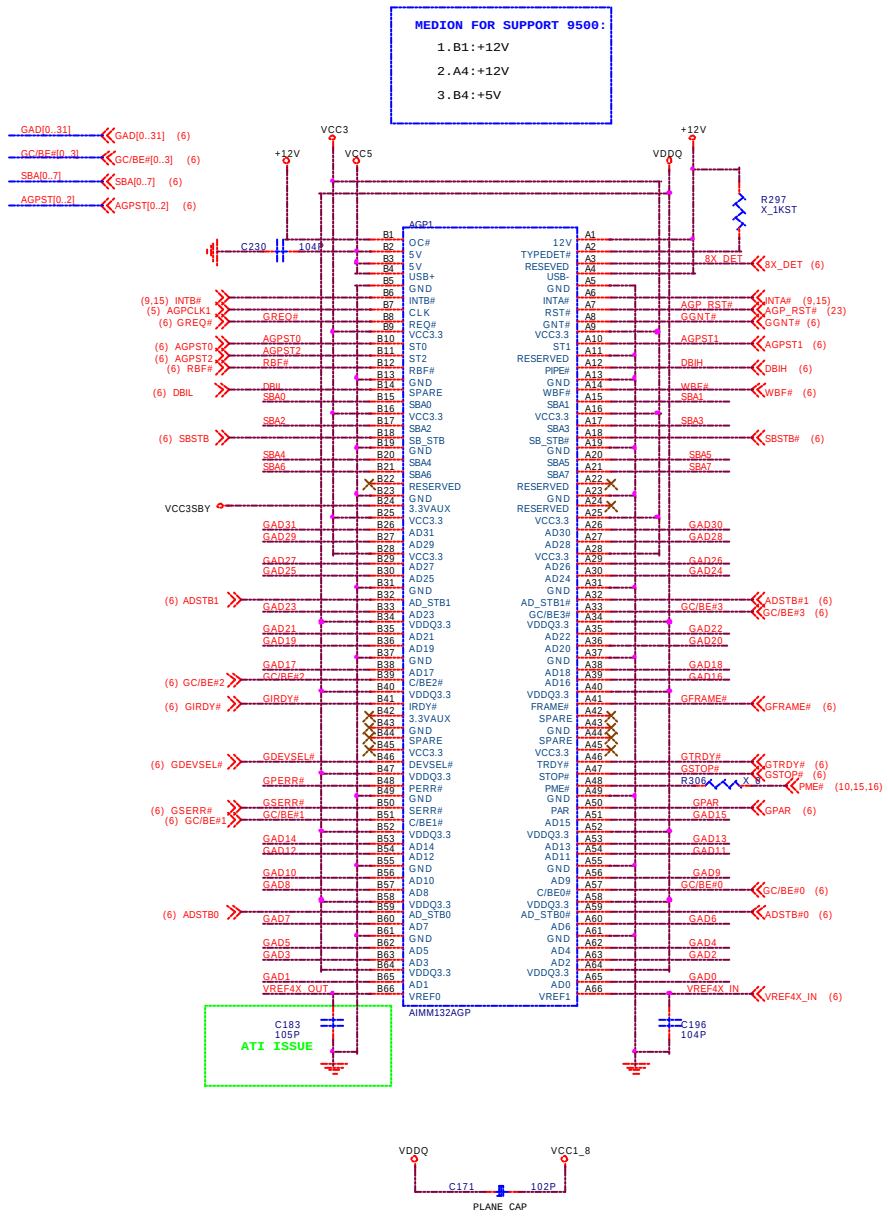

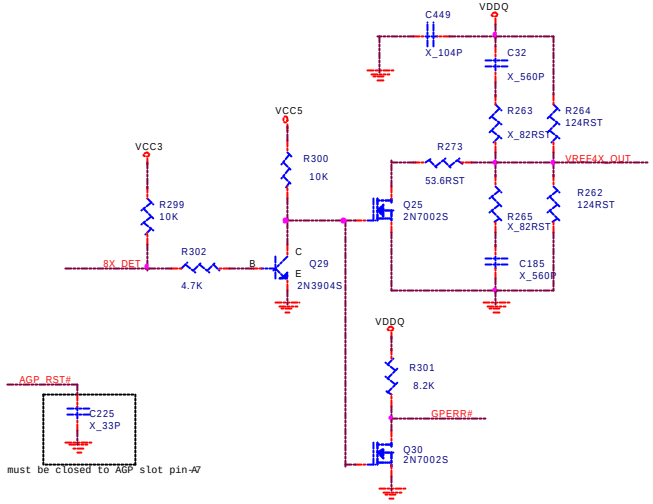

CLOSED TO AGP SLOT

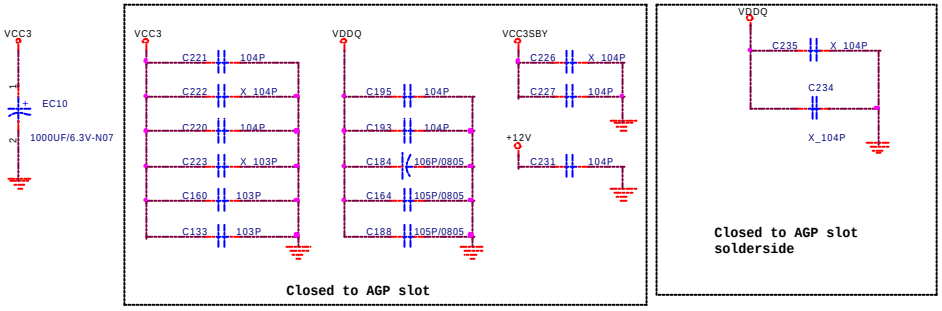

MICRO-STAR INT'L CO.,LTD	
Title: A GP Slot & Pull up/dn resistor	
Size: Custom	Document Number: MS-6701
Rev: 20A	
Date: Tuesday, March 04, 2003	Sheet 12 of 28

DDR DIMM1 & DIMM2

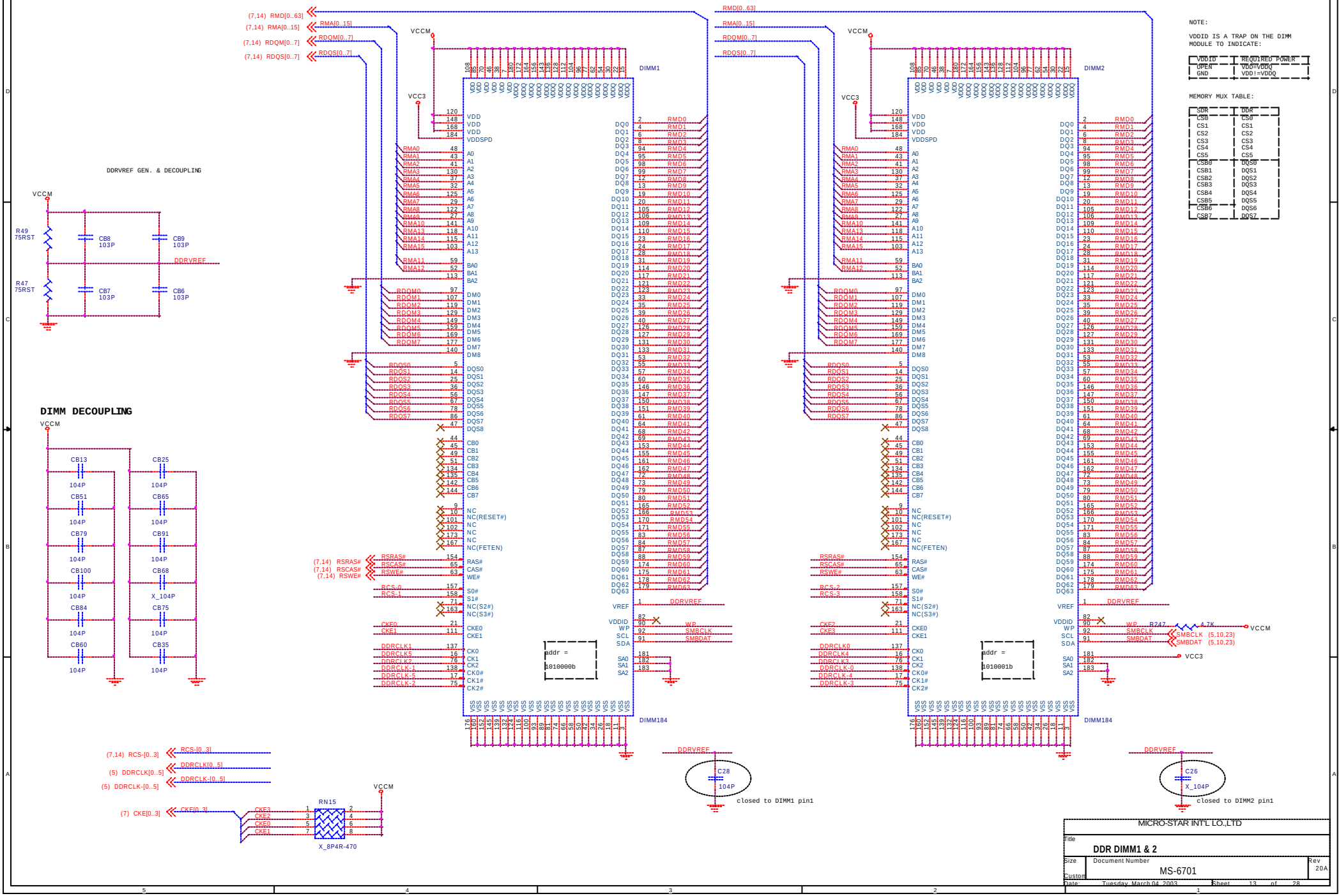

NOTE:

VDDID IS A TRAP ON THE DIMM MODULE TO INDICATE:

VDDID	REQUIRED POWER
OPEN	VDD=VDDQ
GND	VDD!=VDDQ

MEMORY MUX TABLE:

SDR	DDR
CS0	CS0
CS1	CS1
CS2	CS2
CS3	CS3
CS4	CS4
CS5	CS5
CSB0	DQS0
CSB1	DQS1
CSB2	DQS2
CSB3	DQS3
CSB4	DQS4
CSB5	DQS5
CSB6	DQS6
CSB7	DQS7

MICRO-STAR INT'L CO.,LTD

Title: DDR DIMM1 & 2

Size: Custom | Document Number: MS-6701 | Rev: 20A

Date: Tuesday, March 04, 2003 | Sheet 13 of 28

DDR TERMINATOR

SSTL-2 Termination Resistors

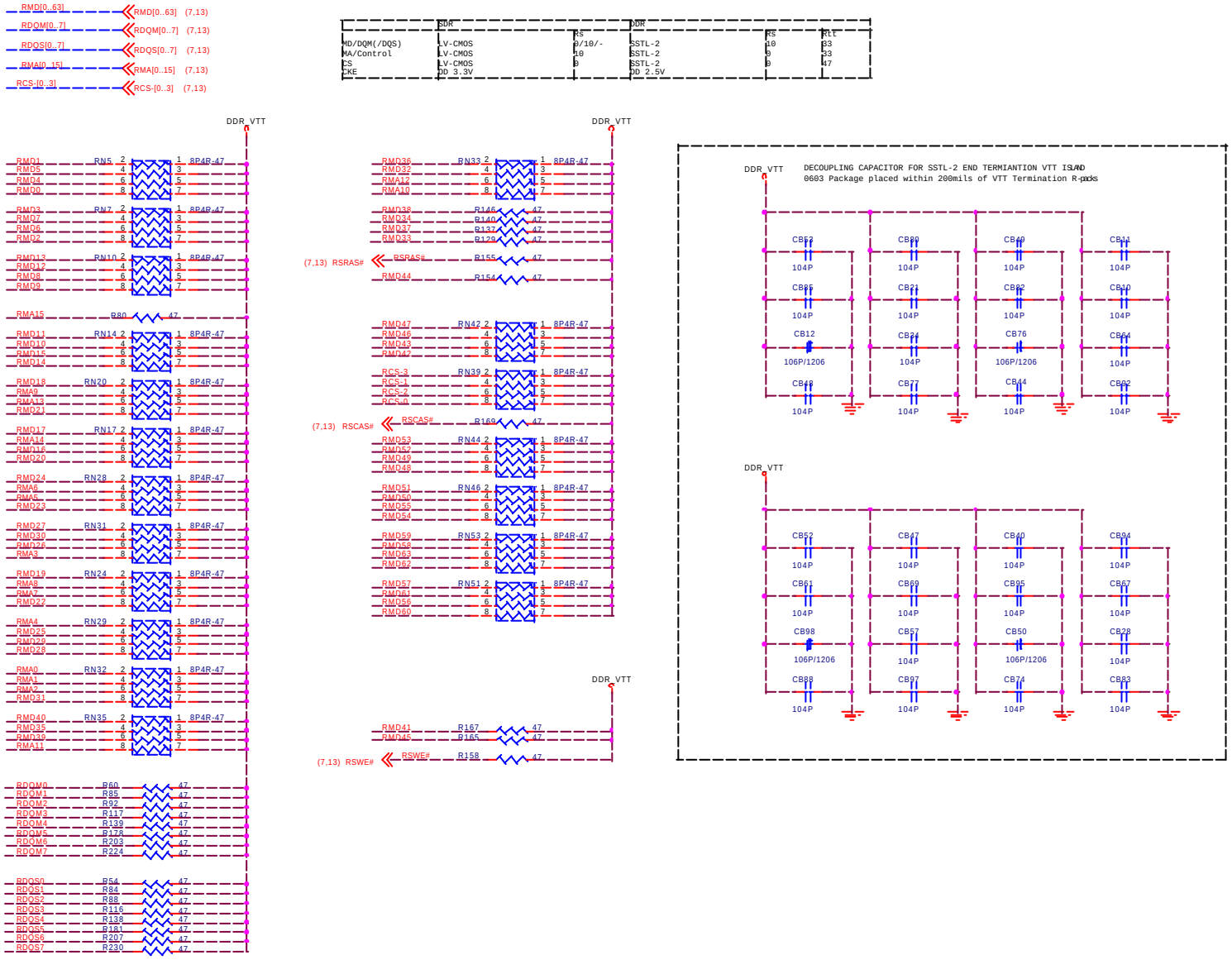

	SDR		DDR		
MD/DQM(/DQS)	LV-CMOS	9/10/-	SSTL-2	10	33
MA/Control	LV-CMOS	10	SSTL-2	9	33
CS	LV-CMOS	9	SSTL-2	9	47
CKE	3.3V		2.5V		

MICRO-STAR INT'L CO.,LTD

Title: DDR Terminator

Size: Custom | Document Number: MS-6701 | Rev: 20A

Date: Tuesday, March 04, 2003 | Sheet 14 of 28

PCI SLOT 1,2,3(PCI VER:2.2 COMPLY)

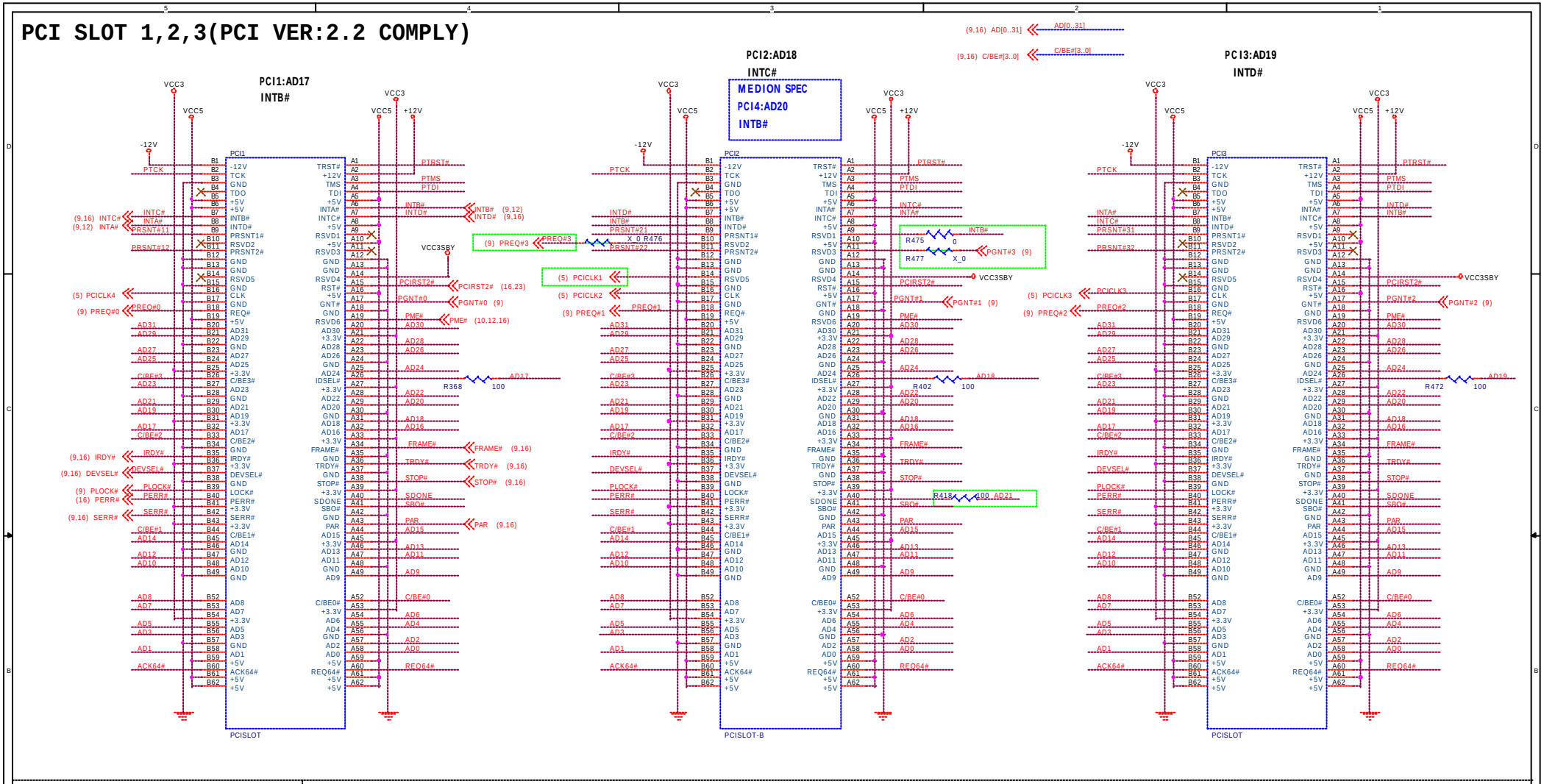

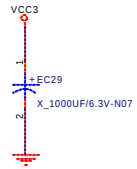

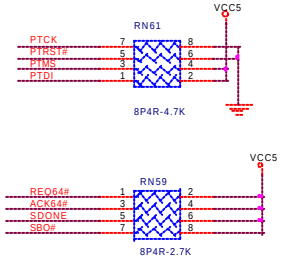

MICRO-STAR INT'L CO.,LTD

Title: PCI slot 1& 2

Size: Custom | Document Number: MS-6701 | Rev: 20A

Date: Tuesday, March 04, 2003 | Sheet 15 of 28

Mini PCI

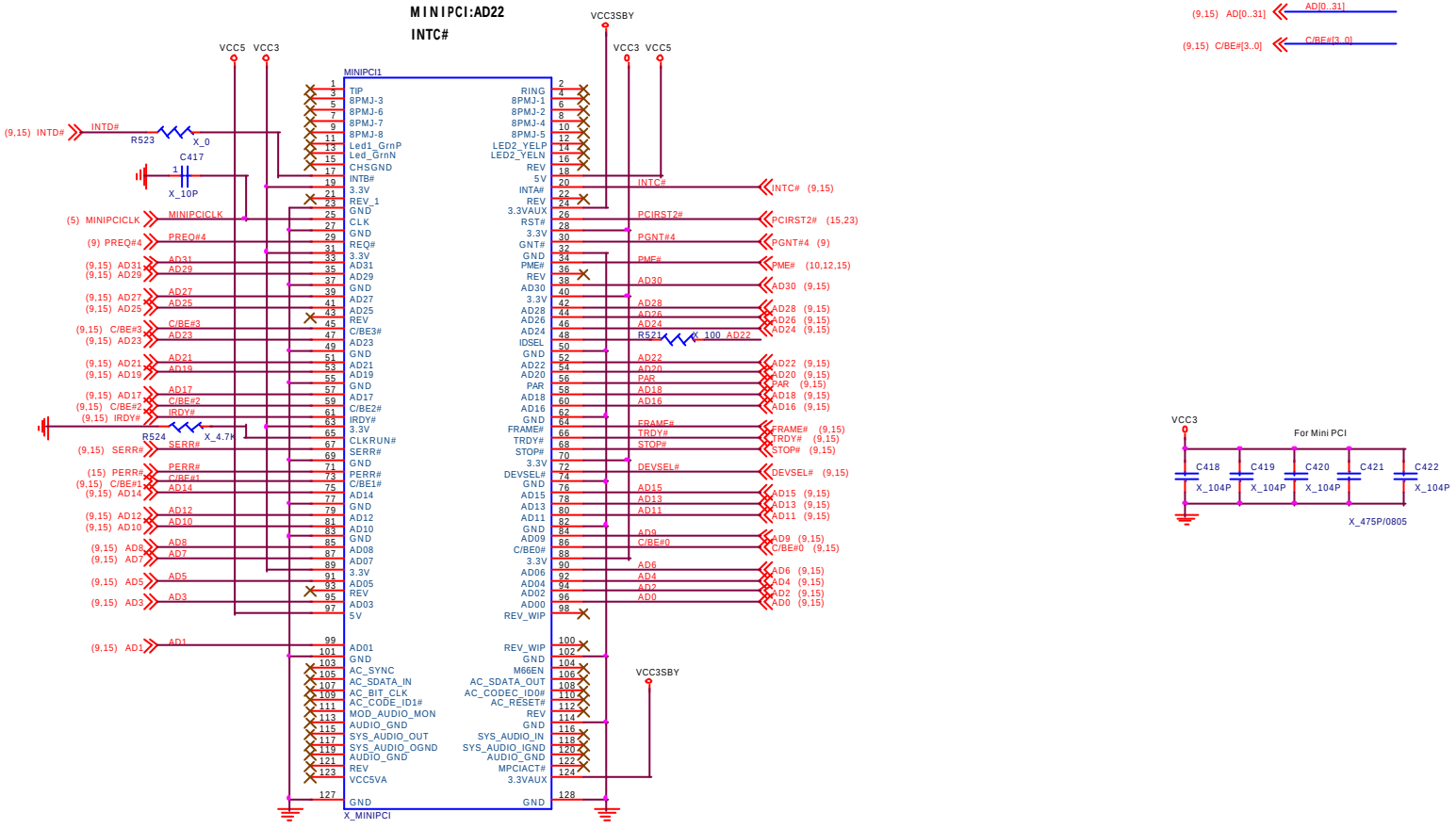

MICRO-STAR INT'L CO.,LTD	
Title: Mini PCI	
Size: Custom	Document Number: MS-6701
Rev: 20A	
Date: Tuesday, March 04, 2003	Sheet 16 of 28

SUPER I/O

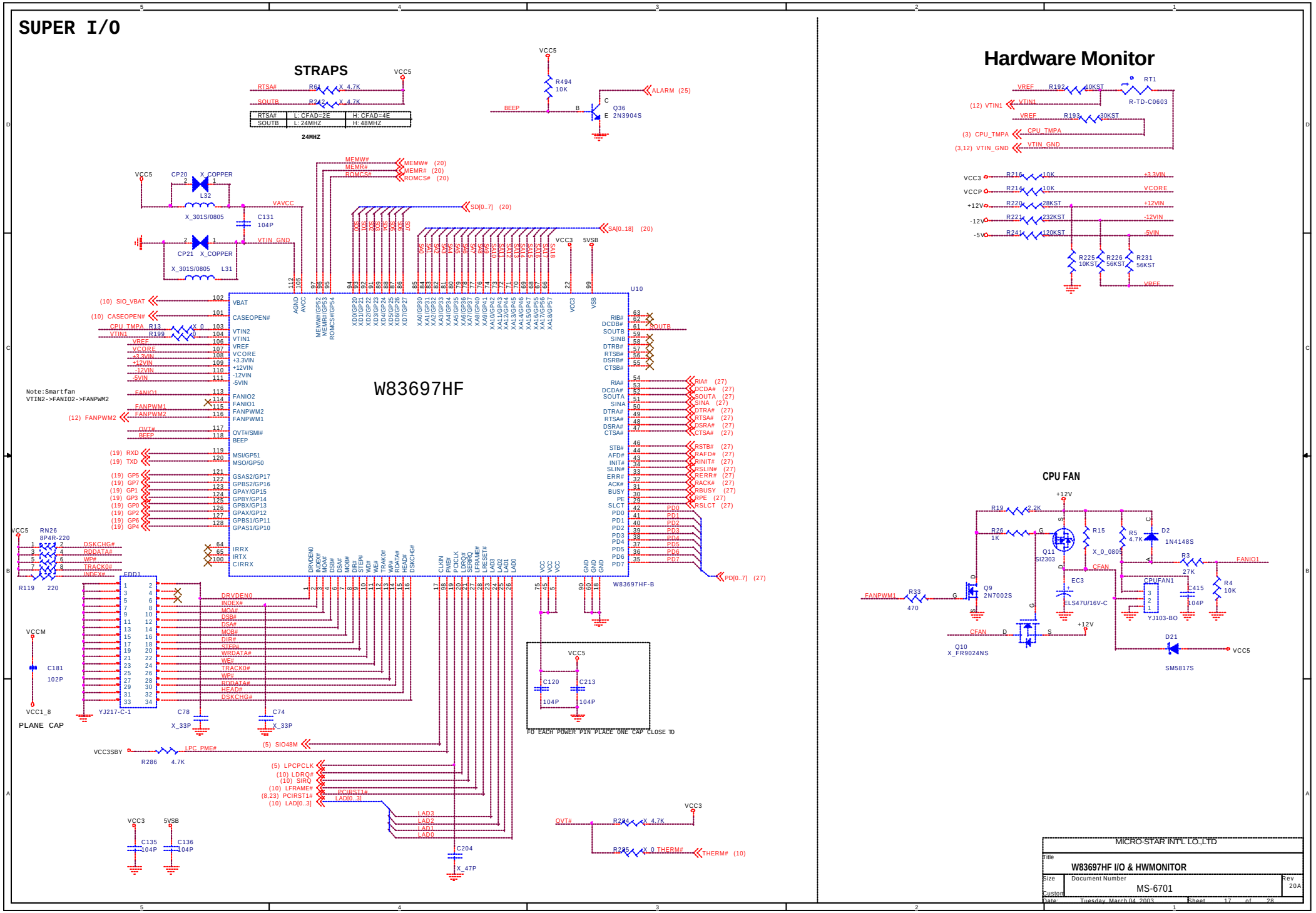
STRAPS
RTSA# R64 X_4.7K
SOUTB R242 X_4.7K
RTSA# L: CFAD=2E H: CFAD=4E
SOUTB L: 24MHZ H: 48MHZ
24MHZ
VCC5
R494 10K
BEEP
Q36 2N3904S
ALARM (25)
W83697HF
W83697HF-B
U10
Note:Smartfan
VTIN2->FANIO2->FANPWM2
PLANE CAP
FO EACH POWER PIN PLACE ONE CAP CLOSE TO
Hardware Monitor
CPU FAN
Q11 SI2303
Q9 2N7002S
Q10 X_FR9024NS
D2 1N4148S
D21 SM5817S
CPUFAN1 YJ103-BO
EC3 ELS47U/16V-C
MICRO-STAR INT'L CO.,LTD
W83697HF I/O & HWMONITOR
MS-6701
20A
Tuesday, March 04, 2003
Sheet 17 of 28

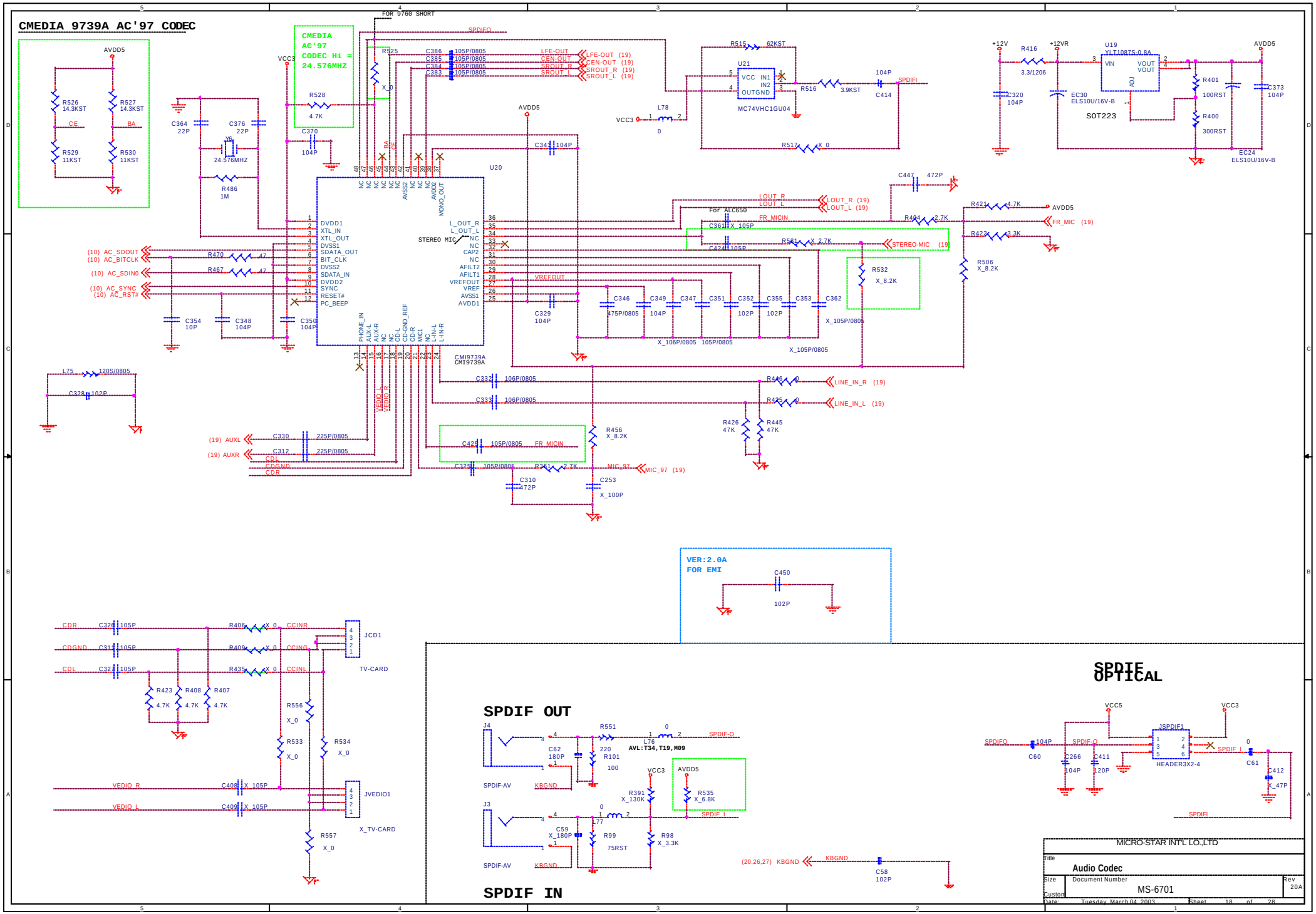
CMEDIA 9739A AC'97 CODEC
CMEDIA AC'97 CODEC Hi = 24.576MHZ
FOR 9760 SHORT
U20
CMI9739A
U21
MC74VHC1GU04
U19
YLT1087S-0.8A
SOT223
JCD1
TV-CARD
JVEDIO1
X_TV-CARD
VER:2.0A
FOR EMI
SPDIF OUT
SPDIF IN
SPDIF OPTICAL
JSPDIF1
HEADER3X2-4
MICRO-STAR INT'L CO.,LTD
Audio Codec
MS-6701
Tuesday, March 04, 2003
Sheet 18 of 28

SPEAKER OUT CIRCUIT

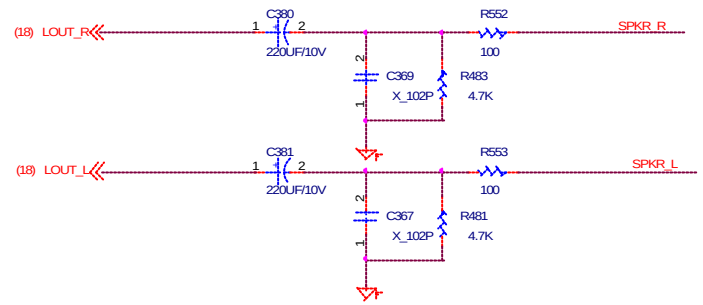

Audio Connector

N54-13F0011-K06
CN-IOC-JACKx3+PHONE-D13

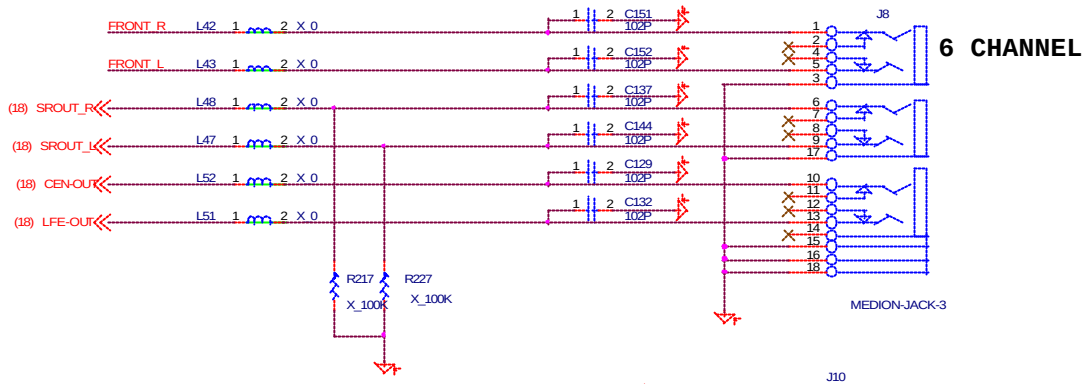

6 CHANNEL

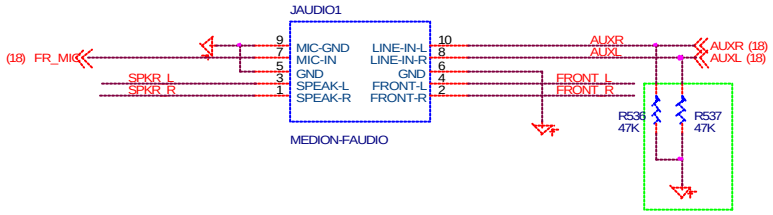

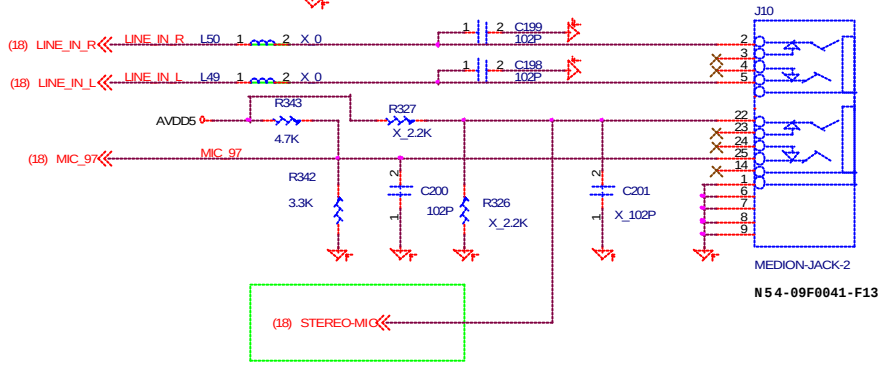

N54-09F0041-F13

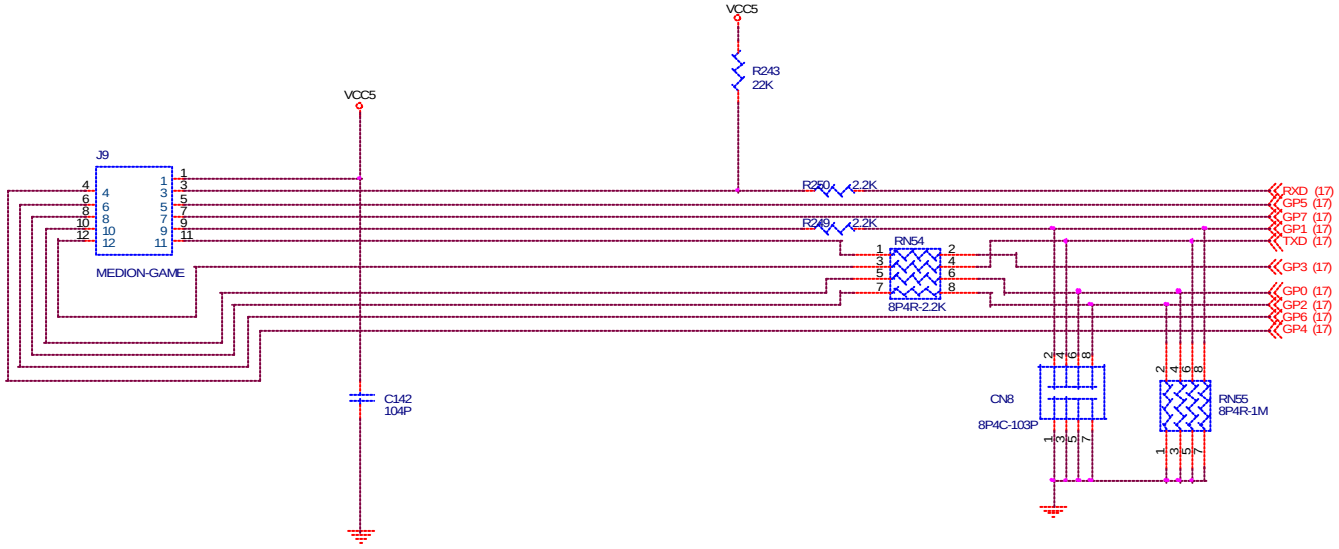

MICRO-STAR INT'L CO.,LTD.		
Title	AUDIO AMPLIFIER	
Size	Document Number MS-6701	Rev 20A
Date: Tuesday, March 04, 2003	Sheet 19 of 28	

USB PORT

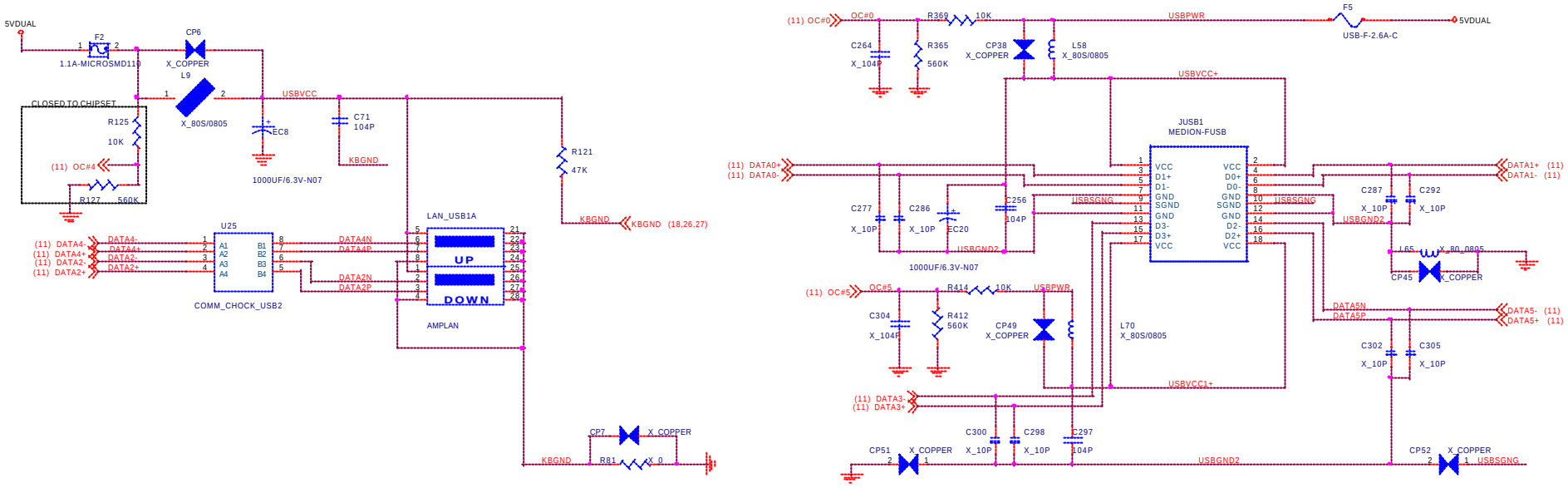

Flash Rom

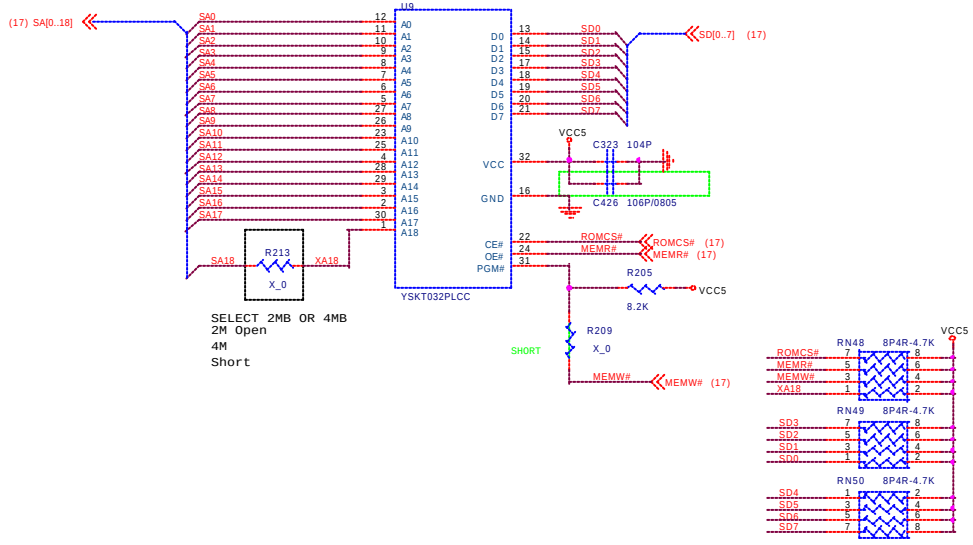

PCB OTHER COMPONENT

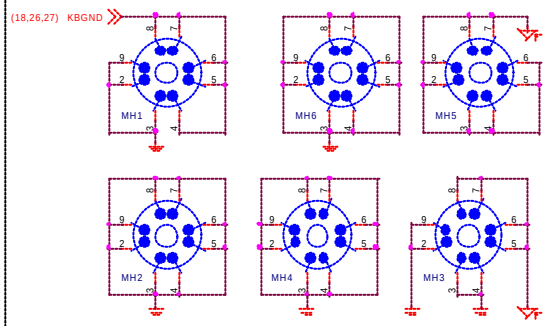

FIDUCIALS

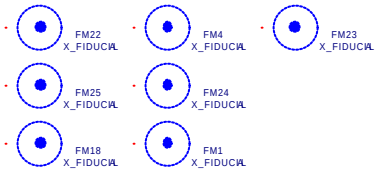

CHIP FIDUCIALS

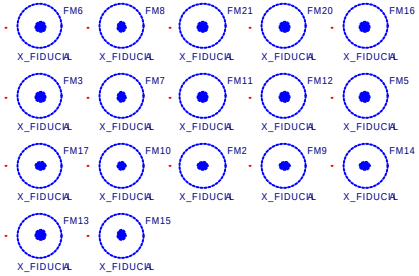

FOR TEST

CPU AGP

MICRO-STAR INT'L CO.,LTD	
Title	USB port & MS1
Size	Document Number: MS-6701
Rev	20A
Custom	
Date: Tuesday, March 04, 2003	Sheet 20 of 28

IEEE1394 PHY

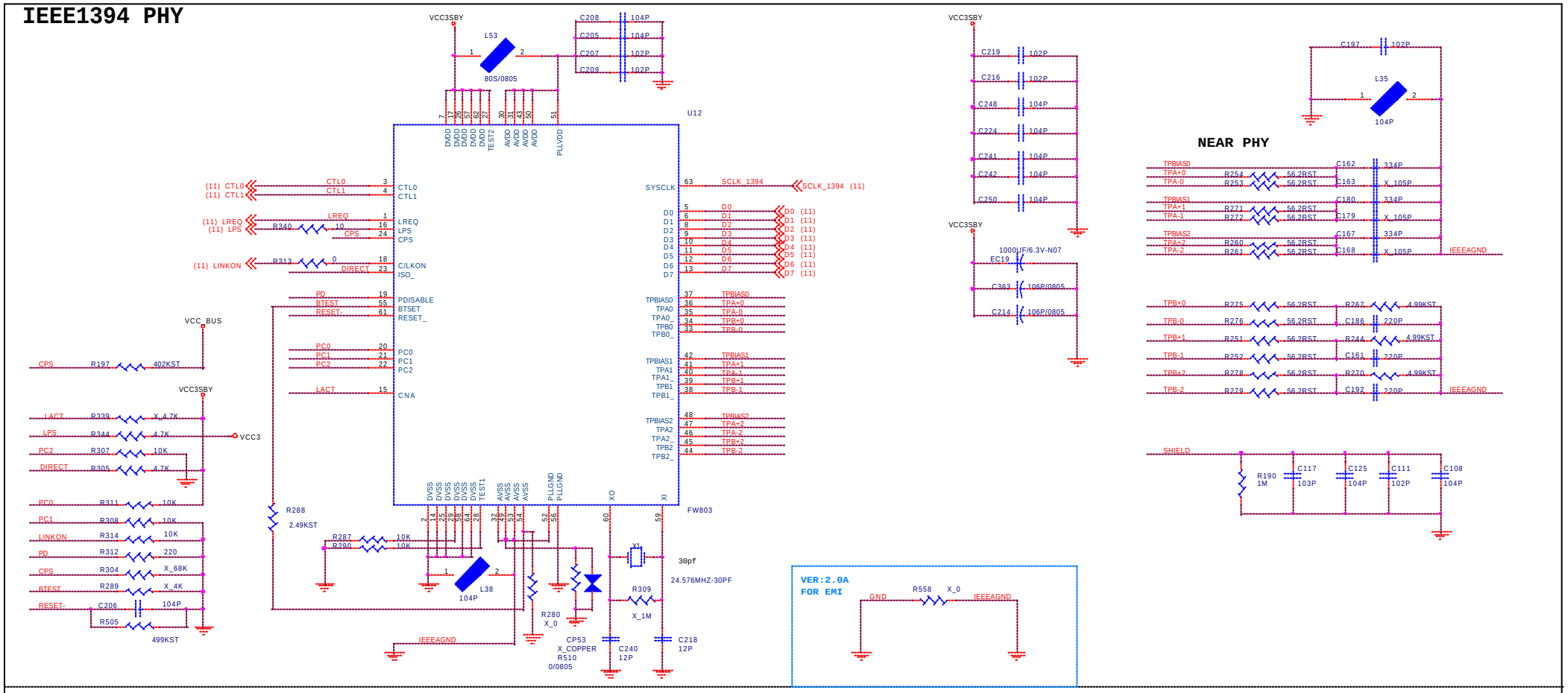

CONNECTOR(6PIN+4PIN+FRONT HEADER)

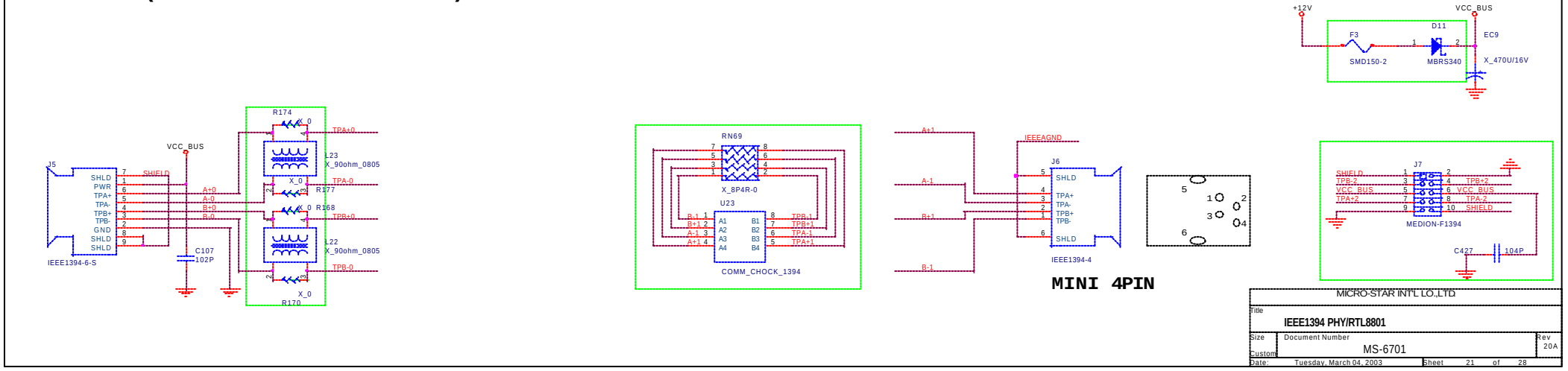

MICRO-STAR INT'L CO.,LTD

Title	IEEE1394 PHY/RTL8801	
Size: Custom	Document Number: MS-6701	Rev: 20A
Date: Tuesday, March 04, 2003	Sheet 21 of 28	

Fast Ethernet 1-Port PHY

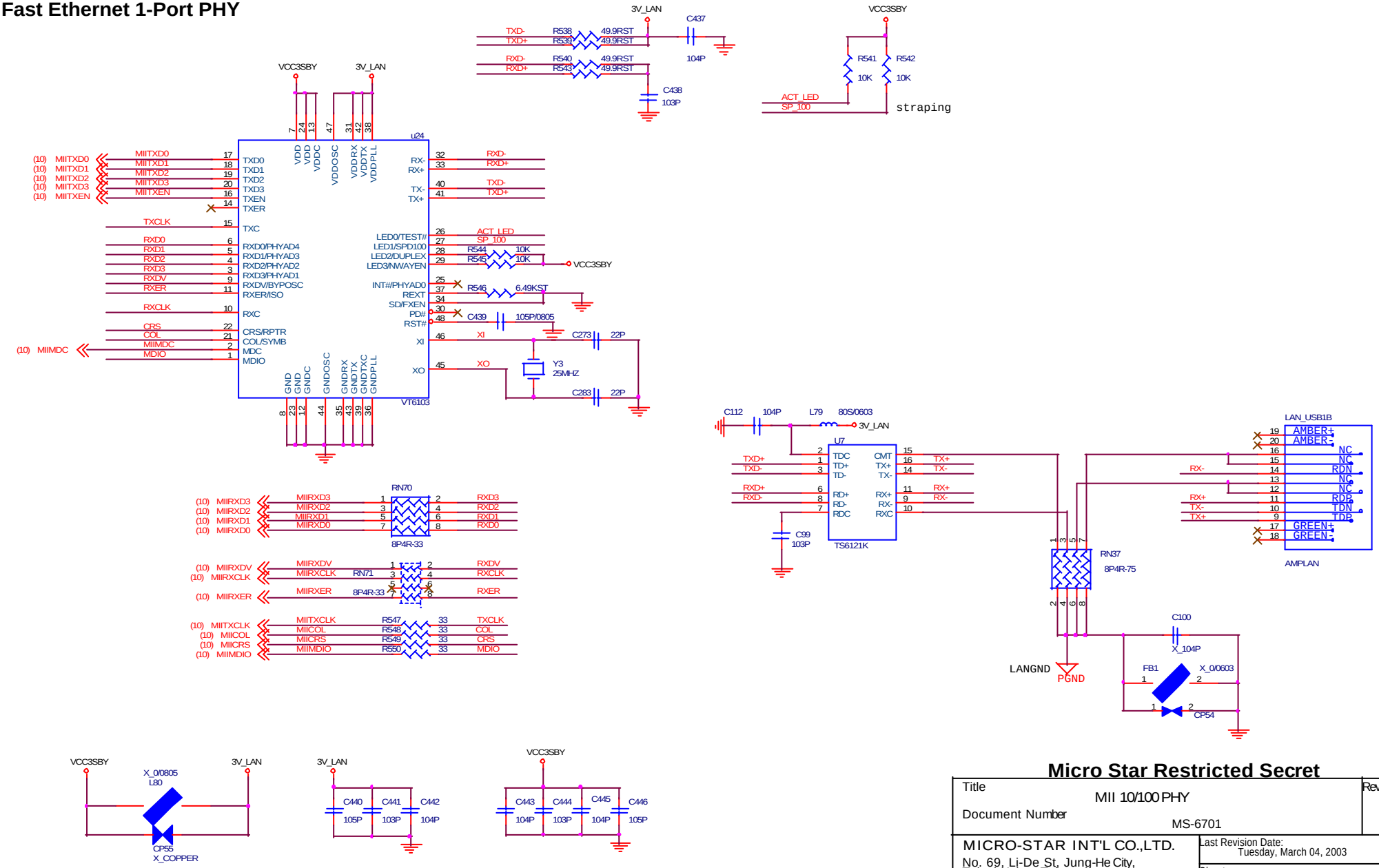

Micro Star Restricted Secret

Title	MII 10/100 PHY	Rev 20A
Document Number	MS-6701	
MICRO-STAR INT'L CO.,LTD. No. 69, Li-De St, Jung-He City, Taipei Hsien, Taiwan http://www.msi.com.tw	Last Revision Date: Tuesday, March 04, 2003	
	Sheet 22 of 28	

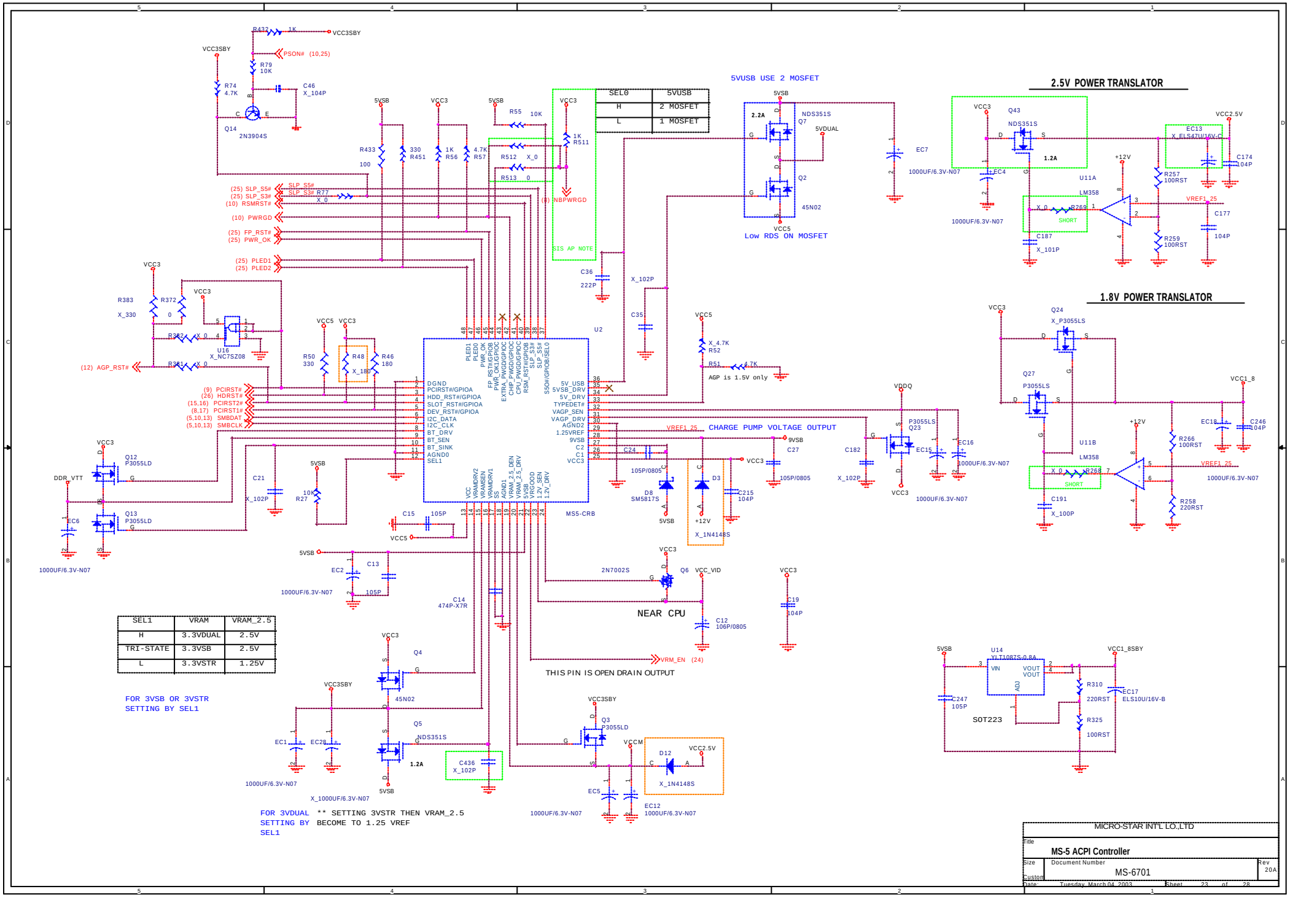

SEL0	5VUSB
H	2 MOSFET
L	1 MOSFET

SEL1	VRAM	VRAM_2.5
H	3.3VDUAL	2.5V
TRI-STATE	3.3VSB	2.5V
L	3.3VSTR	1.25V

VRM9.X

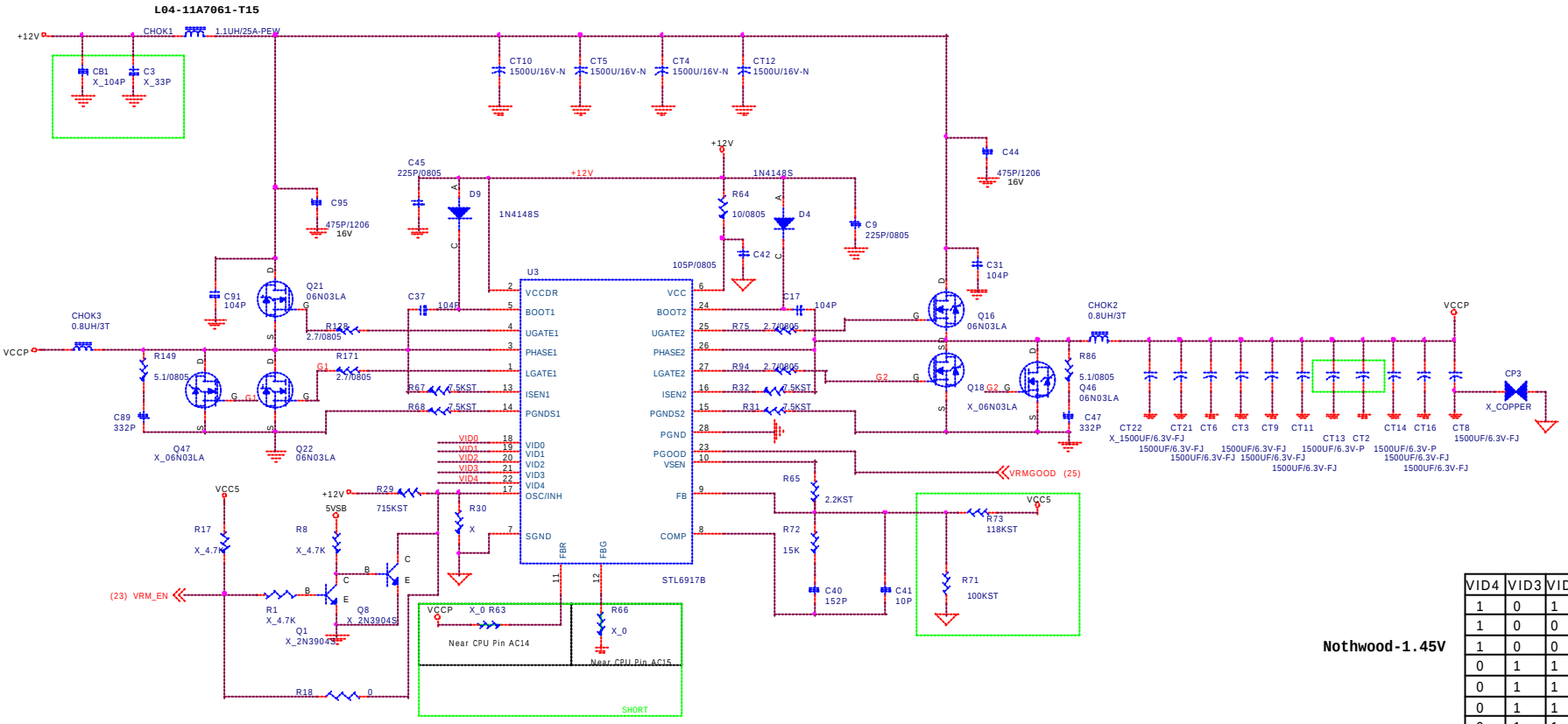

VID PULL-UP RESISTORS

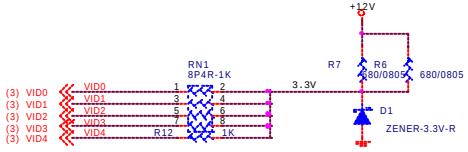

Iz=20mA

ATX12V POWER CONNECTOR

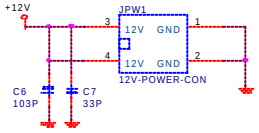

Nothwood-1.45V

VID4	VID3	VID2	VID1	VID0	VDC(V)
1	0	1	1	0	1.30
1	0	0	0	1	1.425
1	0	0	0	0	1.45
0	1	1	1	1	1.475
0	1	1	1	0	1.500
0	1	1	0	1	1.525
0	1	1	0	0	1.550
0	1	0	1	1	1.575
0	1	0	1	0	1.600
0	1	0	0	1	1.625

Willamette-1.75V

VID4	VID3	VID2	VID1	VID0	VDC(V)
0	1	0	0	0	1.650
0	0	1	1	1	1.675
0	0	1	1	0	1.70
0	0	1	0	1	1.725
0	0	1	0	0	1.75
0	0	0	1	1	1.775
0	0	0	1	0	1.80
0	0	0	0	1	1.825
0	0	0	0	0	1.85
1	1	1	1	1	OFF

MICRO-STAR INT'L CO.,LTD

Title: VRM 9.0

Size: Custom | Document Number: MS-6701 | Rev: 20A

Date: Tuesday, March 04, 2003 | Sheet 24 of 28

ATX CONNECTOR

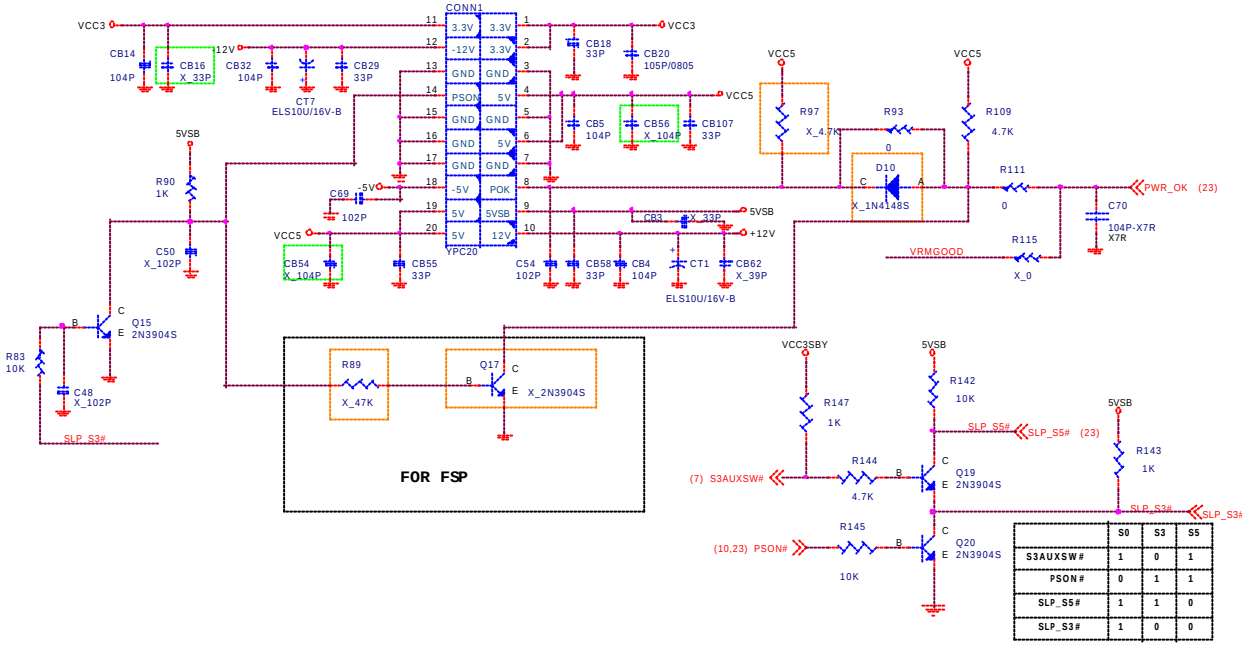

	S0	S3	S5
S3AUXSW#	1	0	1
PSON#	0	1	1
SLP_S5#	1	1	0
SLP_S3#	1	0	0

Brookdale FRONT PANEL-M

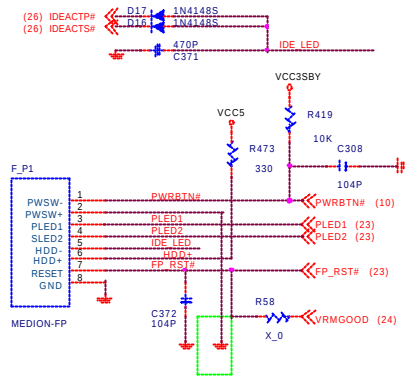

SPEAKER

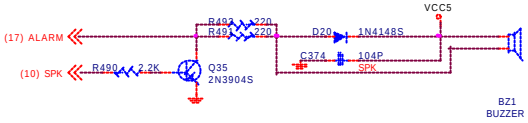

System Decoupling Capacitors

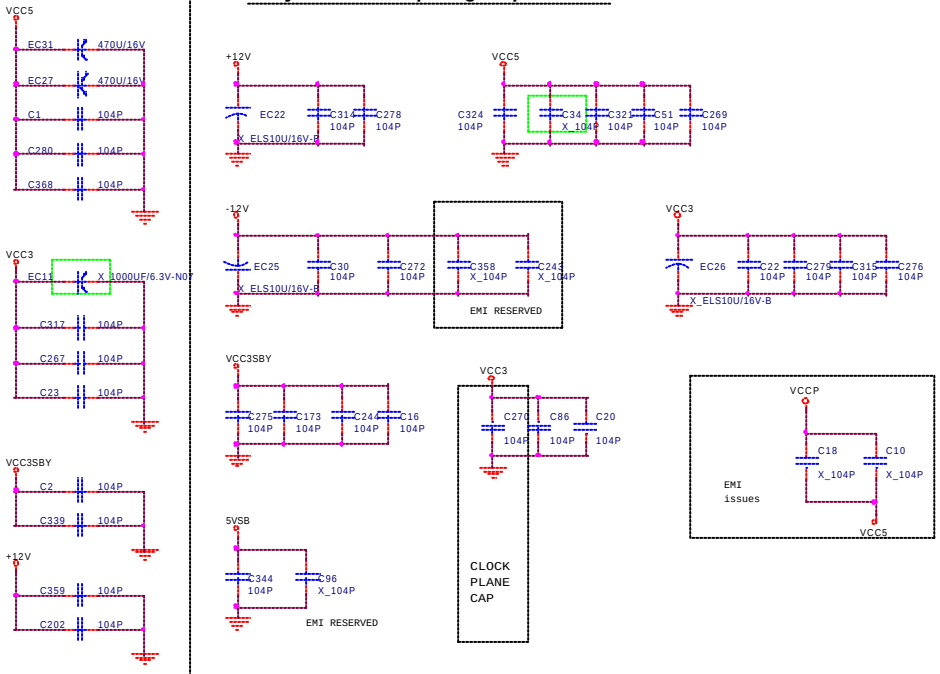

High Freq. return current decoupling

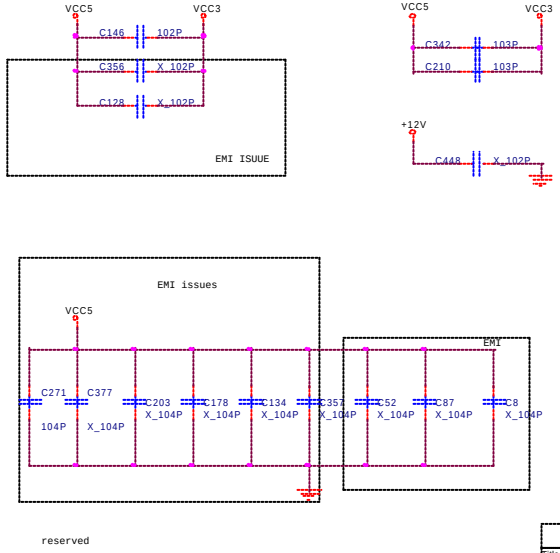

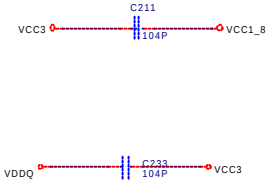

MICRO-STAR INT'L CO.,LTD

Title: ATX & F-panel & Audio port

Size: Custom | Document Number: MS-6701 | Rev: 20A

Date: Tuesday, March 04, 2003 | Sheet 25 of 28

IDE1 & IDE2

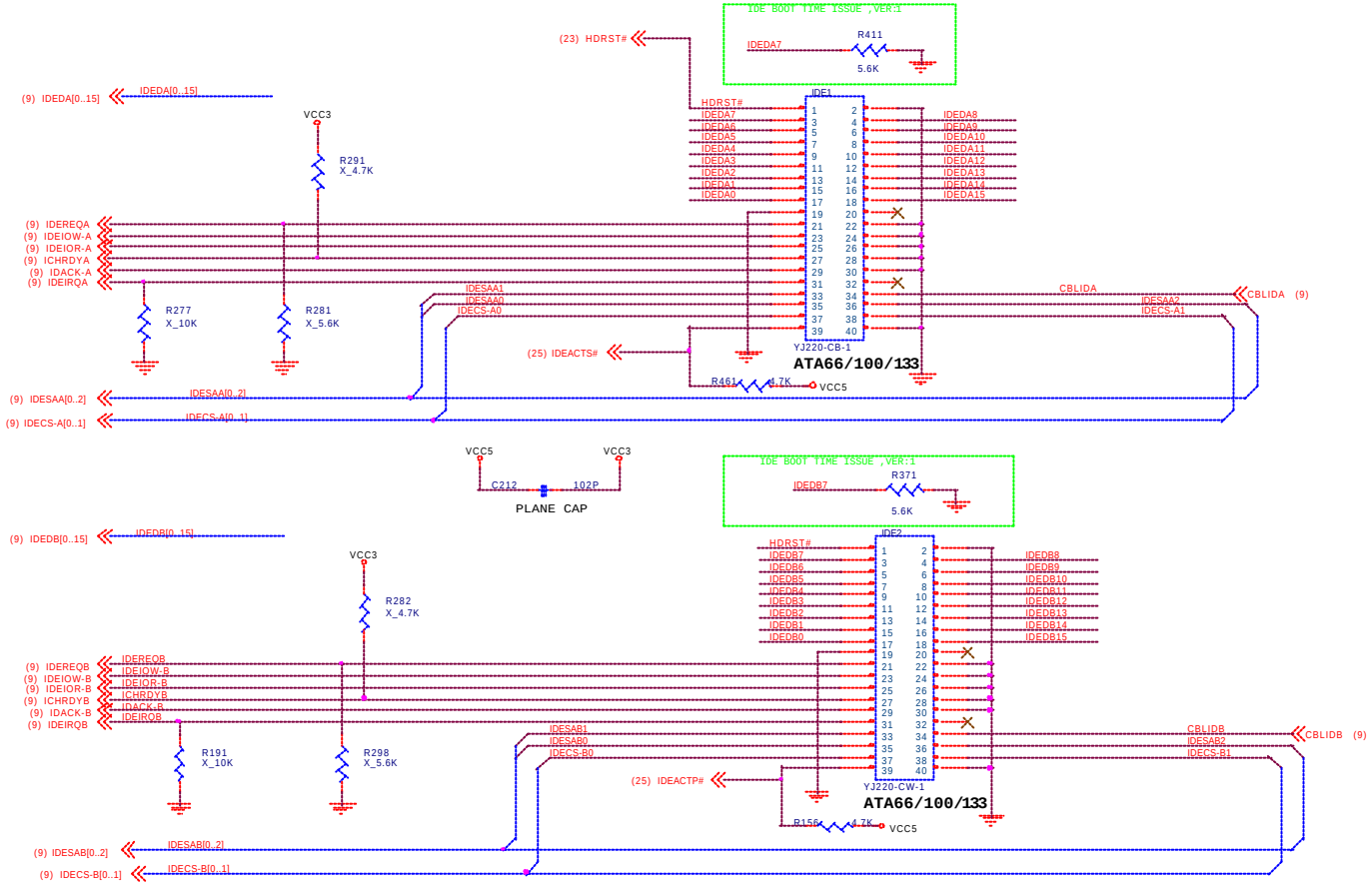

PS2 KB/MS

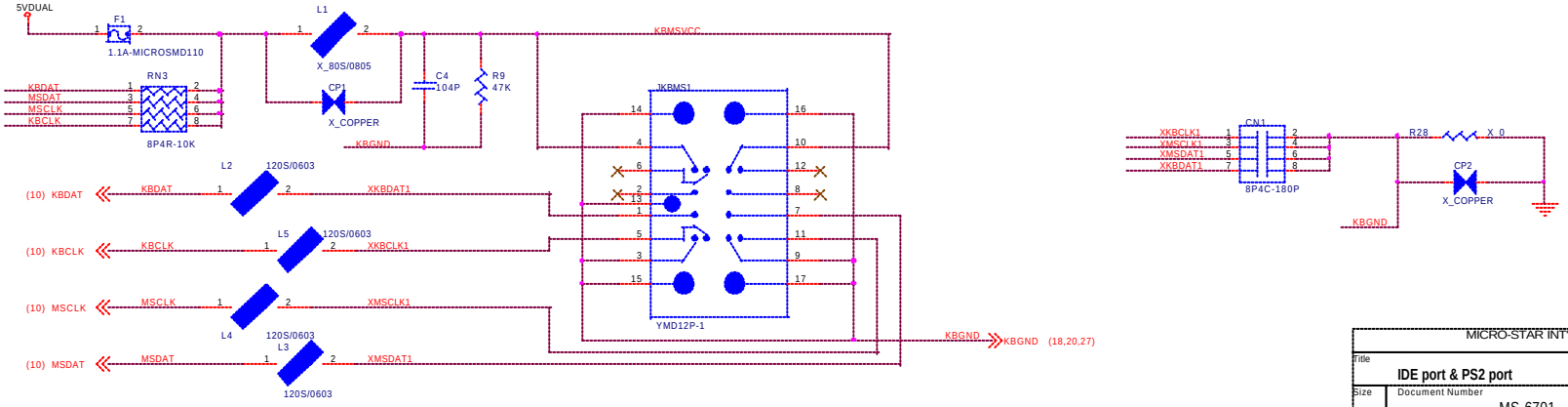

MICRO-STAR INT'L CO.,LTD	
Title	IDE port & PS2 port
Size / Document Number	MS-6701
Rev	20A
Custom	
Date: Tuesday, March 04, 2003	Sheet 26 of 28

Parallel Port & COM1

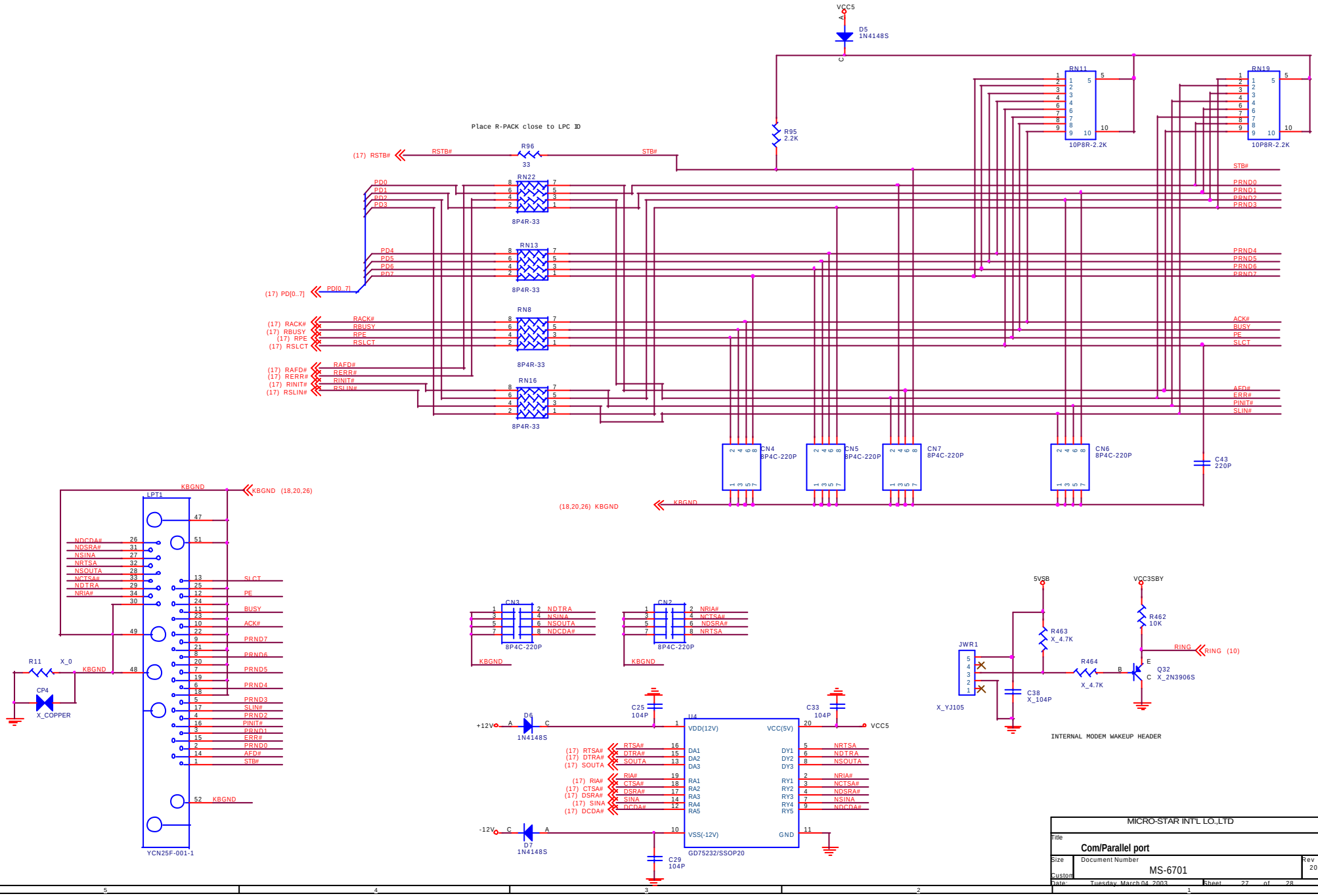

MICRO-STAR INT'L CO.,LTD	
Title	Com/Parallel port
Size	Document Number: MS-6701
Rev	20A
Custom	
Date: Tuesday, March 04, 2003	Sheet 27 of 28

MANUAL PART

M31-4900228-W03

MS-6701-20A

SIS_648_H

SSTHEATSINK-S

SSTHEATSINK-S

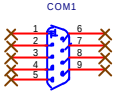

YCN9M-1

YJUMPER-MG

1-2 ENABLED

2-3 CLEAR CMOS

JC-D2x2-GN

JAUDIO1(1-2),(3-4)

FP_1

1-2 PS-ON

3-4 PWR LED

5-6 HDD LED (6+)

7-8 RESET

P4-BRACKET-2

P4-RM-2

P4-SCREW-2

P4-SCREW-2

P4-SCREW-2

P4-SCREW-2

COMPONENT CHANGED LIST

MICRO-STAR INT'L CO.,LTD		
Title: Manual Part		
Size: Custom	Document Number: MS-6701	Rev: 20A
Date: Tuesday, March 04, 2003	Sheet 28 of 28	