MS6700 *VERSION:100*

SIS 648 CHIPSET
Willamette/Northwood 478pin mPGA-B Processor Schematics

CPU:
Willamette/Northwood mPGA-478B Processor

System Brookdale Chipset:

SIS 648 (North Bridge)+963/963L (South Bridge)

On Board Chipset:

LPC Super I/O -- W83697HF
REALTEK 1394 PHY

Expansion Slots:

AGP2.0 SLOT * 1
PCI2.2 SLOT* 3

Cover Sheet	1
Block Diagram	2
MAIN CLOCK GEN & DDR CLOCK BUFFER	3
mPGA478-B INTEL CPU Sockets	4 - 5
SIS 648 NORTH BRIDGE	6 - 9
DDR SLOT	10
DDR TERMINATOR	11
SIS 963 SOUTH BRIDGE	12 - 14
AGP SLOT	15
PCI SLOTS	16
LAN CONTROLLER	17
RJ45 CONNECTOR	18
IDE CONNECTOR	19
USB CONNECTOR	20
AC'97 CODEC	21
AUDIO CONNECTOR	22
6 CHANNEL & FAN	23
LPC I/O(W83697HF)	24
PARALLEL & SERIAL PORT	25
VRM 9.X	26
ACPI CONTROLLER	27
ATX POWER CON	28
FRONT PANEL	29
IEEE 1394	30
Decoupling Capacitor	31

System Block Diagram

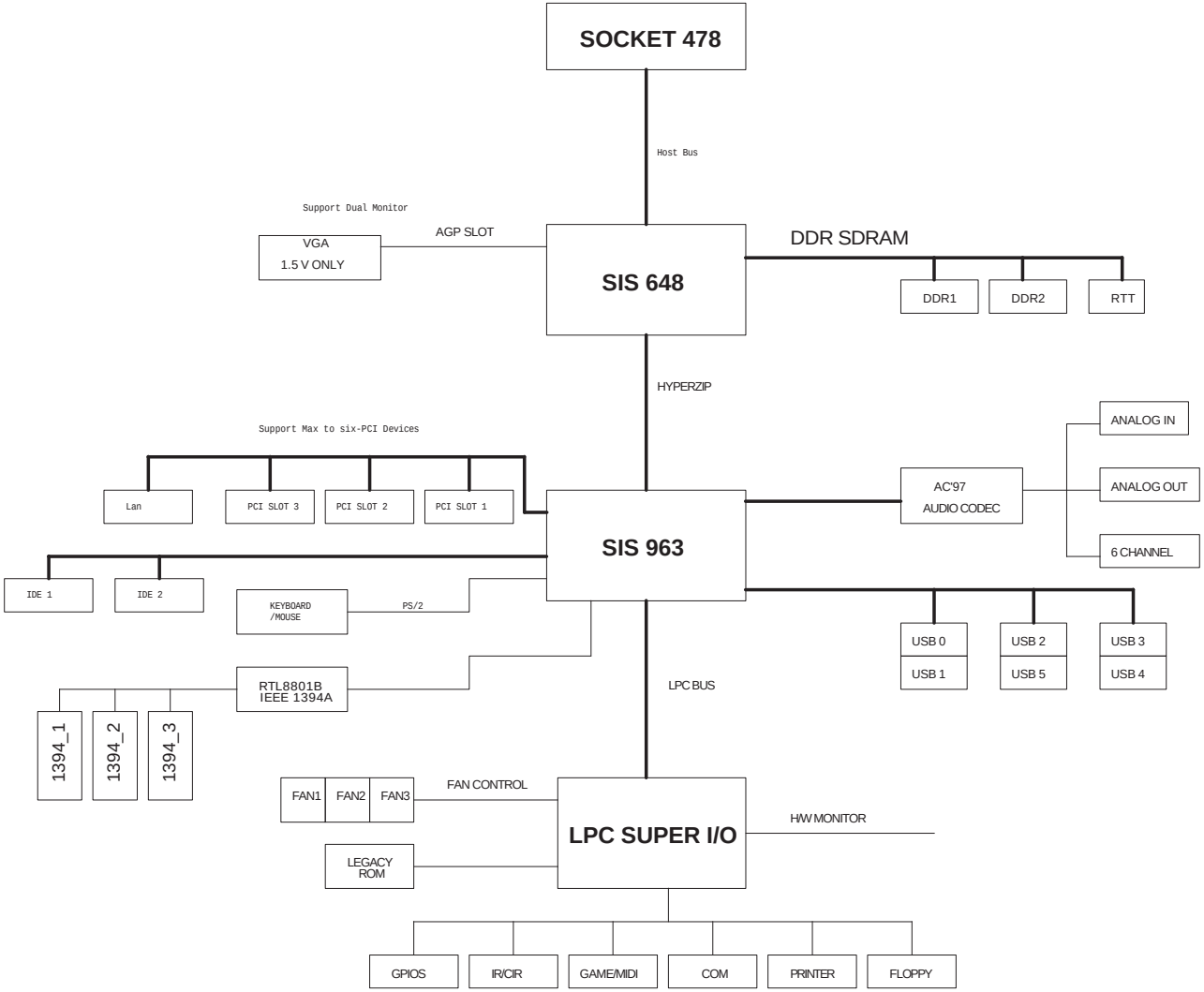

GPIO Table on SIS963

GPIO_0	I/O	MAIN	Pull-Down
GPIO_1	I/O	MAIN	Pull-Down
GPIO_2	I/O	MAIN	THERM#
GPIO_3	I/O	MAIN	EXTSMI#
GPIO_4	I/O	MAIN	Pull-Down
GPIO_5	I/O	MAIN	PREQ#5(Pull-Up)
GPIO_6	I/O	MAIN	PGNT#5(Pull-Up)
GPI_7	I/O	RESUME	LAN_WAKE#
GPI_8	I	RESUME	RING
GPI_9	I	RESUME	RESERVED
GPI_10	I	RESUME	RESERVED
GPIO_11	I/O	RESUME	RESERVED
GPIO_12	I/O	RESUME	Pull-Down
GPIO_13	I/O	RESUME	Flash Rom protection H: Disable, L: Enable
GPIO_14	I/O	RESUME	Pull-Down
GPIO_15	I/O	RESUME	KBDAT
GPIO_16	I/O	RESUME	KBCLK
GPIO_17	I/O	RESUME	MSDAT
GPIO_18	I/O	RESUME	MSCLK
GPIO_19	I/O	RESUME	SMBCLK
GPIO_20	I/O	RESUME	SMBDAT

Main Clock Generator

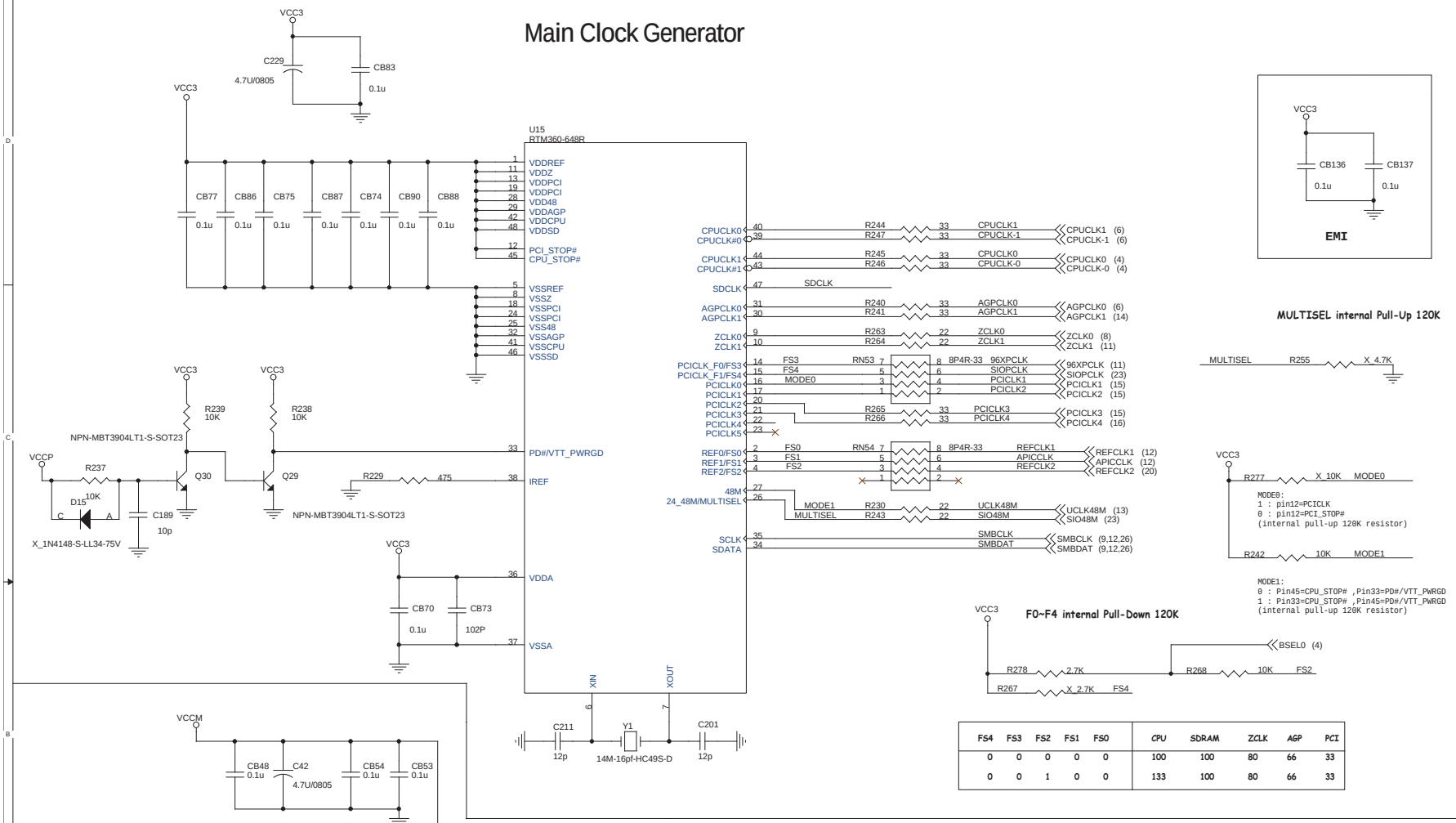

FS4	FS3	FS2	FS1	FS0	CPU	SDRAM	ZCLK	AGP	PCI
0	0	0	0	0	100	100	80	66	33
0	0	1	0	0	133	100	80	66	33

Clock Buffer (DDR)

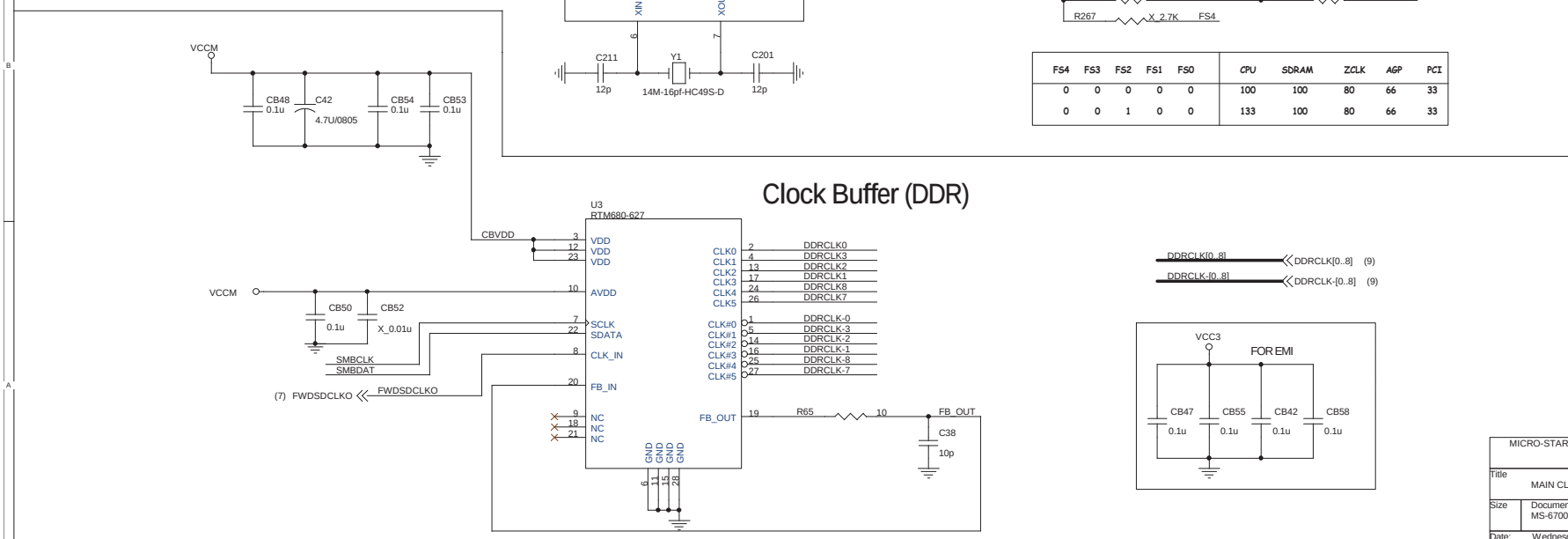

CPUCLK0	R232	49.9	
CPUCLK-0	R233	49.9	
CPUCLK1	R234	49.9	
CPUCLK-1	R235	49.9	
SDCLK	C194	10p_0603	
AGPCLK0	C190	10p_0603	
AGPCLK1	C191	10p	
ZCLK0	C232	10p_0603	
ZCLK1	C233	10p_0603	
PCICLK2	CN25 1	2	
PCICLK1	3	4	
SIOPCLK	5	6	
96XPCLK	7	8	
PCICLK4	C231	10p_0603	
PCICLK3	C230	10p_0603	
REFCLK2	CN26 1	2	
APICCLK	3	4	
REFCLK1	5	6	
	7	8	
UCLK48M	C192	10p	
SIO48M	C195	10p	
DDRCLK0	C52	X_10p	
DDRCLK1	C36	X_10p	
DDRCLK2	C44	X_10p	
DDRCLK3	C53	X_10p	
DDRCLK8	C35	X_10p	
DDRCLK7	C33	X_10p	
DDRCLK-0	C51	X_10p	
DDRCLK-1	C37	X_10p	
DDRCLK-2	C45	X_10p	
DDRCLK-3	C54	X_10p	
DDRCLK-8	C34	X_10p	
DDRCLK-7	C32	X_10p	

MICRO-STAR INT'L CO.,LTD.

Title: MAIN CLOCK GEN & BUFFER

Size | Document Number: MS-6700 | Rev: 100

Date: Wednesday, November 06, 2002 | Sheet 3 of 30

CPU SIGNAL BLOCK

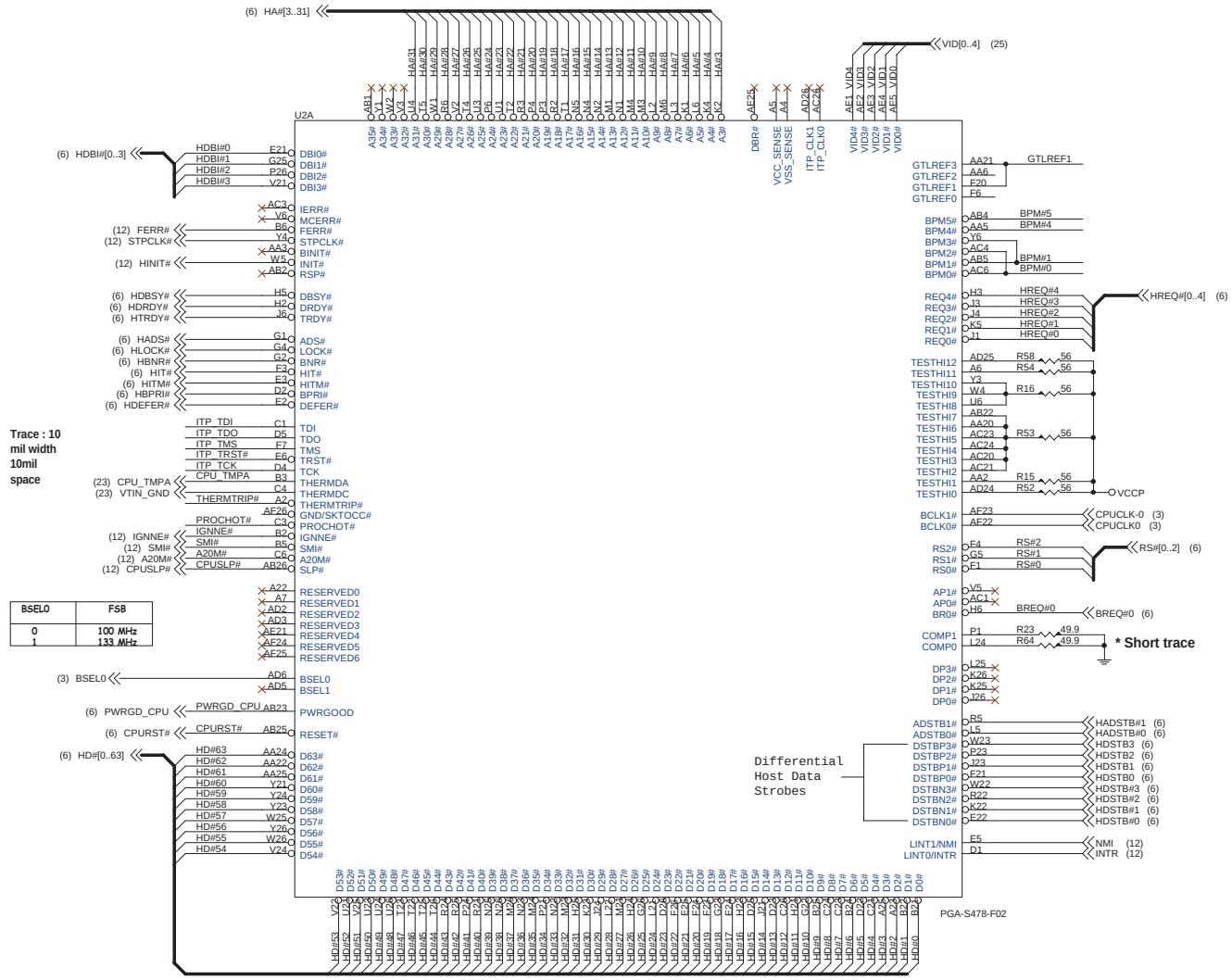

BSEL0	FSB
0	100 MHz
1	133 MHz

CPU GTL REFERNCE VOLTAGE BLOCK

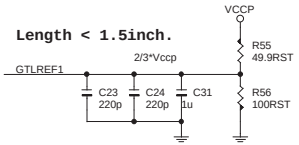

Every pin put one 220pF cap near it.
Trace Width 15mils, Space 15mils.
Keep the voltage dividers within 1.5 inches of the first GTLREF Pin

CPU ITP BLOCK

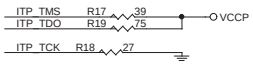

CPU STRAPPING RESISTORS

CLOSED TO SOCKET478

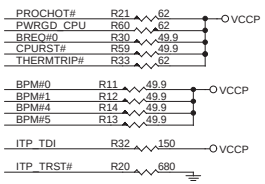

CLOSED TO SOCKET478

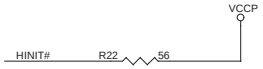

MICRO-STAR INT'L CO.,LTD.			
Title: mPGA478 CPU-1			
Size	Document Number: MS-6700		Rev: 100
Date: Wednesday, November 06, 2002	Sheet 4 of 30		

CPU VOLTAGE BLOCK

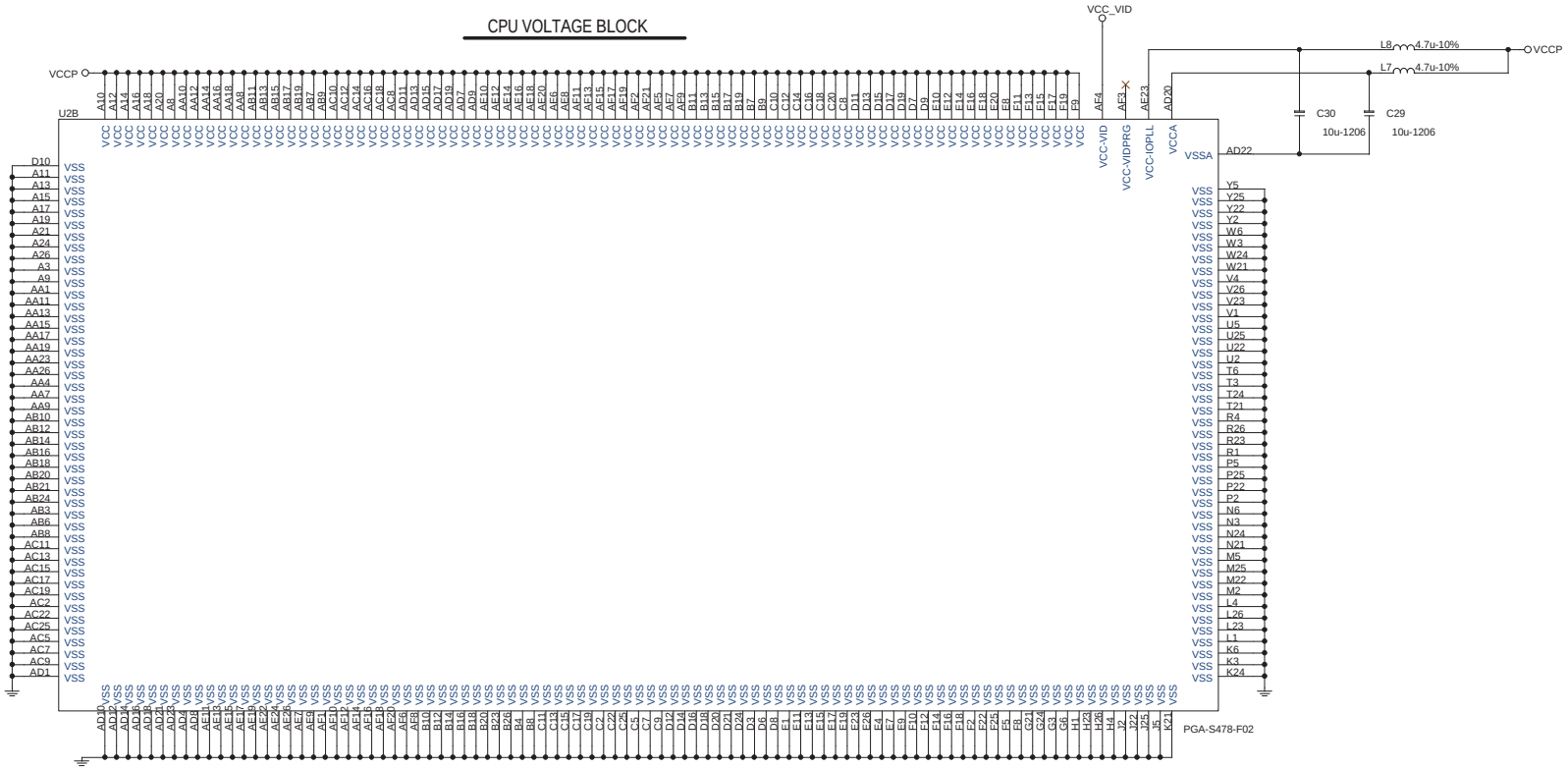

CPU DECOUPLING CAPACITORS

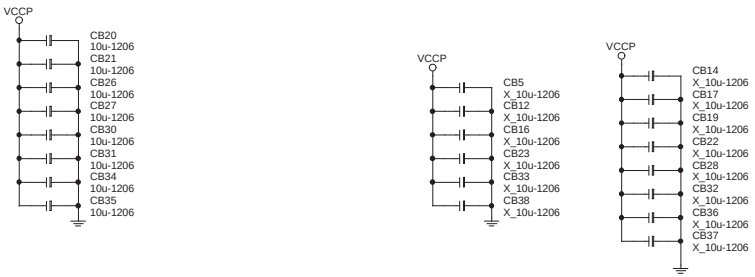

PLACE CAPS WITHIN CPU CAVITY

MICRO-STAR INT'L CO.,LTD.			
Title: mPGA478 CPU-2			
Size	Document Number: MS-6700		Rev: 100
Date: Wednesday, November 06, 2002	Sheet 5 of 30		

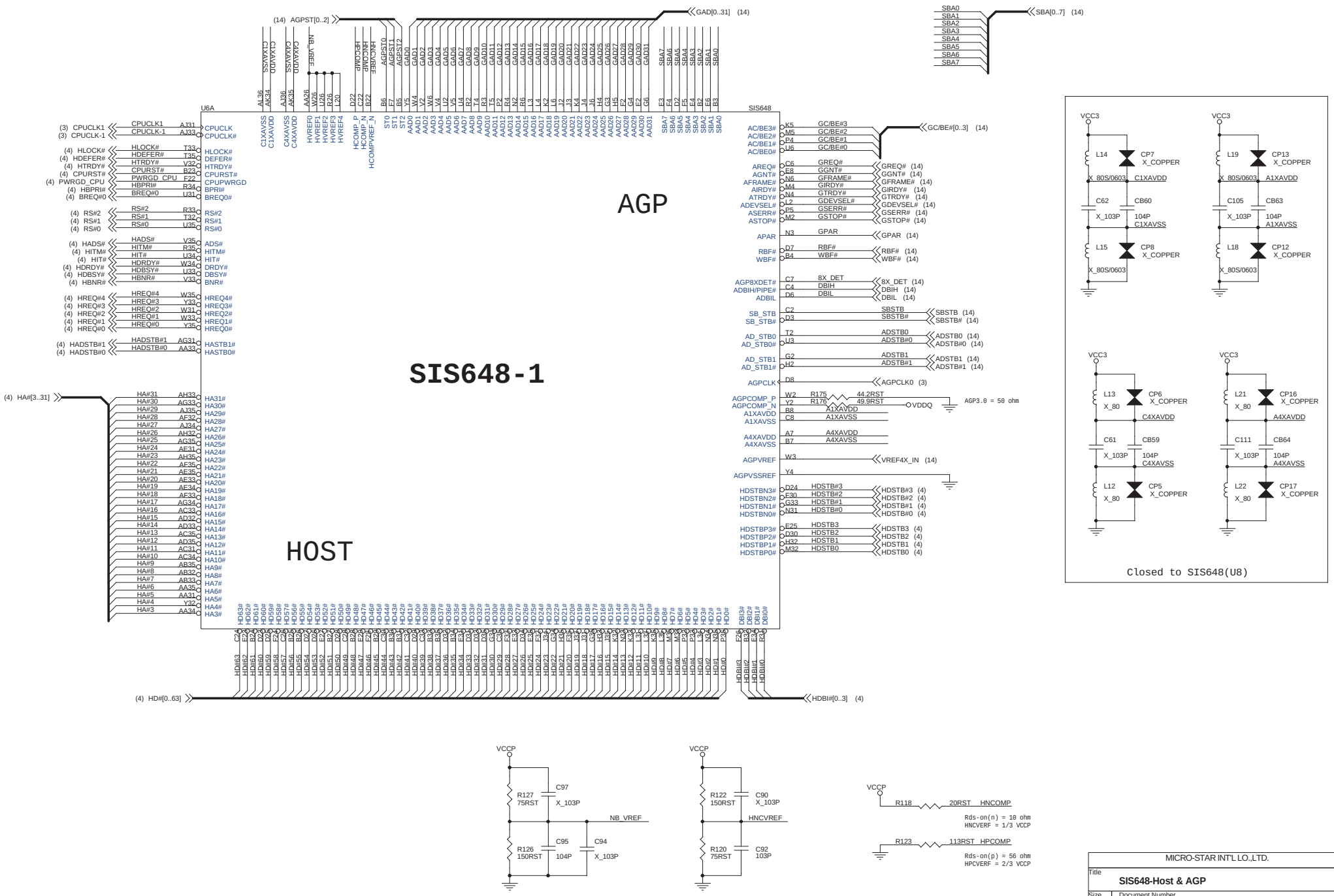

MICRO-STAR INT'L CO.,LTD.	
Title	SIS648-Host & AGP
Size: Custom	Document Number: MS-6700
Rev	100
Date: Wednesday, November 06, 2002	Sheet 6 of 30

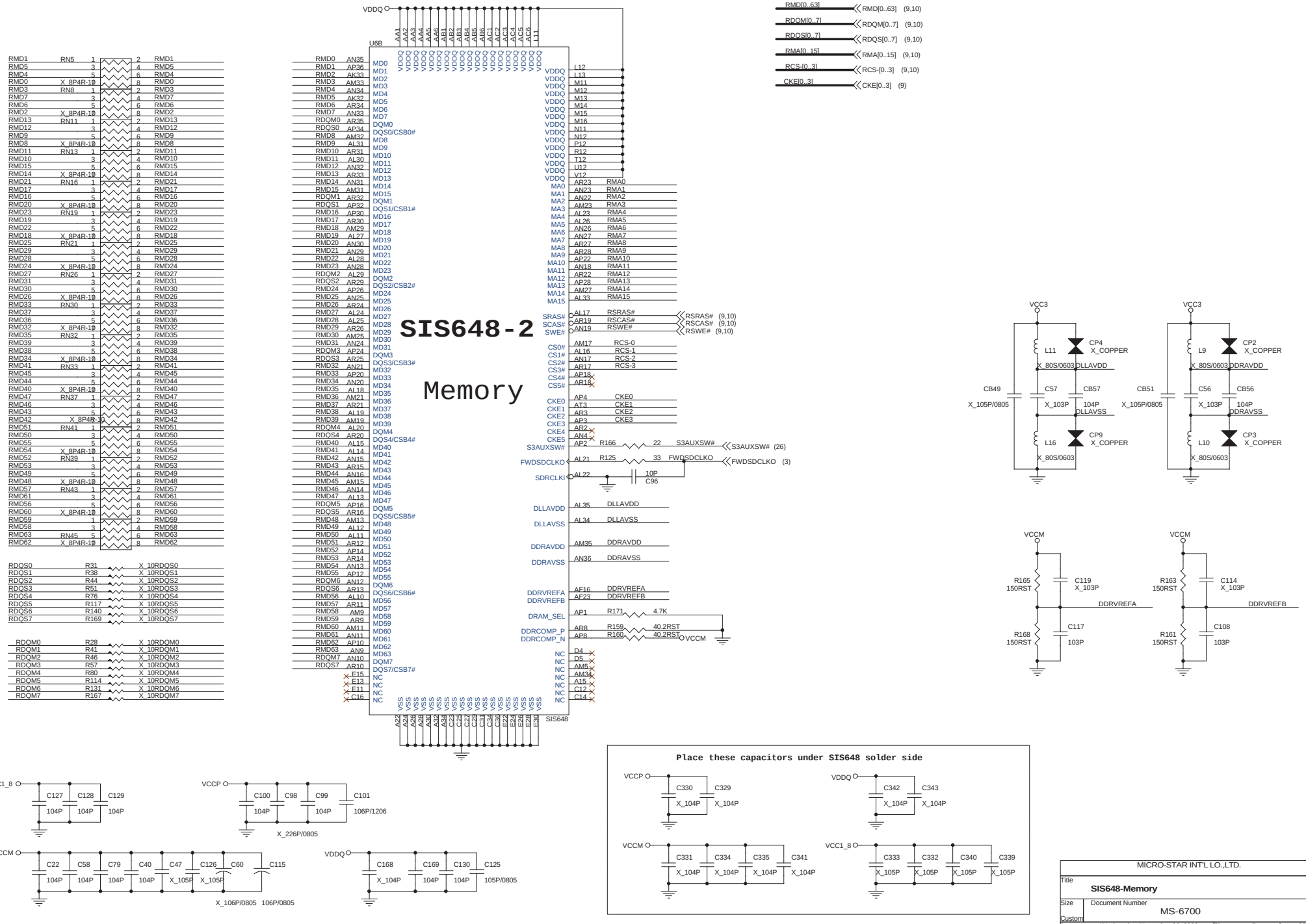
SIS648-2
Memory
U6B
SIS648
VDDQ
RMD[0..63] RMD[0..63] (9,10)
RDQM[0..7] RDQM[0..7] (9,10)
RDQS[0..7] RDQS[0..7] (9,10)
RMA[0..15] RMA[0..15] (9,10)
RCS-[0..3] RCS-[0..3] (9,10)
CKE[0..3] CKE[0..3] (9)
RSRAS# (9,10)
RSCAS# (9,10)
RSWE# (9,10)
S3AUXSW# (26)
FWDSDCLKO (3)
VCC3
VCCM
VCC1_8
VCCP
DDRVREFA
DDRVREFB
Place these capacitors under SIS648 solder side
MICRO-STAR INT'L LO.,LTD.
Title
SIS648-Memory
Size
Document Number
MS-6700
Rev
100
Custom
Date: Wednesday, November 06, 2002
Sheet 7 of 30

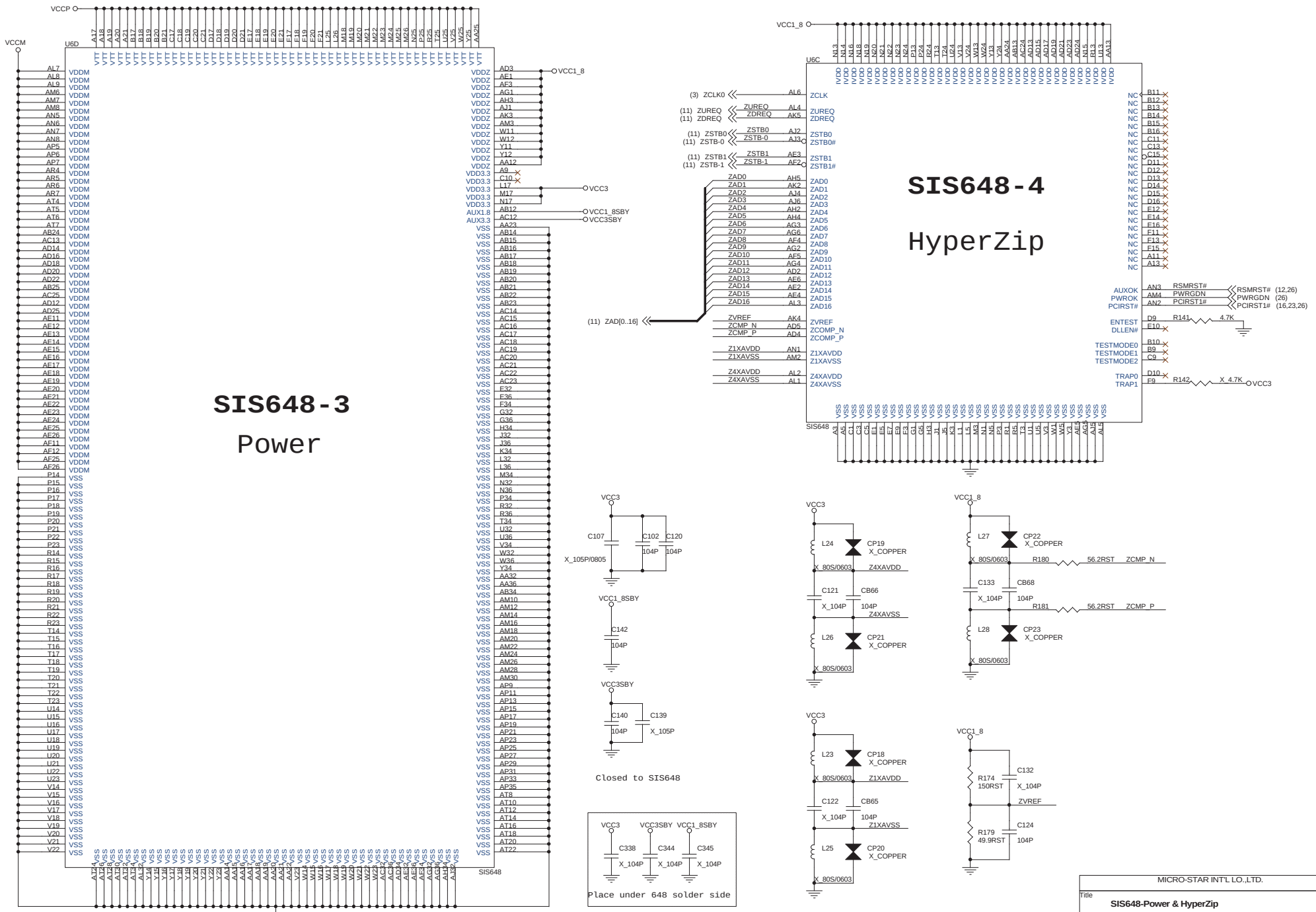
SIS648-3
Power
U6D
SIS648
SIS648-4
HyperZip
U6C
SIS648
VCCP
VCCM
VCC1_8
VCC3
VCC1_8SBY
VCC3SBY
(3) ZCLK0
(11) ZUREQ
(11) ZDREQ
(11) ZSTB0
(11) ZSTB-0
(11) ZSTB1
(11) ZSTB-1
(11) ZAD[0..16]
RSMRST# (12,26)
PWRGDN (26)
PCIRST1# (16,23,26)
R141 4.7K
R142 X_4.7K
C107 X_105P/0805
C102 104P
C120 104P
C142 104P
C140 104P
C139 X_105P
Closed to SIS648
L24 CP19 X_COPPER
X_80S/0603 Z4XAVDD
C121 X_104P
CB66 104P
Z4XAVSS
L26 CP21 X_COPPER
L27 CP22 X_COPPER
R180 56.2RST ZCMP_N
C133 X_104P
CB68 104P
R181 56.2RST ZCMP_P
L28 CP23 X_COPPER
L23 CP18 X_COPPER
Z1XAVDD
C122 X_104P
CB65 104P
Z1XAVSS
L25 CP20 X_COPPER
R174 150RST
C132 X_104P
ZVREF
R179 49.9RST
C124 104P
C338 X_104P
C344 X_104P
C345 X_104P
Place under 648 solder side
MICRO-STAR INT'L LO.,LTD.
Title
SIS648-Power & HyperZip
Size
Custom
Document Number
MS-6700
Rev
100
Date: Wednesday, November 06, 2002
Sheet 8 of 30

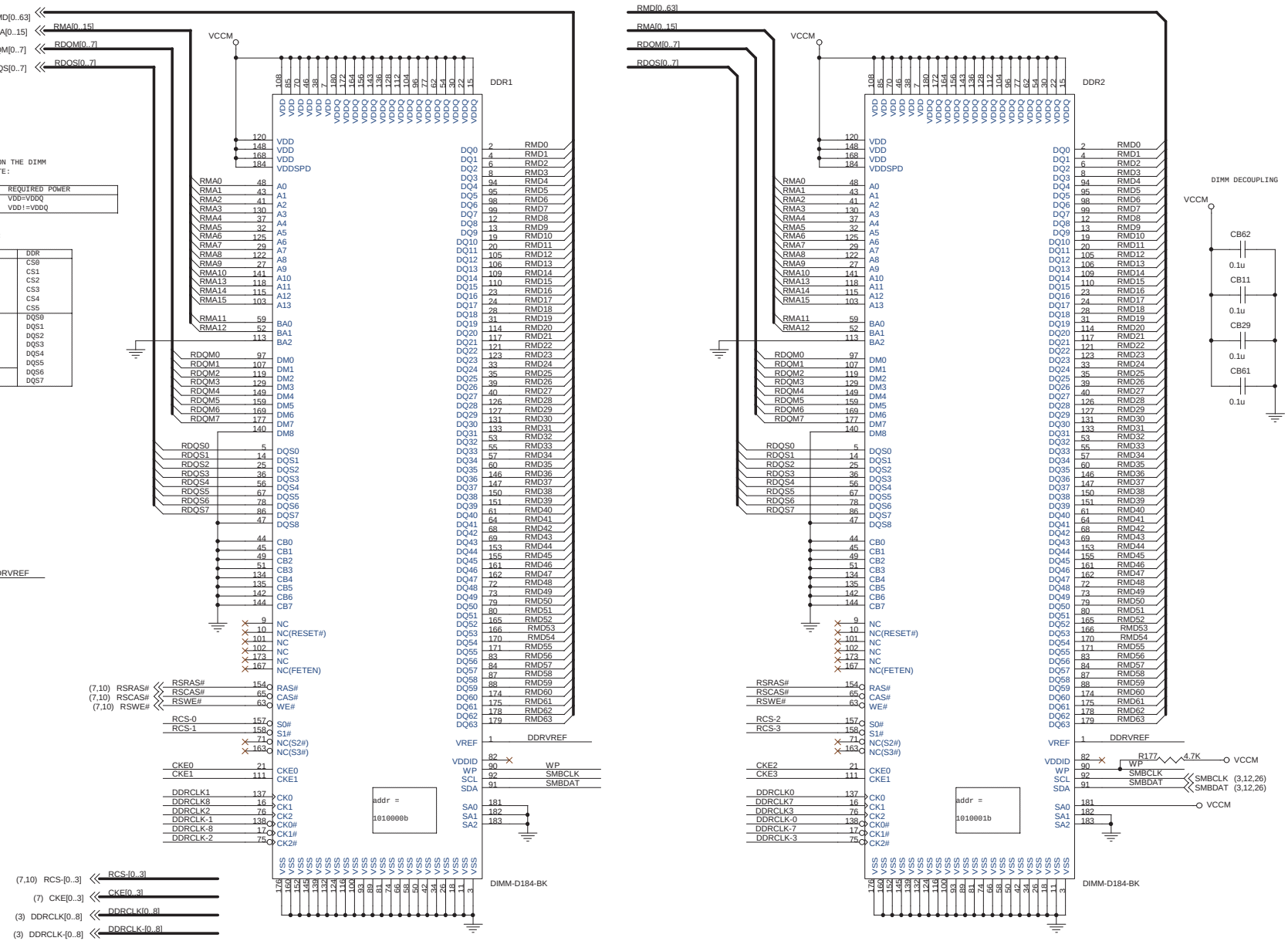

NOTE:

VDDID IS A TRAP ON THE DIMM MODULE TO INDICATE:

VDDID	REQUIRED POWER
OPEN	VDD=VDDQ
GND	VDD!=VDDQ

MEMORY MUX TABLE:

SDR	DDR
CS0	CS0
CS1	CS1
CS2	CS2
CS3	CS3
CS4	CS4
CS5	CS5
CSB0	DQS0
CSB1	DQS1
CSB2	DQS2
CSB3	DQS3
CSB4	DQS4
CSB5	DQS5
CSB6	DQS6
CSB7	DQS7

MICRO-STAR INT'L CO.,LTD.	
Title	DDR1 & DDR2
Size	Document Number MS-6700
Rev	100
Date: Wednesday, November 06, 2002	Sheet 9 of 30

DDR TERMINATOR

SSTL-2 Termination Resistors

RMD[0..63] — RMD[0..63] (7,9)
RDQM[0..7] — RDQM[0..7] (7,9)
RDQS[0..7] — RDQS[0..7] (7,9)
RMA[0..15] — RMA[0..15] (7,9)
RCS-[0..3] — RCS-[0..3] (7,9)

	SDR		DDR		
		Rs		Rs	Rtt
MD/DQM(/DQS)	LV-CMOS	0/10/-	SSTL-2	10	33
MA/Control	LV-CMOS	10	SSTL-2	0	33
CS	LV-CMOS	0	SSTL-2	0	47
CKE	DD 3.3V		DD 2.5V		

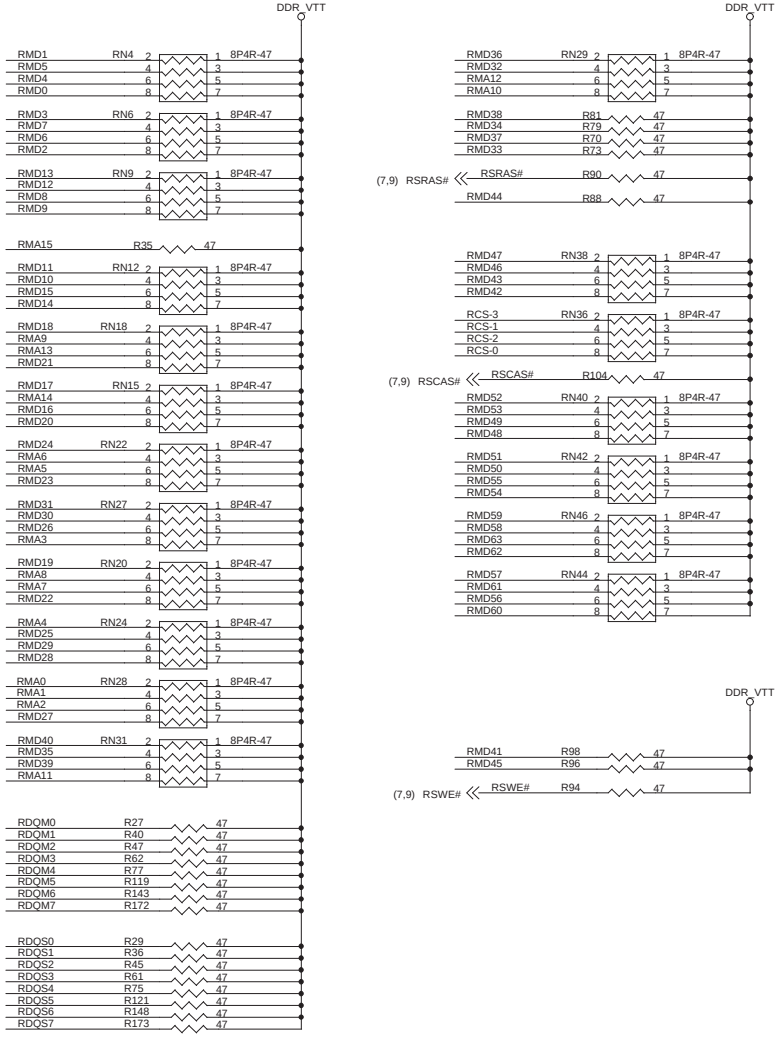

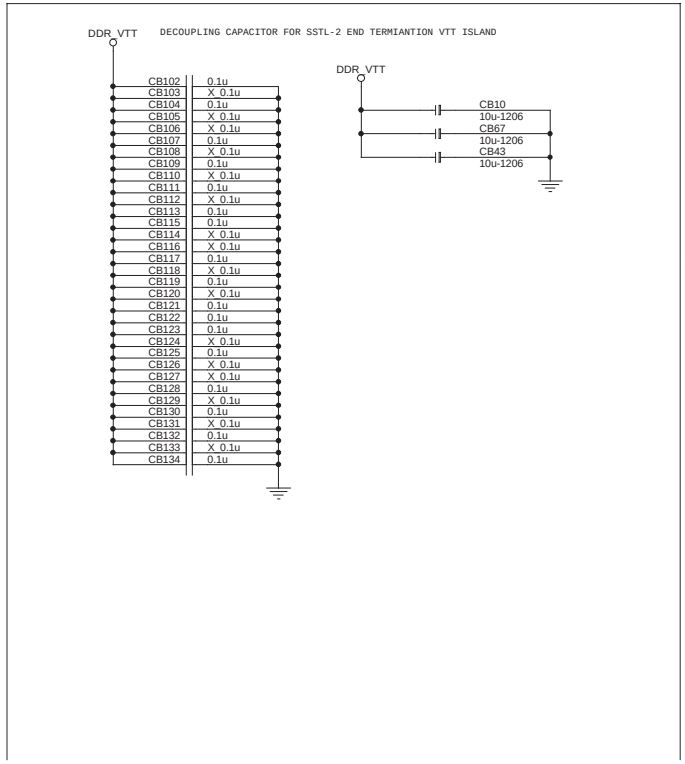

MICRO-STAR INT'L CO.,LTD.			
Title: DDR TERMINATOR			
Size	Document Number: MS-6700		Rev: 100
Date: Wednesday, November 06, 2002	Sheet 10 of 30		

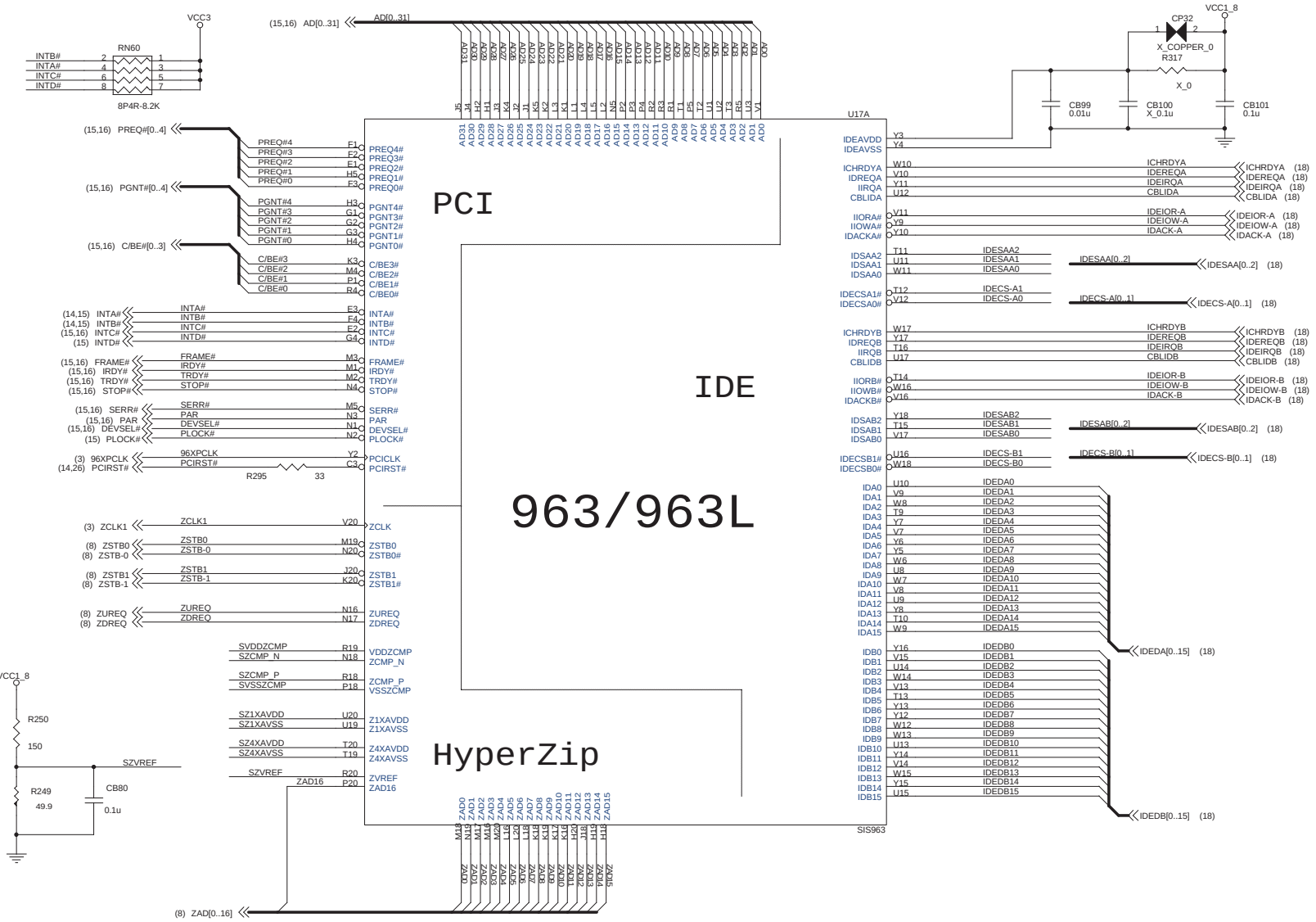

MICRO-STAR INT'L CO.,LTD.

Title	SIS961A-1		
Size	Document Number MS-6700		Rev 100
Date: Wednesday, November 06, 2002		Sheet 11 of 30	

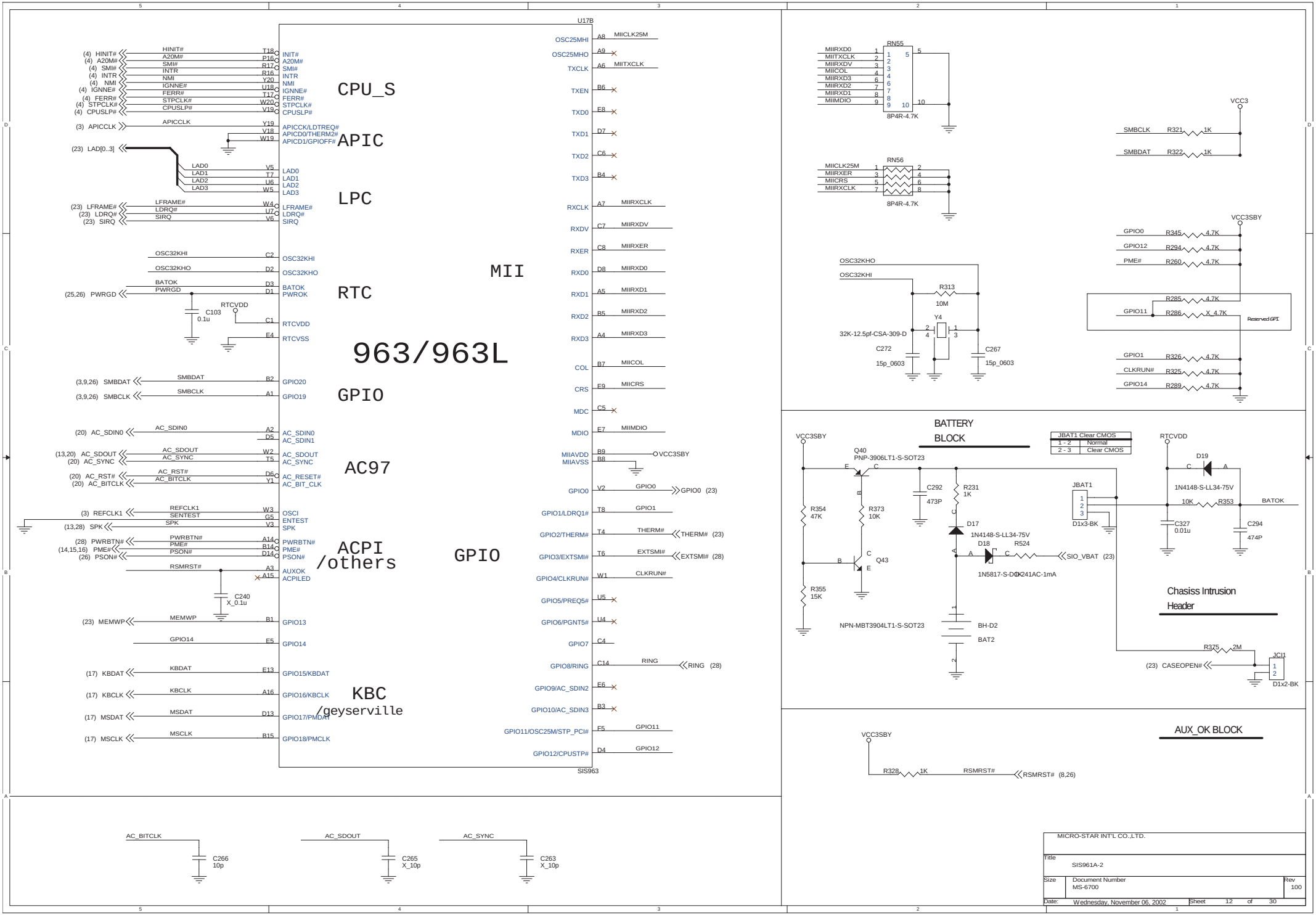
U17B
CPU_S
APIC
LPC
RTC
963/963L
GPIO
AC97
ACPI
/others
KBC
/geyserville
MII
GPIO
SIS963
HINIT#
A20M#
SMI#
INTR
NMI
IGNNE#
FERR#
STPCLK#
CPUSLP#
APICCLK
APICCK/LDTREQ#
APICD0/THERM2#
APICD1/GPIOFF#
LAD[0..3]
LAD0
LAD1
LAD2
LAD3
LFRAME#
LDRQ#
SIRQ
OSC32KHI
OSC32KHO
BATOK
PWRGD
PWROK
RTCVDD
RTCVSS
SMBDAT
SMBCLK
GPIO20
GPIO19
AC_SDIN0
AC_SDIN1
AC_SDOUT
AC_SYNC
AC_RST#
AC_BITCLK
AC_RESET#
AC_BIT_CLK
REFCLK1
SENTEST
OSCI
ENTEST
SPK
PWRBTN#
PME#
PSON#
AUXOK
ACPILED
MEMWP
GPIO13
GPIO14
KBDAT
KBCLK
MSDAT
MSCLK
GPIO15/KBDAT
GPIO16/KBCLK
GPIO17/PMDAT
GPIO18/PMCLK
OSC25MHI
OSC25MHO
TXCLK
TXEN
TXD0
TXD1
TXD2
TXD3
RXCLK
RXDV
RXER
RXD0
RXD1
RXD2
RXD3
COL
CRS
MDC
MDIO
MIIAVDD
MIIAVSS
GPIO0
GPIO1/LDRQ1#
GPIO2/THERM#
GPIO3/EXTSMI#
GPIO4/CLKRUN#
GPIO5/PREQ5#
GPIO6/PGNT5#
GPIO7
GPIO8/RING
GPIO9/AC_SDIN2
GPIO10/AC_SDIN3
GPIO11/OSC25M/STP_PCI#
GPIO12/CPUSTP#
MIICLK25M
MIITXCLK
MIIRXCLK
MIIRXDV
MIIRXER
MIIRXD0
MIIRXD1
MIIRXD2
MIIRXD3
MIICOL
MIICRS
MIIMDIO
VCC3SBY
THERM#
EXTSMI#
CLKRUN#
RING
GPIO11
GPIO12
RN55
8P4R-4.7K
RN56
8P4R-4.7K
VCC3
SMBCLK R321 1K
SMBDAT R322 1K
VCC3SBY
GPIO0 R345 4.7K
GPIO12 R294 4.7K
PME# R260 4.7K
R285 4.7K
GPIO11 R286 X_4.7K
Reserved GPI
GPIO1 R326 4.7K
CLKRUN# R325 4.7K
GPIO14 R289 4.7K
R313
10M
Y4
32K-12.5pf-CSA-309-D
C272
15p_0603
C267
15p_0603
BATTERY
BLOCK
JBAT1 Clear CMOS
1 - 2 Normal
2 - 3 Clear CMOS
Q40
PNP-3906LT1-S-SOT23
R354
47K
R373
10K
C292
473P
R231
1K
D17
1N4148-S-LL34-75V
D18
R524
1N5817-S-D0
1K241AC-1mA
SIO_VBAT (23)
Q43
NPN-MBT3904LT1-S-SOT23
R355
15K
BH-D2
BAT2
JBAT1
D1X3-BK
RTCVDD
D19
1N4148-S-LL34-75V
10K
R353
BATOK
C327
0.01u
C294
474P
Chasiss Intrusion
Header
R375
2M
JCI1
D1x2-BK
(23) CASEOPEN#
AUX_OK BLOCK
VCC3SBY
R328
1K
RSMRST#
RSMRST# (8,26)
AC_BITCLK
C266
10p
AC_SDOUT
C265
X_10p
AC_SYNC
C263
X_10p
MICRO-STAR INT'L CO.,LTD.
Title
SIS961A-2
Size
Document Number
MS-6700
Rev
100
Date: Wednesday, November 06, 2002
Sheet 12 of 30

963/963L -4

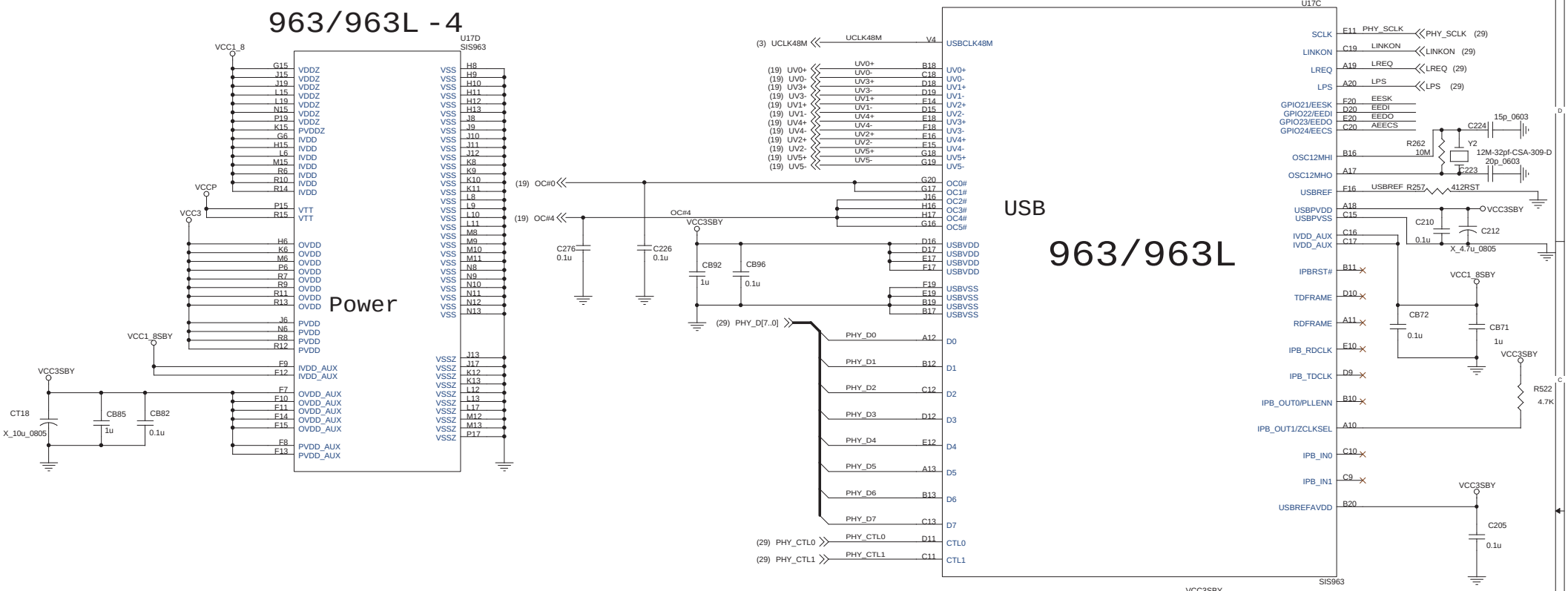

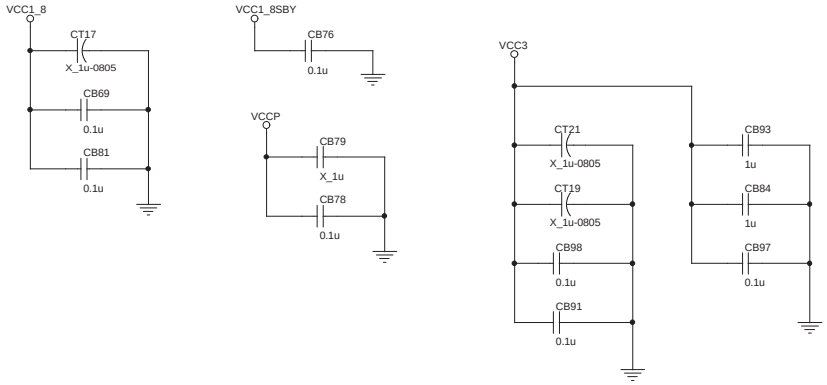

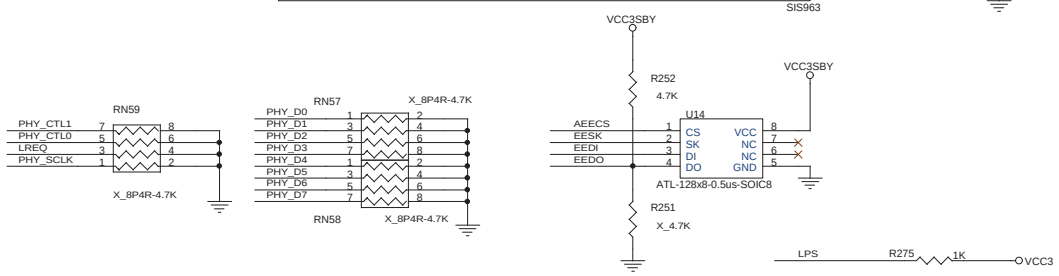

SB Hardware Trap

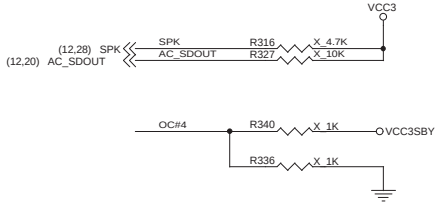

	0	1	Default	embedded pull-low (30~50K Ohm)
SPKR(LPC addr mapping)	disable	enable	0	yes
SDAT0(PCICLK PLL)	enable	disable	0	yes
OC2-(SB debug mode)	enable	disable	1	yes
OC5-(Trap mode)	PCI AD	ROM	1	yes

MICRO-STAR INT'L CO.,LTD.

Title: SIS962-3,4

Size: Document Number MS-6700 Rev 100

Date: Wednesday, November 06, 2002 Sheet 13 of 30

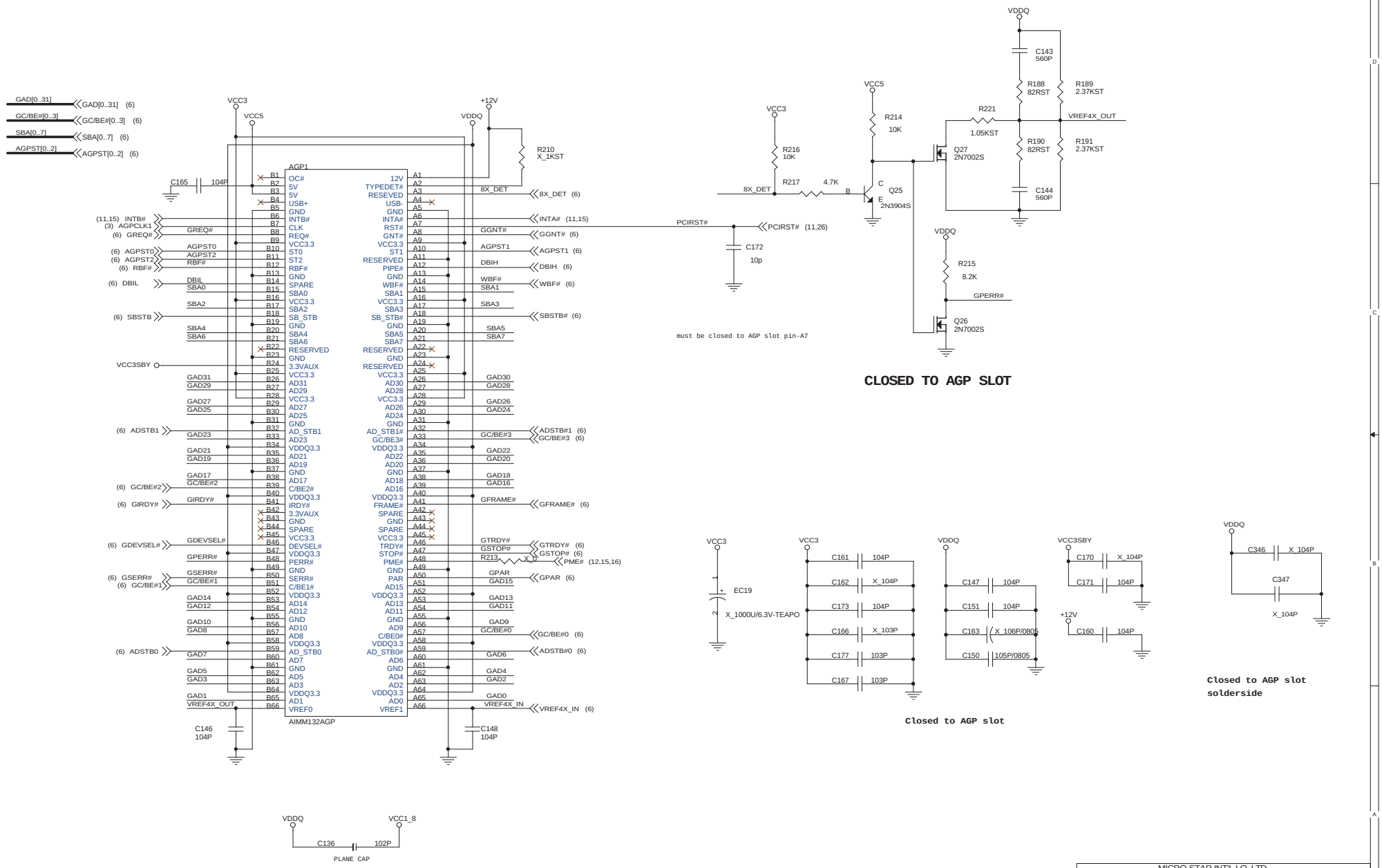

MICRO-STAR INT'L LO.,LTD.	
Title	AGP Slot & Pull up/dn resistor
Size: Custom	Document Number: MS-6701
Rev	100
Date: Wednesday, November 06, 2002	Sheet 14 of 30

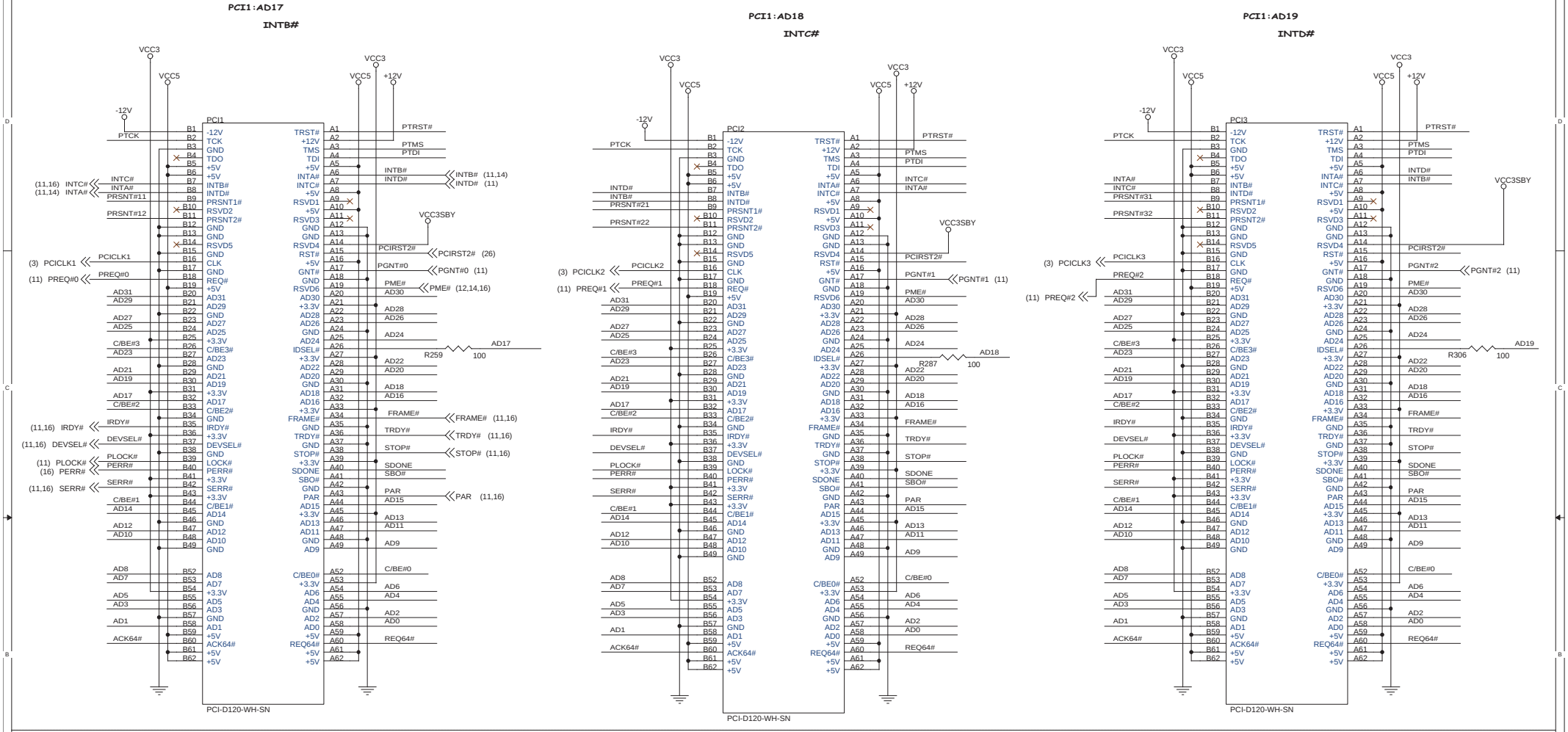

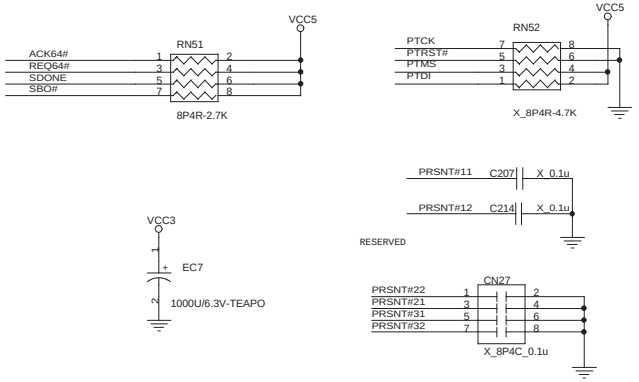

PCI BUS PULL-UP

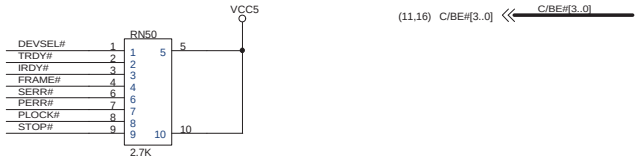

MICRO-STAR INT'L CO.,LTD.	
Title: PCI 1,2,3	
Size:	Document Number: MS-6700 — Rev: 100
Date: Wednesday, November 06, 2002	Sheet 15 of 30

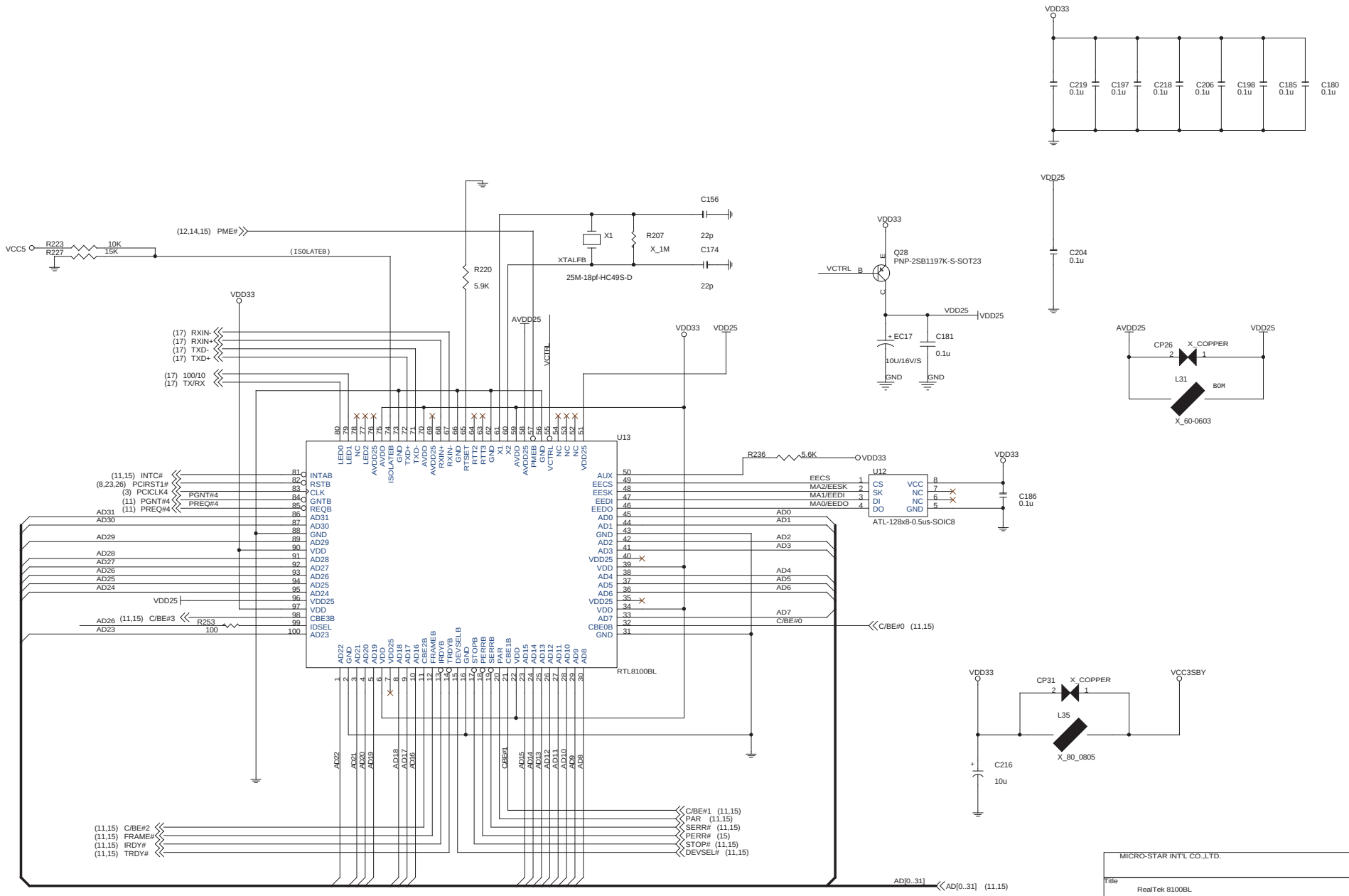

MICRO-STAR INT'L CO.,LTD.		
Title: RealTek 8100BL		
Size	Document Number: MS-6700	Rev: 100
Date: Wednesday, November 06, 2002	Sheet 16 of 30	

KEYBOARD/MOUSE PORTS

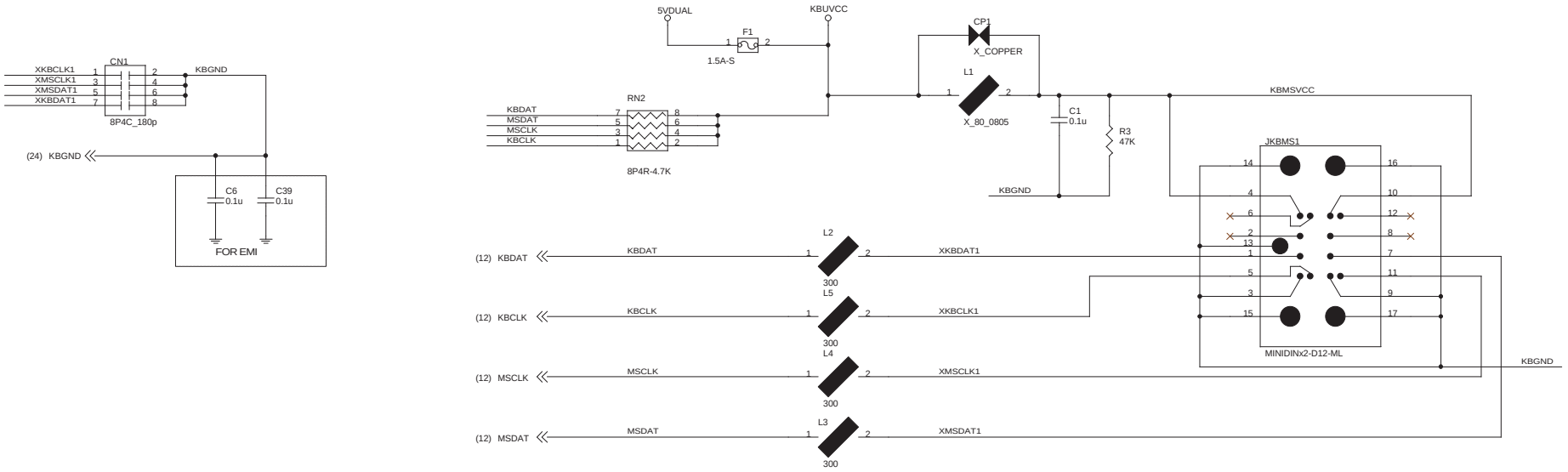

RJ45 CONNECTOR

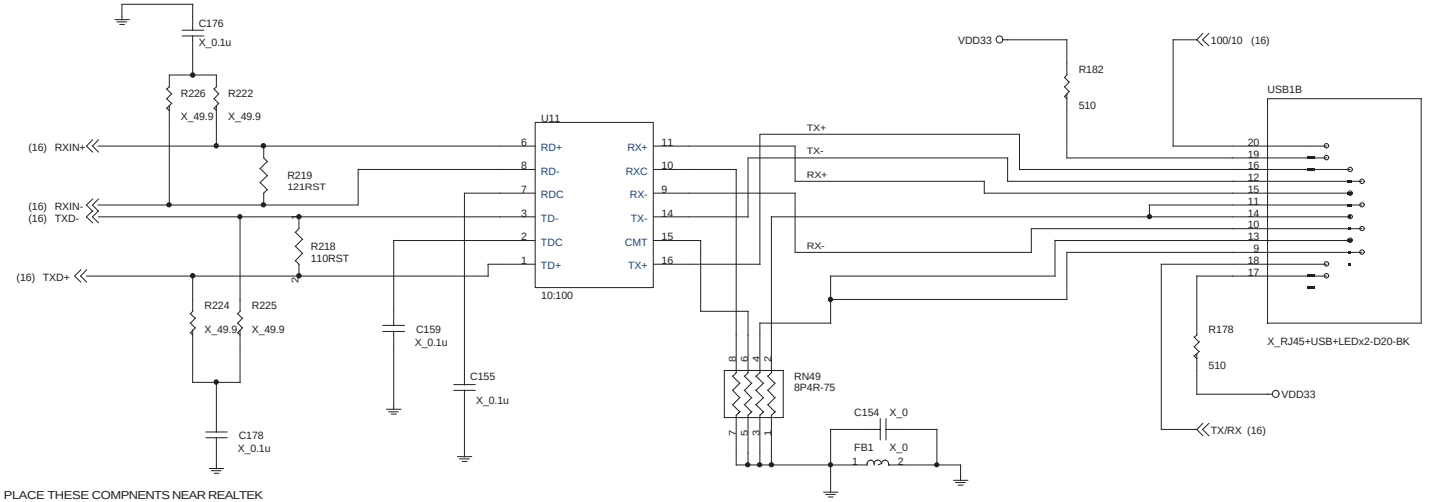

PLACE THESE COMPNENTS NEAR REALTEK
8100BL

MICRO-STAR INT'L CO.,LTD.		
Title: RJ45 & PS/2		
Size	Document Number: MS-6700	Rev: 100
Date: Wednesday, November 06, 2002	Sheet 17 of 30	

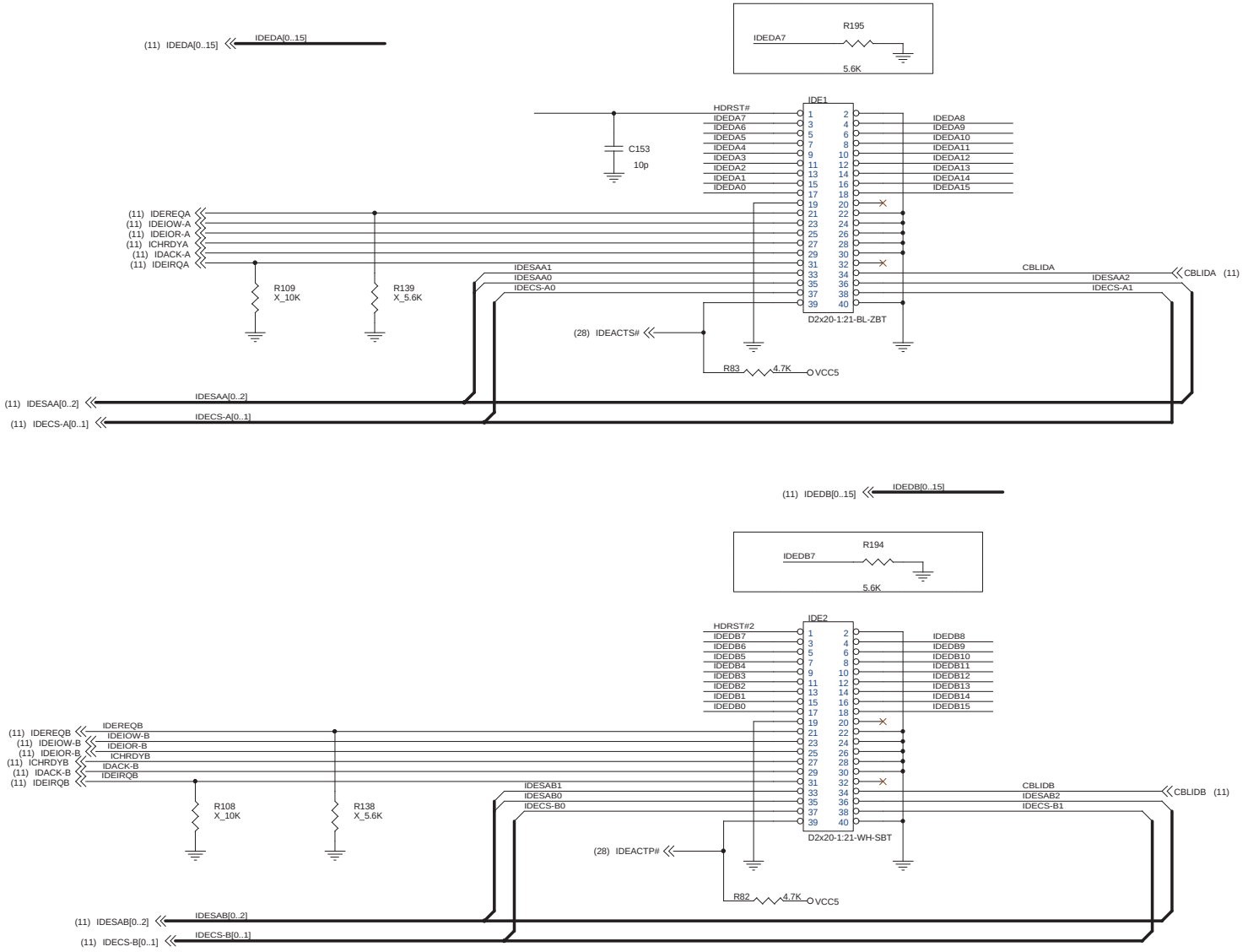

MICRO-STAR INT'L CO.,LTD.			
Title	IDE CONNECTOR		
Size	Document Number MS-6700		Rev 100
Date: Wednesday, November 06, 2002	Sheet 18 of 30		

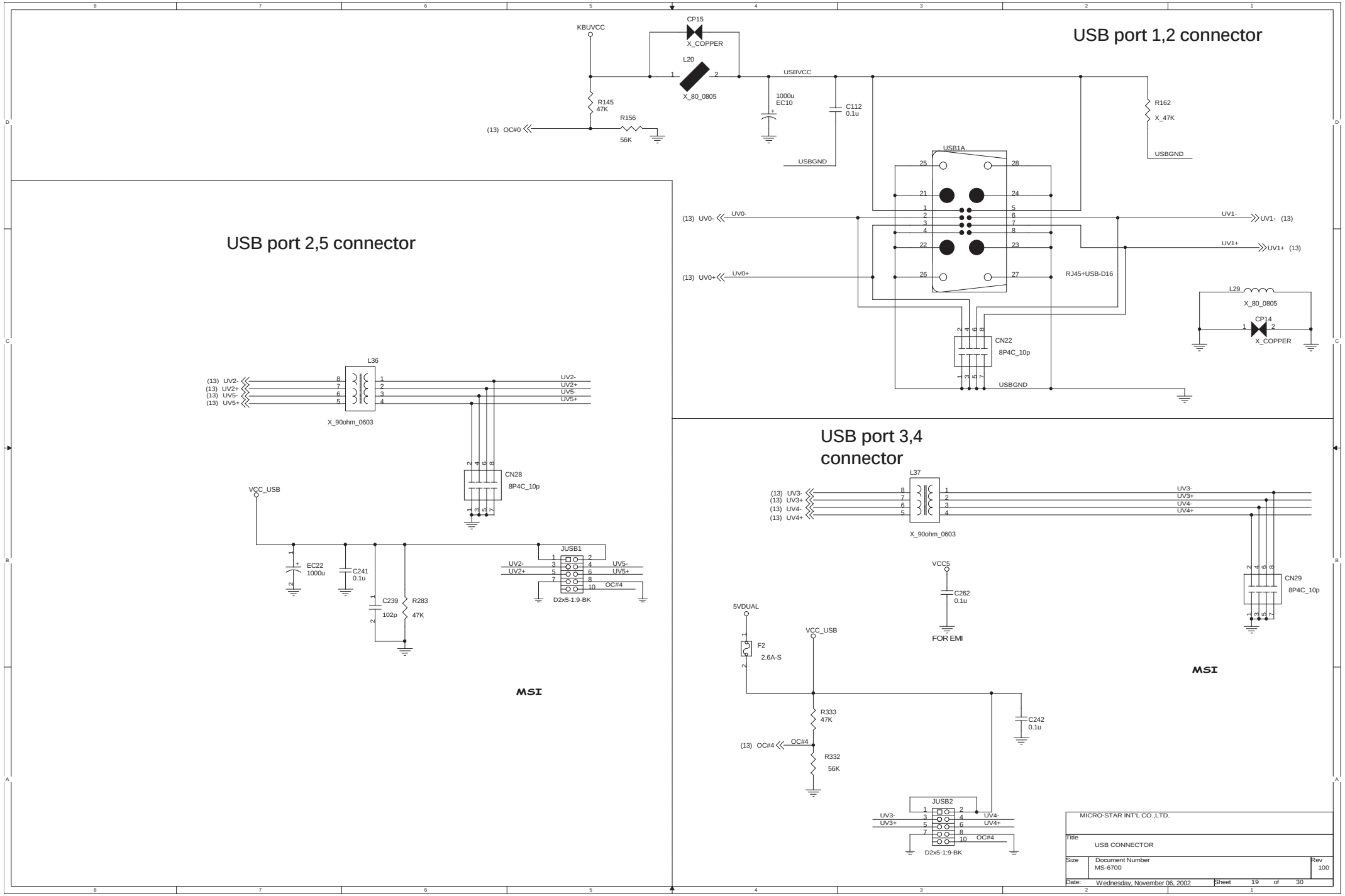
USB port 1,2 connector
KBUVCC
CP15
X_COPPER
L20
X_80_0805
USBVCC
1000u
EC10
C112
0.1u
R145
47K
R156
56K
(13) OC#0
R162
X_47K
USBGND
USB1A
(13) UV0-
UV0-
UV1-
UV1- (13)
UV1+
UV1+ (13)
(13) UV0+
UV0+
RJ45+USB-D16
L29
X_80_0805
CP14
X_COPPER
CN22
8P4C_10p
USB port 2,5 connector
L36
(13) UV2-
(13) UV2+
(13) UV5-
(13) UV5+
UV2-
UV2+
UV5-
UV5+
X_90ohm_0603
CN28
8P4C_10p
VCC_USB
EC22
1000u
C241
0.1u
C239
102p
R283
47K
JUSB1
D2x5-1:9-BK
OC#4
MSI
USB port 3,4 connector
L37
(13) UV3-
(13) UV3+
(13) UV4-
(13) UV4+
UV3-
UV3+
UV4-
UV4+
X_90ohm_0603
CN29
8P4C_10p
VCC5
C262
0.1u
FOR EMI
5VDUAL
F2
2.6A-S
VCC_USB
R333
47K
(13) OC#4
OC#4
R332
56K
C242
0.1u
JUSB2
D2x5-1:9-BK
MSI
MICRO-STAR INT'L CO.,LTD.
Title
USB CONNECTOR
Size
Document Number
MS-6700
Rev
100
Date:
Wednesday, November 06, 2002
Sheet
19
of
30

ALC650/202A AC97 CODEC

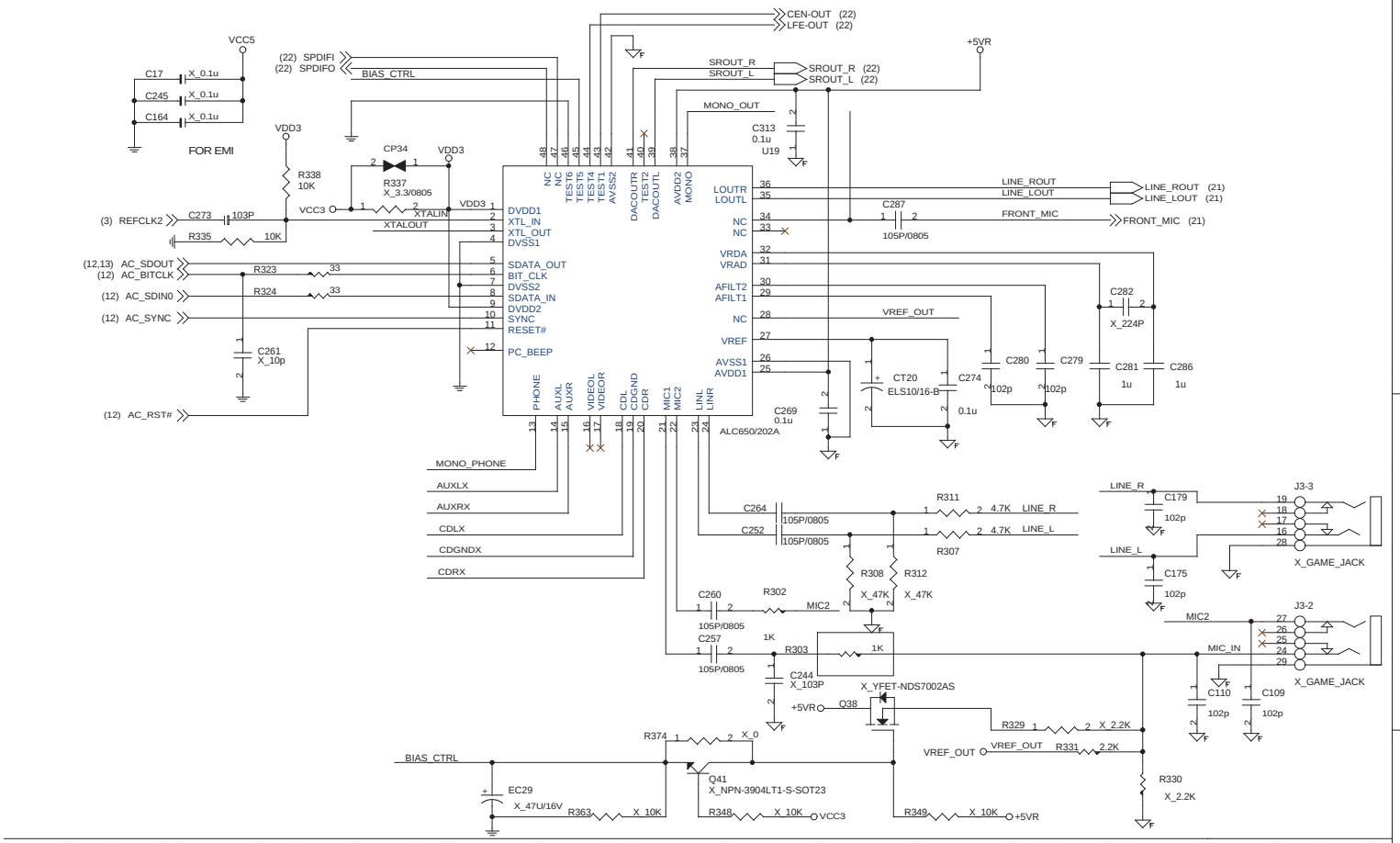

CD PANEL PLAY WITHOUT PC POWER_ON

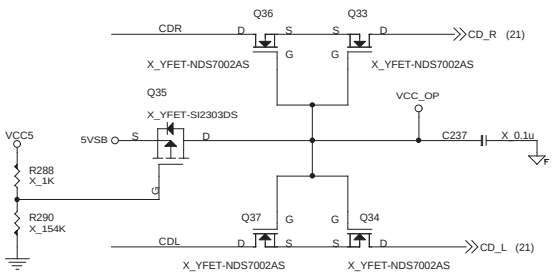

DECOUPLING CAPACITOR

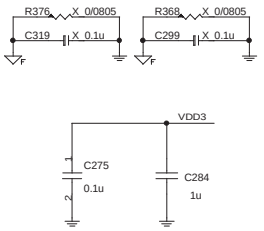

AUDIO CODE REGULATORS

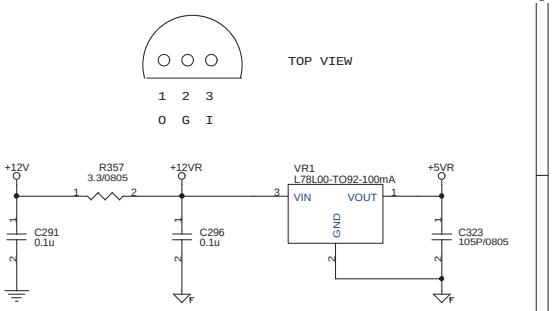

AUDIO CODE CD / AUX / MODEM IN HEADERS

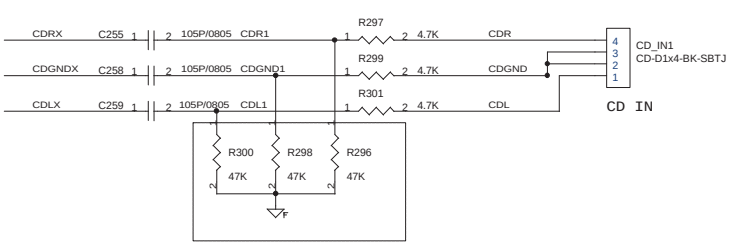

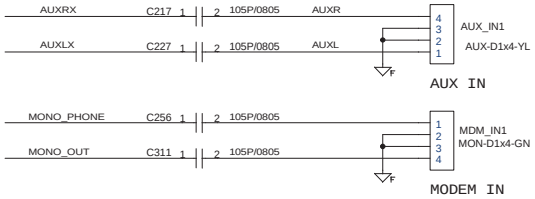

MICRO-STAR INT'L CO.,LTD.		
Title: AC'97 CODEC		
Size	Document Number: MS-6700	Rev: 100
Date: Wednesday, November 06, 2002	Sheet 20 of 30	

SPEAKER OUT CIRCUIT

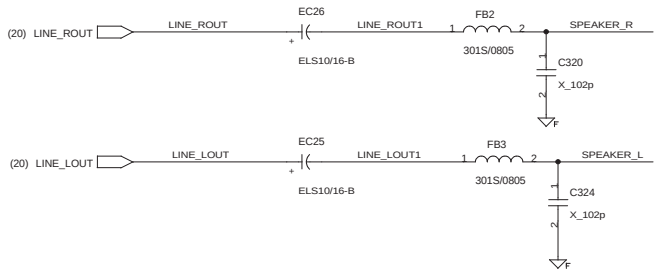

SPEAKER OUT JACK

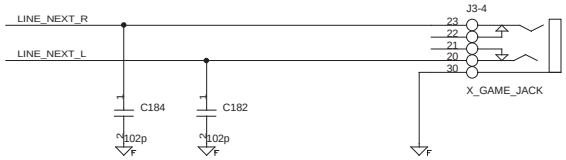

CD PANEL PLAY WITHOUT PC POWER_ON

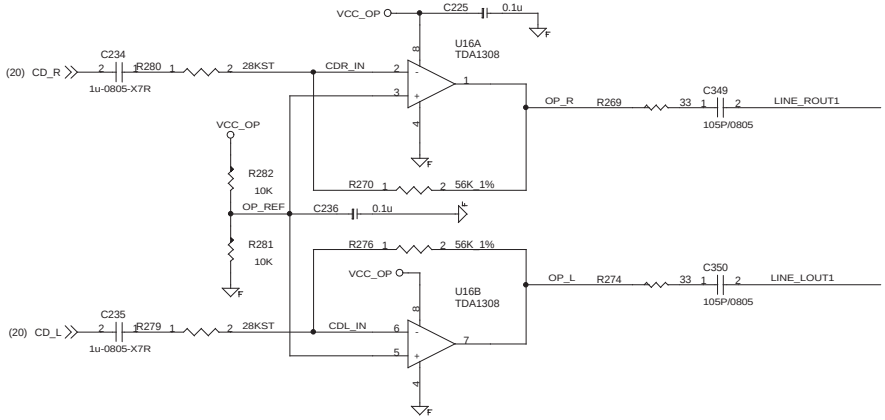

FOR MSI INTERNAL HEADER

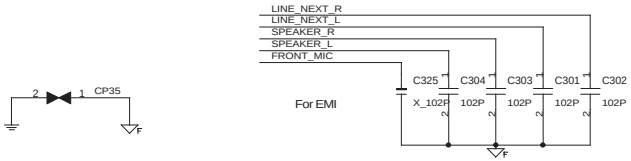

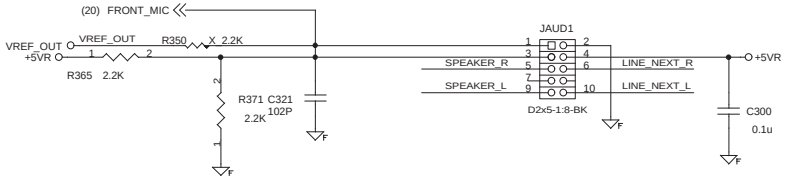

GAME/MIDI CONNECTOR

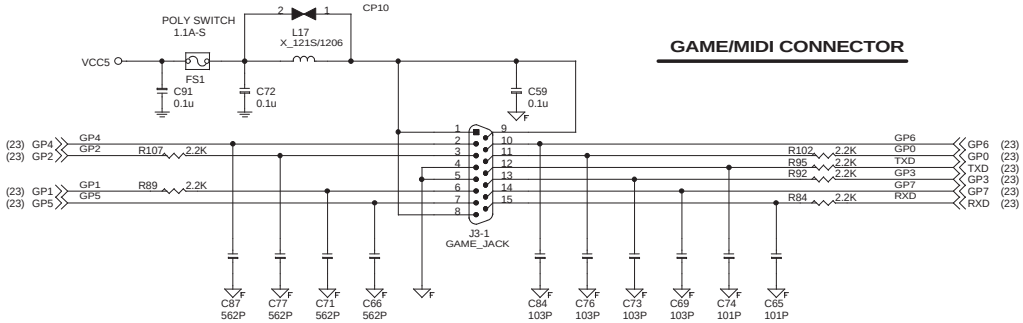

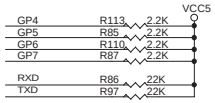

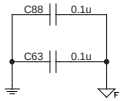

MICRO-STAR INT'L CO.,LTD.			
Title: AUDIO CONNECTOR			
Size	Document Number: MS-6700		Rev: 100
Date: Wednesday, November 06, 2002	Sheet 21 of 30		

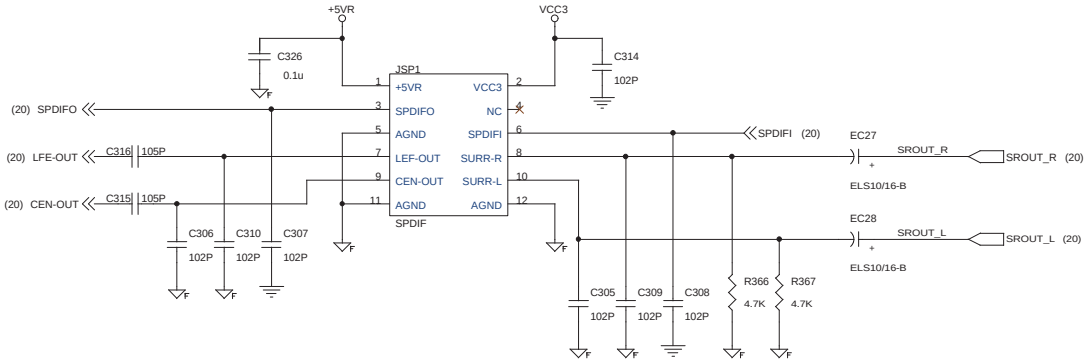

CPU FAN

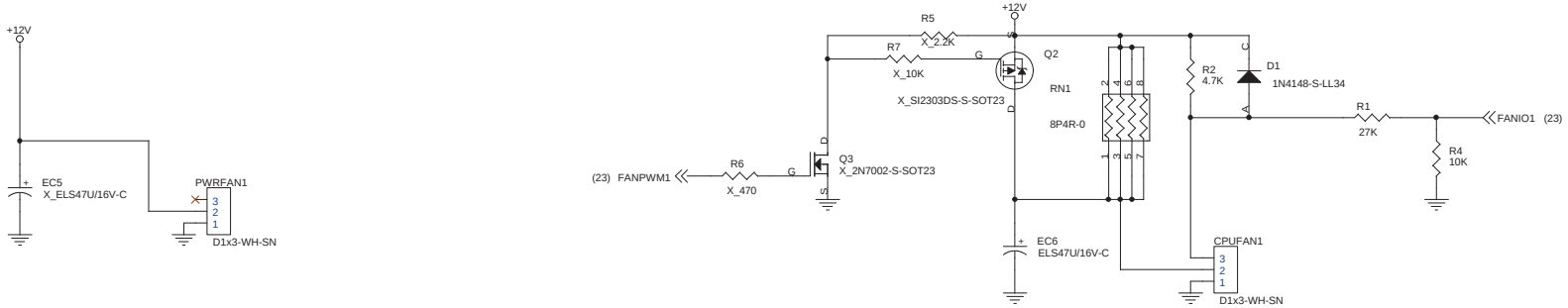

SYSTEM FAN

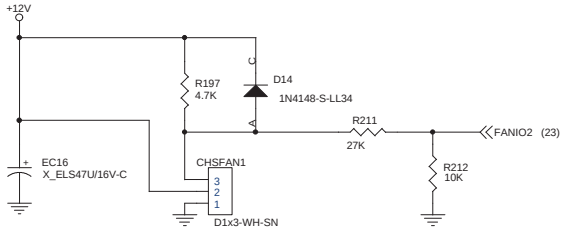

MICRO-STAR INT'L CO.,LTD.			
Title: 6 CHANNEL & FAN			
Size	Document Number: MS-6700		Rev: 100
Date: Wednesday, November 06, 2002	Sheet 22 of 30		

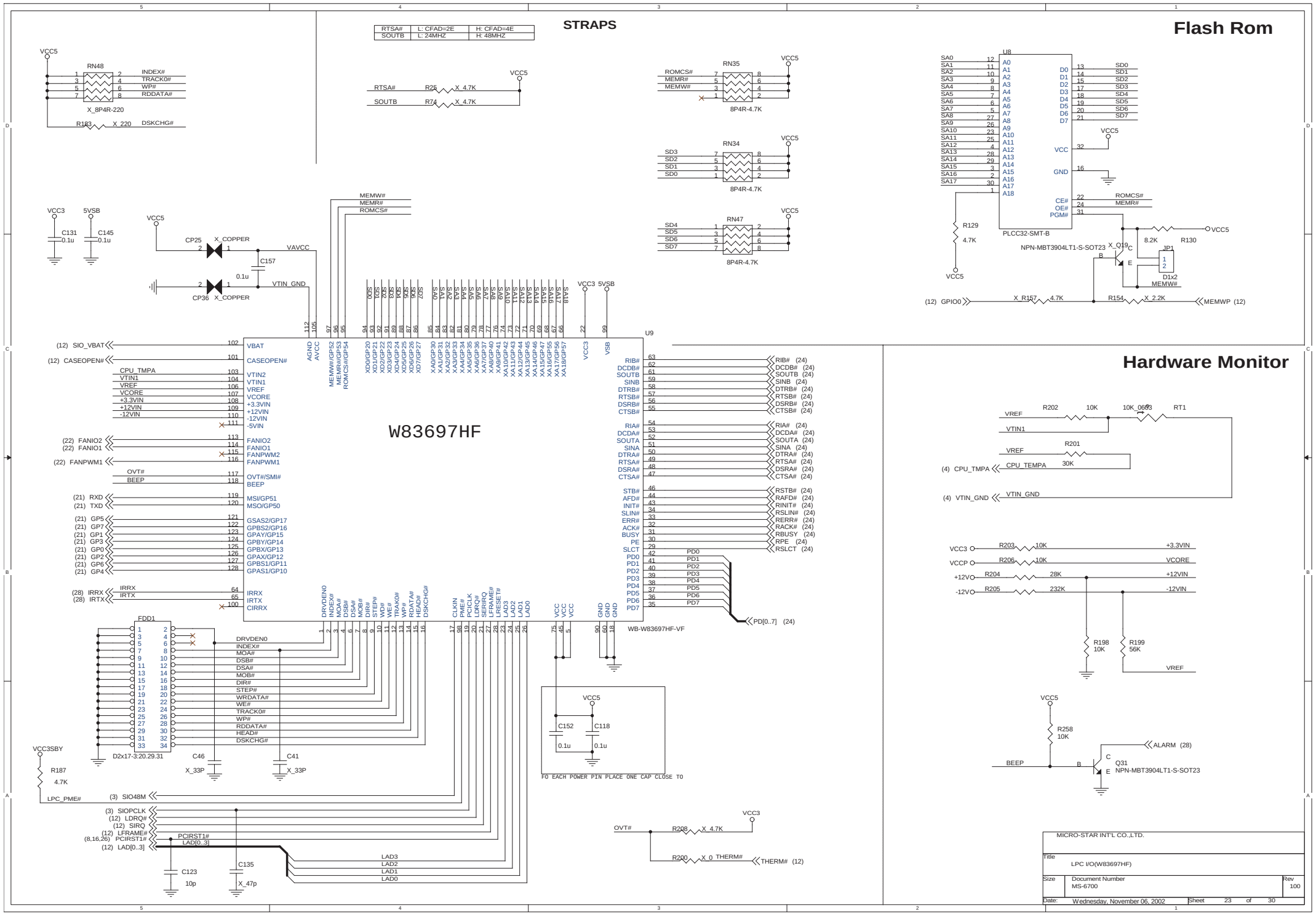
STRAPS
RTSA# | L: CFAD=2E | H: CFAD=4E
SOUTB | L: 24MHZ | H: 48MHZ
Flash Rom
Hardware Monitor
W83697HF
WB-W83697HF-VF
PLCC32-SMT-B
NPN-MBT3904LT1-S-SOT23
D2x17-3:20.29.31
FO EACH POWER PIN PLACE ONE CAP CLOSE TO
MICRO-STAR INT'L CO.,LTD.
Title
LPC I/O(W83697HF)
Size
Document Number
MS-6700
Rev
100
Date: Wednesday, November 06, 2002
Sheet 23 of 30

Parallel Port

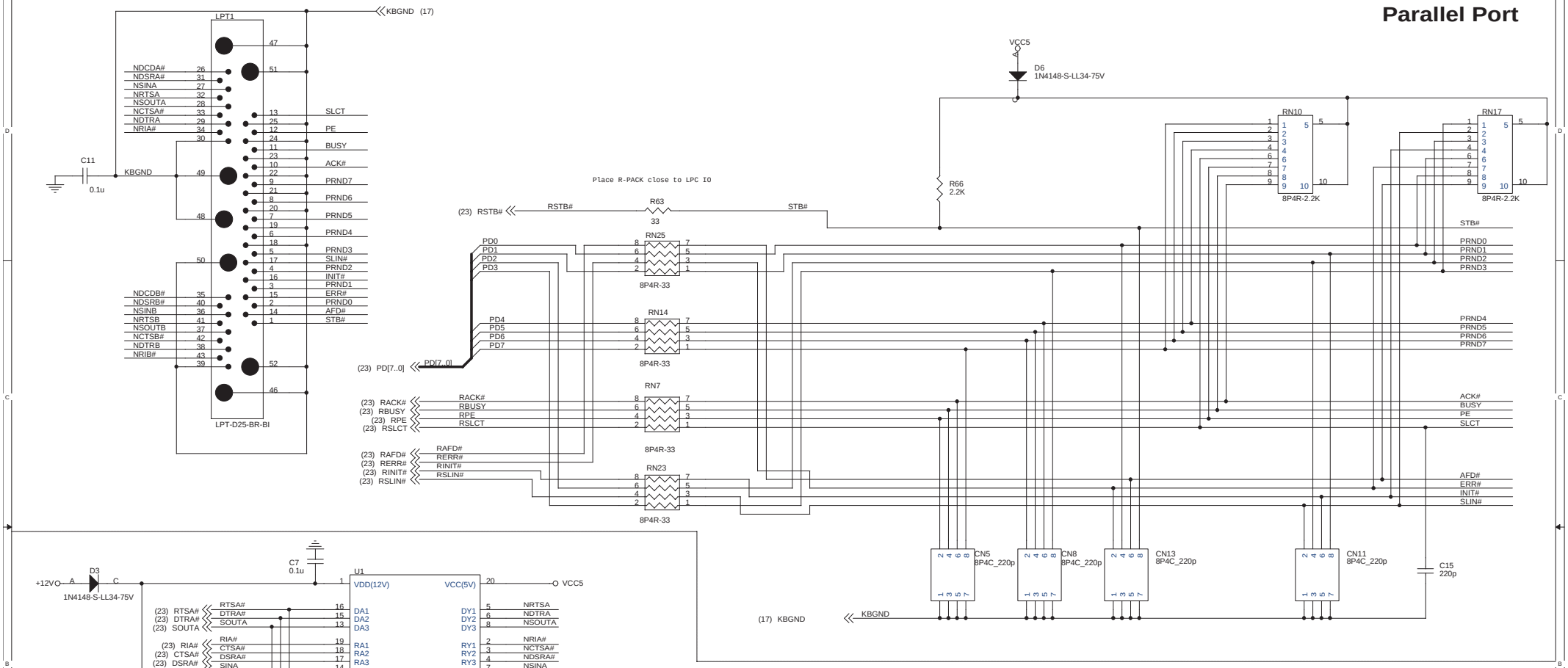

Serial Port

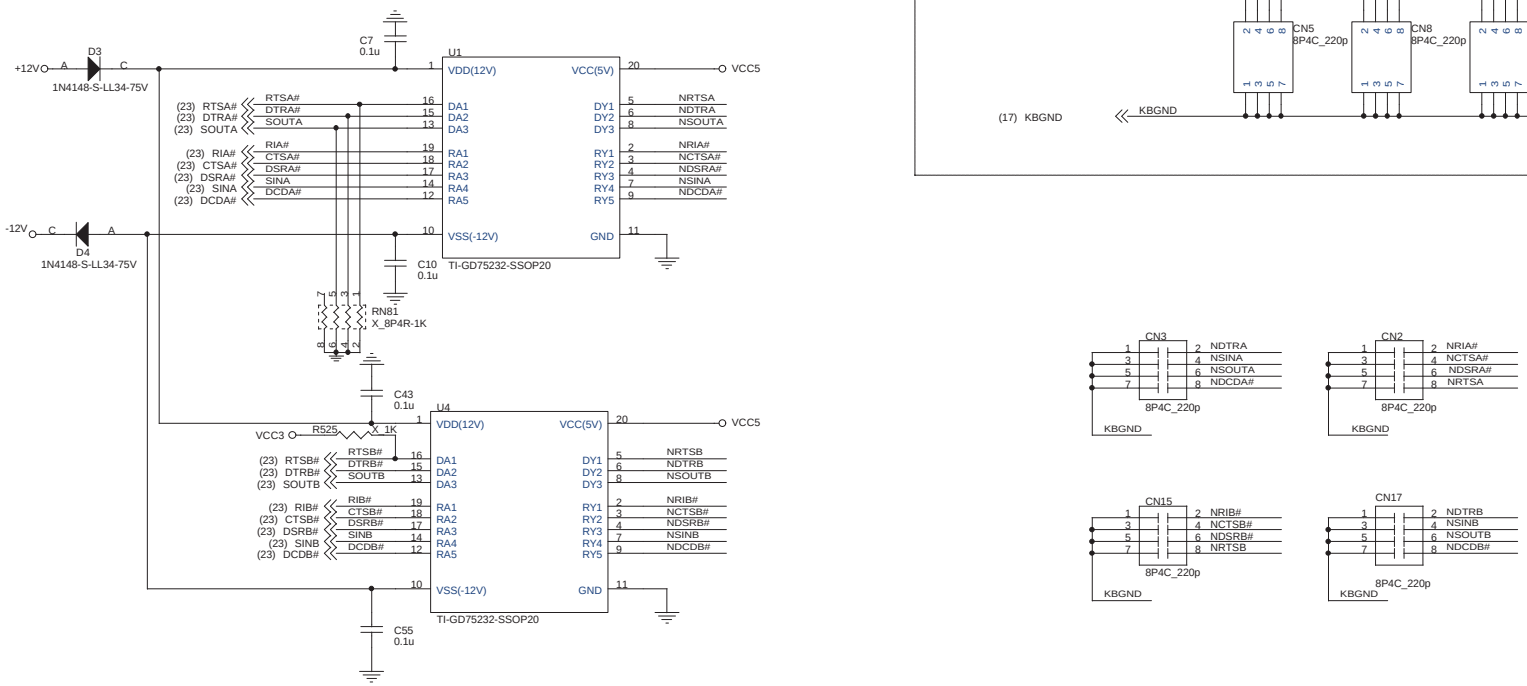

MICRO-STAR INT'L CO.,LTD.			
Title	Parallel/Serial Port		
Size	Document Number MS-6700		Rev 100
Date: Wednesday, November 06, 2002	Sheet 24 of 30		

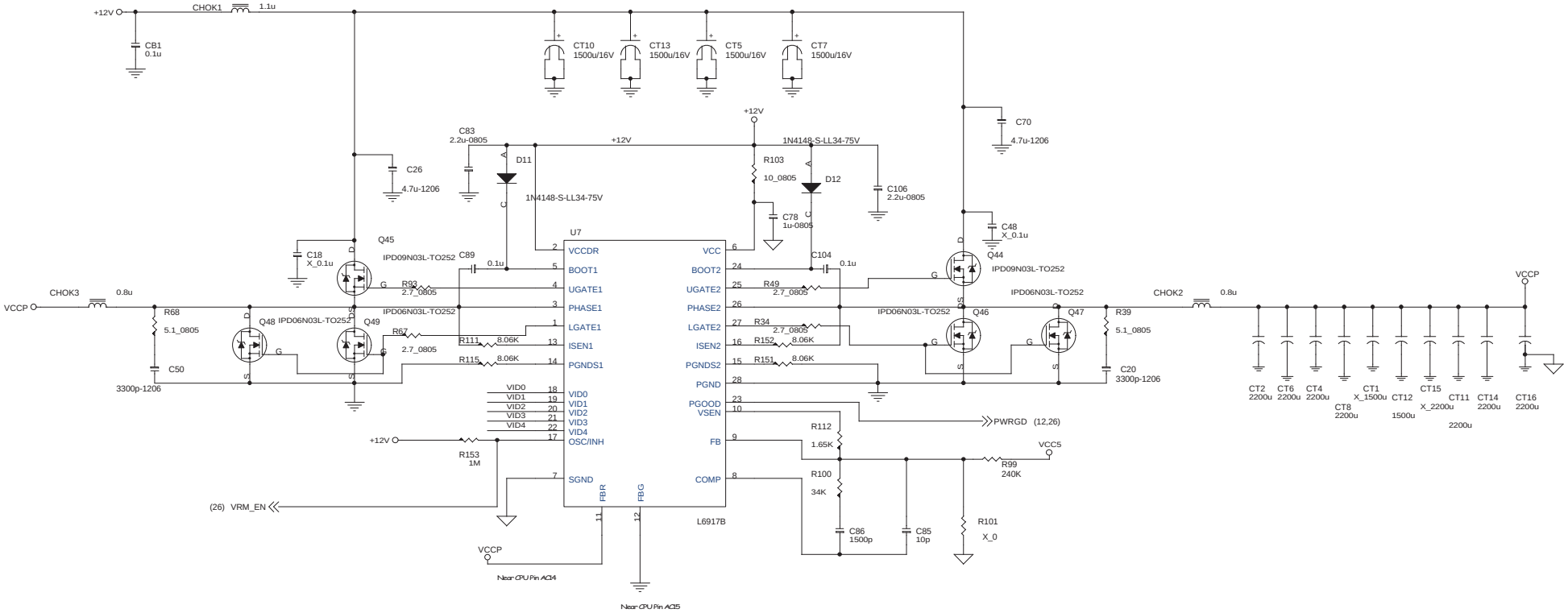

VID PULL-UP RESISTORS

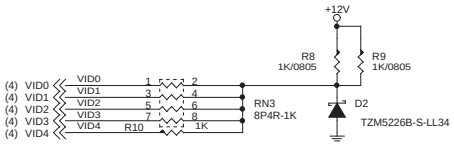

ATX12V POWER CONNECTOR

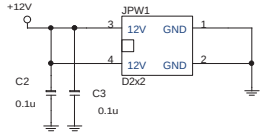

MICRO-STAR INT'L CO.,LTD.		
Title: VRM 9.0		
Size	Document Number: MS-6700	Rev: 100
Date: Wednesday, November 06, 2002	Sheet 25 of 30	

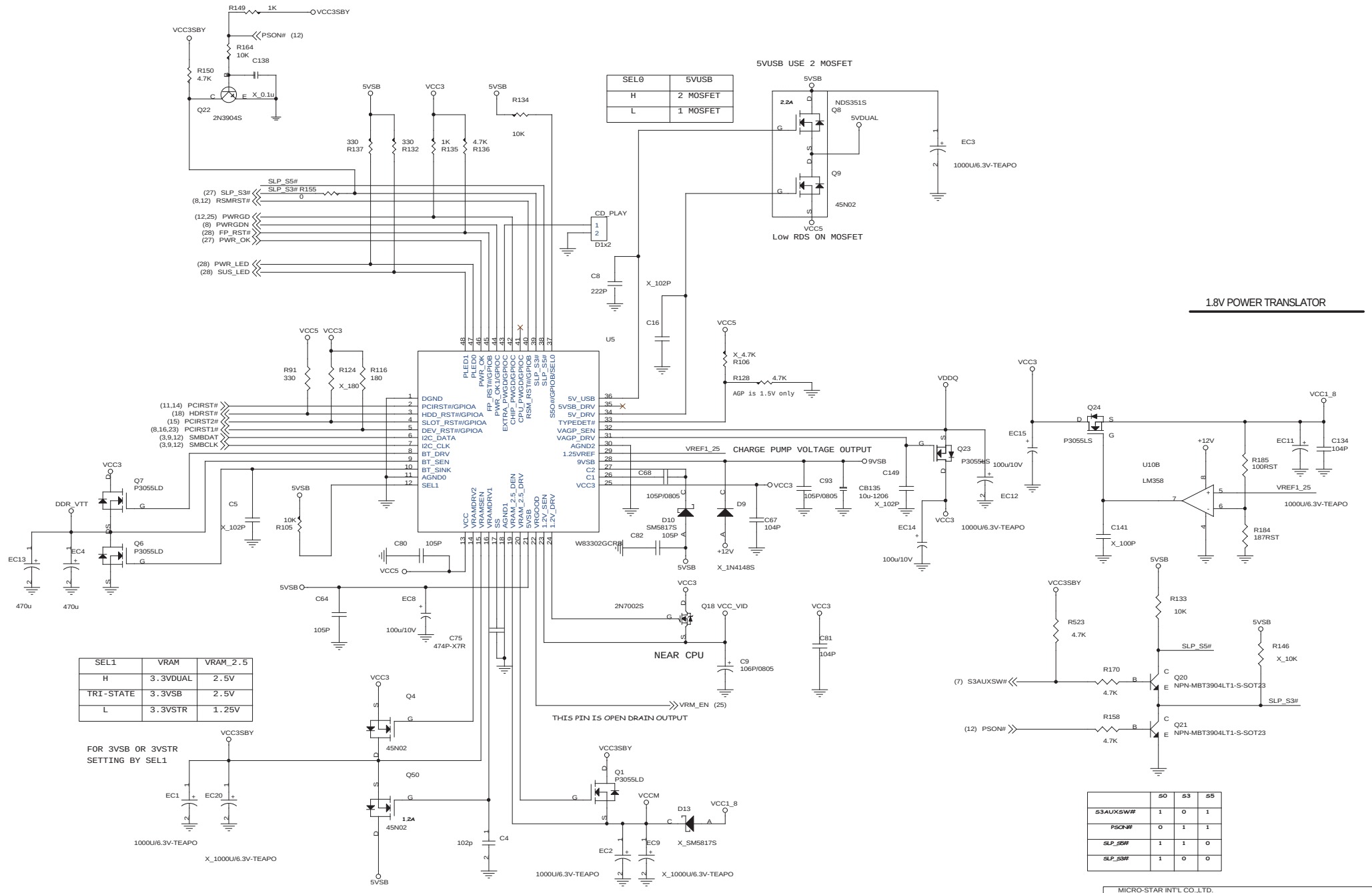
5VUSB USE 2 MOSFET
SEL0 | 5VUSB
H | 2 MOSFET
L | 1 MOSFET
Low RDS ON MOSFET
1.8V POWER TRANSLATOR
CHARGE PUMP VOLTAGE OUTPUT
NEAR CPU
THIS PIN IS OPEN DRAIN OUTPUT
AGP is 1.5V only
SEL1 | VRAM | VRAM_2.5
H | 3.3VDUAL | 2.5V
TRI-STATE | 3.3VSB | 2.5V
L | 3.3VSTR | 1.25V
FOR 3VSB OR 3VSTR
SETTING BY SEL1
FOR 3VDUAL ** SETTING 3VSTR THEN VRAM_2.5
SETTING BY BECOME TO 1.25 VREF
SEL1
S0 S3 S5
S3AUXSW# 1 0 1
PSON# 0 1 1
SLP_S5# 1 1 0
SLP_S3# 1 0 0
MICRO-STAR INT'L CO.,LTD.
Title DECOUPLING CAPACITOR
Size Document Number MS-6700 Rev 100
Date: Wednesday, November 06, 2002 Sheet 26 of 30

ATX CONNECTOR

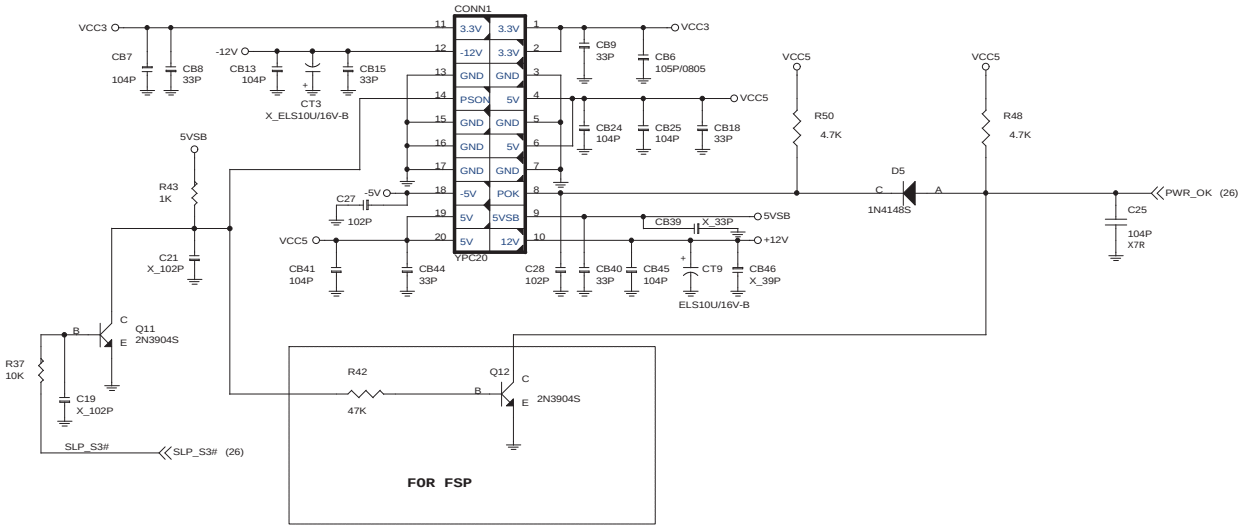

MICRO-STAR INT'L CO.,LTD.			
Title: ATX Power Conn.			
Size	Document Number MS-6700		Rev 100
Date: Wednesday, November 06, 2002	Sheet 27 of 30		

INTEL FRONT PANEL-M

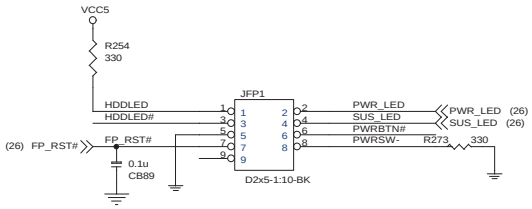

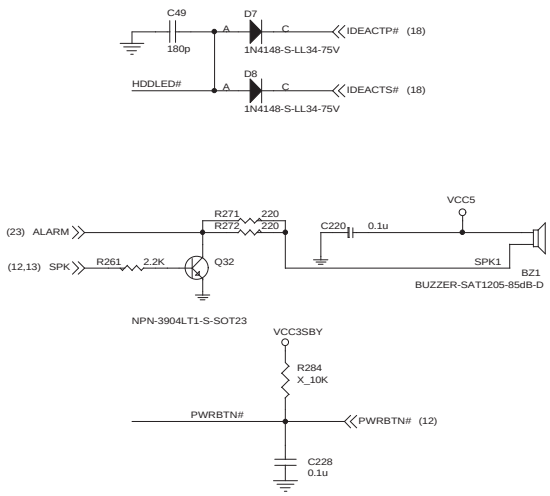

IR HEADER

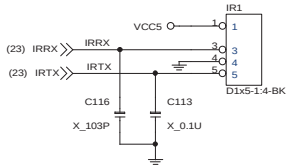

Wake by Modem

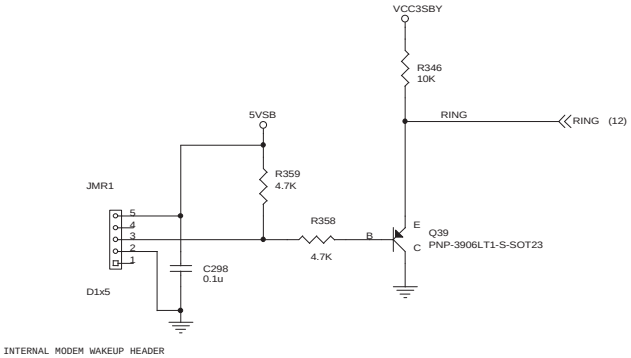

Wake by LAN

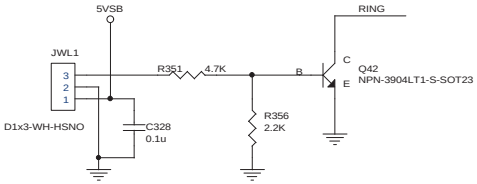

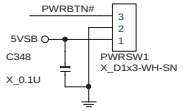

Sleep Button

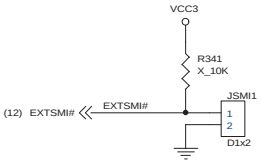

MICRO-STAR INT'L CO.,LTD.			
Title: FRONT PANEL			
Size	Document Number: MS-6700		Rev: 100
Date: Wednesday, November 06, 2002	Sheet 28 of 30		

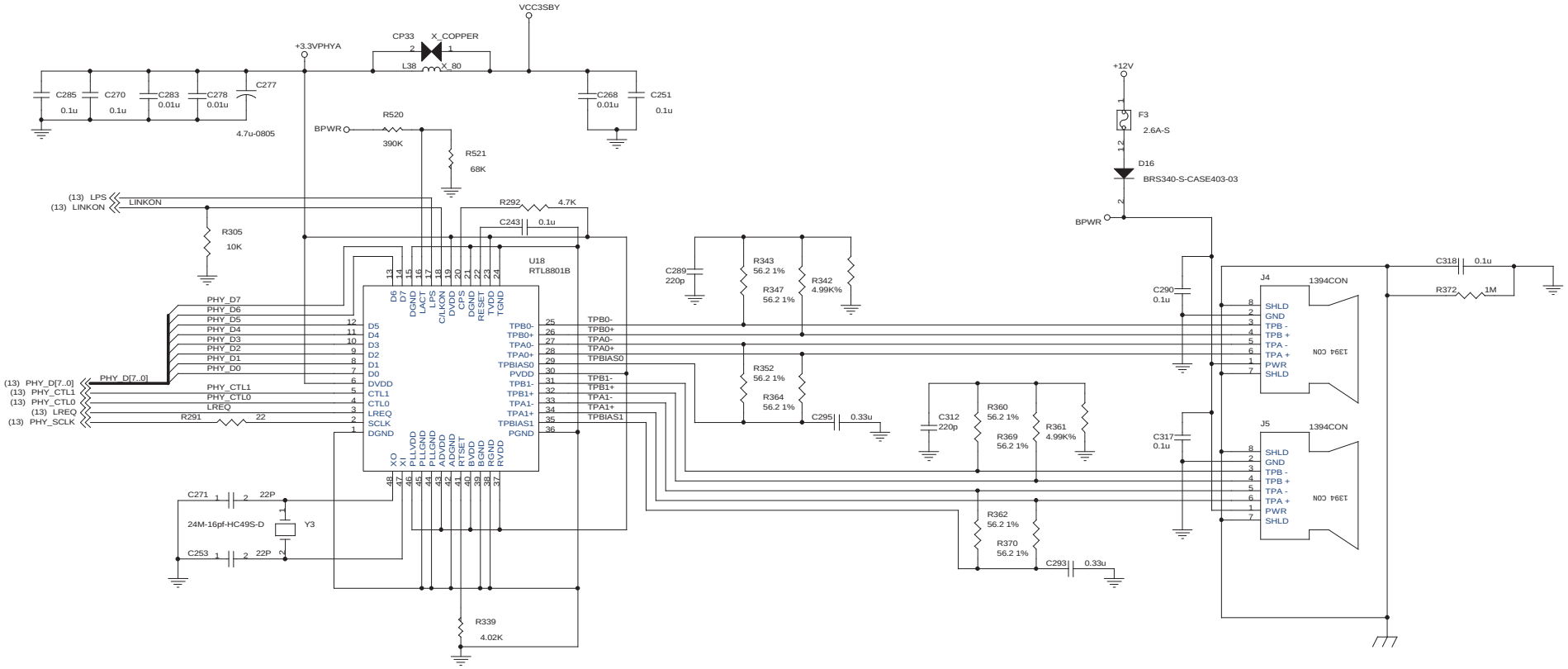

MICRO-STAR INT'L CO.,LTD.			
Title: IEEE 1394			
Size	Document Number: MS-6700		Rev: 100
Date: Wednesday, November 06, 2002	Sheet 29 of 30		

JBAT1 Clear CMOS		
1 - 2	Normal	*
2 - 3	Clear CMOS	

JBAT1(1-2)
YJUMPER-MG

BAT SOCKET

BAT1

U8_A
PLCC32-SMT-B

INTEL AUDIO

JAUD1(AF)
YJUMPER-MG

JAUD1(AG)
YJUMPER-MG

BIOS WRITE PROTECT

JP1(1-2)
YJUMPER-MG

U17_H
HEATSINK

U6_H
HEATSINK

MS6700 PCB

PCB
MS-6700-100

COM1
YCN9M-1

COM2
YCN9M-1

USB
USBA

Q44_46_47
MOSHS

Q45_48_49
MOSHS

System Decoupling Capacitors

+12V: EC18 X_10u, C247 0.1u, C288 0.1u

VCC5: EC21 X_10u, C12 0.1u, C238 0.1u, C199 0.1u, C213 0.1u, C221 0.1u, C248 0.1u, C250 0.1u

-12V: EC24 X_10u, C14 0.1u, C13 0.1u

VCC3: EC23 X_10u, C215 0.1u, C209 0.1u, C222 0.1u, C246 0.1u

VCC3SBY: C297 0.1u, C158 0.1u

VCC3: C137 0.1u, C254 0.1u, C249 0.1u

5VSB: C322 0.1u

High Freq. return current decoupling

VCC5, VCC3: C208 102P

CP11 X_COPPER_0, R193 X_0

CP24 X_COPPER_0, R196 X_0

R144 0

R192 X_0

MICRO-STAR INT'L CO.,LTD.			
Title: DECOUPLING CAPACITOR			
Size	Document Number: MS-6700		Rev: 100
Date: Wednesday, November 06, 2002	Sheet 30 of 30		