Cover Sheet	1
Block Diagram	2
AMD 462pins SocketA CPU - Signals	3
AMD 462pins SocketA CPU - Power	4
CRUSH17/18 - Host & VID Signals	5
CRUSH17/18 - Memory-A & LDT & PLL Signals	6
CRUSH17/18 - Memory-B Signals	7
CRUSH17/18 - AGP & VIDEO Signals	8
MCP2 - CPU & PCI & LDT & IDE Signals	9
MCP2 - MAC & USB & LPC & AC'97 Signals	10
LPC I/O - W83627HF	11
AC97 Audio - ALC202A	12
MII LAN & LPC Flash EEPROM	13
DDR System Memory	14
AGP 3.0 Slot, LDT Regulator & COM2	15
PCI Slots	16
ATA33/66/100 IDE & Video Connectors	17
FAN & USB Connectors	18
I1394 PHY & Connectors	19
ATX & Front Panel	20
ACPI (MS5) Controller	21
VRM 9.0 - ST6917B	22
GPIO	23
Power Delivery Map & MANUAL	24
Revision History 1	25

(MS-6595) *Version: 0B*

Nvidia (R) Crush17/18(nForce IGP 64) + MCP2/2H Chipset
AMD Althon/Duron/Morgan/Palomino Socket 462 Processor

CPU:

AMD Duron/Morgan 1.2G&1.3G
AMD Althon/Palomino 1500 - 1.333G/266MHz
AMD Althon/Palomino 1600 - 1.400G/266MHz
AMD Althon/Palomino 1700 - 1.467G/266MHz
AMD Althon/Palomino 1800 - 1.533G/266MHz
AMD Althon/Palomino 1900 - 1.600G/266MHz
AMD Althon/Palomino 2000 - TBD

System Chipset:

Nvidia nForce IGP 64 (North Bridge)
MCP2/2H Wep (South Bridge)

On Board Chipset:

BIOS -- LPC EEPROM
AC'97 Codec -- ALC202A
LPC Super I/O -- W83627HF-AW
LAN -- ICS1893 PHY
I1394 -- FW803 PHY

Expansion Slots:

AGP 3.0 SLOT * 1
PCI2.2 SLOT * 3

PWM Controller:

ST6917B

ACPI:

MS5

MSI	MICRO-STAR INt'L CO., LTD.	
Title	COVER SHEET	
Size	Document Number (MS-6595)	Rev 0A
Date: Monday, July 08, 2002	Sheet 1 of 25	

Block Diagram

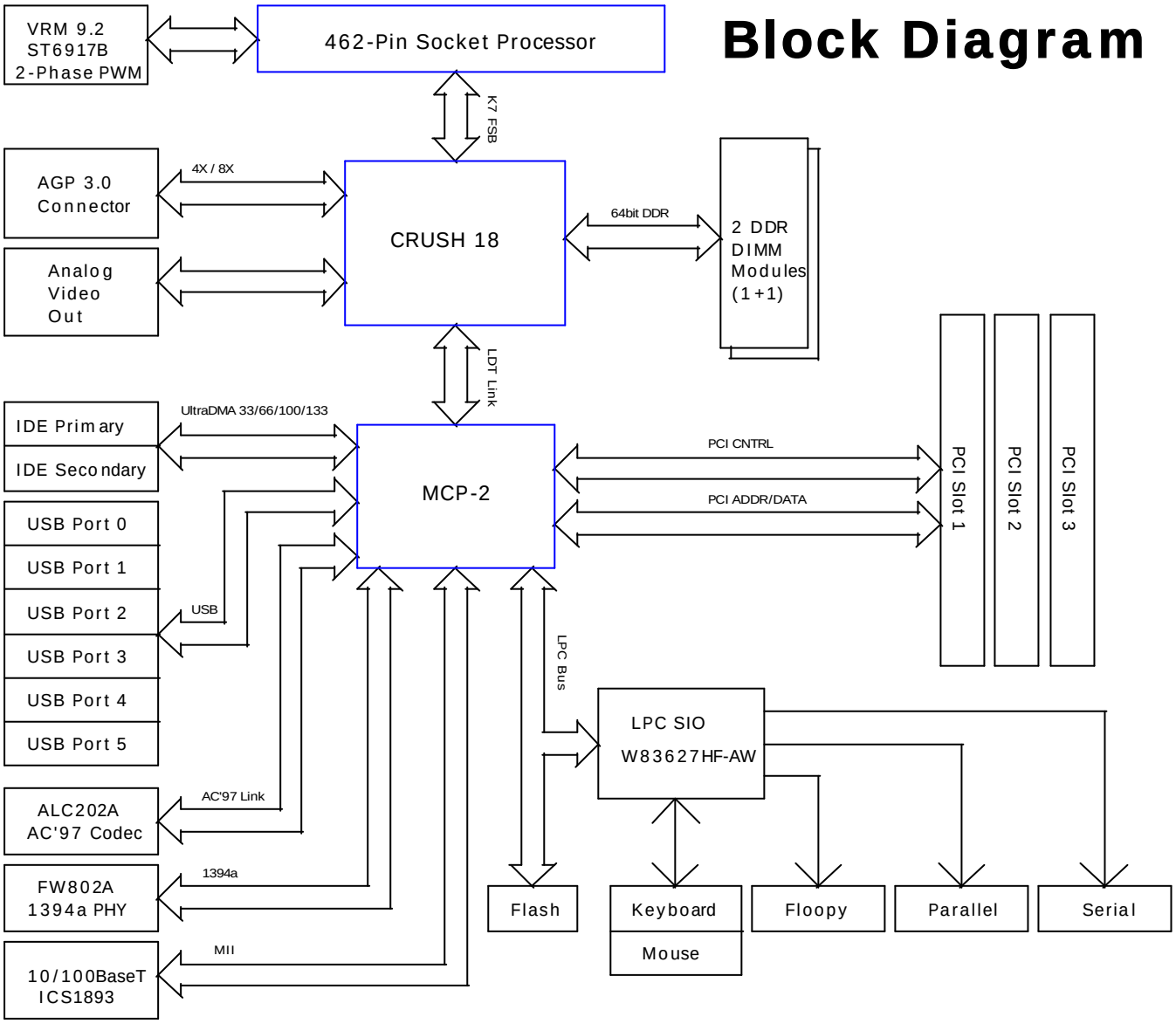

MSI	MICRO-STAR INt'L CO., LTD. H/W Project Leader : Joey Lee H/W Project Engineer : Richard Shih	
Title	BLOCK DIAGRAM	
Size	Document Number (MS-6595)	Rev 0A
Date: Monday, July 08, 2002	Sheet 2 of 25	

CPU SIGNAL BLOCK

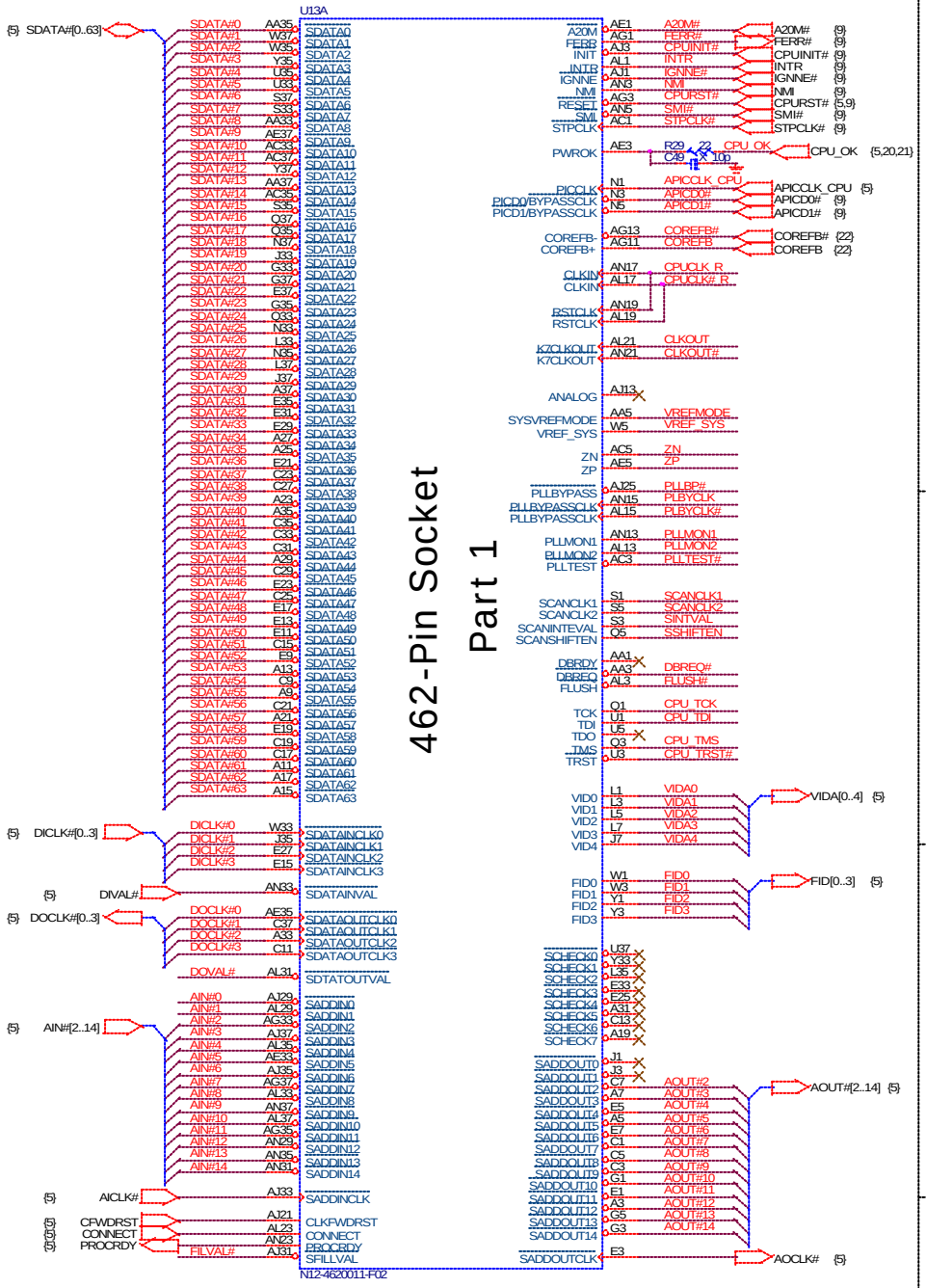

All CPU interface are 2.5V tolerant

CPU PULL-UP / DOWN BLOCK

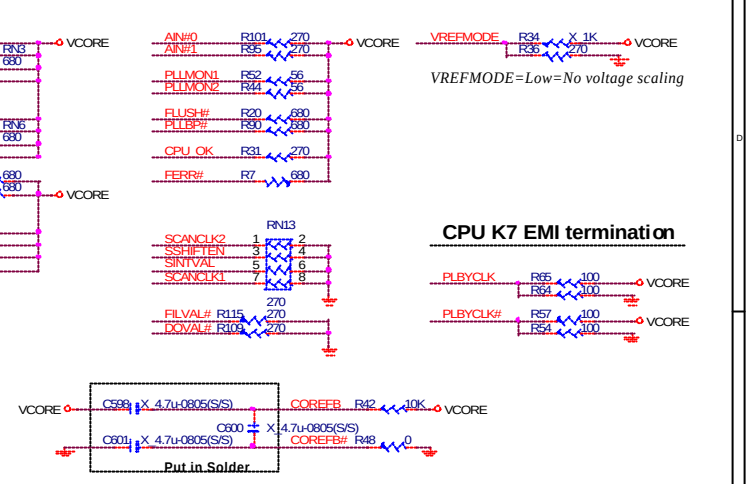

CPU SYSCLK BLOCK

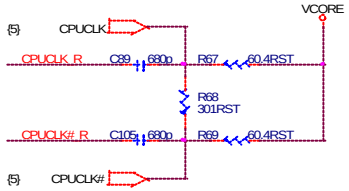

CLOSE SOCKET462

CPU Clock Multiplier

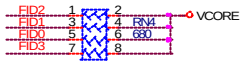

CFID[3:0] => CPU Clock Multiplier

CPU K7CLKOUT BLOCK

** Trace lengths of CLKOUT and CLKOUT# are between 2" and 3"*

CPU SYSCLK REFERNCE BLOCK

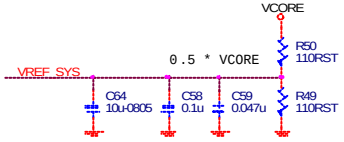

CLOSE SOCKET462

CPU ZN / ZP BLOCK

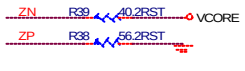

CLOSE SOCKET462

match the transmission line

Push-pull compensation circuit

CPU APIC BLOCK

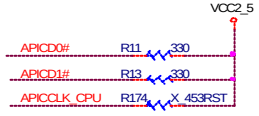

MICRO-STAR INt'L CO., LTD.	
Title	AMD Socket462 CPU (Signal)
Size	Document Number (MS-6597) Rev 0A
Date: Monday, July 08, 2002	Sheet 3 of 25

CPU VOLTAGE BLOCK

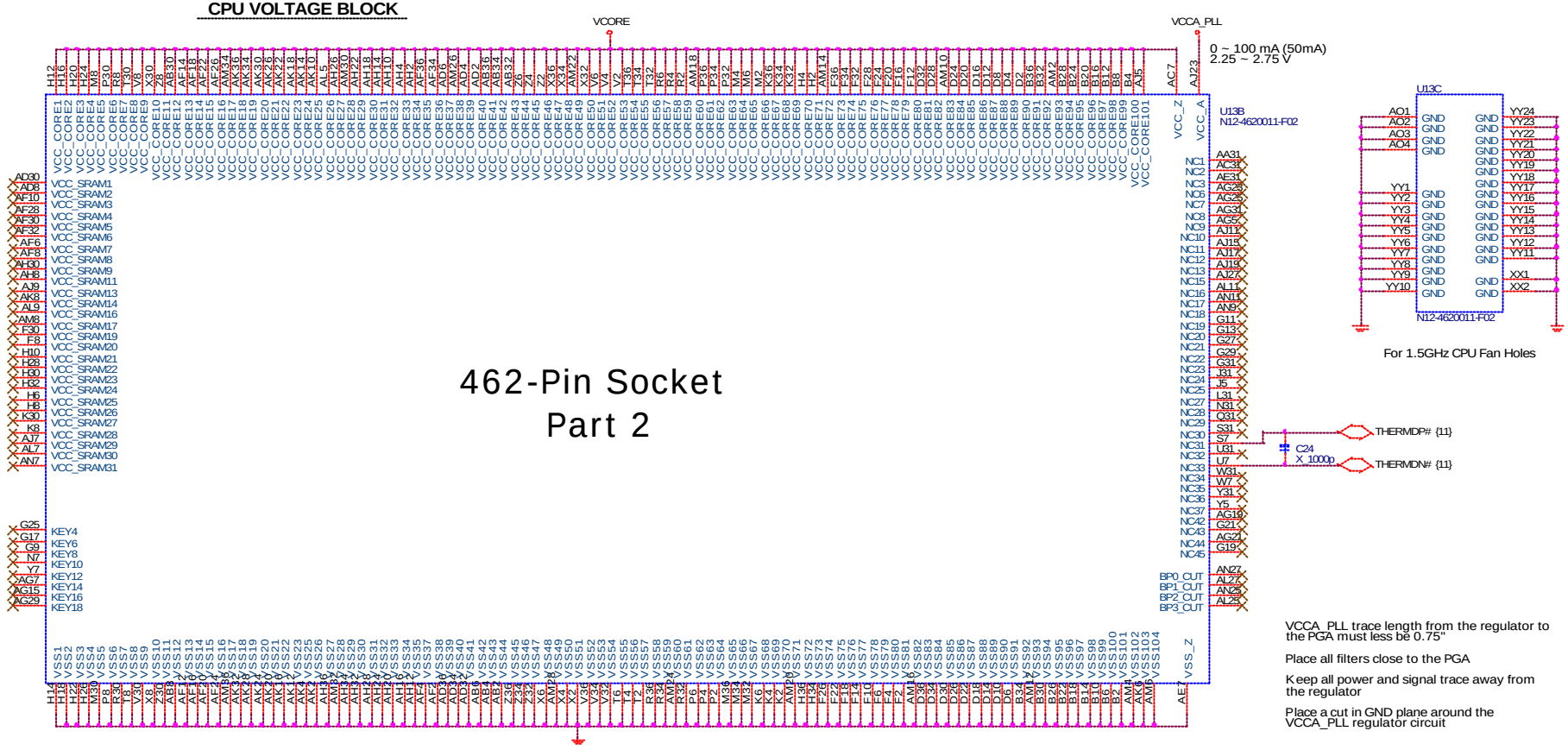

CPU DECOUPLING CAPACITORS

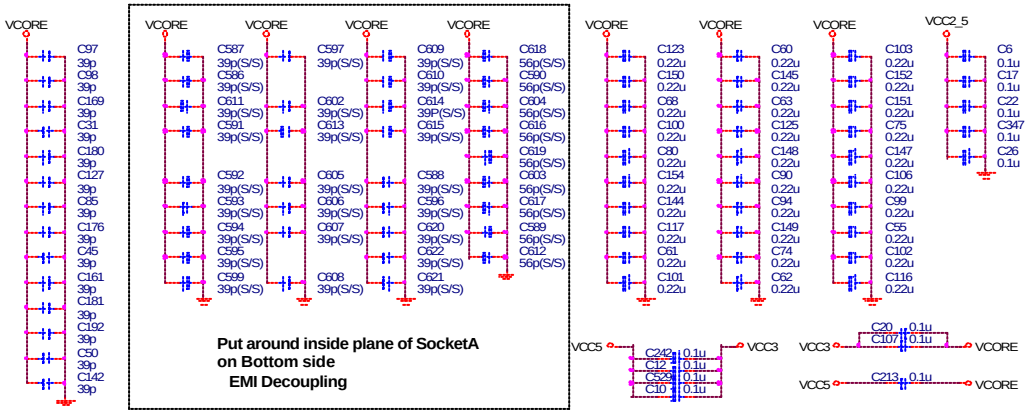

CPU PLL VOLTAGE BLOCK

(40mils trace / 60 mils space)

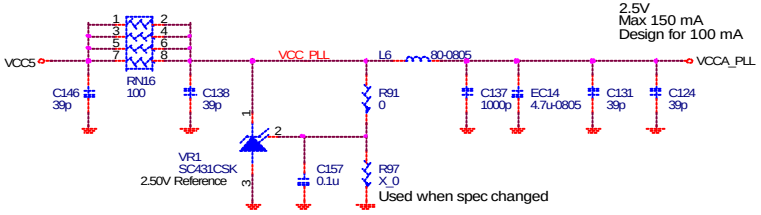

MICRO-STAR INt'L CO., LTD.

Title	AMD Socket462 CPU (Power)	
Size	Document Number (MS-6597)	Rev 0B
Date: Monday, July 08, 2002	Sheet 4 of 25	

CRUSH 18 HOST SIGNALS

BELONG TO CLKFWD GROUP[SADDIN] MATCH W/IN +/-10MILS OF GROUP 5/15, CLK:10/30
BELONG TO CLKFWD GROUP[SADDOUT] MATCH W/IN +/-10MILS OF GROUP 5/15, CLK:10/30
BELONG TO CLKFWD GROUP;MATCHED TO INDIVIDUAL CLKFWD GROUP
RESPECTIVELY.[SDATA0], [SDATA1], [SDATA2],[SDATA3] W/IN+/-10MILS OF GROUP

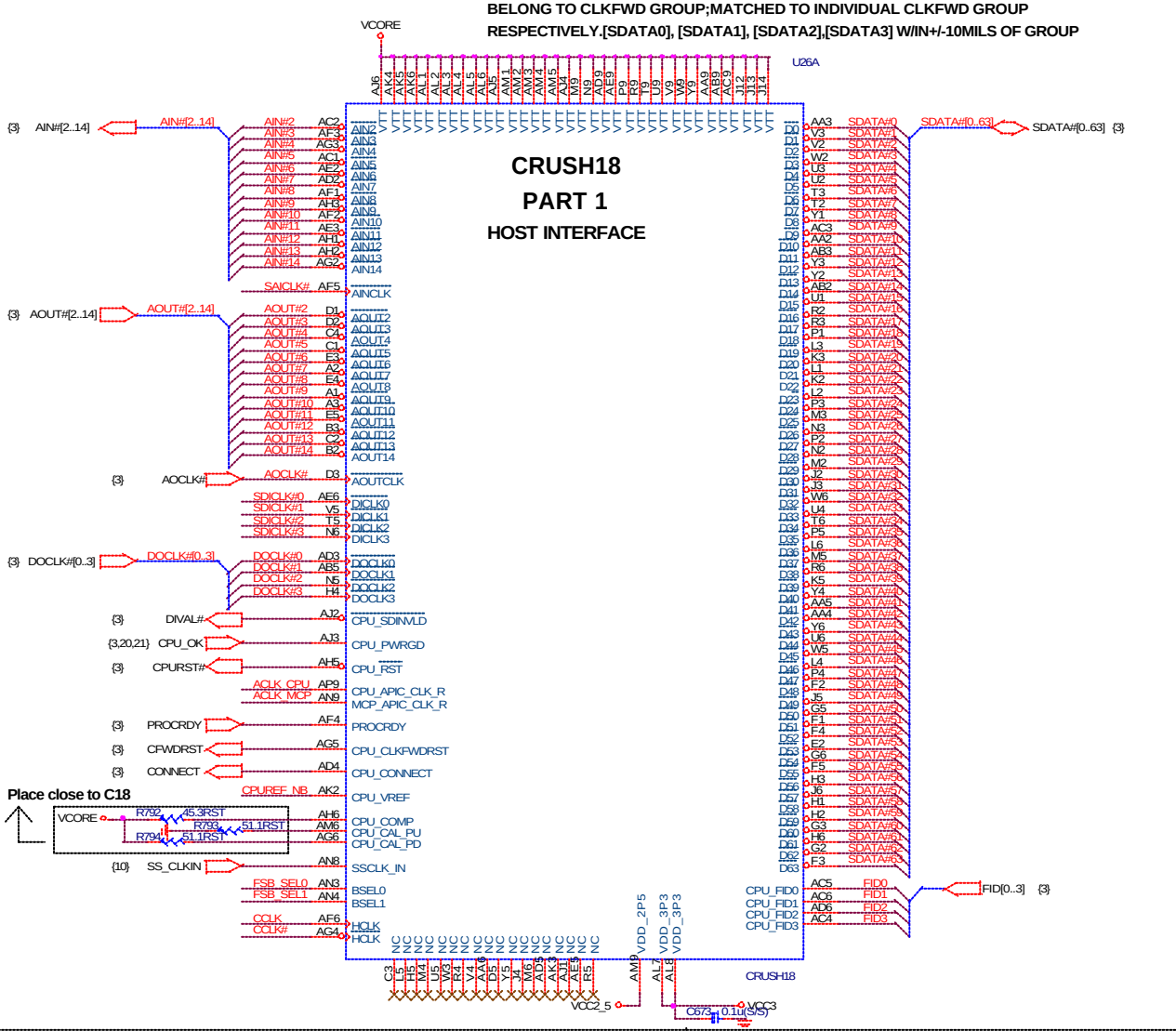

SYSTEM DATA-IN-CLK NOISE L/C BLOCK

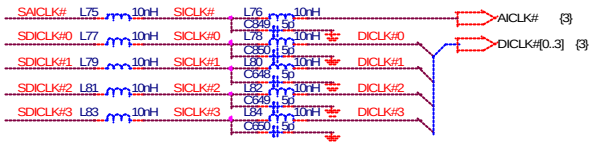

CLK must less DATA 1.5inchs
(Place in middle of Bus)

VID Selector Block

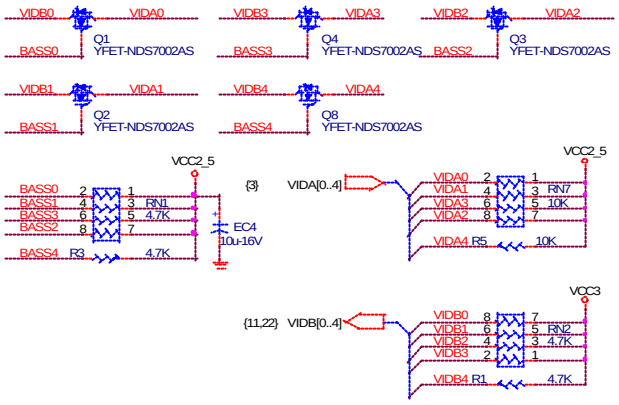

C18 Decoupling Caps

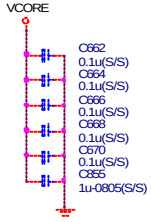

Place close to C18

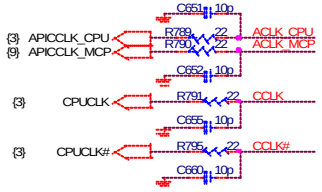

C18 VREF Volatge

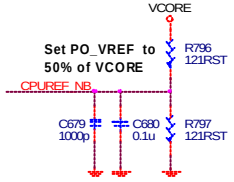

S3 Delay Block

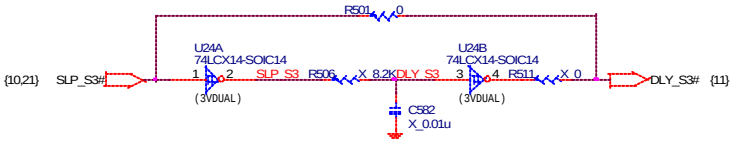

FSB Selection

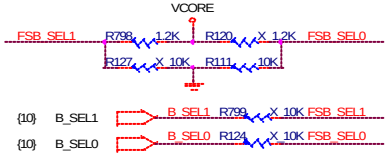

070702

MICRO-STAR INt'L CO., LTD.
H/W Project Leader : Joey Lee
H/W Project Engineer : Richard Shih

Title	Crush18 Host & VID Signals	
Size	Document Number (MS-6595)	Rev 0A
Date: Monday, July 08, 2002	Sheet 5 of 25	

CRUSH 18 MEMORY A SIGNALS

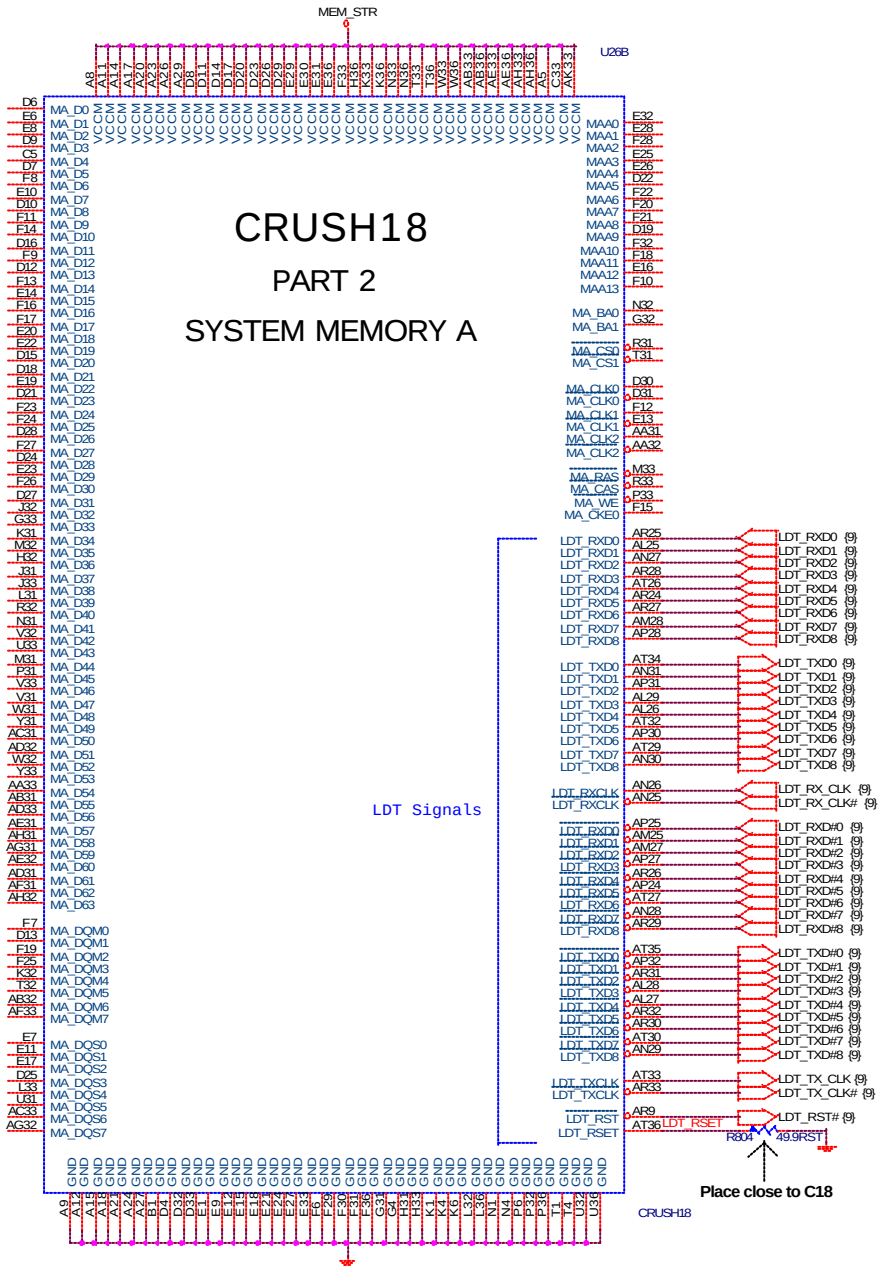

PLL Delay Block

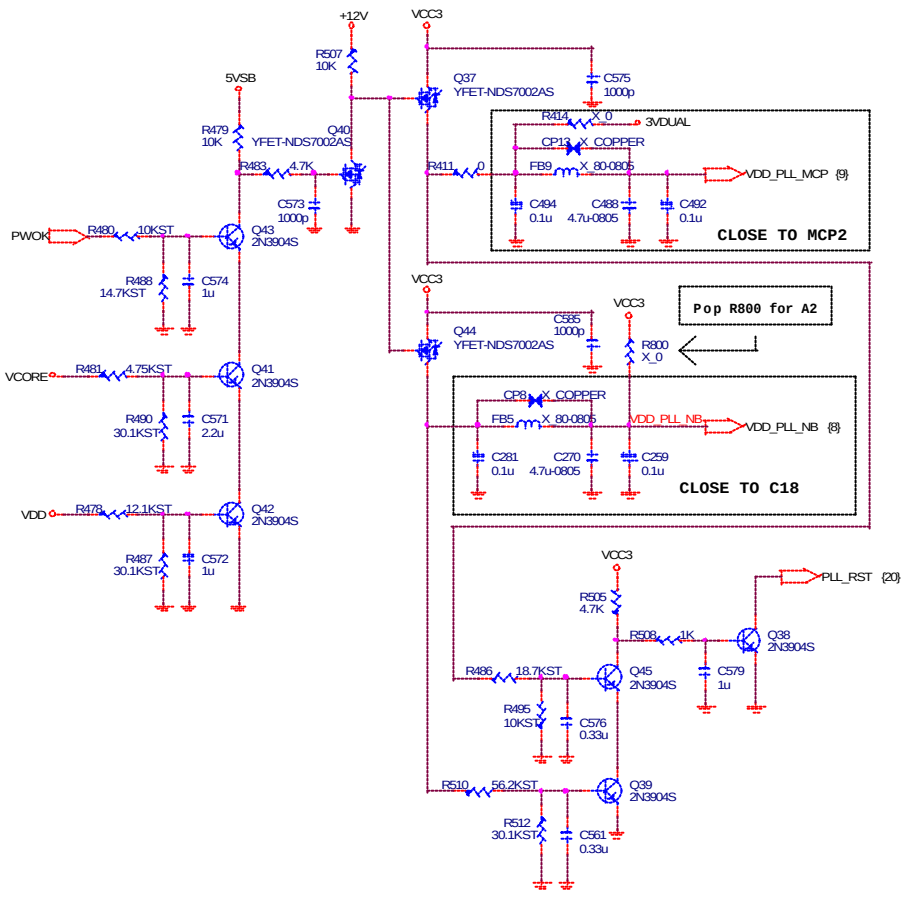

Decoupling capacitors

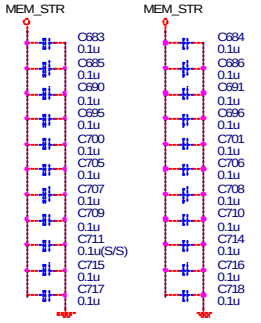

C18 Decoupling capacitors

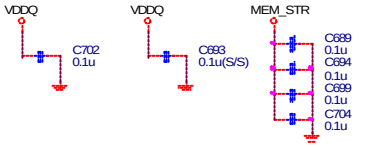

MICRO-STAR INt'L CO., LTD.
H/W Project Leader : Joey Lee
H/W Project Engineer : Richard Shih

Title: Crush18 Memory-A & LDT & PLL Delay Signals

Size | Document Number: (MS-6595) | Rev: 0A

Date: Monday, July 08, 2002 | Sheet 6 of 25

CRUSH 18 MEMORY SIGNALS

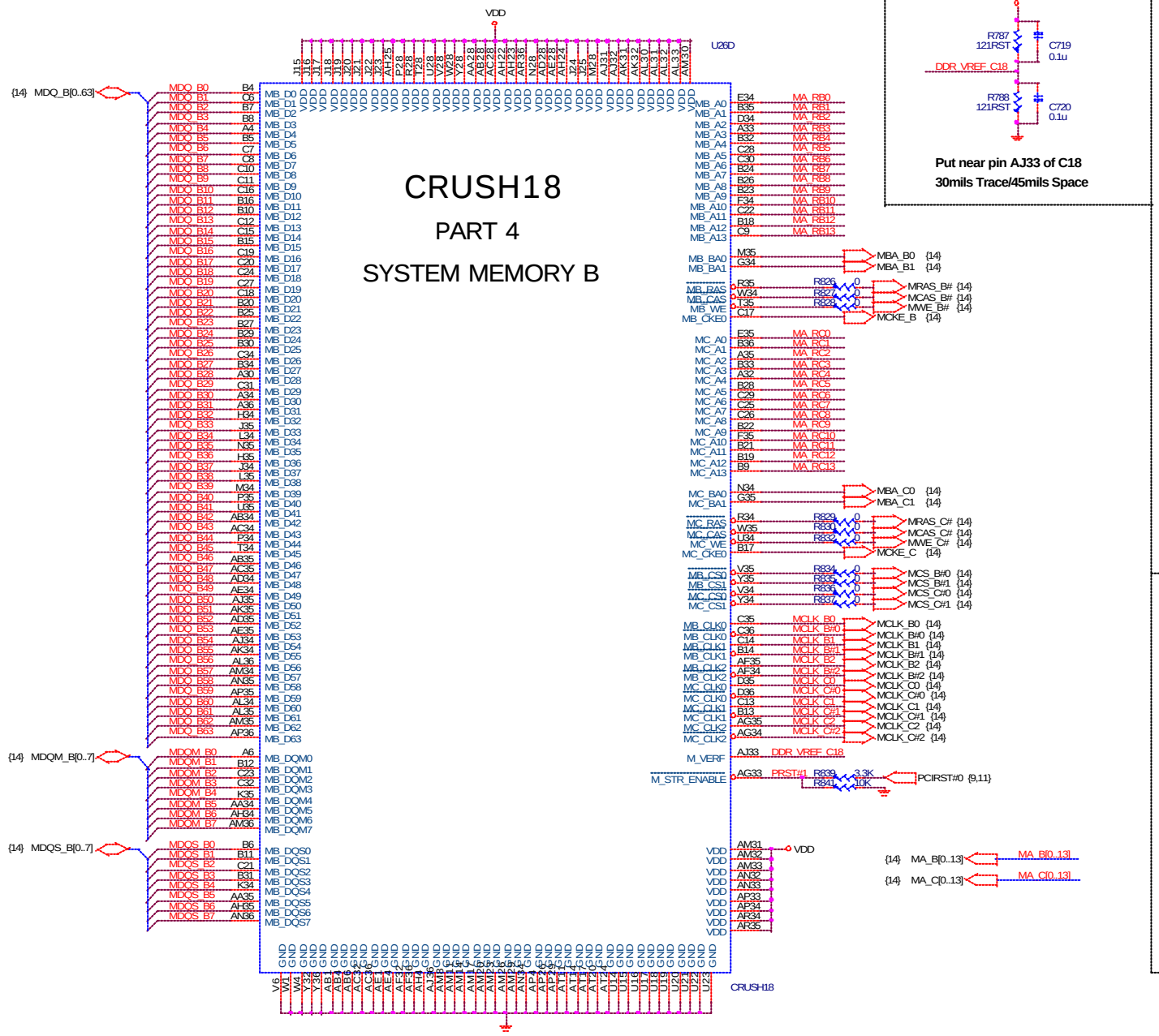

DDR REFENCE VOLTAGE

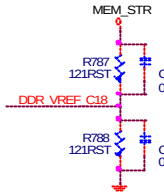

Put near pin AJ33 of C18
30mils Trace/45mils Space

DDR Terminational Resisitors

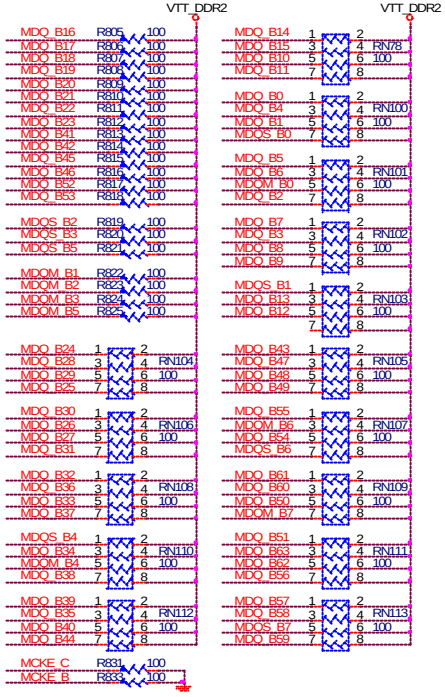

DDR Dampping Resisitors

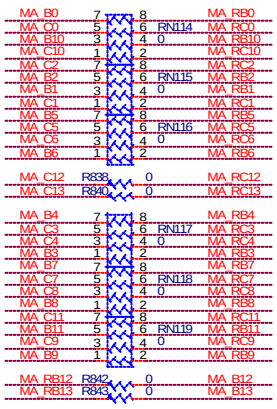

MICRO-STAR INt'L CO., LTD.
H/W Project Leader : Joey Lee
H/W Project Engineer : Richard Shih

Title: Crush18 Memory-B Signals

Size | Document Number: (MS-6595) | Rev: 0A

Date: Monday, July 08, 2002 | Sheet 7 of 25

CRUSH 18 AGP & VIDEO SIGNALS

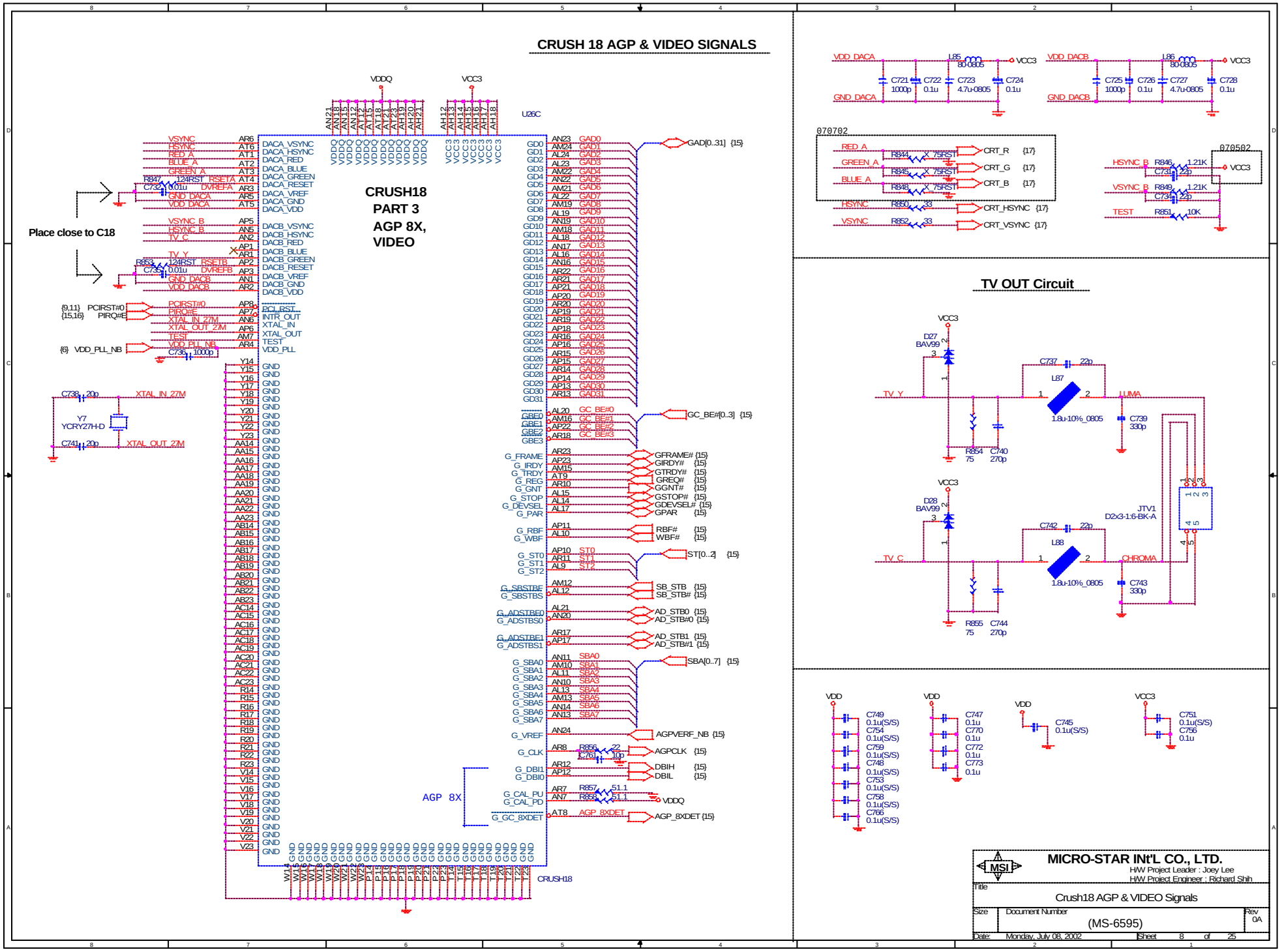

Title	Crush18 AGP & VIDEO Signals
Size	Document Number (MS-6595)
Rev	0A
Date:	Monday, July 08, 2002
Sheet	8 of 25

MICRO-STAR INt'L CO., LTD.
H/W Project Leader : Joey Lee
H/W Project Engineer : Richard Shih

MCP2 CPU & PCI & LDT & IDE SIGNALS

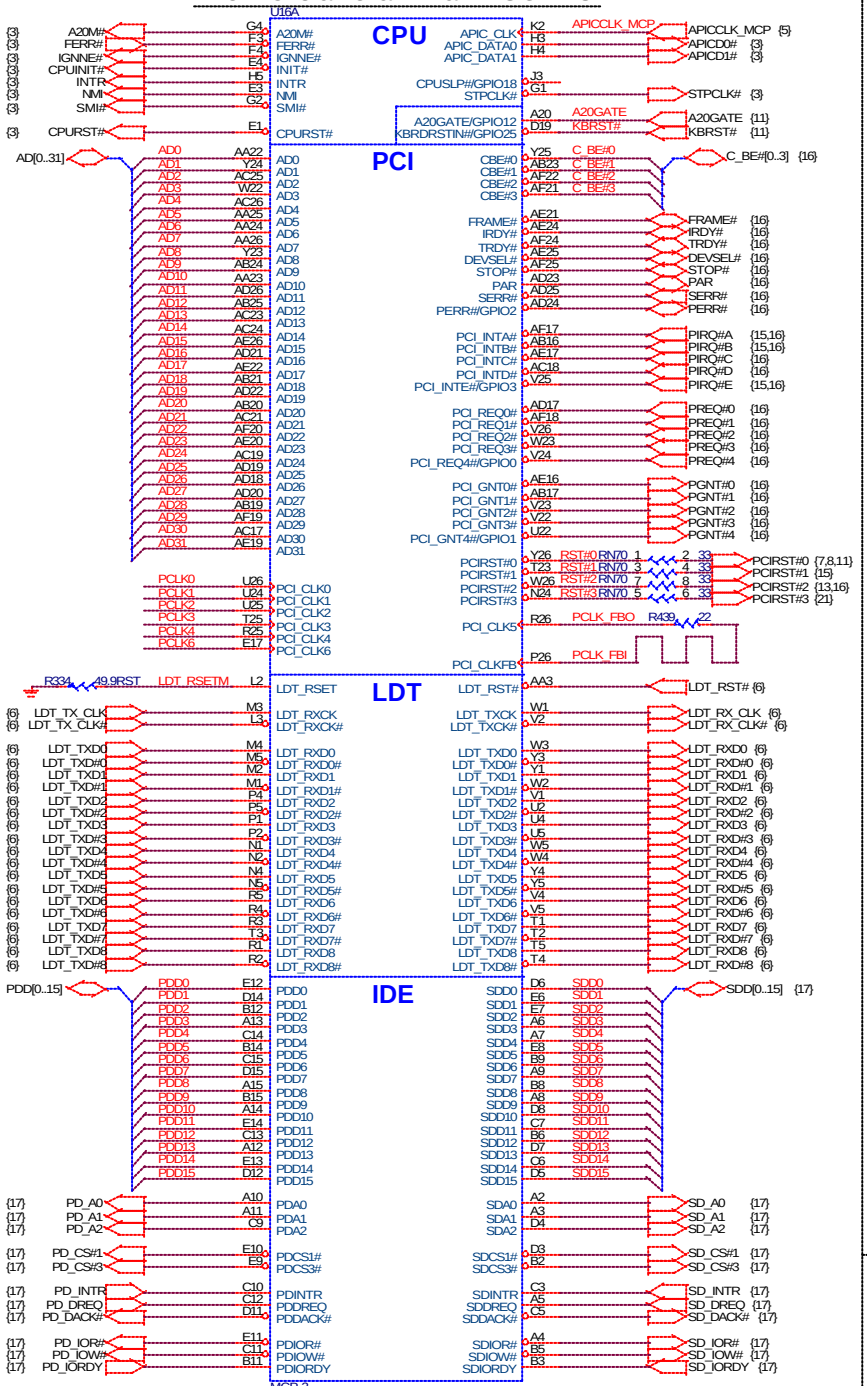

MCP2 POWER & GND SIGNALS

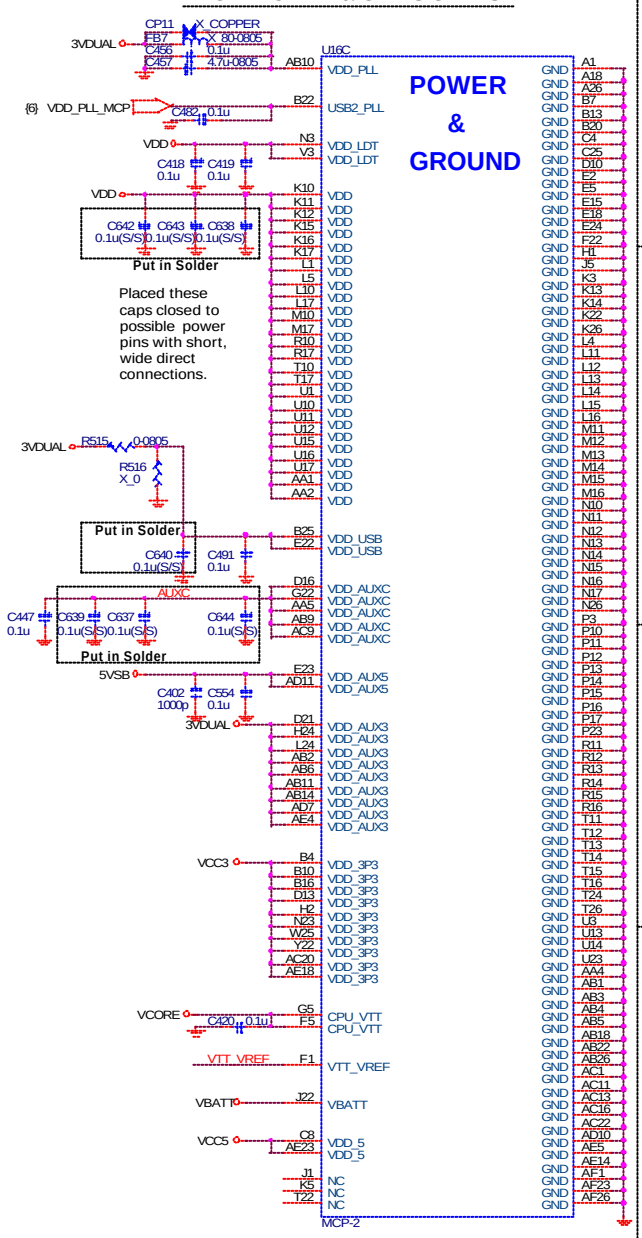

MCP Decoupling Capacitors

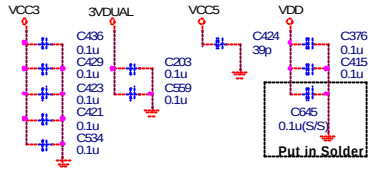

MCP2 PCI Clock

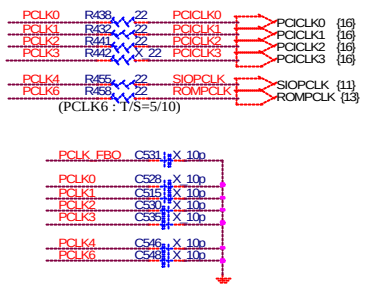

MCP2 REFERENCE VOLTAGE BLOCK

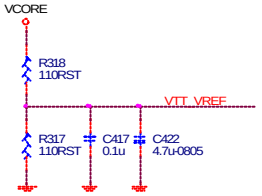

MCP2 AUXC VOLTAGE BLOCK

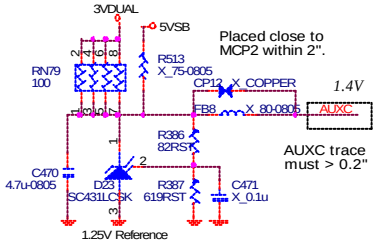

MCP2 STRAMPING RESISTORS

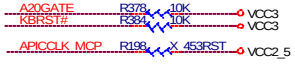

MICRO-STAR INt'L CO., LTD.

Title	MCP CPU & PCI & LDT & IDE Signals
Size	
Document Number	(MS-6595)
Rev	0A
Date: Monday, July 08, 2002	Sheet 9 of 25

MCP2 MAC, USB, 1394A, LPC & AC'97 SIGNALS

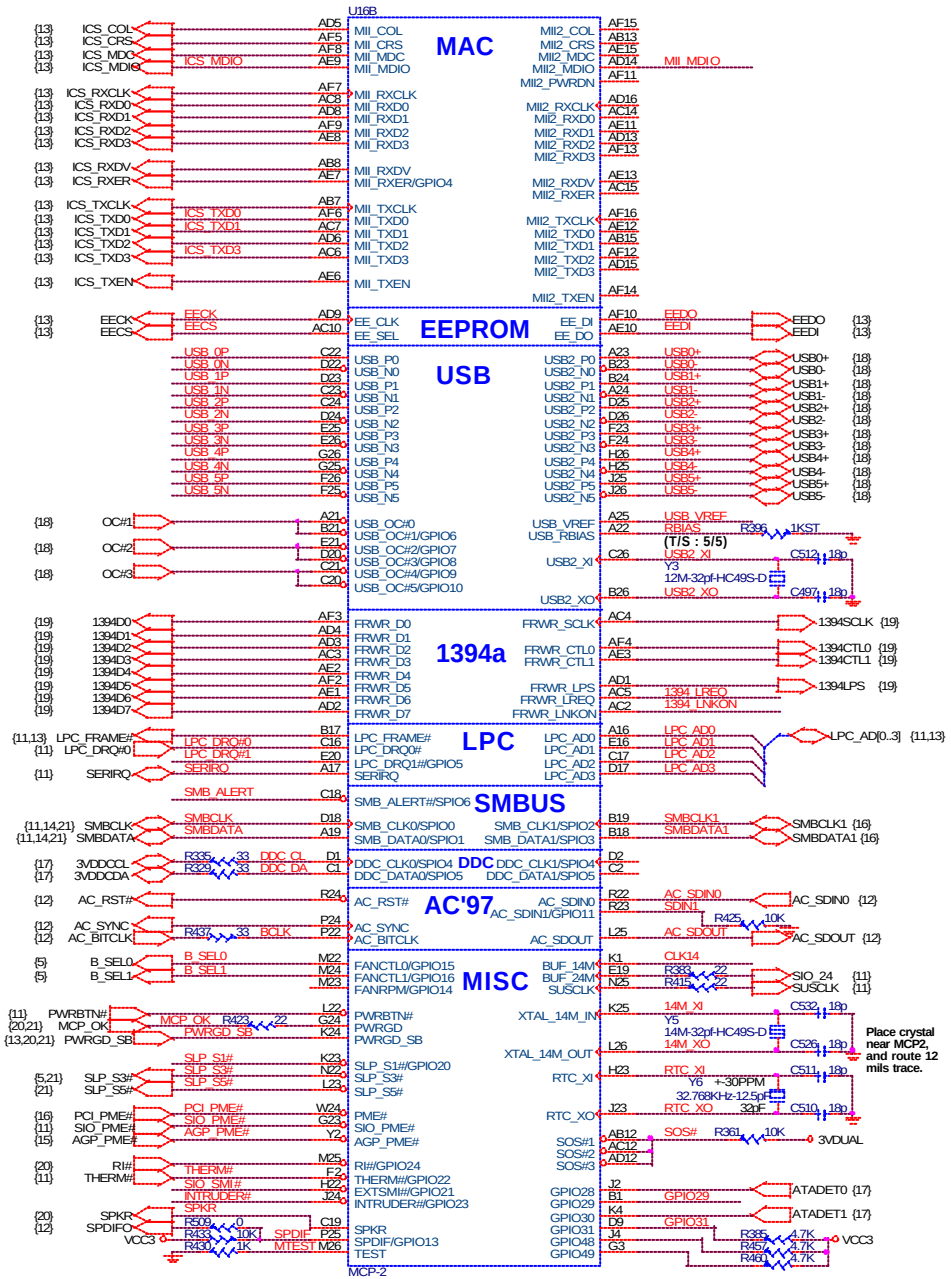

MCP2 PULL-UP & DOWN RESISTORS

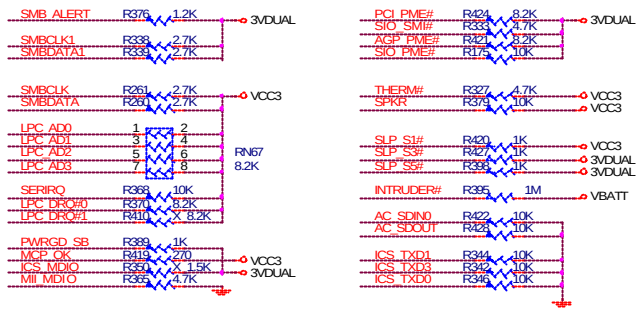

Battery

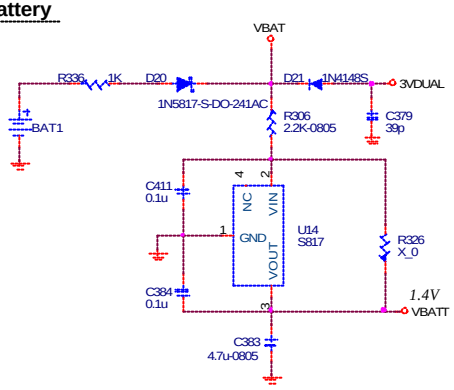

CMOS CLEAR JUMPER

JBAT1	CMOS Status
1 - 2	Normal
2 - 3	Clear CMOS

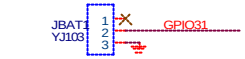

PASSWORD CLEAR JUMPER

JPWD1	
Short	Normal
OPEN	CLEAR PASSWORD

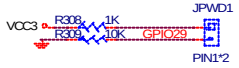

MCP2 USB & USB2 BLOCK

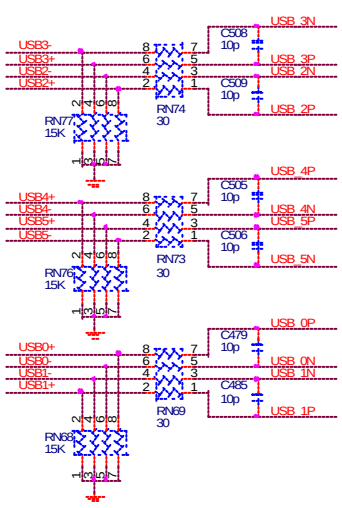

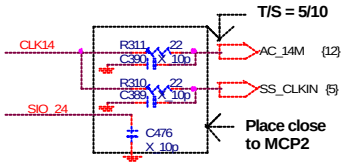

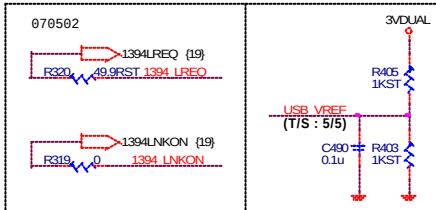

MICRO-STAR INt'L CO., LTD.

Title	MCP CPU & IDE & LPC & MAC & USB Signals	
Size	Document Number (MS-6595)	Rev 0A
Date: Monday, July 08, 2002	Sheet 10 of 25	

LPC SUPER I/O W83627HF

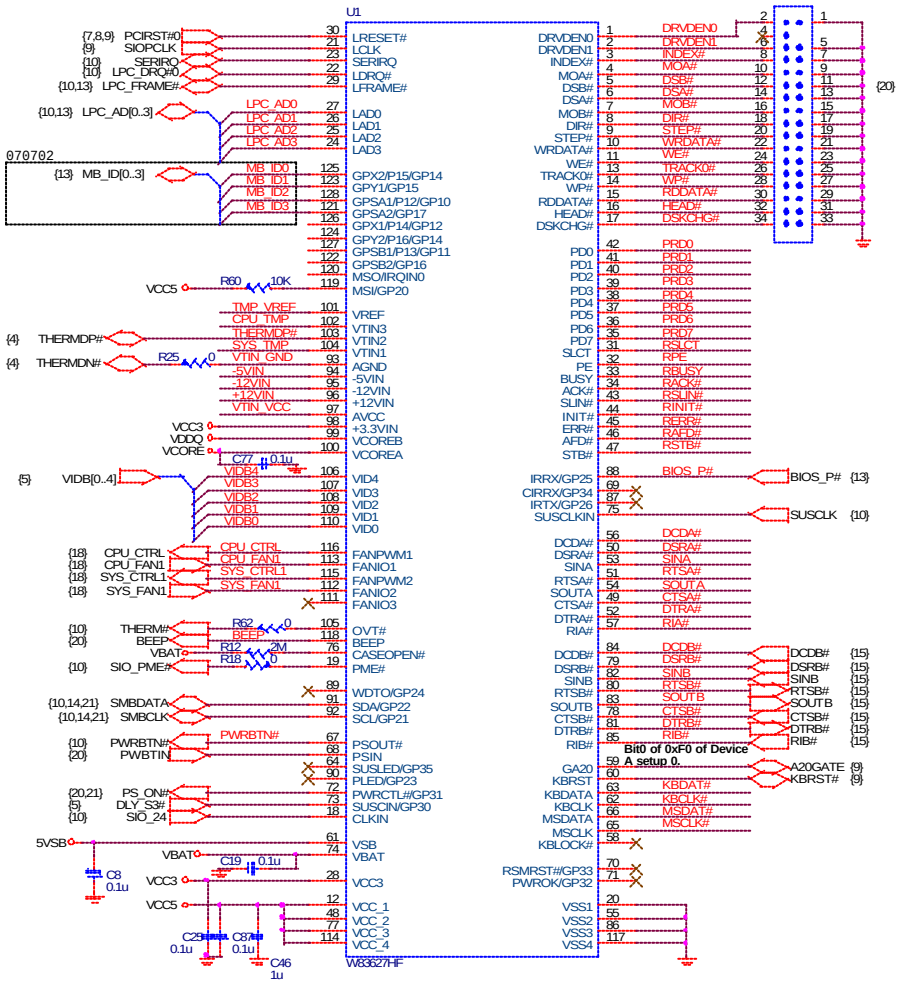

FLOPPY CONNECTOR

SERIAL PORT 1

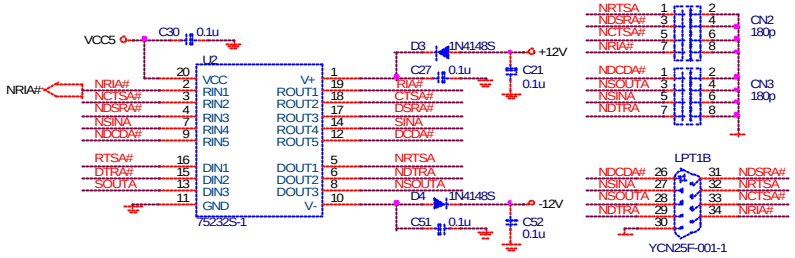

PARALLAL PORT

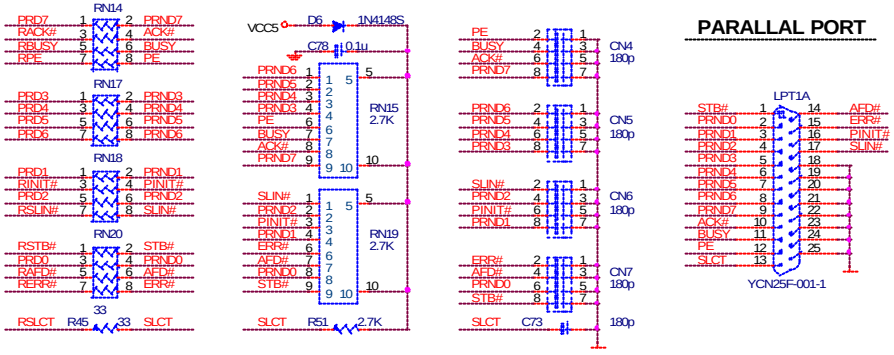

PS2 KEYBOARD & MOUSE CONNECTOR

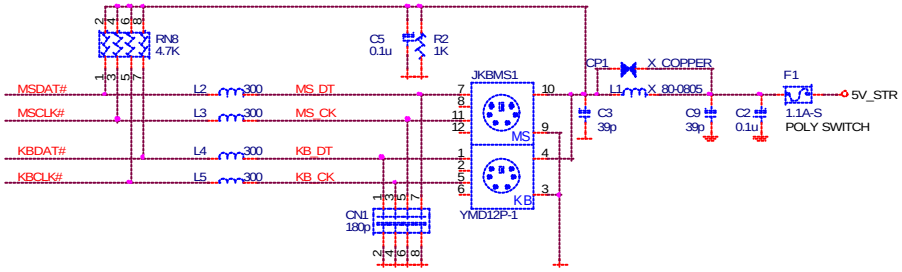

LPC I/O STRAPPING RESISTOR

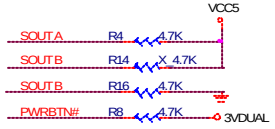

SOUTA	L: Disable KBC	H: Enable KBC
SOUTB	L: 24MHZ	H: 48MHZ
RTSA#	L: CFAD=2E	H: CFAD=4E
DTRA#	L: PNP Default	H: PNP no Default

THERMAL RESISTOR BLOCK

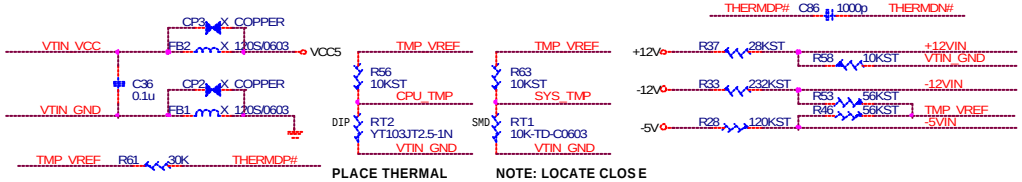

PLACE THERMAL SENSOR WITHIN CPU SOCKET

NOTE: LOCATE CLOSE STATUS PANEL

COPPER

MSI MICRO-STAR INt'L CO., LTD.

Title: LPC SUPER I/O & CONNECTORS

Size | Document Number: (MS-6595) | Rev: 0A

Date: Monday, July 08, 2002 | Sheet 11 of 25

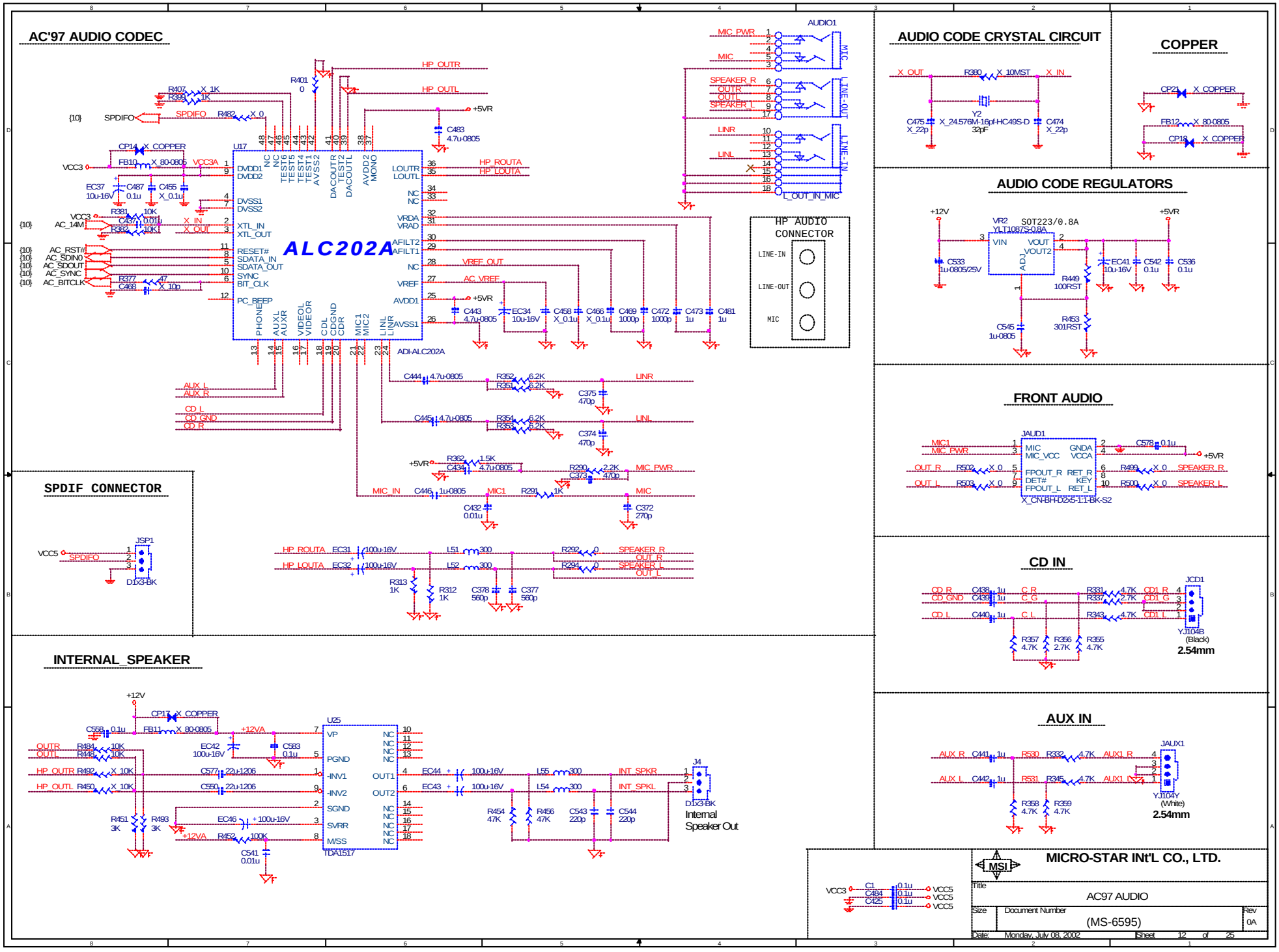
AC'97 AUDIO CODEC
ALC202A
U17
ADI-ALC202A
AUDIO1
HP AUDIO CONNECTOR
LINE-IN
LINE-OUT
MIC
AUDIO CODE CRYSTAL CIRCUIT
COPPER
AUDIO CODE REGULATORS
VR2 SOT223/0.8A
YLT1087S-0.8A
FRONT AUDIO
JAUD1
X_CN-BH-D2x5-1.1-BK-S2
SPDIF CONNECTOR
JSP1
D1X3-BK
CD IN
JCD1
YJ104B
(Black)
2.54mm
INTERNAL_SPEAKER
U25
TDA1517
J4
D1X3-BK
Internal
Speaker Out
AUX IN
JAUX1
YJ104Y
(White)
2.54mm
MICRO-STAR INt'L CO., LTD.
Title
AC97 AUDIO
Size
Document Number
(MS-6595)
Rev
0A
Date: Monday, July 08, 2002
Sheet 12 of 25

MII PHY LAN ICS1893

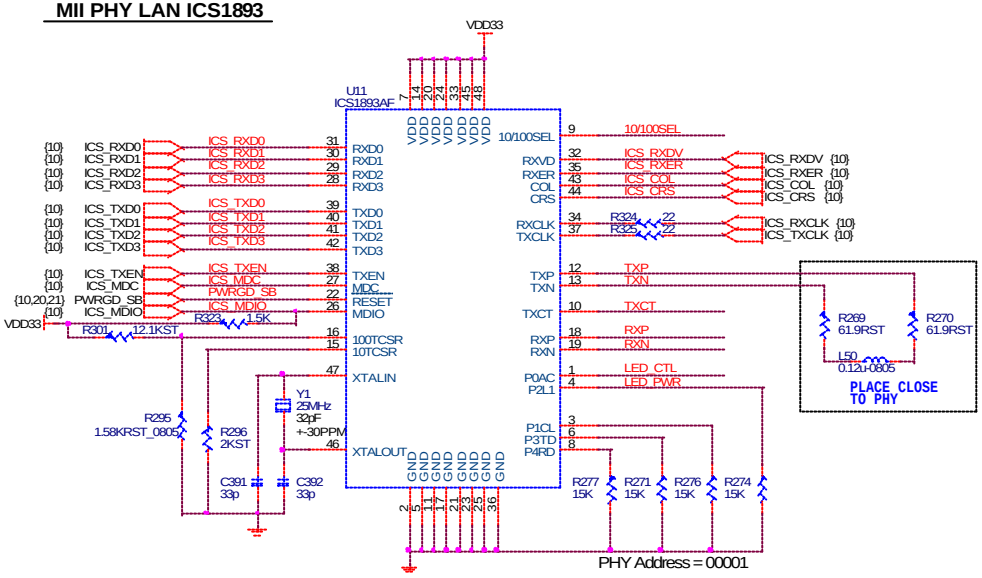

LAN EEPROM

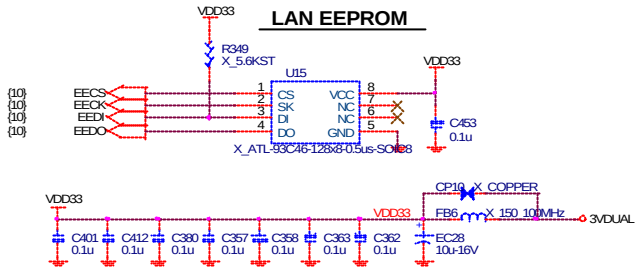

LPC Flash EEPROM

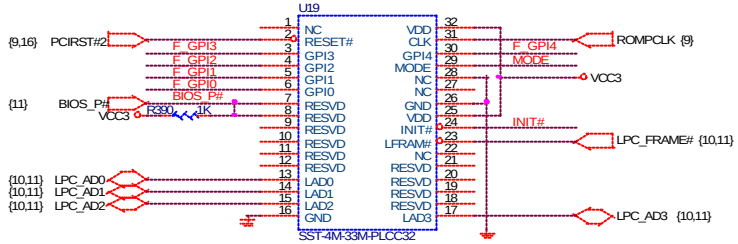

M/B Revision ID

070702

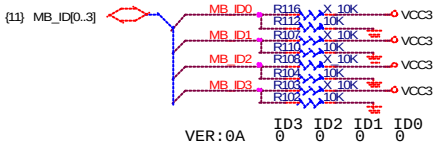

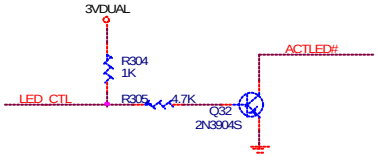

RJ45 Connector

Trace from RJ45 to Transformer must less than 1 inch.

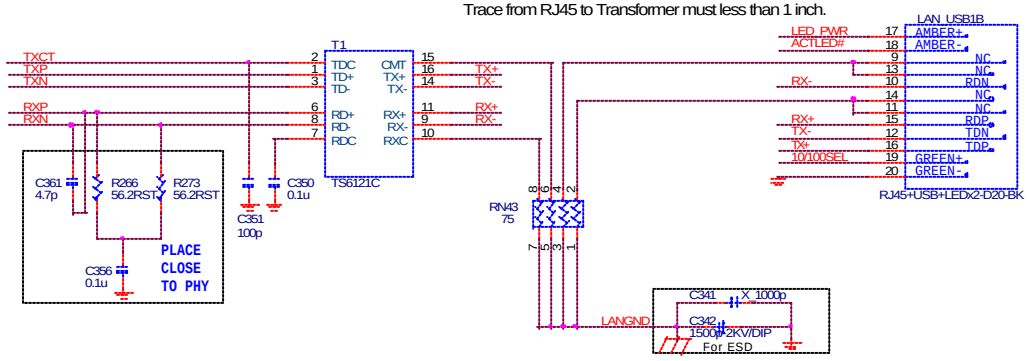

EEPROM Strapping Resistors

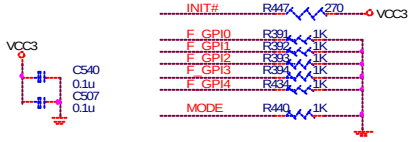

Interface MODE Selection		
HIGH	Programmer mode	
LOW	LPC mode	Default

MICRO-STAR INt'L CO., LTD.

Title: MII LAN ICS1893AF & LPC Flash EEPROM

Size | Document Number: (MS-6595) | Rev: 0A

Date: Monday, July 08, 2002 | Sheet 13 of 25

DDR DIMM1

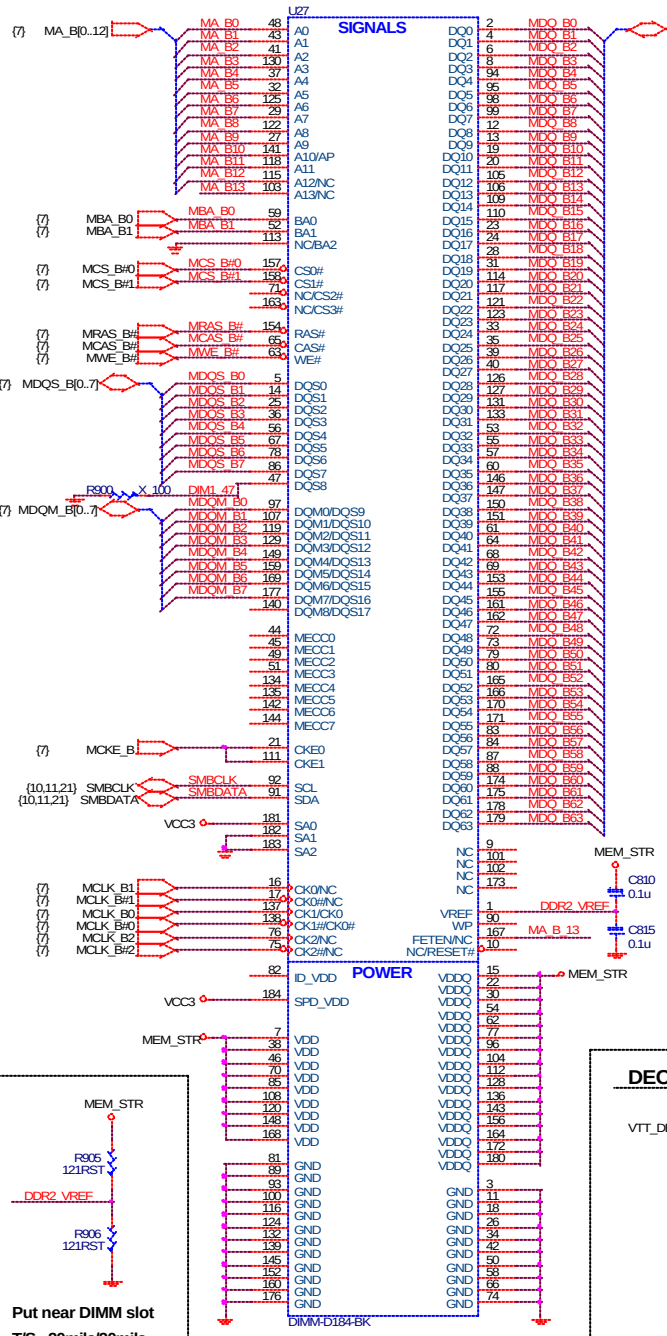

DDR DIMM2

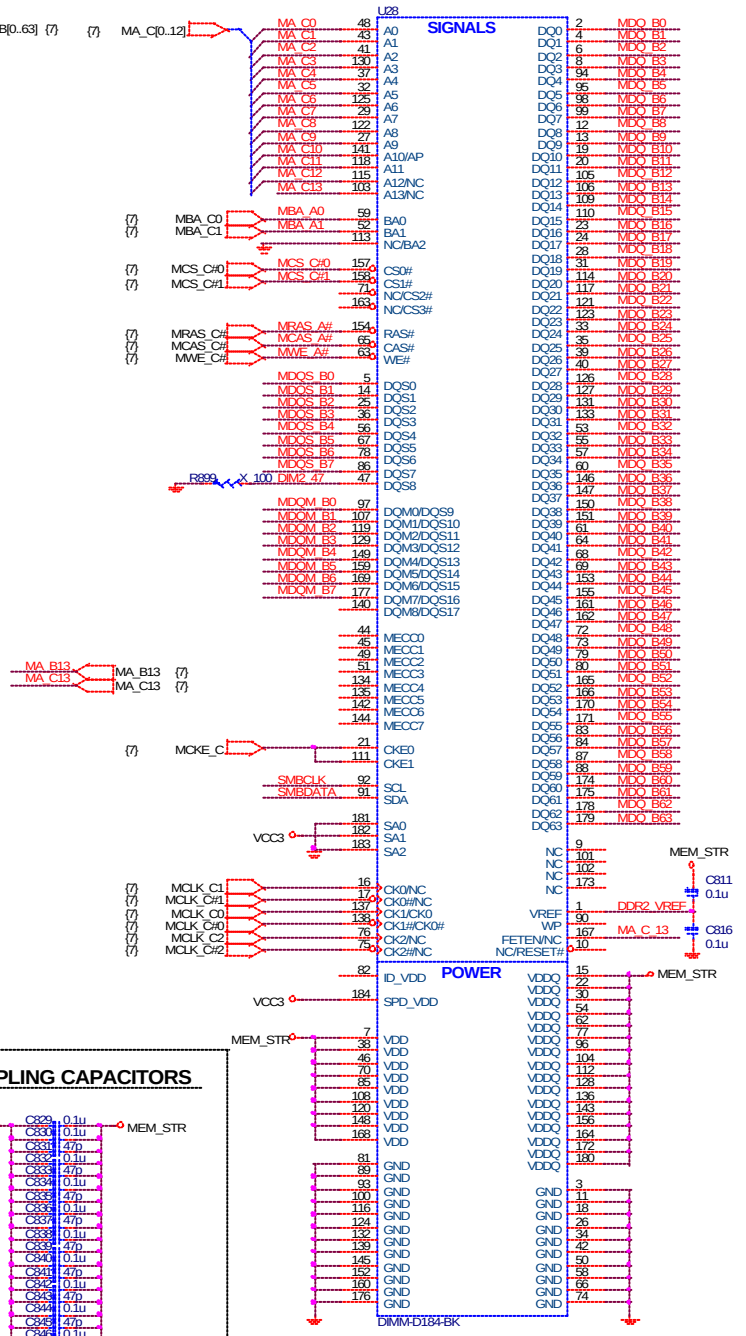

DDR Terminational Resisitors

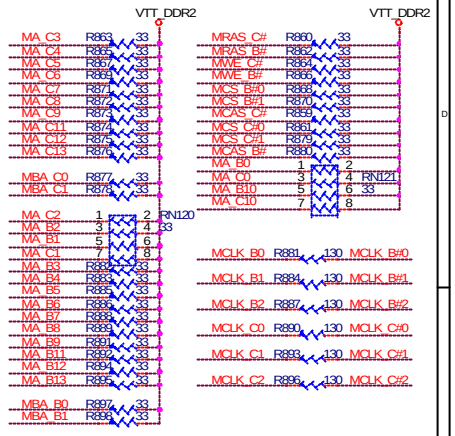

DECOUPLING CAPACITORS

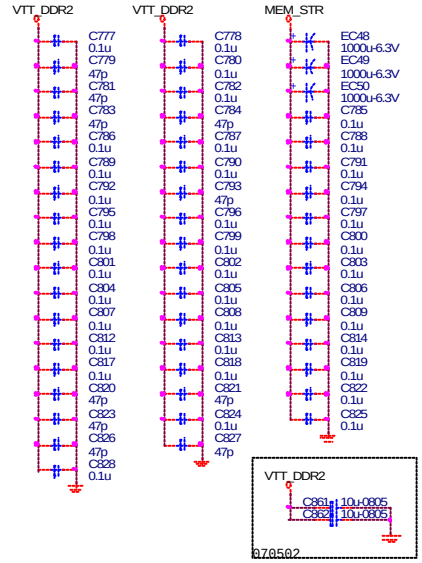

Place these decoupling capacitors close to VTT_DDR termination resistors.

One decoupling capacitor for each R-pack.

DECOUPLING CAPACITORS

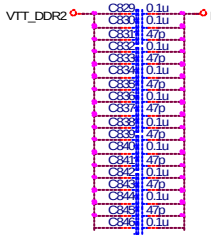

MSI

MICRO-STAR INt'L CO., LTD.

H/W Project Leader : Joey Lee

H/W Project Engineer : Richard Shih

Title	DDR DIMM 1 & 2	
Size	Document Number (MS-6595)	Rev 0A
Date: Monday, July 08, 2002	Sheet 14 of 25	

AGP 3.0 4X/8X SLOT

VCC5 = 60mils trace / 15 mils space

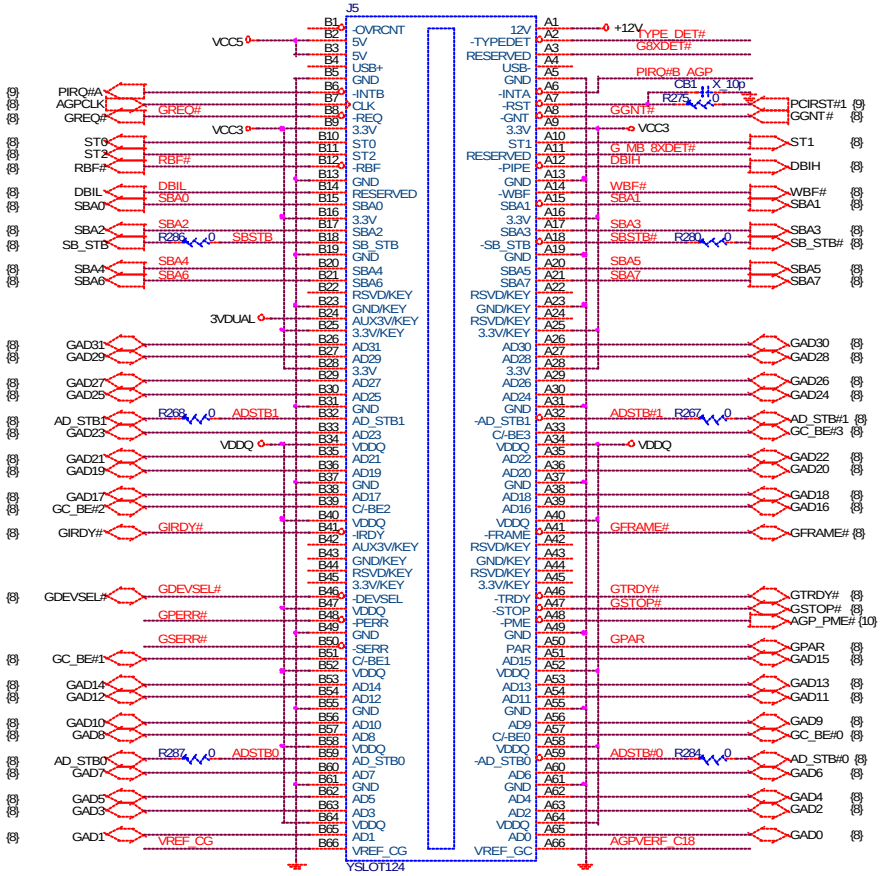

PIRQ#A / PIRQ#E

LDT Voltage Regulator

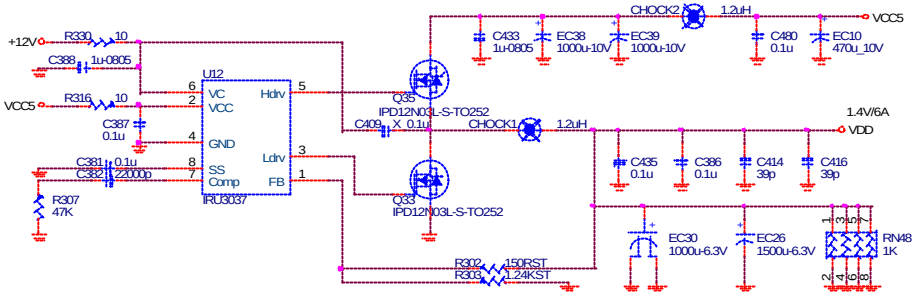

AGP SIGNAL REFERENCE CIRCUIT

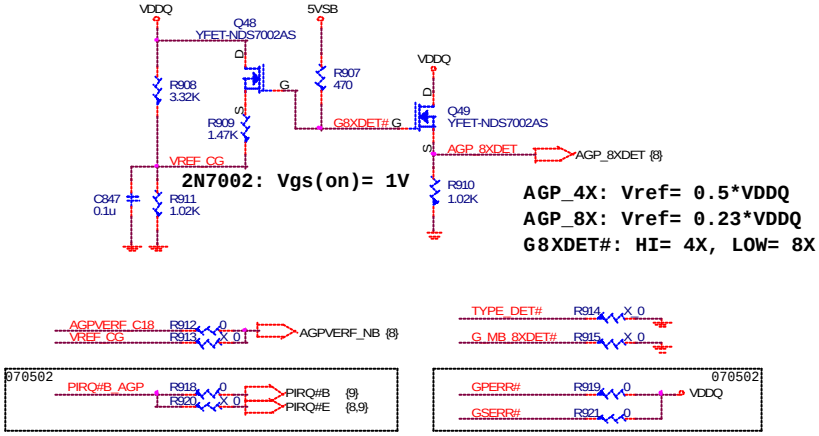

SERIAL PORT 2

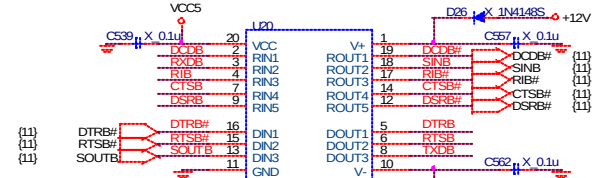

COM2 HEADER

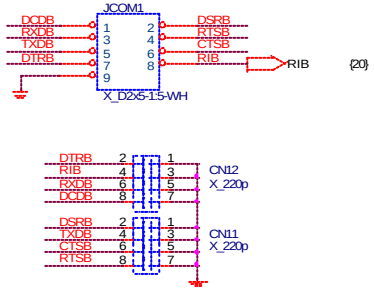

AGP SLOT DECOUPLING CAPACITORS

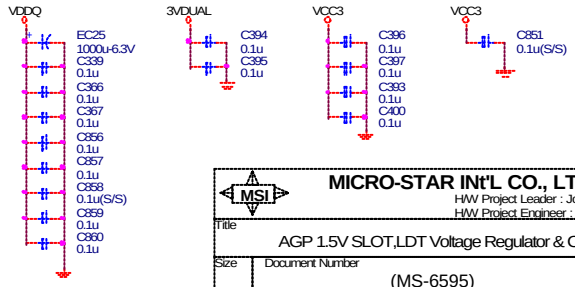

MICRO-STAR INt'L CO., LTD.

H/W Project Leader : Joey Lee
H/W Project Engineer : Richard Shih

Title	AGP 1.5V SLOT,LDT Voltage Regulator & COM2	
Size	Document Number (MS-6595)	Rev 0A
Date: Monday, July 08, 2002	Sheet 15 of 25	

PCI SLOT 1 (PCI VER: 2.2 COMPLY)

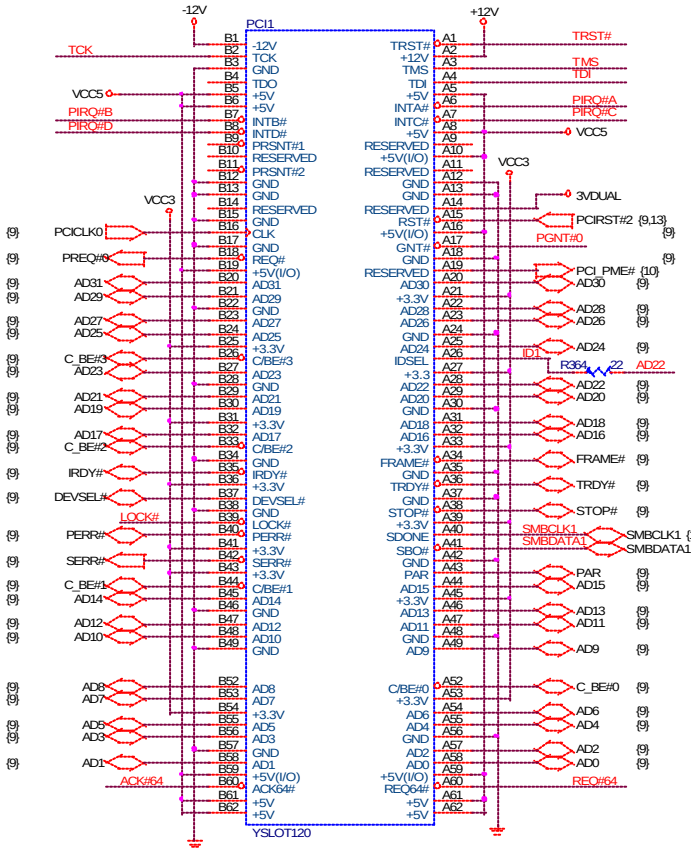

IDSEL = AD22
MASTER = PREQ#0
PIRQ#A

PCI SLOT 2 (PCI VER: 2.2 COMPLY)

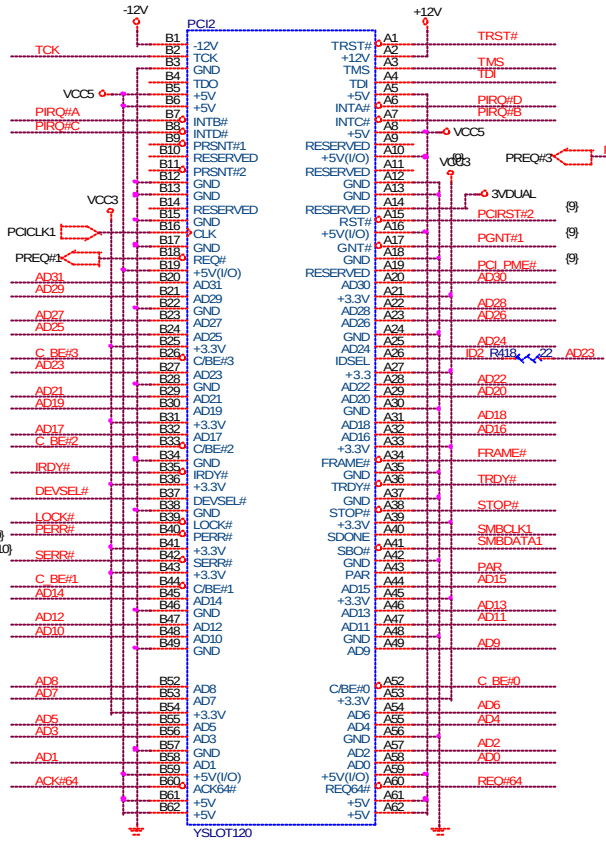

IDSEL = AD23
MASTER = PREQ#1
PIRQ#D

PCI SLOT 3 (PCI VER: 2.2 COMPLY)

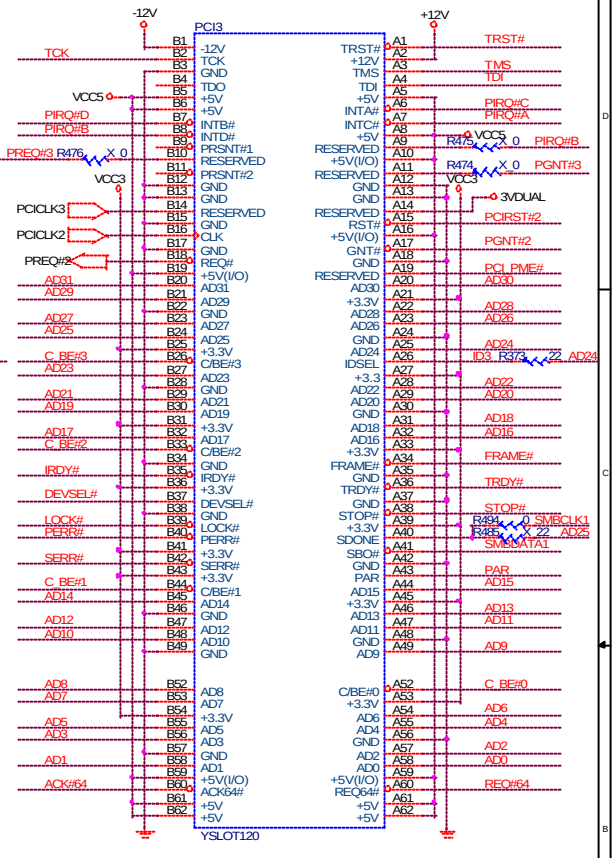

IDSEL = AD24
MASTER = PREQ#2
PIRQ#C

IDSEL = AD25
SLAVE = PREQ#3
PIRQ#B

PCI PULL-UP / DOWN RESISTORS

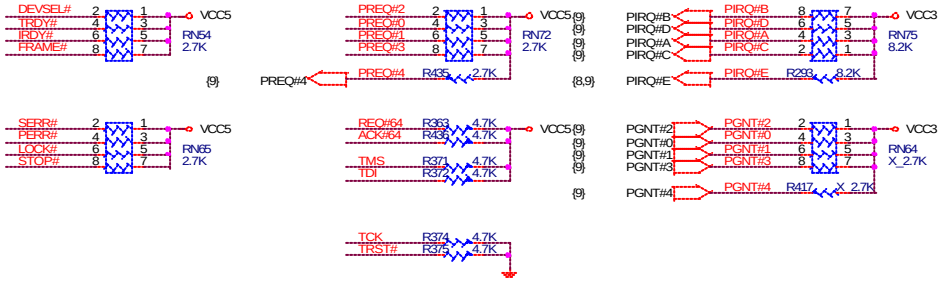

PCI SLOT DECOUPLING CAPACITORS

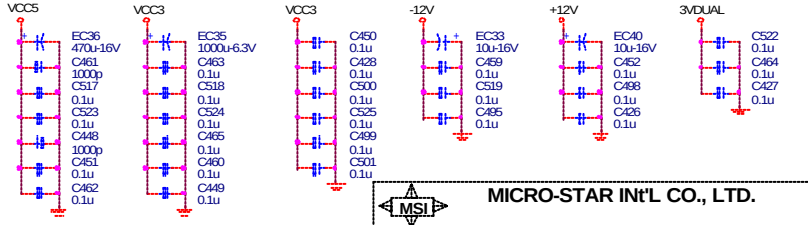

MICRO-STAR INt'L CO., LTD.

Title: PCI 1& 2 & 3 Slots

Size | Document Number: (MS-6595) | Rev: 0A

Date: Monday, July 08, 2002 | Sheet 16 of 25

ATA 33/66/100 IDE Connectors

PRIMARY IDE BLOCK

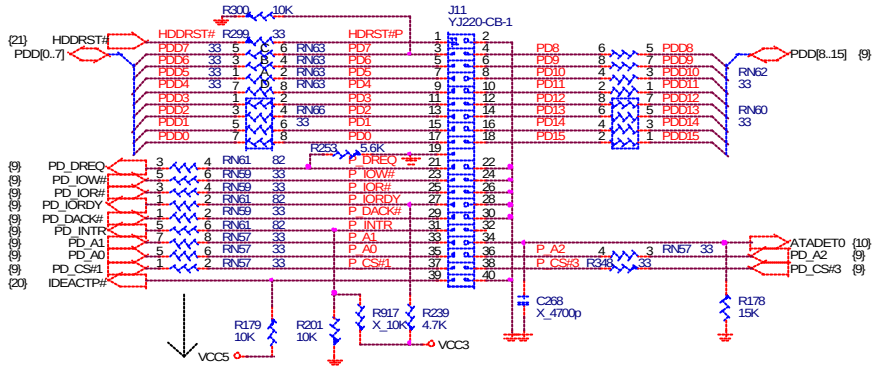

All series resistors close
to MCP2 within 500 mils.

SECONDARY IDE BLOCK

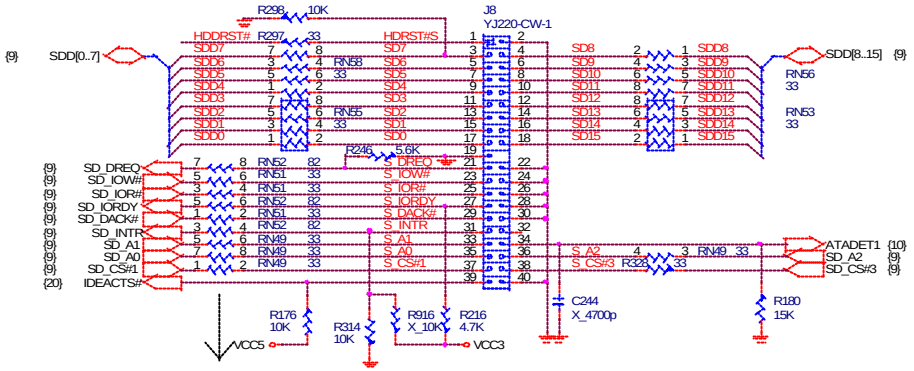

All series resistors close
to MCP2 within 500 mils.

Video Connector

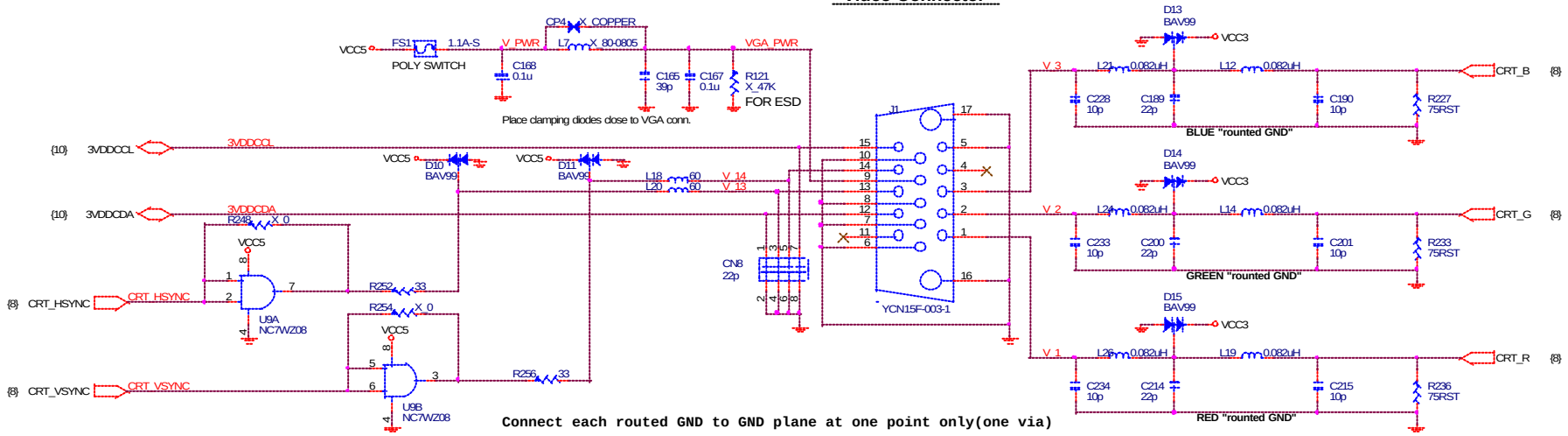

Connect each routed GND to GND plane at one point only(one via)

Close to VGA Conn.

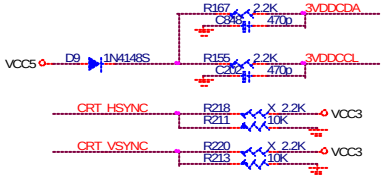

Function		LDT internal terminations		CPU Type strapping	
		Enable	Disable	Intel	AMD
HSYNC	Buffered	0	1	X	X
	Non-Buffered	0*	1	X	X
VSYNC	Buffered	X	X	1	0
	Non-Buffered	X	X	1	0*

Use 10K pu/pd if VSYNC/HSYNC are buffered;
use 2.2K if VSYNC/HSYNC are un-buffered.
* Default

MICRO-STAR INt'L CO., LTD.

Title: ATA33/66/100 IDE & VIDEO Connectors

Size | Document Number: (MS-6595) | Rev: 0A

Date: Monday, July 08, 2002 | Sheet 17 of 25

POWER CIRCUIT FOR LAN_USB PORT 4,5

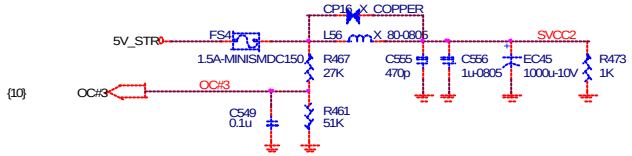

POWER CIRCUIT FOR I1394_USB PORT 0,1

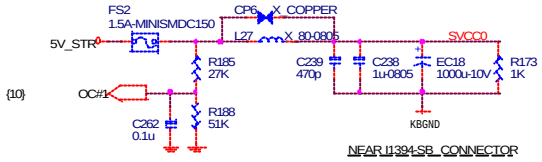

POWER CIRCUIT FOR USB PORT 0,1,2,3

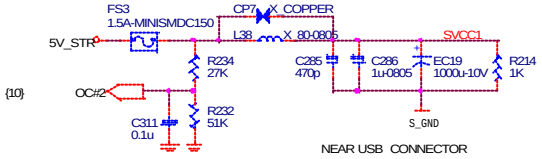

CPU FAN

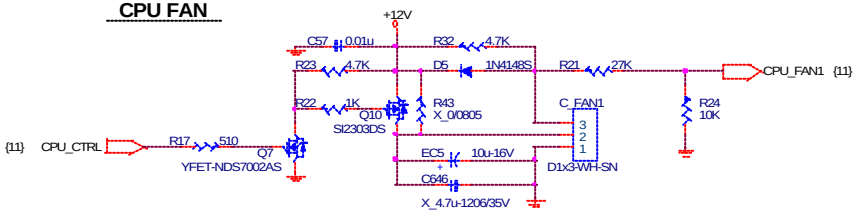

SYSTEM FAN

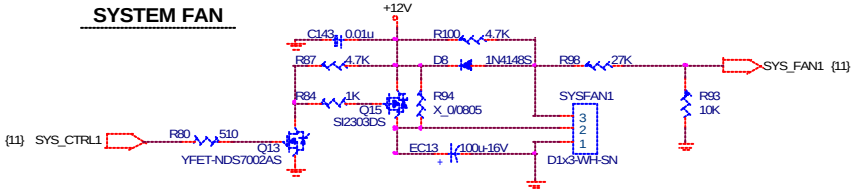

FRONT PANEL USB CONNECTOR FOR USB PORT 4,5

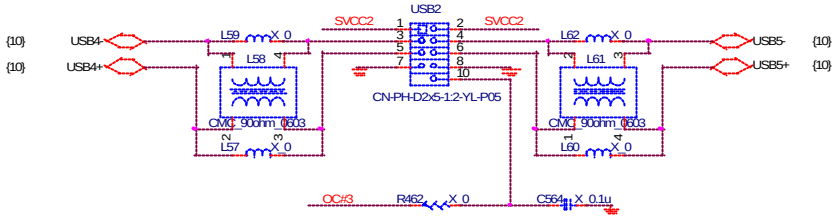

REAR PANEL LAN_USB CONNECTOR FOR USB PORT 2,3

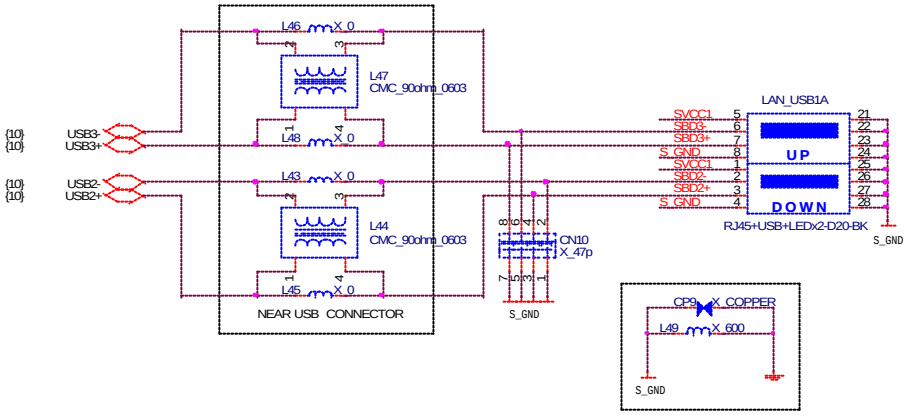

REAR PANEL I1394_USB CONNECTOR FOR USB PORT 0,1

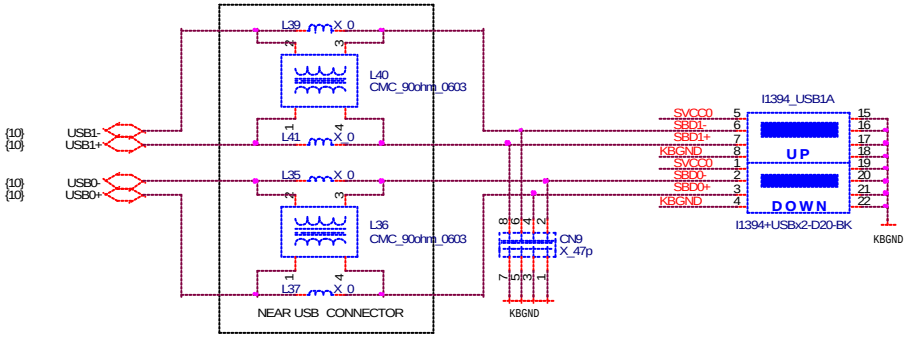

MSI

MICRO-STAR INt'L CO., LTD.

H/W Project Leader : Joey Lee
H/W Project Engineer : Richard Shih

Title	FAN & USB Connectors	
Size	Document Number (MS-6595)	Rev 0A
Date: Monday, July 08, 2002	Sheet 18 of 25	

I1394 PHY FW803

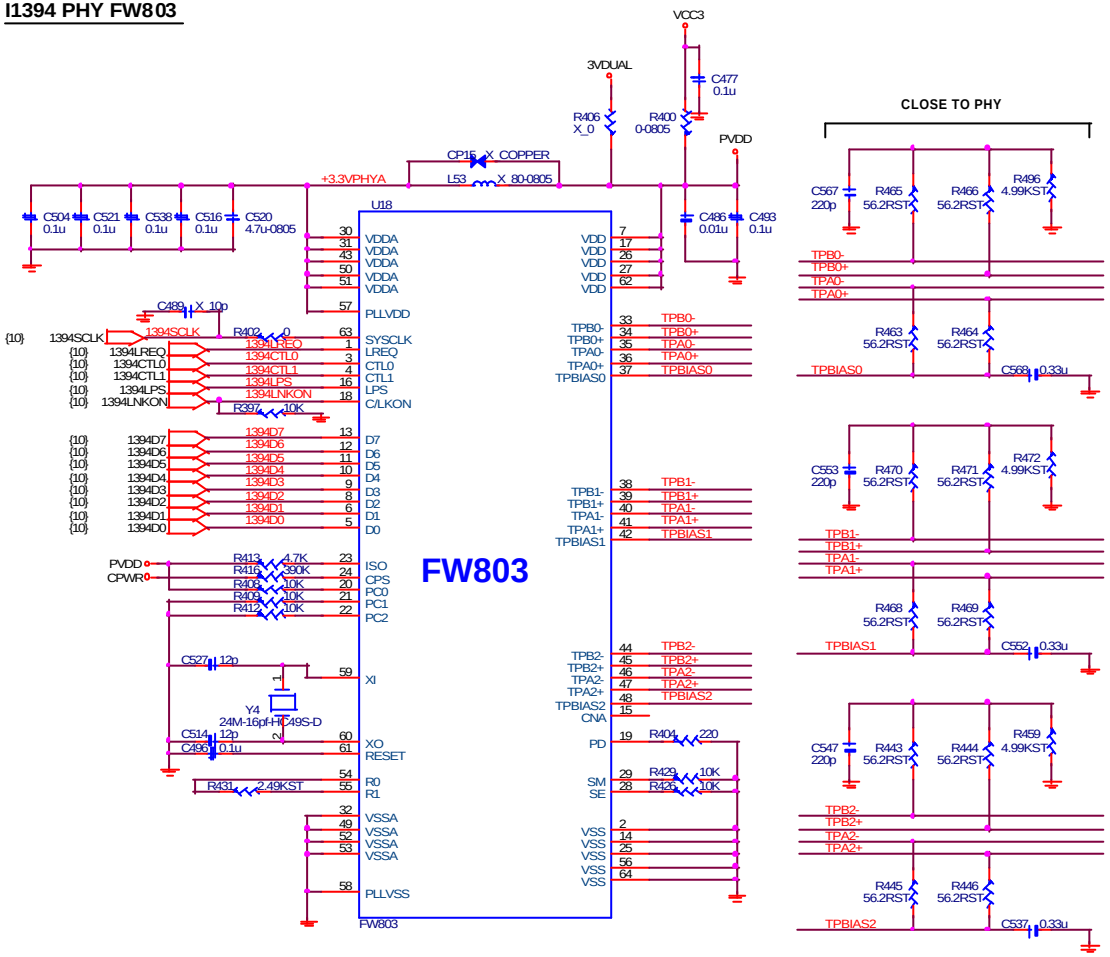

FRONT PANEL I1394 CONNECTORS

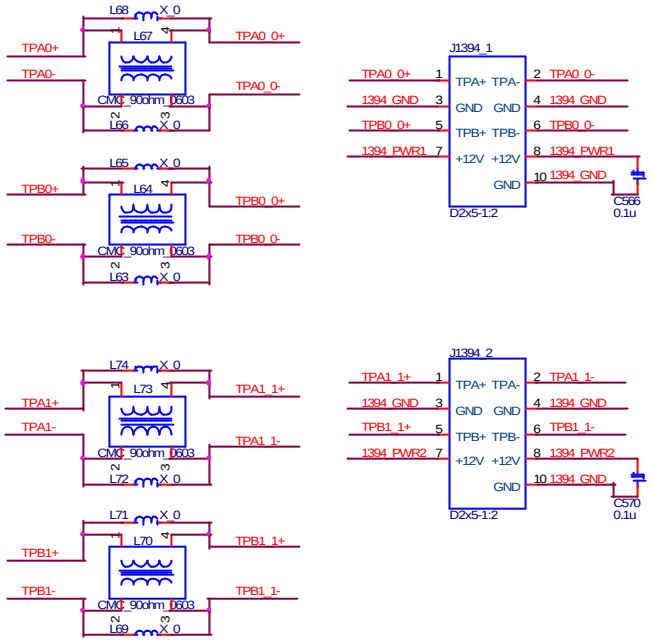

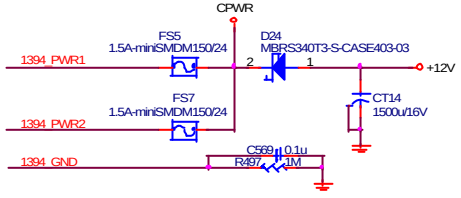

REAR PANEL I1394_USB CONNECTOR

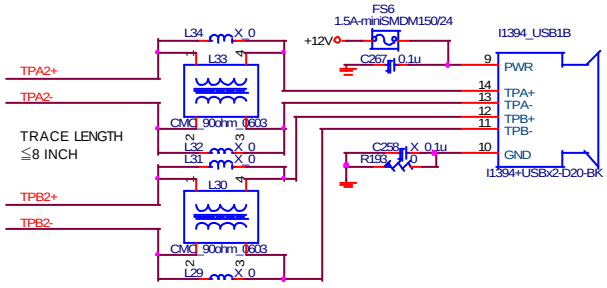

MICRO-STAR INt'L CO., LTD.

Title: FW803(1394 PHY) & Connectors

Size | Document Number: (MS-6595) | Rev: 0A

Date: Monday, July 08, 2002 | Sheet 19 of 25

ATX Connector

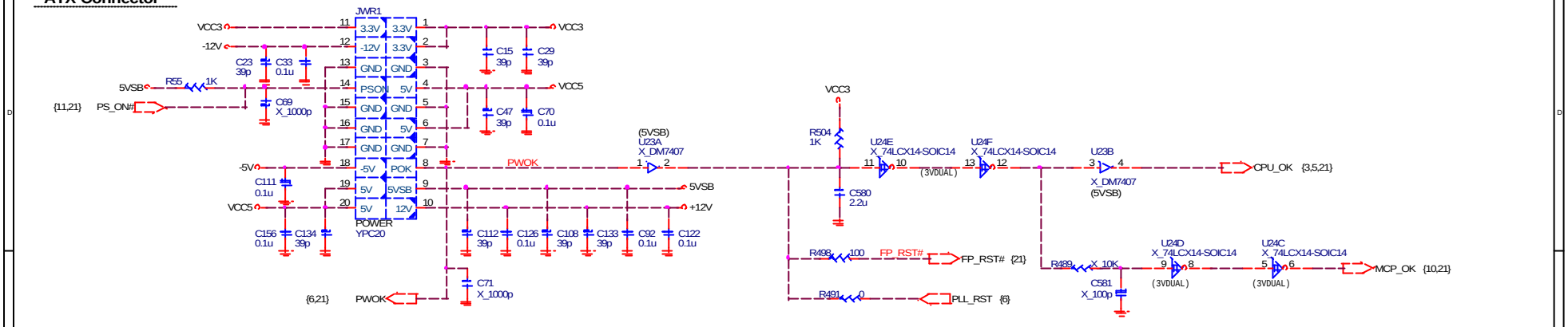

Front Panel

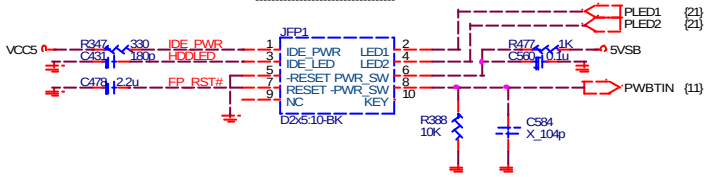

Simulation

Internal Ring Wake Up Block

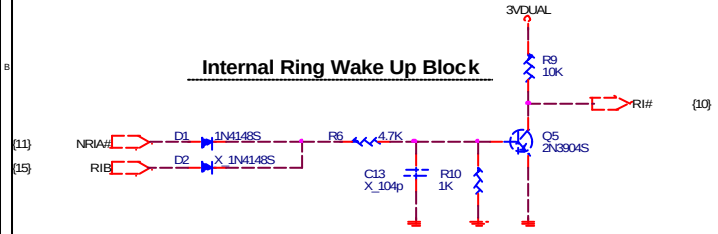

BUZZER

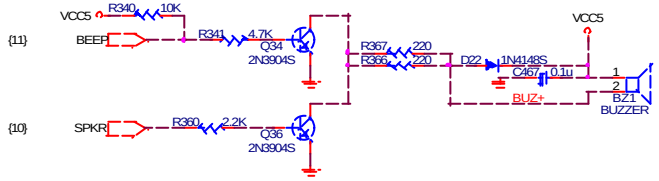

UNUSE LOGIC

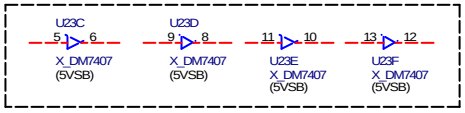

RSMRST#

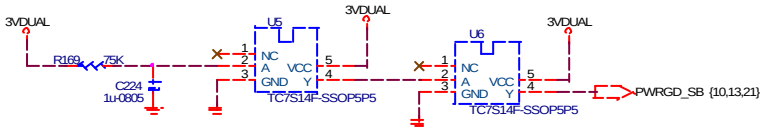

IDE LED

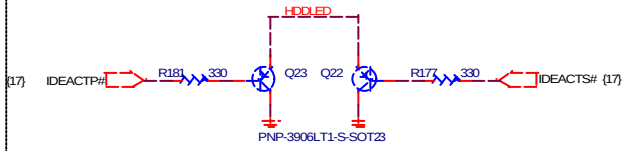

MICRO-STAR INt'L CO., LTD.

Title: ATX Connector & Front Panel

Size | Document Number: (MS-6595) | Rev: 0A

Date: Monday, July 08, 2002 | Sheet 20 of 25

ACPI (MS5)

SEL0	5VUSB
H	2 MOSFET
L	1 MOSFET

**S50# pin function(Hi level = 5V)
same as 5VUSB(Hi level = 12V)

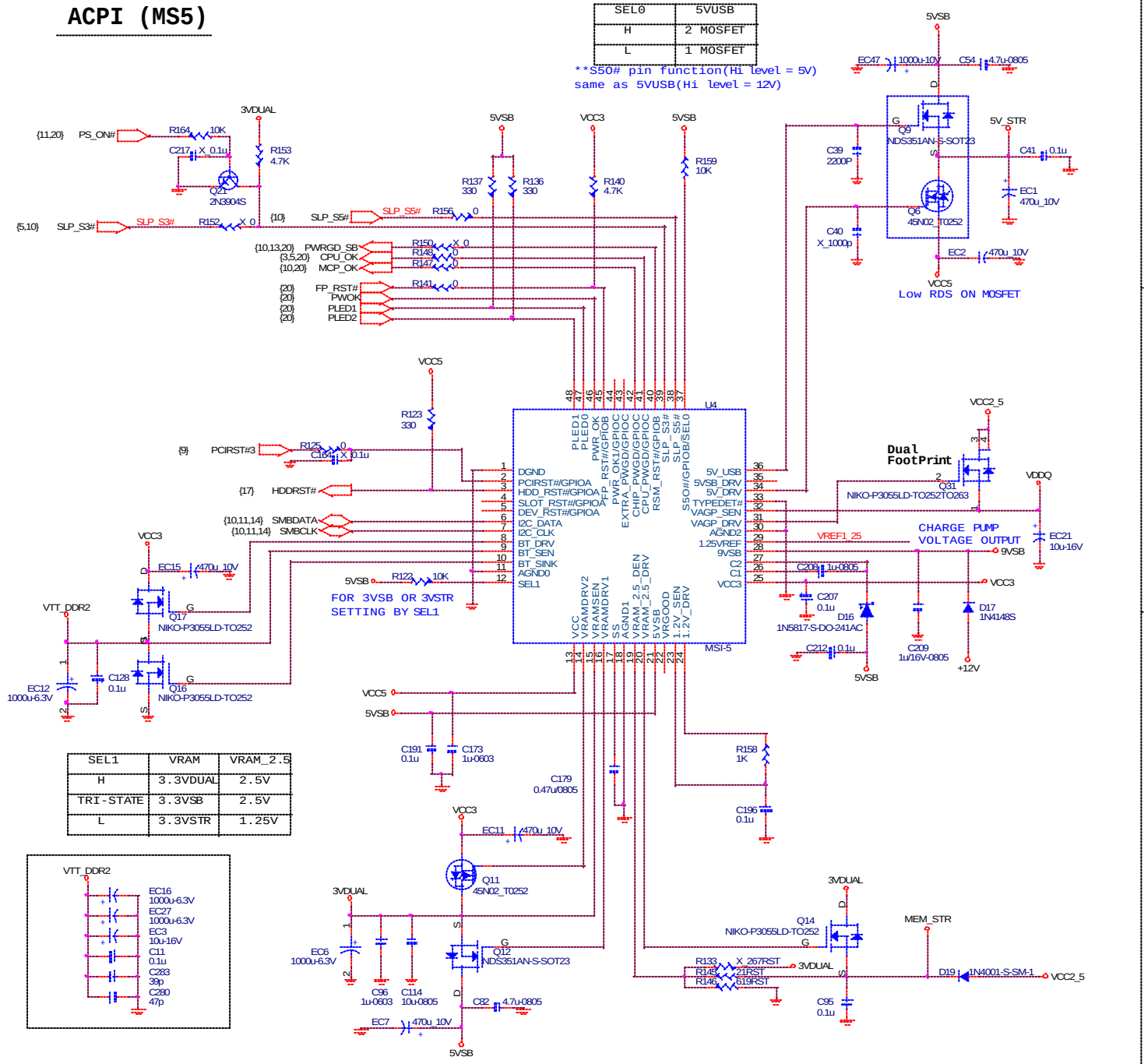

SEL1	VRAM	VRAM_2.5
H	3.3VDUAL	2.5V
TRI-STATE	3.3VSB	2.5V
L	3.3VSTR	1.25V

System Decoupling Capacitors

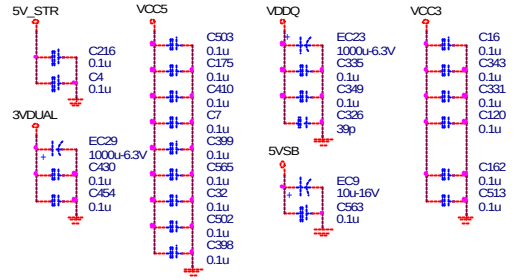

2.5V POWER TRANSLATOR

To DDR Clock Buffer

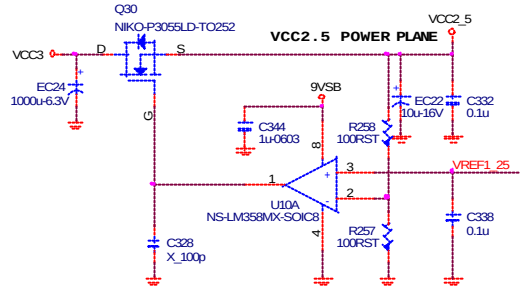

Discharge Residual Voltage

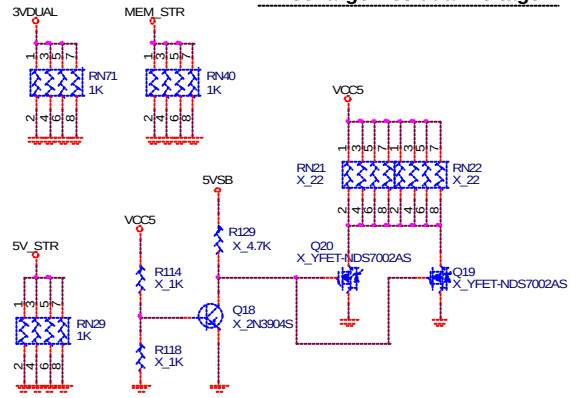

MICRO-STAR INt'L CO., LTD.

Title	System & DDR Regulators	
Size	Document Number (MS-6595)	Rev 0A
Date: Monday, July 08, 2002	Sheet 21 of 25	

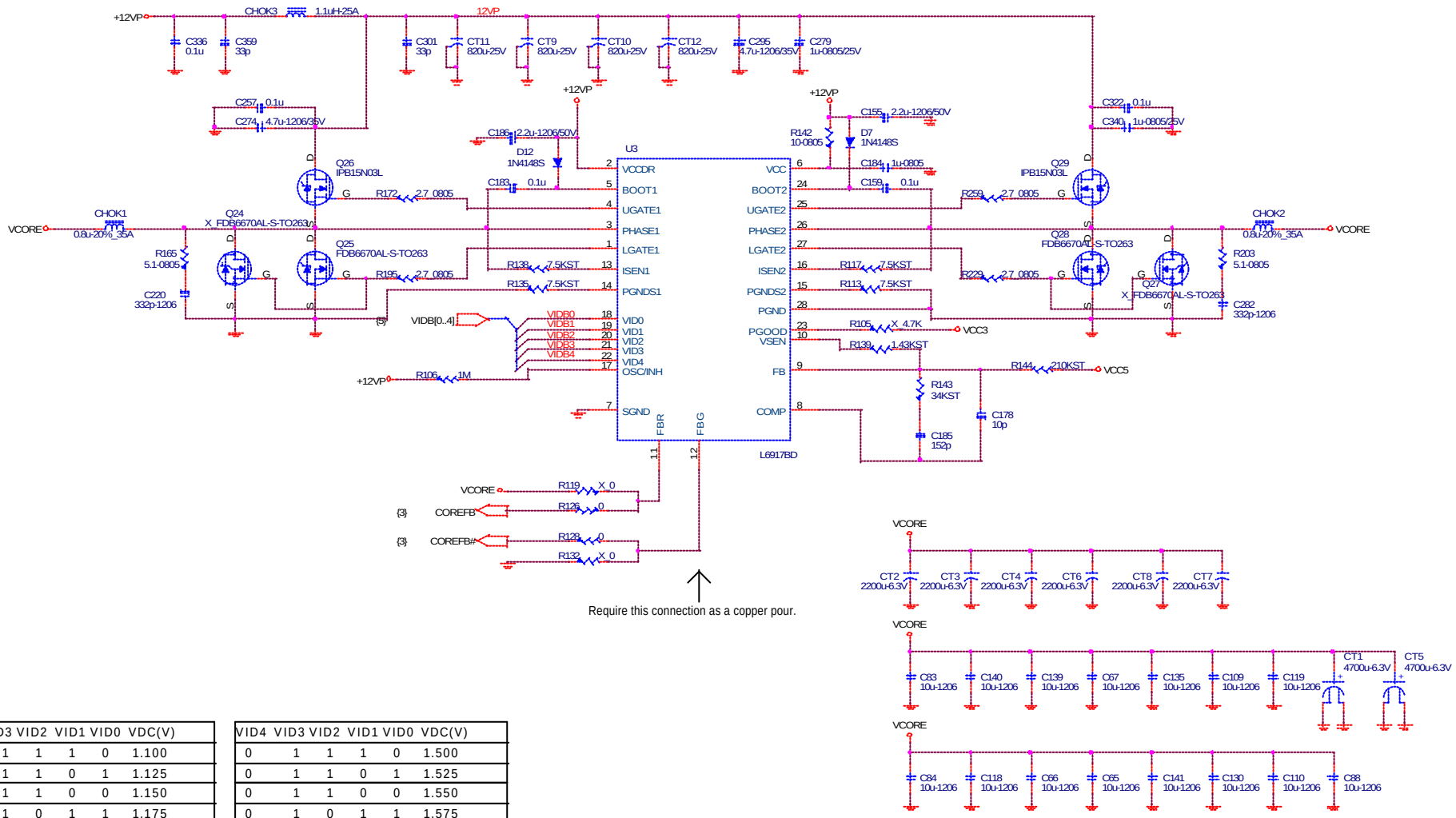

VID4	VID3	VID2	VID1	VID0	VDC(V)
1	1	1	1	0	1.100
1	1	1	0	1	1.125
1	1	1	0	0	1.150
1	1	0	1	1	1.175
1	1	0	1	0	1.200
1	1	0	0	1	1.225
1	1	0	0	0	1.250
1	0	1	1	1	1.275
1	0	1	1	0	1.300
1	0	1	0	1	1.325
1	0	1	0	0	1.350
1	0	0	1	1	1.375
1	0	0	1	0	1.400
1	0	0	0	1	1.425
1	0	0	0	0	1.450
0	1	1	1	1	1.475

VID4	VID3	VID2	VID1	VID0	VDC(V)
0	1	1	1	0	1.500
0	1	1	0	1	1.525
0	1	1	0	0	1.550
0	1	0	1	1	1.575
0	1	0	1	0	1.600
0	1	0	0	1	1.625
0	1	0	0	0	1.650
0	0	1	1	1	1.675
0	0	1	1	0	1.700
0	0	1	0	1	1.725
0	0	1	0	0	1.750
0	0	0	1	1	1.775
0	0	0	1	0	1.800
0	0	0	0	1	1.825
0	0	0	0	0	1.850
1	1	1	1	1	OFF

ATX12V POWER CONNECTOR

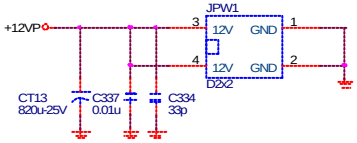

MICRO-STAR INt'L CO., LTD.

Title: VRM 9.0 - ST6917B

Size | Document Number: (MS-6595) | Rev: 0A

Date: Monday, July 08, 2002 | Sheet 22 of 25

MCP2

GPIO Pin	Type	Function
GPIO 0	I	PCI_REQ#4 (multifunction pin)
GPIO 1	O	PCI_GNT#4 (multifunction pin)
GPIO 2	I/O	PCI_PERR# (multifunction pin)
GPIO 3	I	PCI_IRQ#E (multifunction pin)
GPIO 4	I	MII_RXER (multifunction pin)
GPIO 5	I	Pull up through 8.2K ohms (LPC_DRQ#1)
GPIO 6	I	USB_OC1# (multifunction pin)
GPIO 7	I	USB_OC2# (multifunction pin)
GPIO 8	I	USB_OC2# (multifunction pin)
GPIO 9	I	USB_OC3# (multifunction pin)
GPIO 10	I	USB_OC3# (multifunction pin)
GPIO 11	O	AC_SDIN1 (multifuntion pin)
GPIO 12	I	A20GATE (multifuntion pin)
GPIO 13	I	Pull up through 10K ohms (SPDIF)
GPIO 14	I/O	Unused
GPIO 15	I/O	B_SEL0
GPIO 16	I/O	B_SEL1
GPIO 17		Reserve
GPIO 18	I/O	Unused
GPIO 19	I	SIO_PME# (multifunction pin)
GPIO 20	O	SLP_S1# (multifunction pin)
GPIO 21	I	Pull up through 4.7K ohms (SIO_SMI#)
GPIO 22	I	THERM# (multifuntion pin)
GPIO 23	I	INTRUDER#
GPIO 24	I	RI# (multifuntion pin)
GPIO 25	I	KBRST# (multifuntion pin)
GPIO 26	O	SUSCLK (multifuntion pin)
GPIO 27	I	AGP_PME# (multifuntion pin)
GPIO 28	I	Primary IDE ATA66/100 detection (ATADET0)
GPIO 29	I	GPIO29 (Clear password indicator , Active Low)
GPIO 30	I	Secondary IDE ATA66/100 detection (ATADET1)
GPIO 31	I	GPIO31 (CMOS Clear , Active Low)
GPIO 32	O	Unused
GPIO 33	O	Unused
GPIO 34	O	Unused
GPIO 35	I	Unused
GPIO 36~38	I	Pull up through 10K ohms to 3VDUAL
GPIO 48	I	Pull up through 4.7K ohms to VCC3
GPIO 49	I	Pull up through 4.7K ohms to VCC3
SPIO 0	I/O	SM_CLK0 (multifuntion pin)
SPIO 1	I/O	SM_DATA0 (multifuntion pin)
SPIO 2	I/O	SM_CLK1 (multifuntion pin)
SPIO 3	I/O	SM_DATA1 (multifuntion pin)
SPIO 4	I/O	DDC_CLK (multifuntion pin)
SPIO 5	I/O	DDC_DATA (multifuntion pin)
SPIO 6	I	Pull up through 4.7K ohms (SMB_ALERT#)

PCI Config.

DEVICE	MCP1 INT Pin	REQ#/GNT#	IDSEL	CLOCK	CLK GEN PIN OUT
PCI Slot 1	INTA# INTB# INTC# INTD#	PCI_REQ#0 PCI_GNT#0	AD22	PCICLK0	MCP/AB20 (PCI_CLK0)
PCI Slot 2	INTD# INTA# INTB# INTC#	PCI_REQ#1 PCI_GNT#1	AD23	PCICLK1	MCP/AB18 (PCI_CLK1)
PCI Slot 3	INTC# INTD# INTA# INTB#	PCI_REQ#2 PCI_GNT#2	AD24	PCICLK2	MCP/AB12 (PCI_CLK2)

LPC Super I/O

GPIO Pin	Type	Function
GPIO 10	O	MB_ID2
GPIO 11	O	Unused
GPIO 12	O	Unused
GPIO 13	O	Unused
GPIO 14	O	MB_ID0
GPIO 15	O	MB_ID1
GPIO 16	O	Unused
GPIO 17	O	MB_ID3
GPIO 20	O	Unused
GPIO 21	I	SMBCLK
GPIO 22	I/O	SMBDATA
GPIO 23	O	Unused
GPIO 24	O	Unused
GPIO 25	I	BIOS Protect , Active Low
GPIO 26	O	Unused
GPIO 27	O	Floopy Driven Density Select , Active Low
GPIO 30	I	SLP_S3#
GPIO 31	O	PS_ON#
GPIO 32	O	Unused
GPIO 33	O	Unused
GPIO 34	O	PWR_FAN , High to turn ON FAN
GPIO 35	O	Unused

Flash ROM

GPIO Pin	Type	Function
GPI 0	I	Pull down through 1K ohms (unused)
GPI 1	I	Pull down through 1K ohms (unused)
GPI 2	I	Pull down through 1K ohms (unused)
GPI 3	I	Pull down through 1K ohms (unused)
GPI 4	I	Pull down through 1K ohms (unused)

DDR DIMM Config.

DEVICE	ADDRESS	CLOCK
DIMM 2	1010010B	MCLK_A0/MCLK_A0# MCLK_A1/MCLK_A1# MCLK_A2/MCLK_A2#
DIMM 1	1010001B	MCLK_B0/MCLK_B0# MCLK_B1/MCLK_B1# MCLK_B2/MCLK_B2#

Power Delivery Map

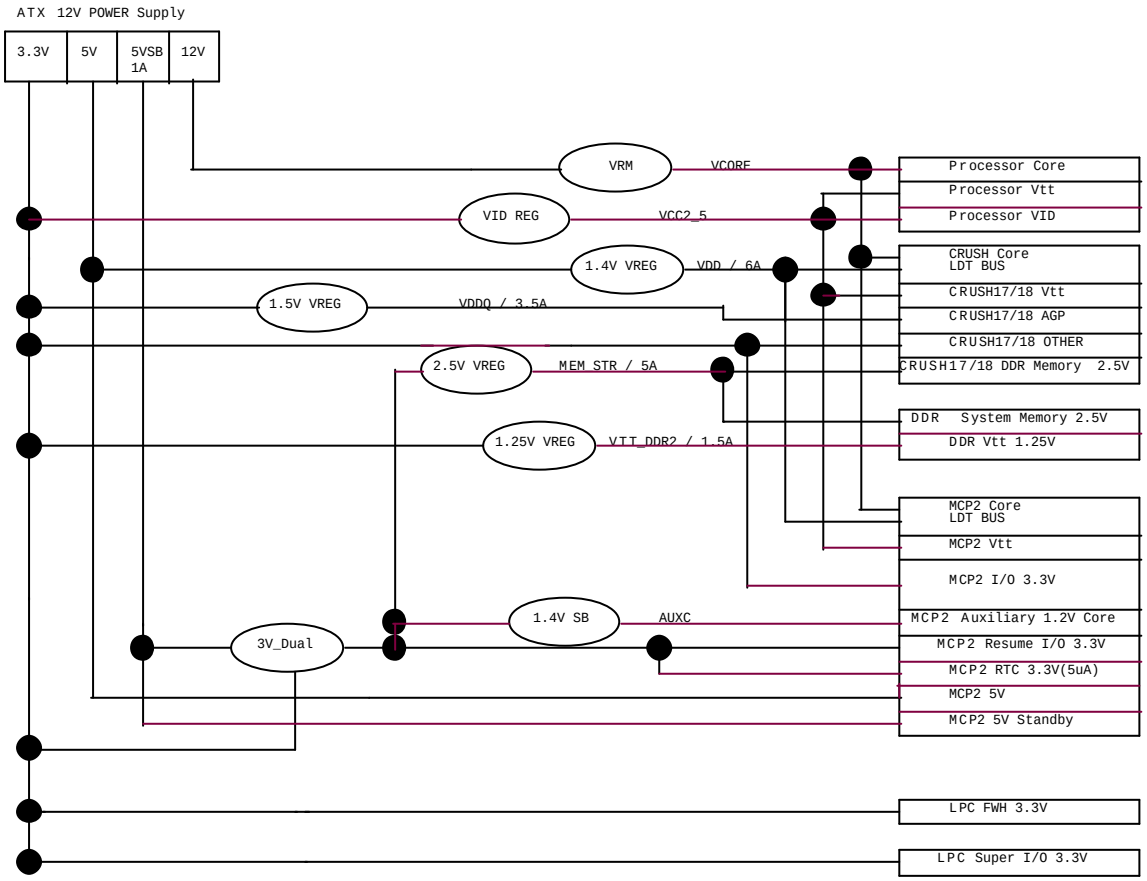

Mounting Holes

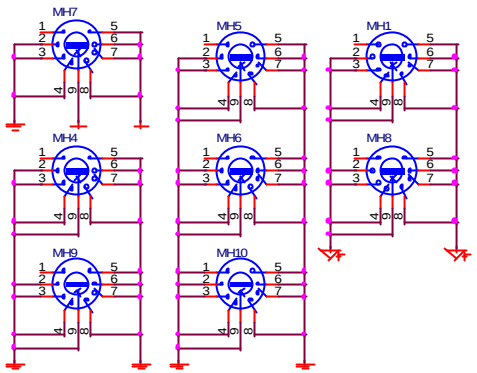

Location Reference Hold

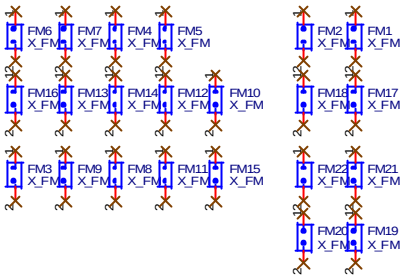

Auto-BOM Manual Parts

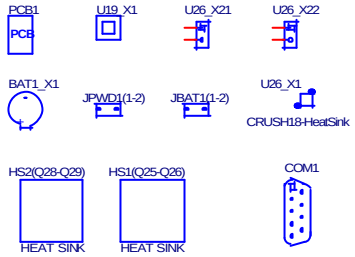

MSI	MICRO-STAR INt'L CO., LTD.	
Title	POWER DELIVERY MAP & MANUAL	
Size	Document Number (MS-6597)	Rev 0B
Date: Monday, July 08, 2002	Sheet 24 of 25	

MICRO-STAR INt'L CO., LTD.	
Title	REVISION HISTORY - 1
Size	Document Number (MS-6595) Rev 0A
Date: Monday, July 08, 2002	Sheet 25 of 25