Cover Sheet	1
Block Diagram	2
Clock CY28349 & ATA100 IDE Connector	3
mPGA478-B INTEL CPU Sockets	4 - 5
INTEL Brookdale-G GMCH -- North Bridge	6 - 8
INTEL ICH4 -- South Bridge	9 - 10
LPC I/O W83627HF-AW	11
AC'97 Codec and Audio Connector & Internal Speaker	12
FWH	13
DDR DIMMM1,2	14
DDR Damping & DDR Termination	15
AGP 4X SLOT (1.5V)	16
PCI SLOT 1 & 2 & 3	17
IO Connector	18
USB Connector	19
Front Panel & Connectors & FAN	20
ACPI Controller (MS-5)	21
L6719B CPU Power (PWM)-VRM9.0	22
Realtek RTL8101L LAN	23
VGA Connector	24
NEC 1394	25
Jumper Setting & Manual Parts	26
GPIO Definition	27-28
Power Delivery Map	29

MS-6577

Version 2.0C

INTEL (R) Brookdale-G Chipset
Willamette/Northwood 478pin mPGA-B Processor Schematics

CPU:

Willamette/Northwood mPGA-478B Processor

System Brookdale-G Chipset:

INTEL GMCH (North Bridge) +
INTEL ICH4 (South Bridge)

On Board Chipset:

BIOS -- FWH

LPC Super I/O -- W83627HF-AW

Clock Generator -- CY28349

AC'97 Codec -- RealTek AC202A/650

Onboard Lan Chipset -- RealTek RTL8101L

Onboard 1394 -- NEC PD72874

Expansion Slots:

AGP2.0 SLOT * 1

PCI2.2 SLOT * 3

Platform:

Micro ATX

MSI	MICRO-STAR	
Title	COVER SHEET	
Size	Document Number MS-6577	Rev 2.0C
Date: Friday, August 30, 2002	Sheet 1 of 26	

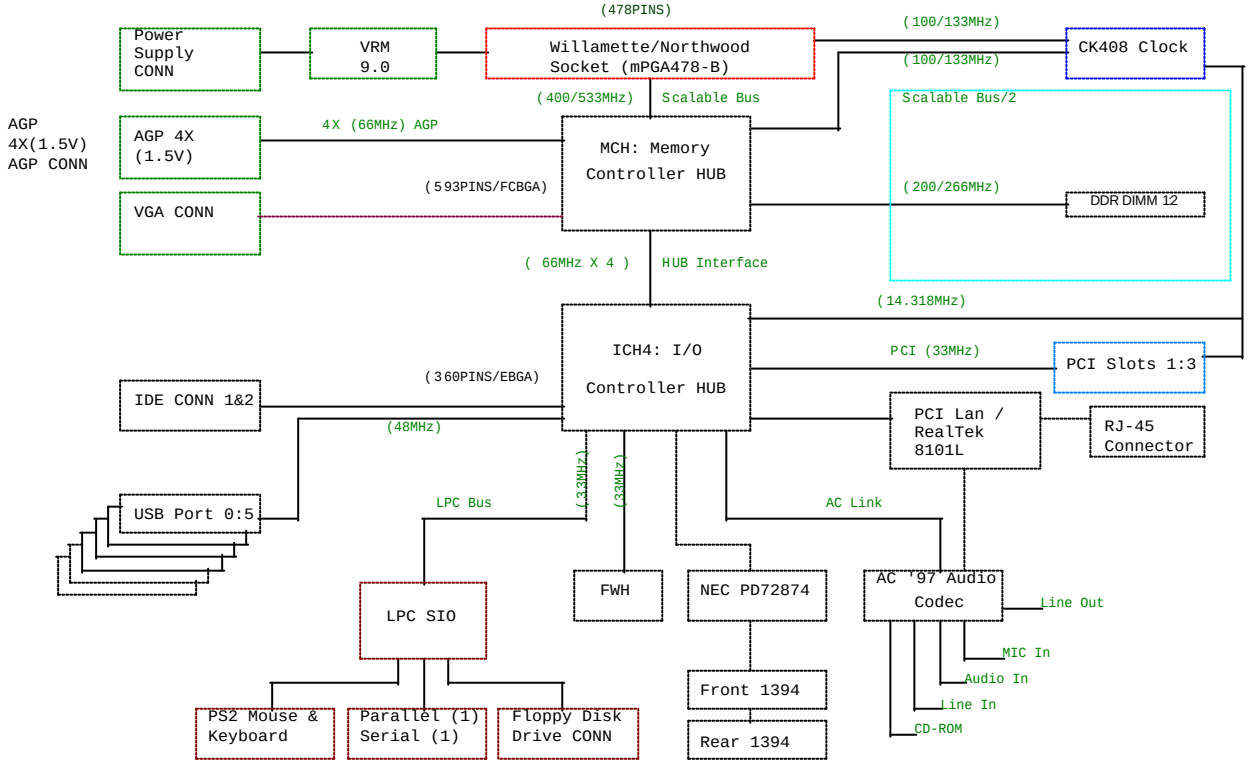

MICRO-STAR

Title: BLOCK DIAGRAM

Size | Document Number: MS-6577 | Rev: 2.0C

Date: Friday, August 30, 2002 | Sheet 2 of 26

CLOCK GENERATOR BLOCK

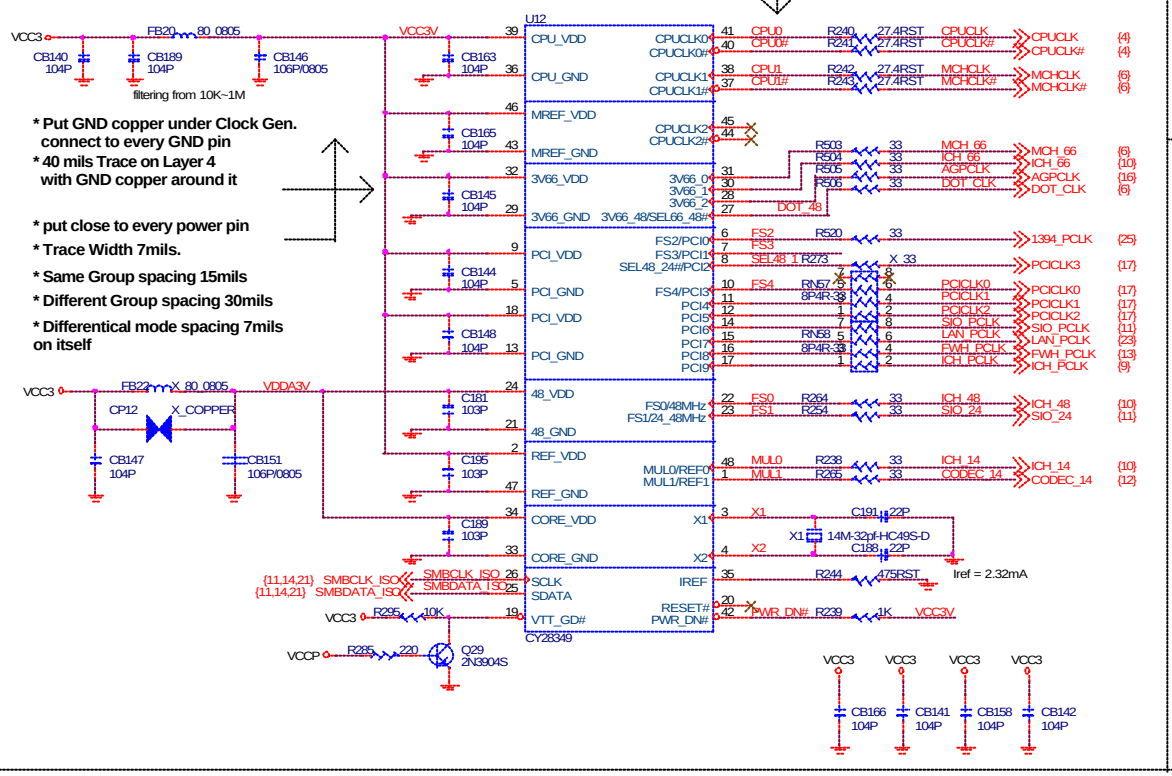

Shut Source Termination Resistors

CLOCK STRAPPING RESISTORS

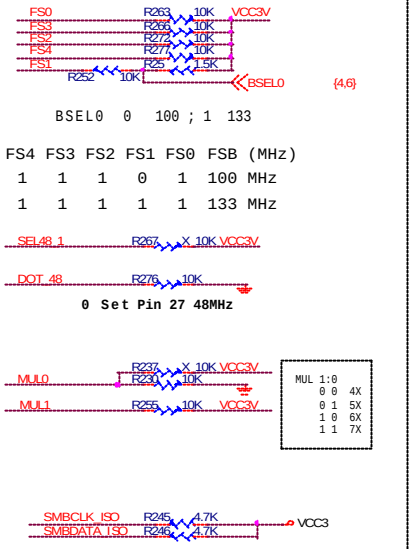

Pull-Down Capacitors

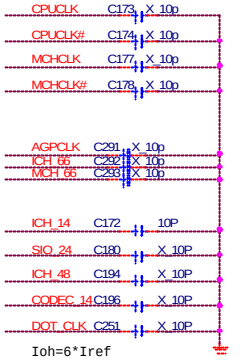

PRIMARY IDE BLOCK

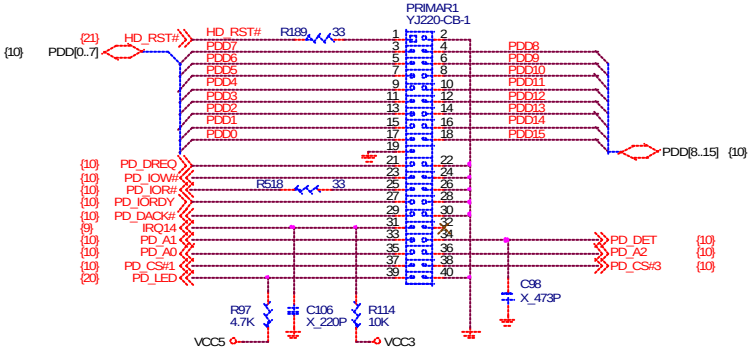

SECONDARY IDE BLOCK

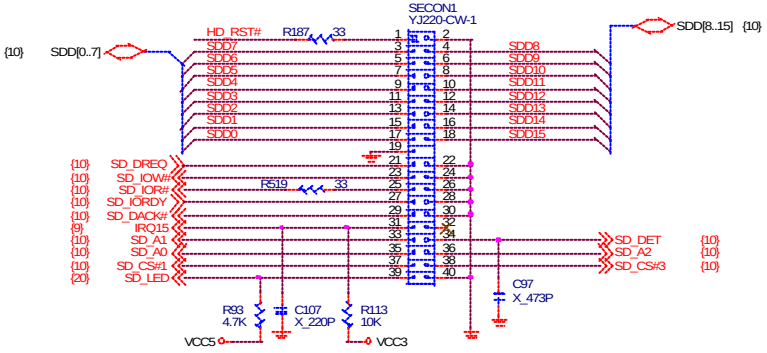

ATA100 IDE CONNECTORS

* Trace Width : 5mils
* Trace Spacing : 7mils
* Length(longest)-Length(shortest)<0.5"
* Trace Length less than5"

MICRO-STAR

Title	CLOCK GEN & ATA100 IDE
Size	
Document Number	MS-6577
Rev	2.0C
Date:	Friday, August 30, 2002
Sheet	3 of 26

CPU SIGNAL BLOCK

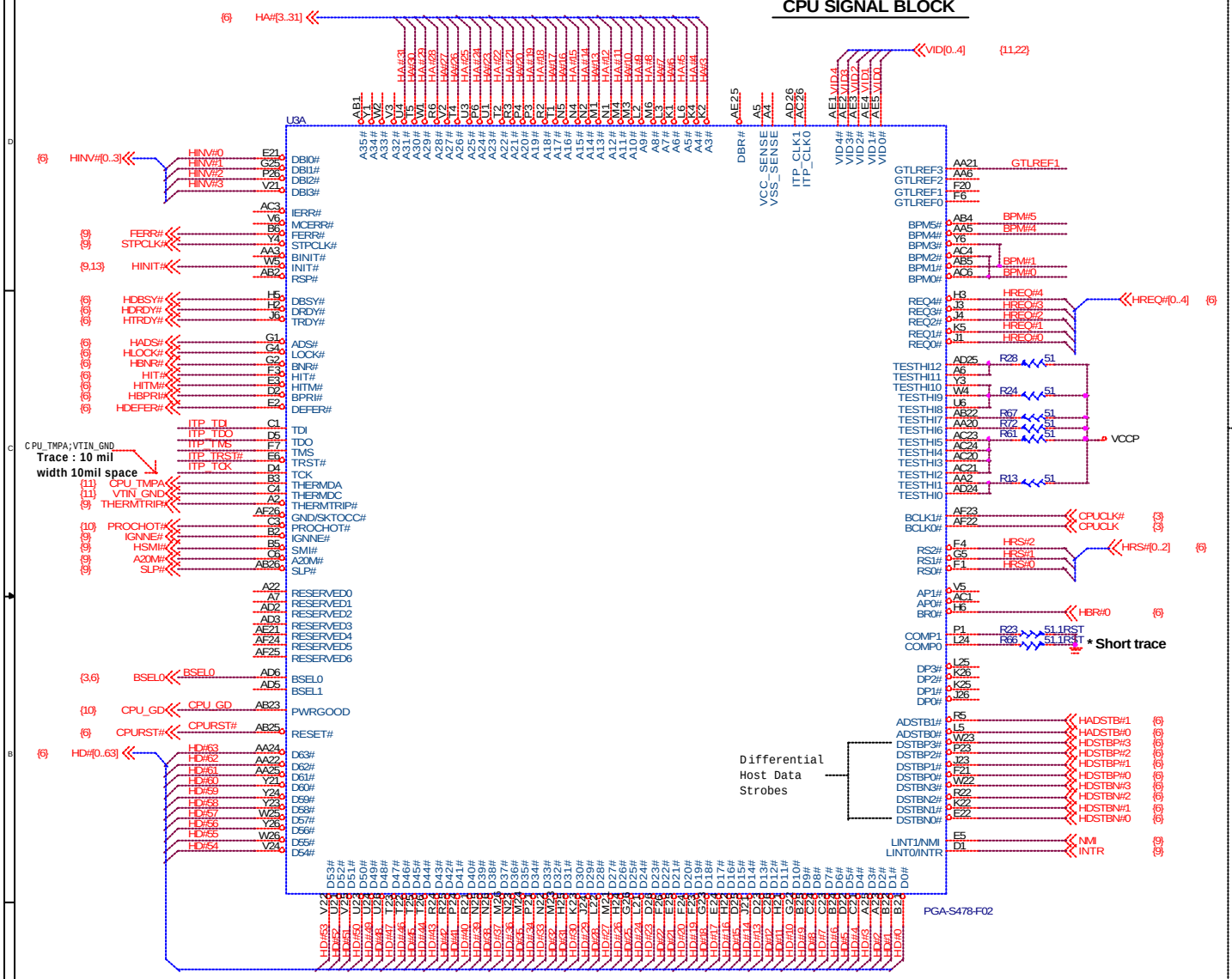

CPU GTL REFERNCE VOLTAGE BLOCK

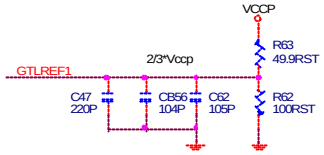

Every pin put one 220pF cap near it.

Trace Width 10mils, Space 15mils.

Keep the voltage dividers within 1.5 inches of the first GTLREF Pin

CPU ITP BLOCK

ALL COMPONENTS CLOSE TO CPU

CPU STRAPPING RESISTORS

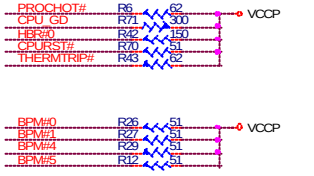

MICRO-STAR

Title: INTEL mPG478 CPU1

Size | Document Number: MS-6577 | Rev: 2.0C

Date: Friday, August 30, 2002 | Sheet 4 of 26

CPU VOLTAGE BLOCK

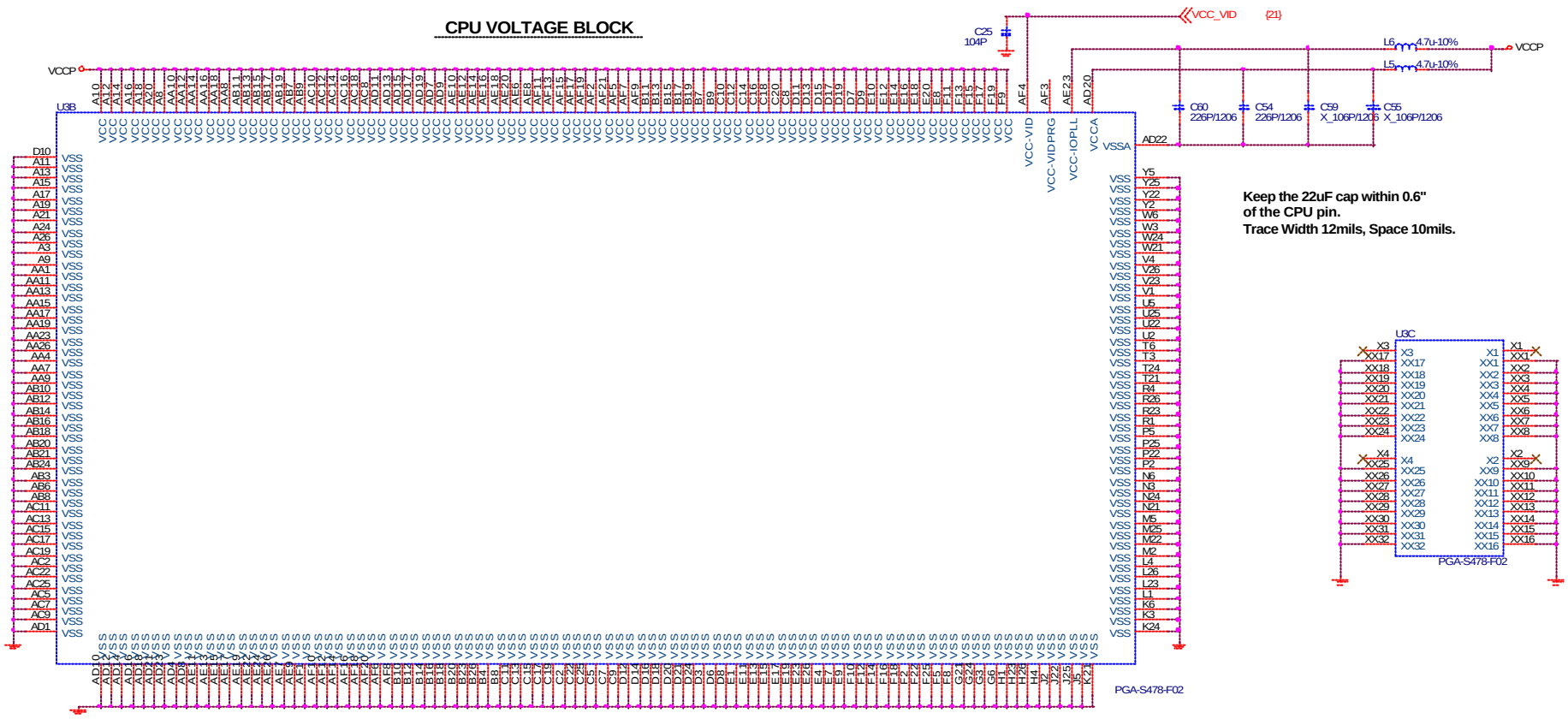

Keep the 22uF cap within 0.6" of the CPU pin.
Trace Width 12mils, Space 10mils.

CPU DECOUPLING CAPACITORS

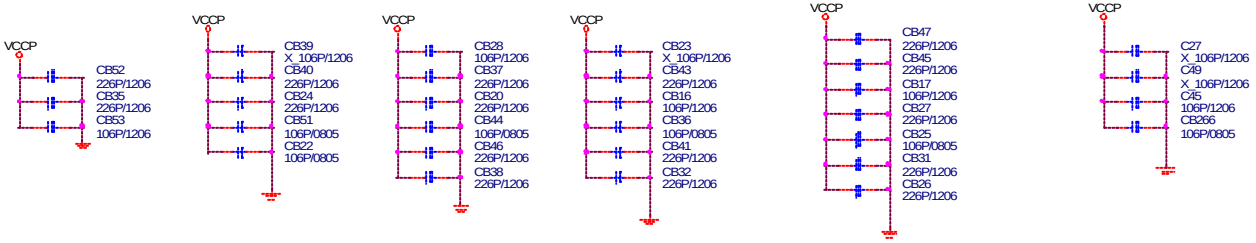

MICRO-STAR	
Title	INTEL mPGA478-B CPU2
Size	
Document Number	MS-6577
Rev	2.0C
Date: Friday, August 30, 2002	Sheet 5 of 26

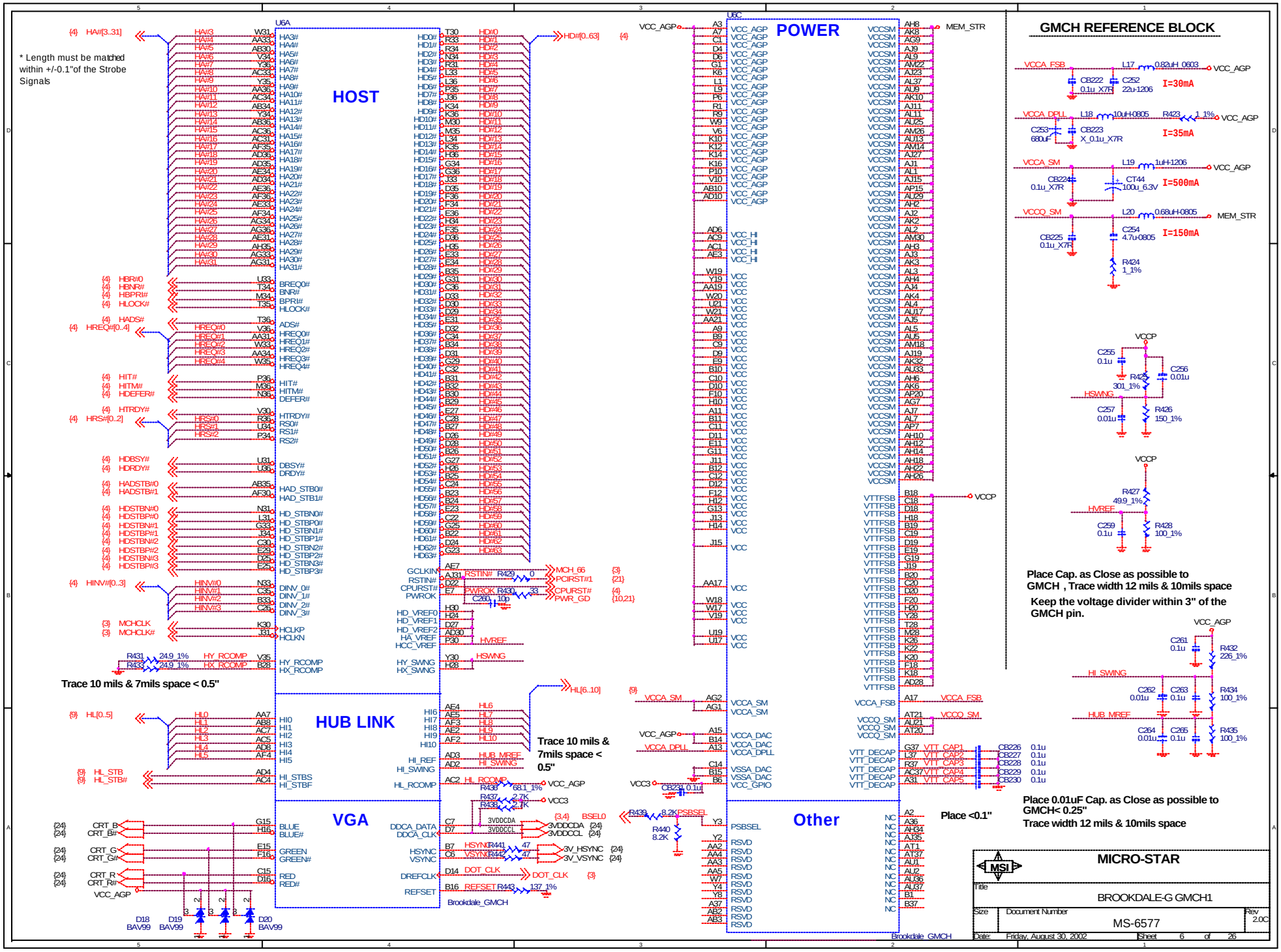
HOST
POWER
HUB LINK
VGA
Other
U6A
U6C
* Length must be matched within +/-0.1"of the Strobe Signals
Trace 10 mils & 7mils space < 0.5"
Trace 10 mils & 7mils space < 0.5"
Brookdale_GMCH
Brookdale_GMCH
GMCH REFERENCE BLOCK
I=30mA
I=35mA
I=500mA
I=150mA
Place Cap. as Close as possible to GMCH , Trace width 12 mils & 10mils space
Keep the voltage divider within 3" of the GMCH pin.
Place <0.1"
Place 0.01uF Cap. as Close as possible to GMCH< 0.25"
Trace width 12 mils & 10mils space
MICRO-STAR
BROOKDALE-G GMCH1
MS-6577
Friday, August 30, 2002
Sheet 6 of 26

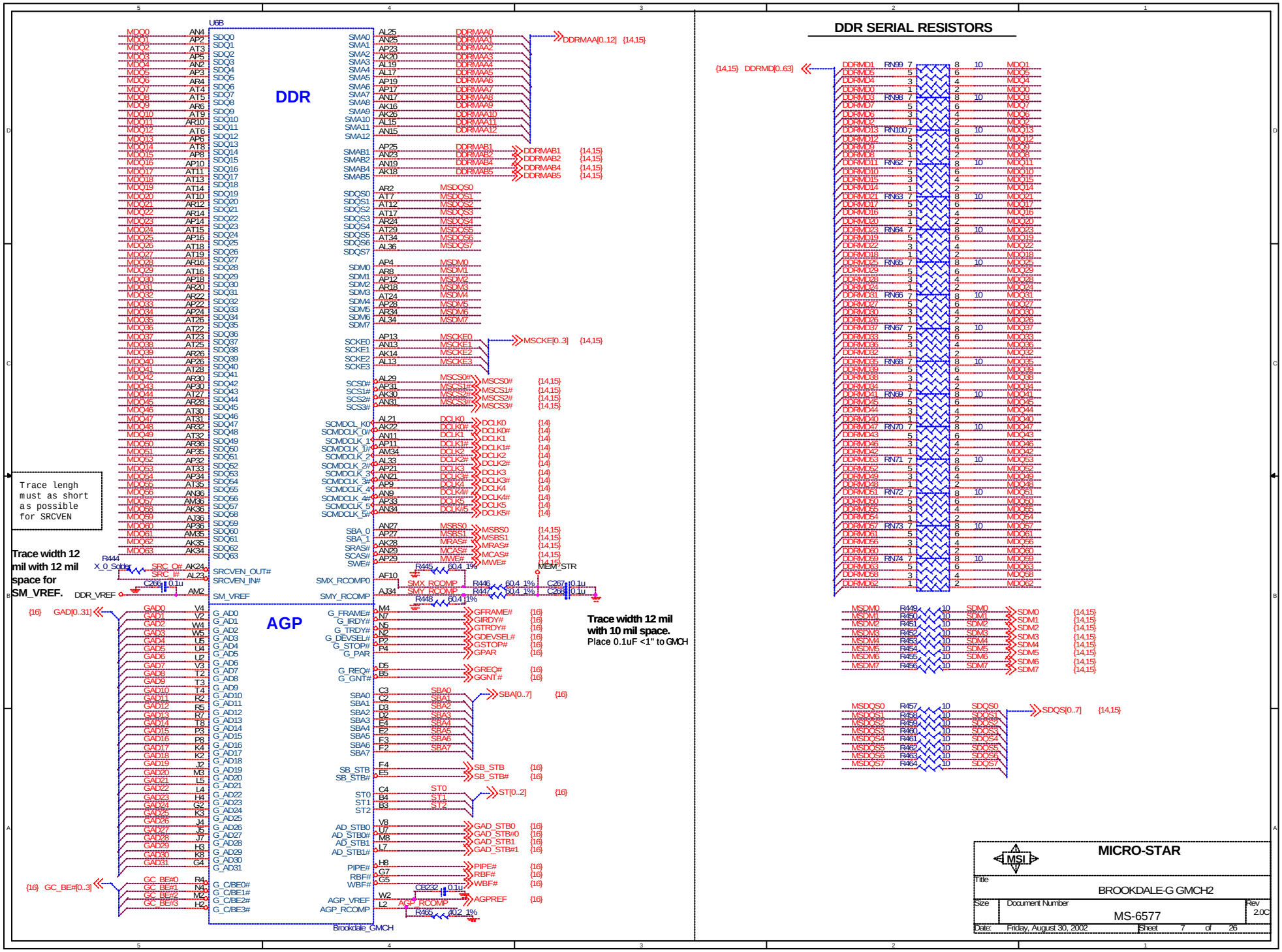
DDR SERIAL RESISTORS
U6B
DDR
AGP
Brookdale_GMCH
Trace lengh must as short as possible for SRCVEN
Trace width 12 mil with 12 mil space for SM_VREF.
Trace width 12 mil with 10 mil space.
Place 0.1uF <1" to GMCH
MICRO-STAR
BROOKDALE-G GMCH2
MS-6577
Rev 2.0C
Date: Friday, August 30, 2002
Sheet 7 of 26

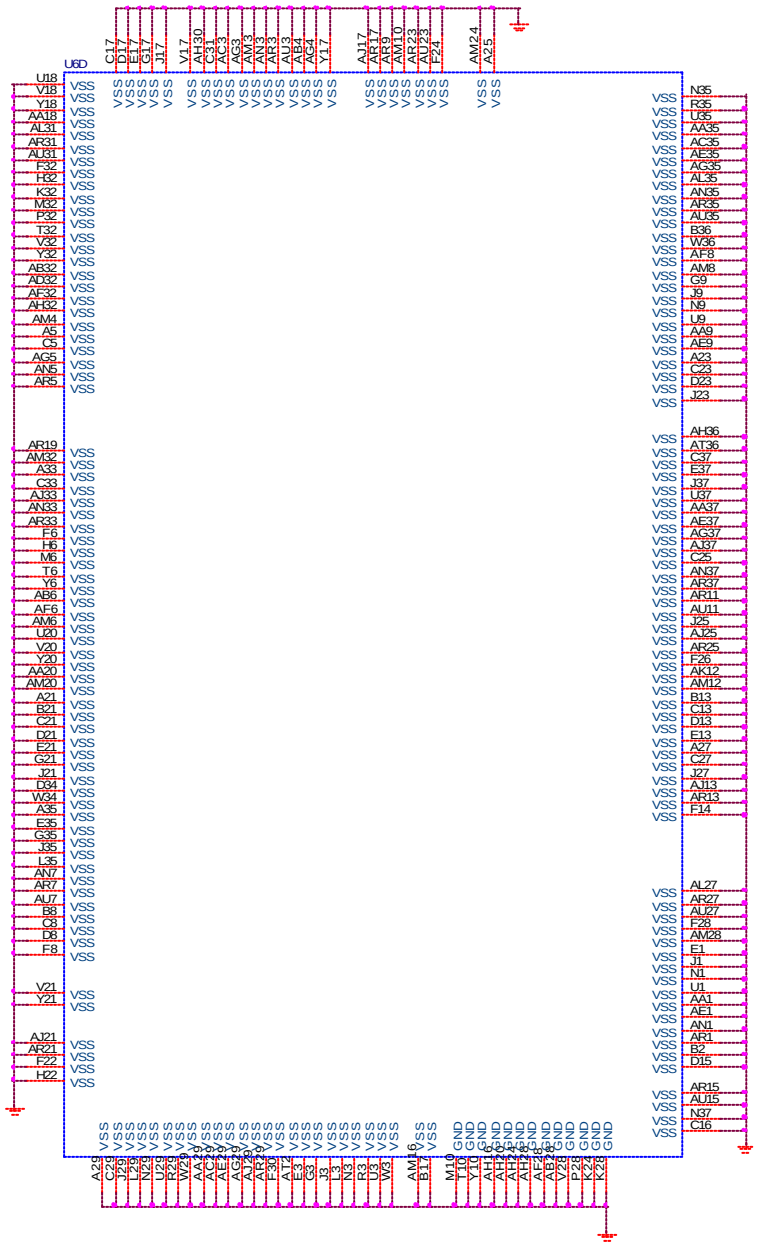

GMCH DECOUPLING CAPACITOR

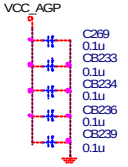

Pin A5
Pin J1
Pin E1
Pin N1
Pin U1

Place decoupling cap close to GMCH AGP Interface < 0.1"

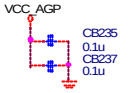

Pin AA1
Pin AE1

Place decoupling cap close to GMCH Hub-Link Interface< 0.1"

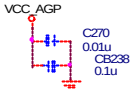

Pin B14
Pin A15

Place decoupling cap close to GMCH DAC Interface< 0.1"

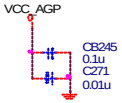

Place decoupling cap close to GMCH Core Logic Interface < 0.1"

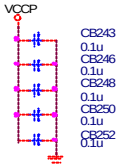

Place decoupling cap close to GMCH CPU Interface < 250mil in the Vtt corridor

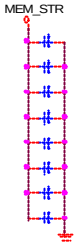

Pin AL37
Pin AU33
Pin AU29
Pin AU25
Pin AU17
Pin AU13
Pin AU9
Pin AU5

Place decoupling cap close to GMCH Memory Interface < 0.1", with 18 mil trach width

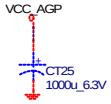

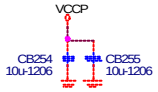

Place Bulk cap for Core Logic, AGP & Hub Link Interface

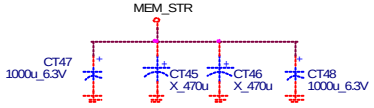

Place Bulk cap between GMCH & DIMM slot

MICRO-STAR

Title: Broodale-G GMCH3

Size | Document Number: MS-6577 | Rev 2.0C

Date: Friday, August 30, 2002 | Sheet 8 of 26

ICH4 PCI / HUB LINK / CPU / LAN / INTERRUPT SIGNALS

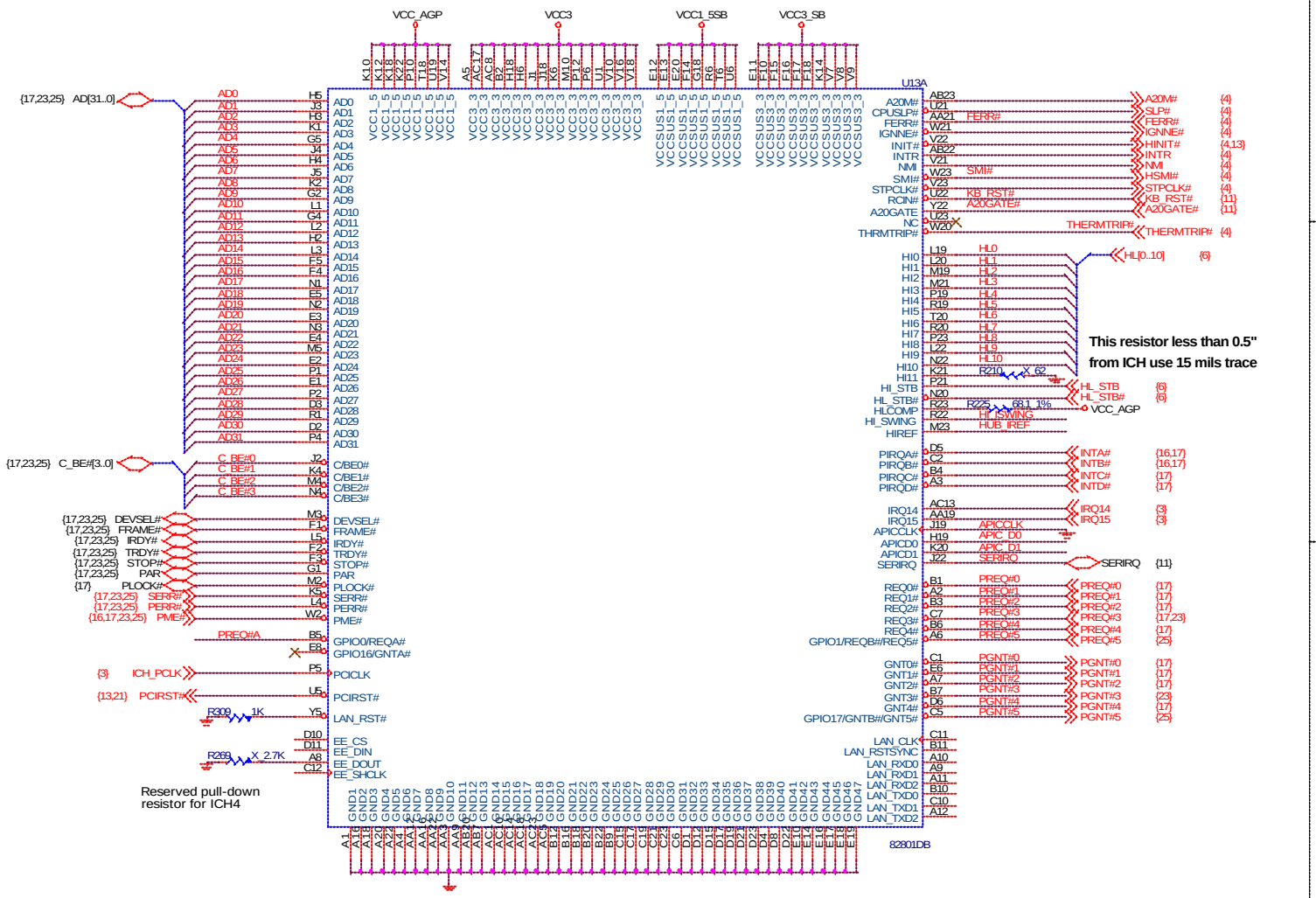

ICH4 PULL-UP/DOWN RESISTORS

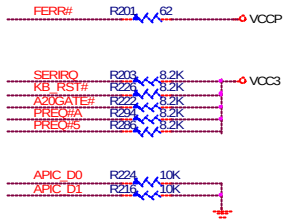

ICH4 REFERENCE VOLTAGE

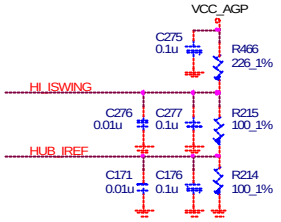

Place Cap. as Close as possible to ICH4 < 0.25"
Trace width use 12 mils and 10mils space

ICH4 DECOUPLING CAPACITORS

Place one 0.1u close to ICH4 <100 mil

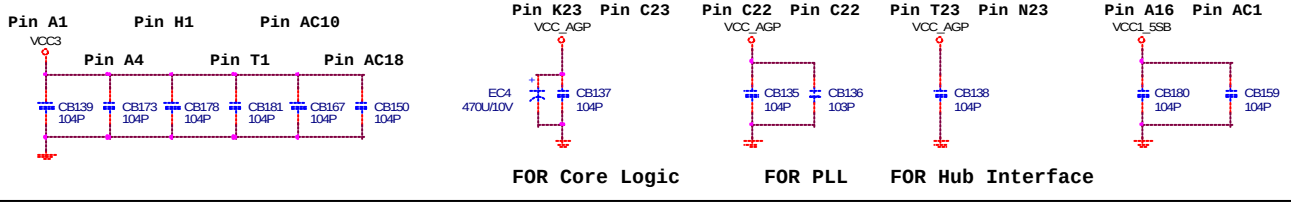

MICRO-STAR

Title: ICH4 PCI/HI/LAN

Size | Document Number: MS-6577 | Rev: 2.0C

Date: Friday, August 30, 2002 | Sheet 9 of 26

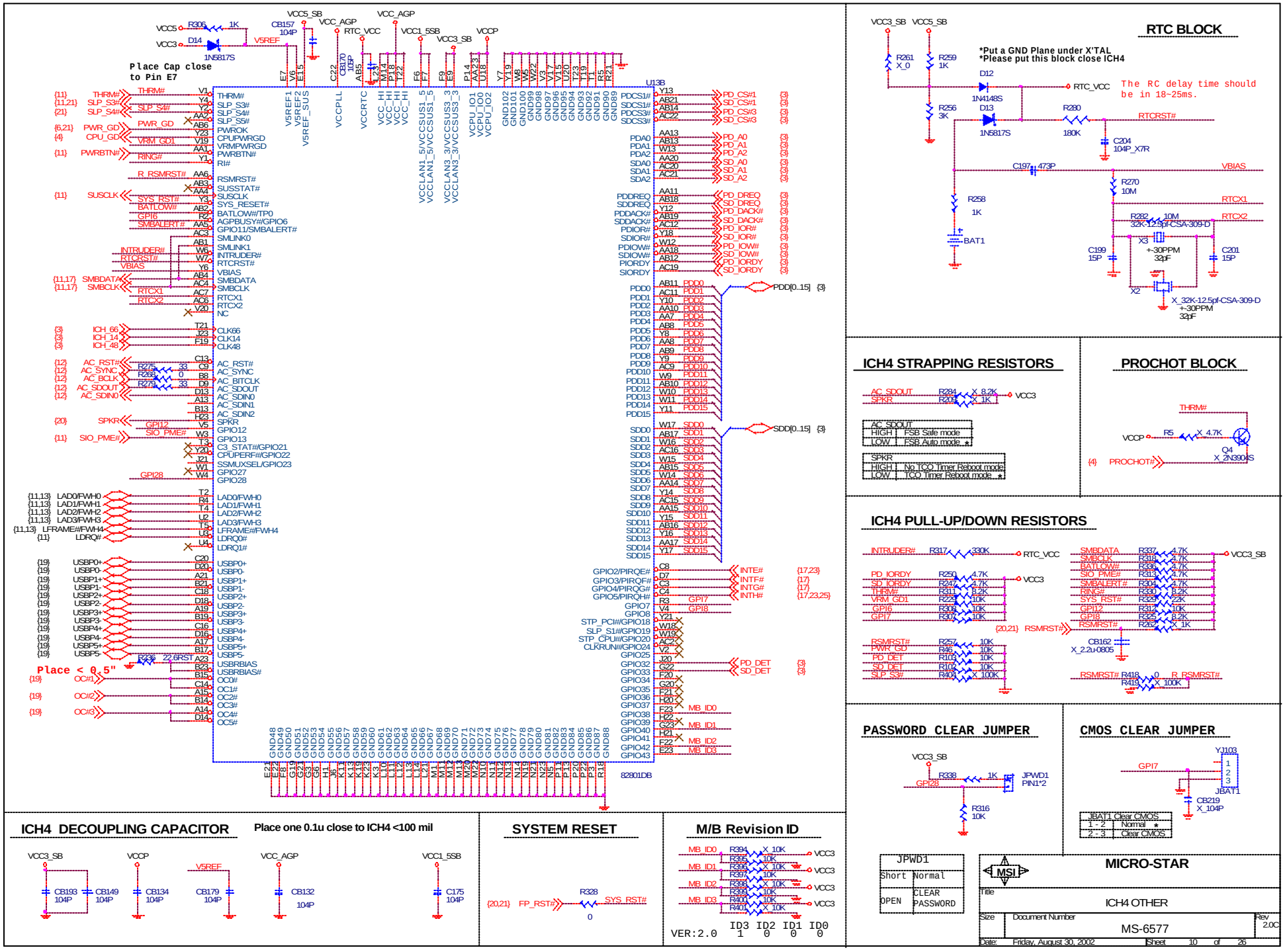
RTC BLOCK
*Put a GND Plane under X'TAL
*Please put this block close ICH4
The RC delay time should be in 18~25ms.
ICH4 STRAPPING RESISTORS
PROCHOT BLOCK
ICH4 PULL-UP/DOWN RESISTORS
PASSWORD CLEAR JUMPER
CMOS CLEAR JUMPER
Place Cap close to Pin E7
Place < 0.5"
U13B
82801DB
ICH4 DECOUPLING CAPACITOR
Place one 0.1u close to ICH4 <100 mil
SYSTEM RESET
M/B Revision ID
VER:2.0
ID3 ID2 ID1 ID0
1 0 0 0
MICRO-STAR
ICH4 OTHER
MS-6577
Rev 2.0C
Date: Friday, August 30, 2002
Sheet 10 of 26

LPC SUPER I/O W83627HF

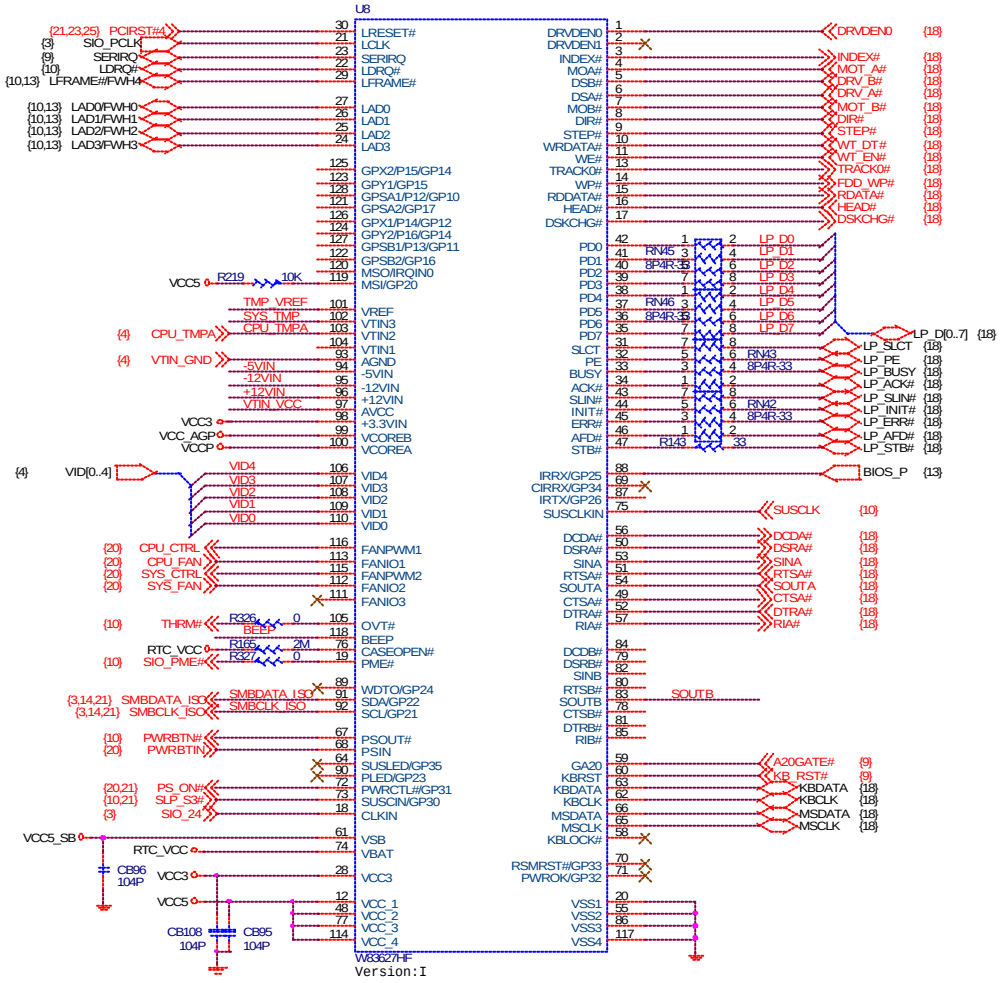

THERMAL RESISTOR BLOCK

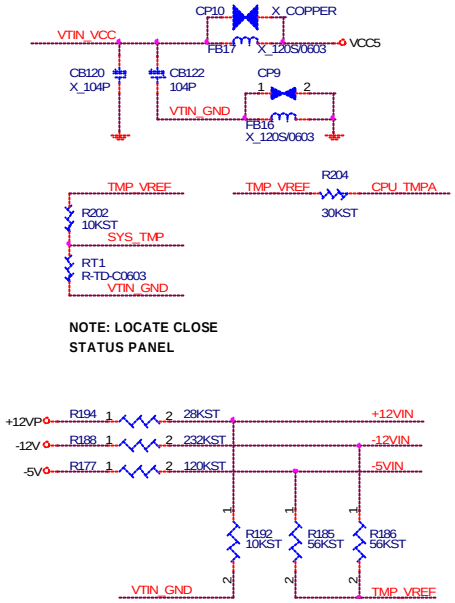

NOTE: LOCATE CLOSE STATUS PANEL

SPEAKER BLOCK

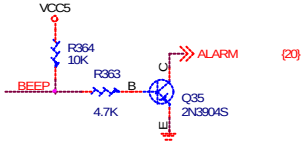

SMBus Isolation

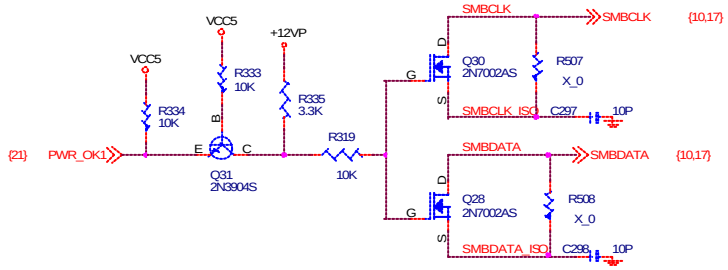

LPC I/O DECOUPLING CAPACITORS

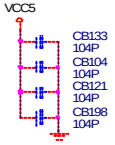

SUPER I/O STRAPPING RESISTOR

SOUTA	L: Disable KBC	H: Enable KBC
SOUTB	L: 24MHZ	H: 48MHZ
RTSA#	L: CFAD=2E	H: CFAD=4E
DTRA#	L: PNP Default	H: PNP no Default

MICRO-STAR

Title: LPC SUPER I/O

Size | Document Number: MS-6577 | Rev: 2.0C

Date: Friday, August 30, 2002 | Sheet 11 of 26

ALC650/202A/ADI1980 AC97 CODEC

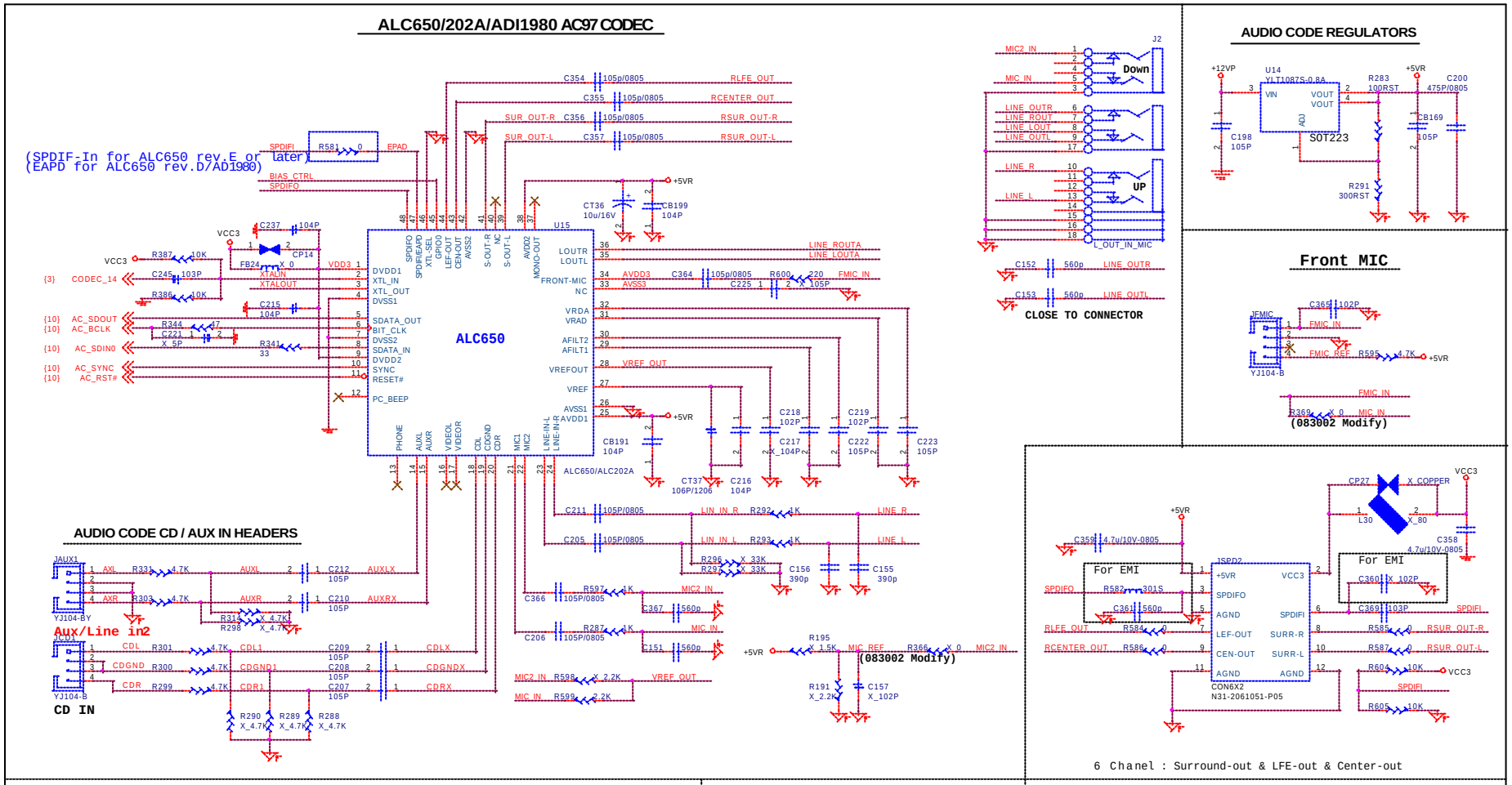

AUDIO CODE REGULATORS

Front MIC

Internal Speaker

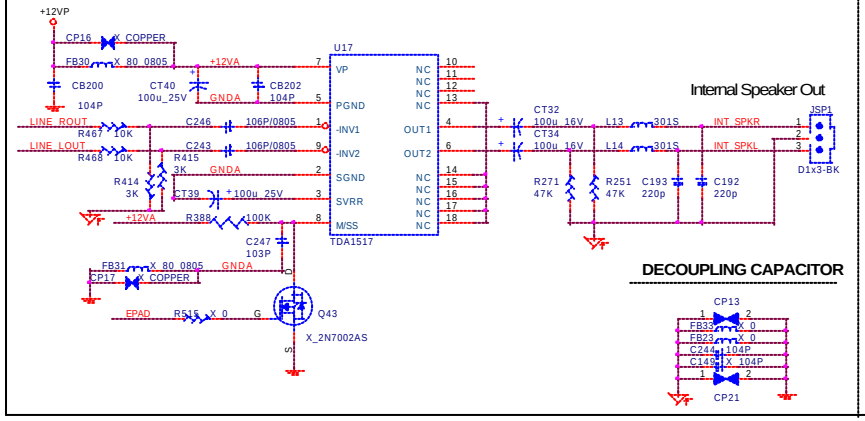

Speaker Out Decoupling

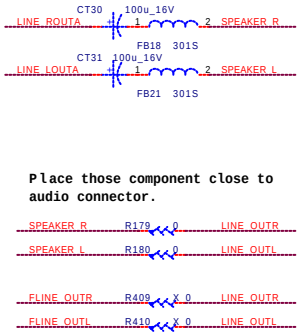

Intel Front Audio Connector

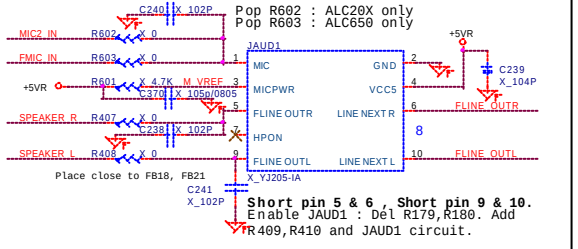

MICRO-STAR		
Title: AC'97 AUDIO		
Size	Document Number: MS-6577	Rev 2.0C
Date: Friday, August 30, 2002	Sheet 12 of 26	

Firware Hub (FWH)

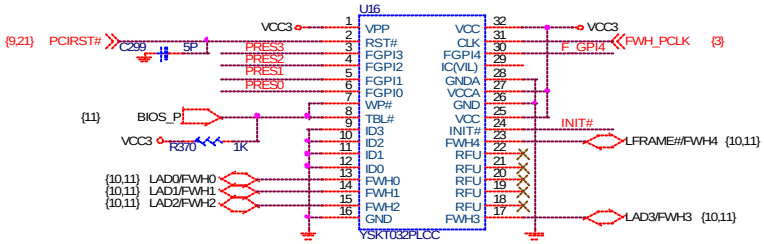

FWH RESISTORS

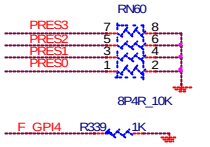

FWH DECOUPLING CAPACITORS

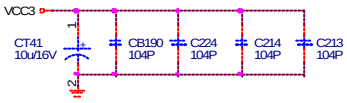

Place Cap. as Close to FWH< 350 mil

FWH INIT Signal Voltage Translation Block

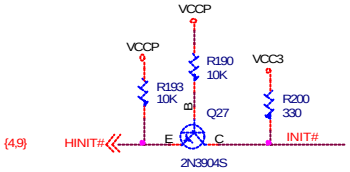

PCB Mounting Holes

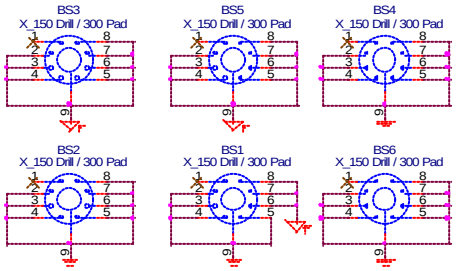

PCB Fiducials

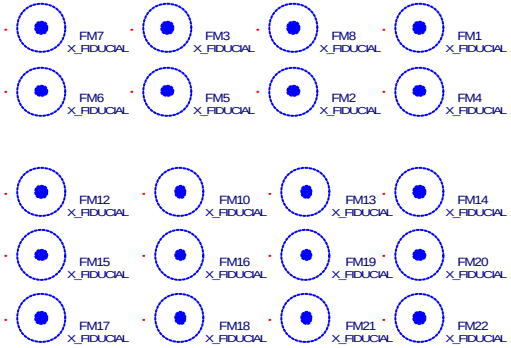

SIMULATION TRACE

MICRO-STAR		
Title	FWH	
Size	Document Number MS-6577	Rev 2.0C
Date: Friday, August 30, 2002	Sheet 13 of 26	

SYSTEM MEMORY

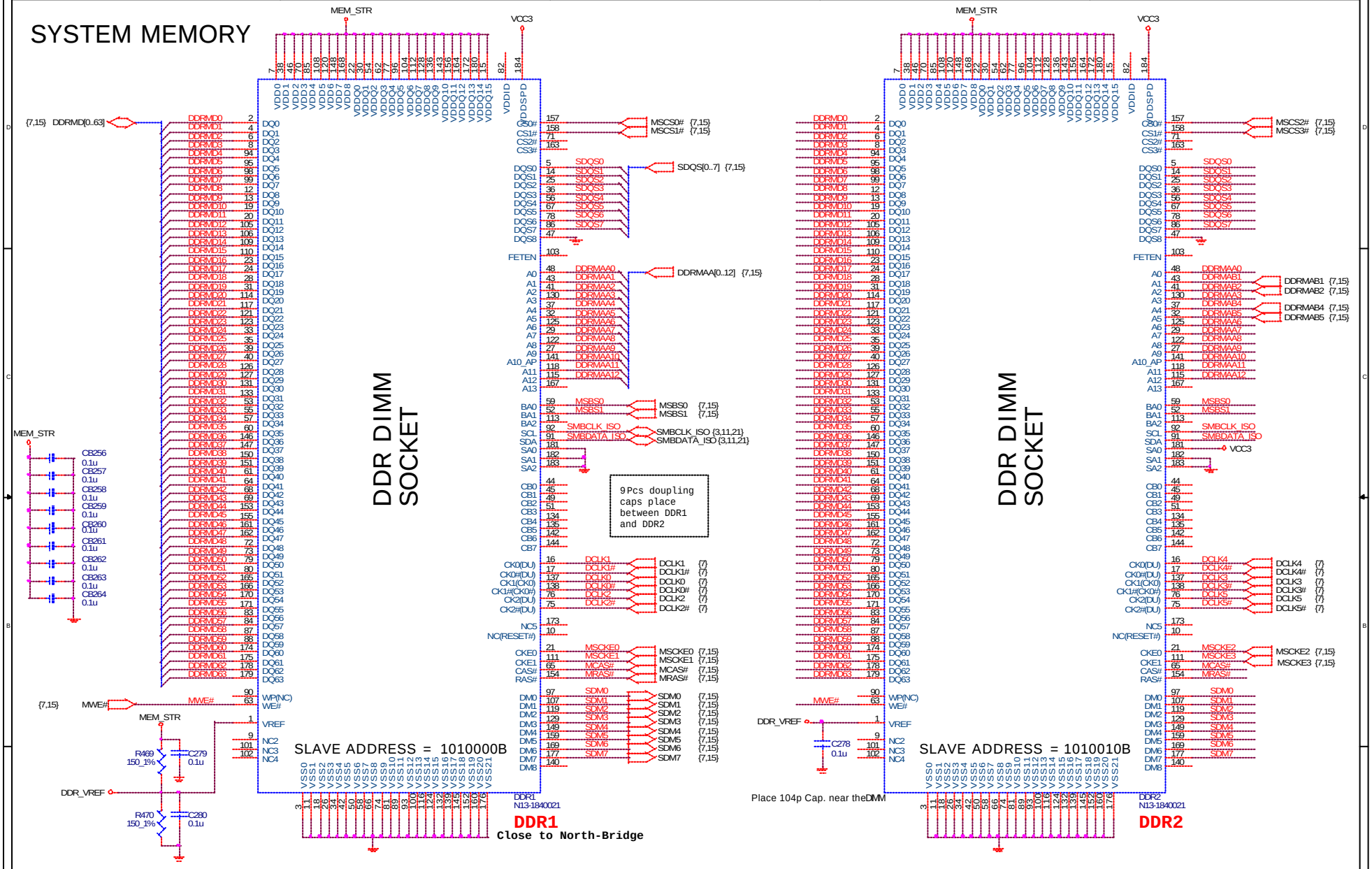

Keep the voltage divider within 1" of DIMM1.
Trace width 12 mil with 12 mil space.
Place 104p Cap. near theDIMM

MICRO-STAR

Title: DDR DIMM1 & 2

Size | Document Number: MS-6577 | Rev: 2.0C

Date: Friday, August 30, 2002 | Sheet 14 of 26

DDR TERMINATORS

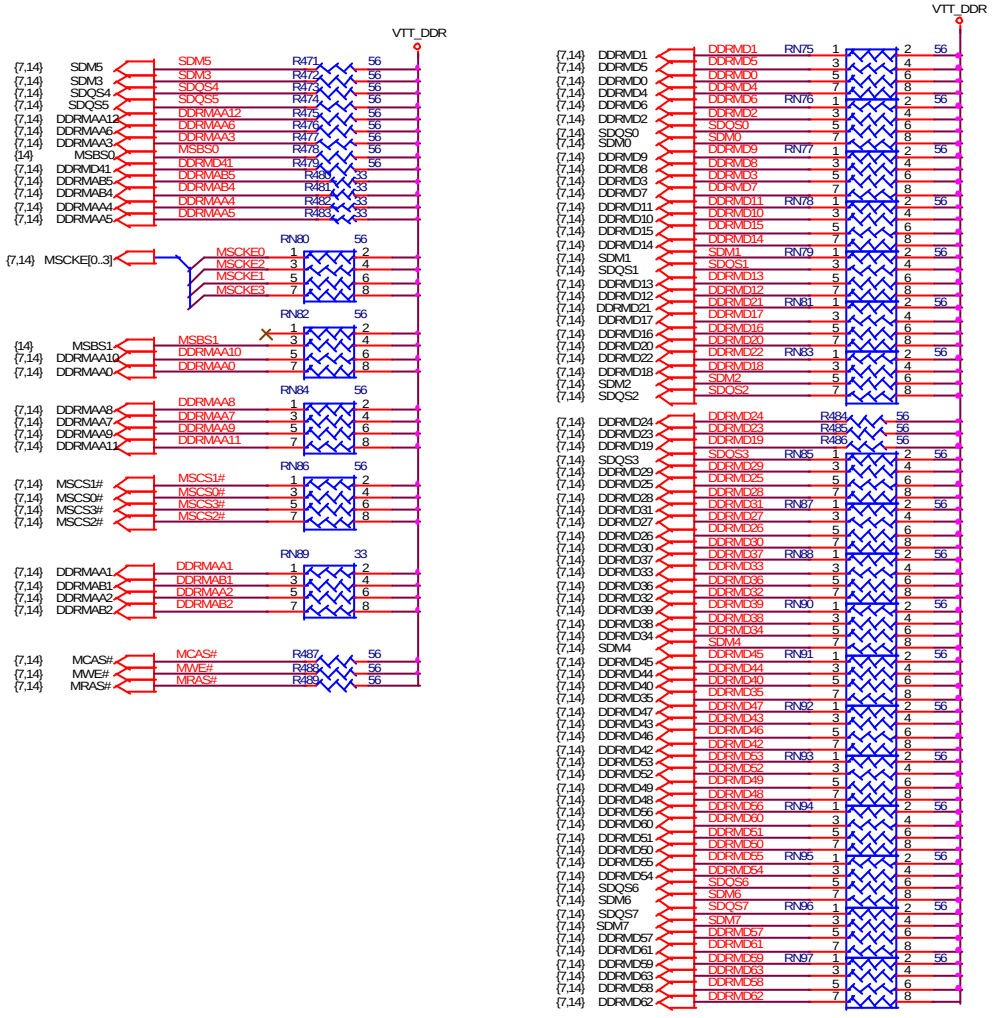

TERMINATION DECOUPLING

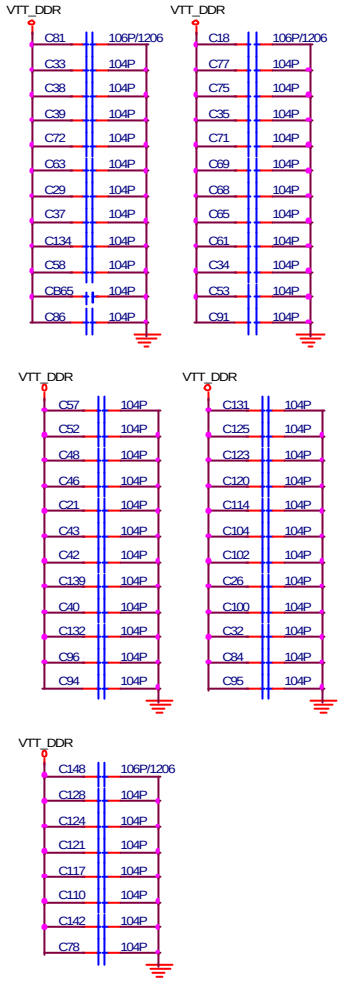

MSI	MICRO-STAR	
Title	DDR DAMPING	
Size	Document Number MS-6577	Rev 2.0C
Date: Friday, August 30, 2002	Sheet 15 of 26	

AGP UNIVERSAL 2X/4X SLOT(AGP VER:2.0 COMPLY)

VCC5 = 60mils trace / 15 mils space

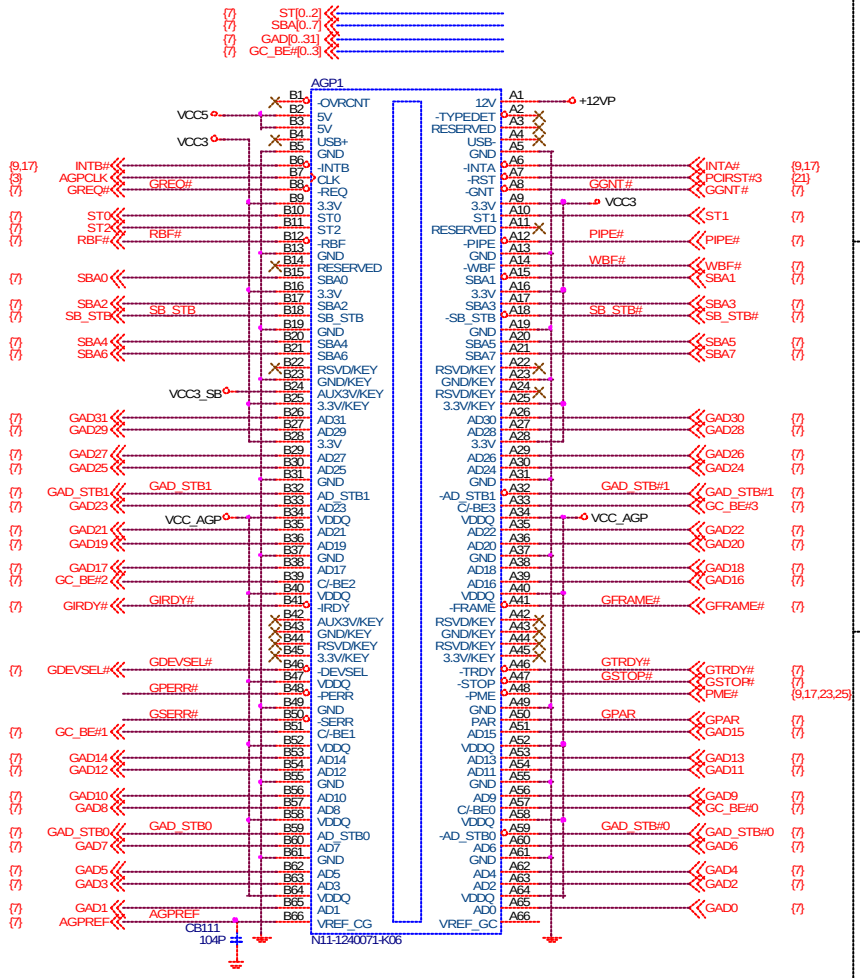

INTA#
INTB#

AGP SIGNAL REFERENCE CIRCUIT

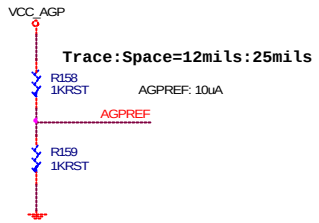

NEAR AGP SLOT

AGP TERMINATION RESISTORS

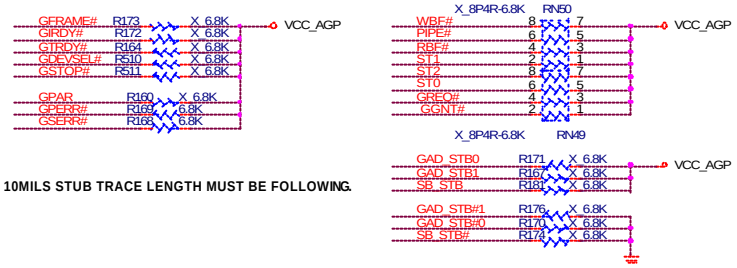

LESS 10MILS STUB TRACE LENGTH MUST BE FOLLOWING.

AGP SLOT DECOUPLING CAPACITORS

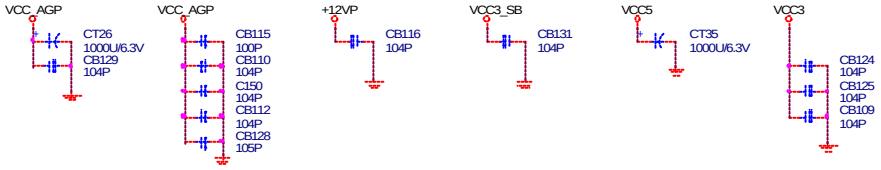

MICRO-STAR

Title	AGP SLOT	
Size	Document Number: MS-6577	Rev 2.0C
Date: Friday, August 30, 2002	Sheet 16 of 26	

PCI SLOT 1 (PCI VER: 2.2 COMPLY)

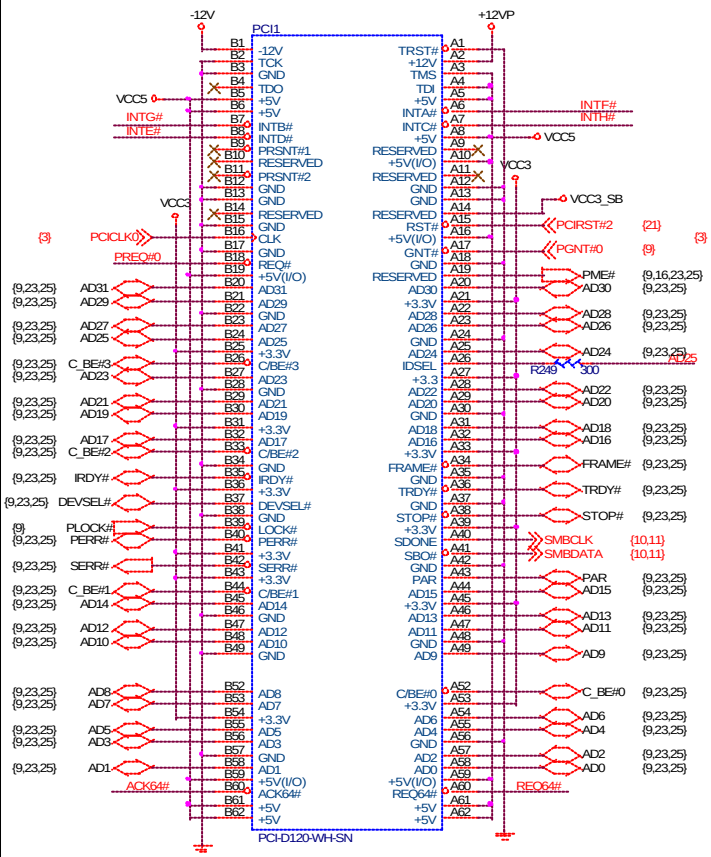

PCI SLOT 2 (PCI VER: 2.2 COMPLY)

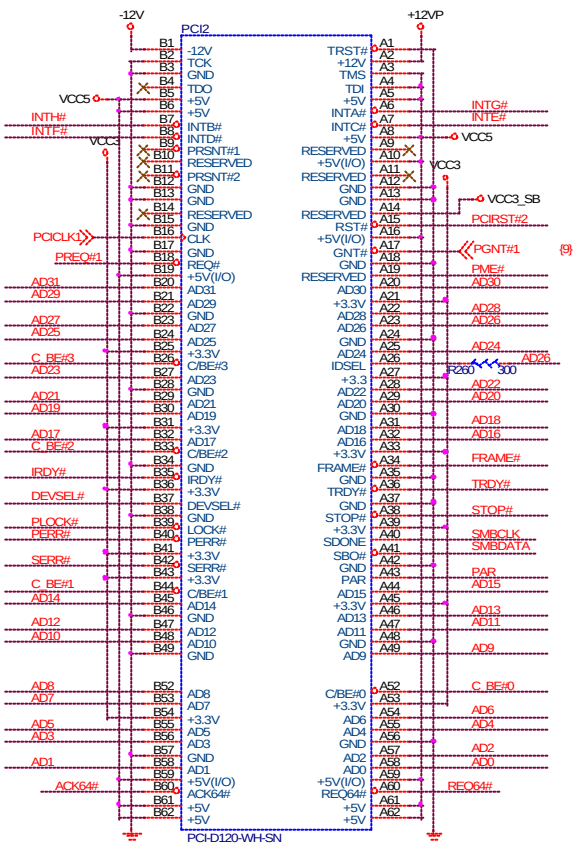

PCI SLOT 3 (PCI VER: 2.2 COMPLY)

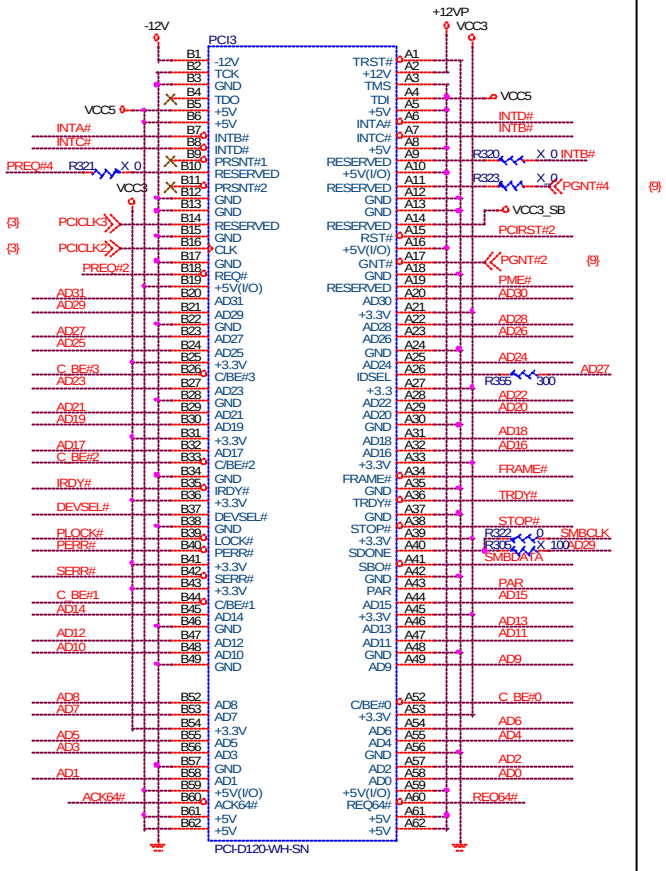

IDSEL = AD25
MASTER = PREQ0
INTF#

IDSEL = AD26
MASTER = PREQ1
INTG#

IDSEL = AD27
MASTER = PREQ2
INTD#

IDSEL = AD29
SLAVE = PREQ4
INTB#

PCI PULL-UP / DOWN RESISTORS

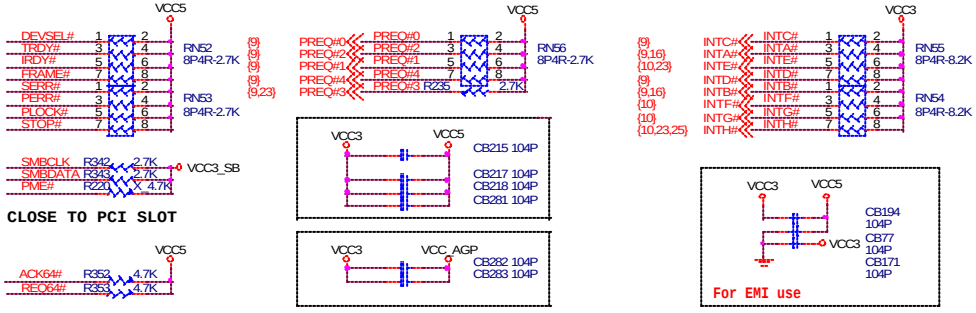

PCI SLOT DECOUPLING CAPACITORS

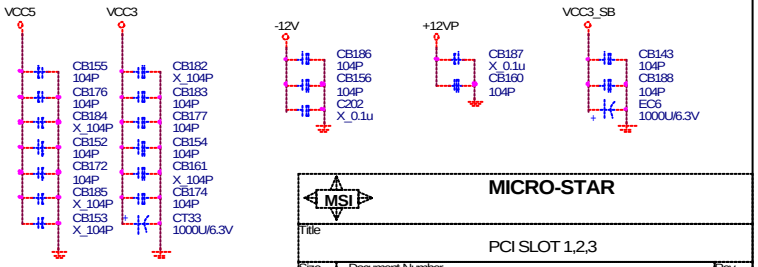

MSI	MICRO-STAR		
Title	PCI SLOT 1,2,3		
Size	Document Number	MS-6577	Rev 2.0C
Date: Friday, August 30, 2002	Sheet 17 of 26		

SERIAL PORT 1

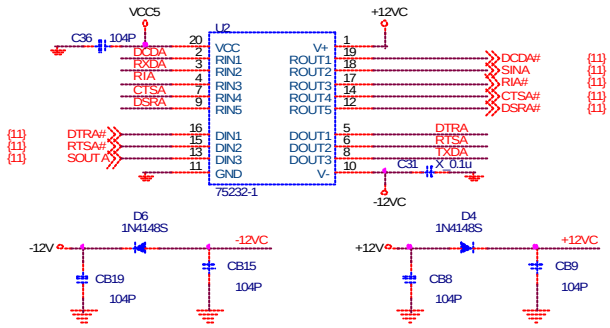

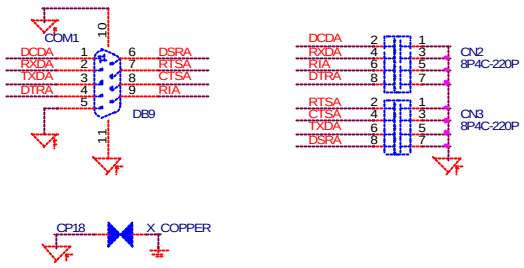

PARALLAL PORT

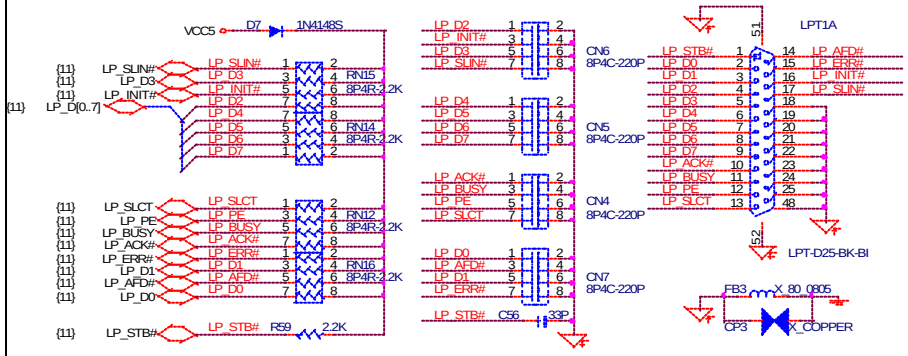

PS2 KEYBOARD & MOUSE CONNECTOR

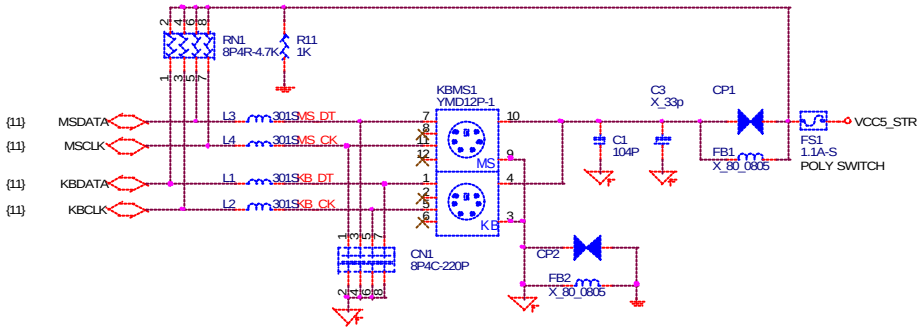

FLOPPY CONNECTOR

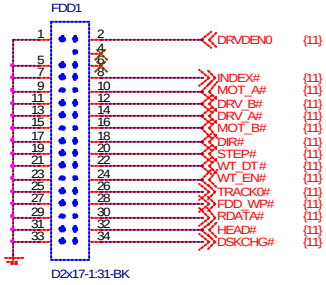

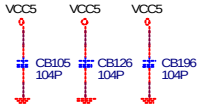

MICRO-STAR

Title: I/O CONNECTORS

Size | Document Number: MS-6577 | Rev: 2.0C

Date: Friday, August 30, 2002 | Sheet 18 of 26

REAR PANEL USB CONNECTOR FOR USB PORT 0,1

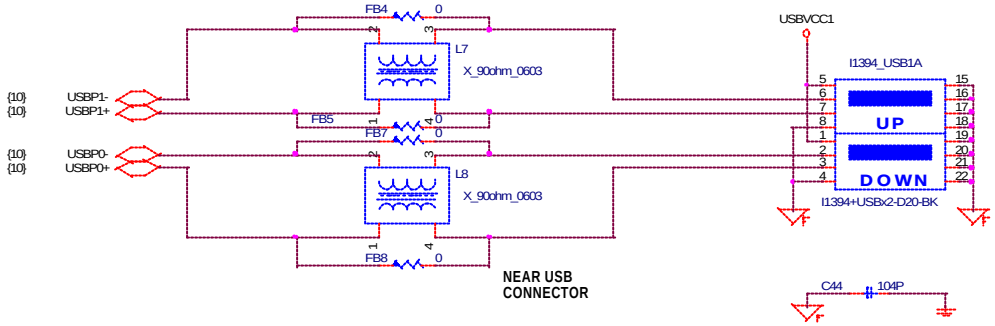

REAR PANEL USB CONNECTOR FOR USB PORT 2,3

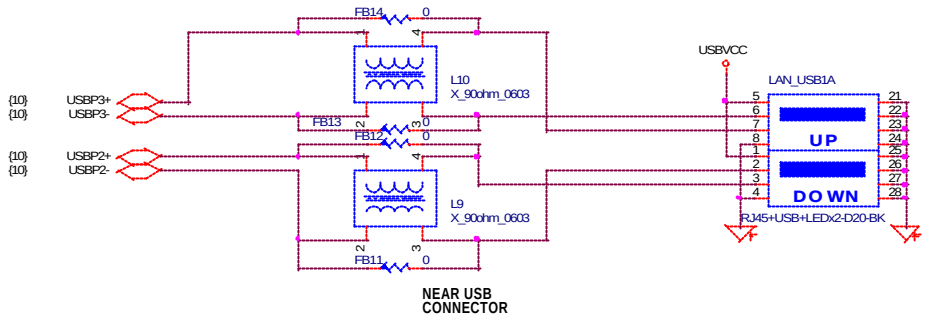

POWER CIRCUIT FOR USB PORT 0,1

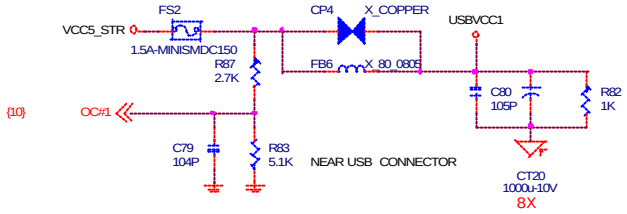

POWER CIRCUIT FOR USB PORT 2,3

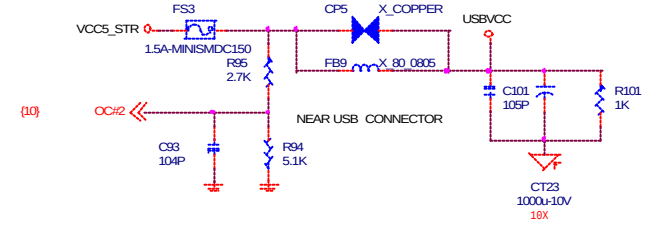

FRONT PANEL USB CONNECTOR FOR USB PORT 4,5

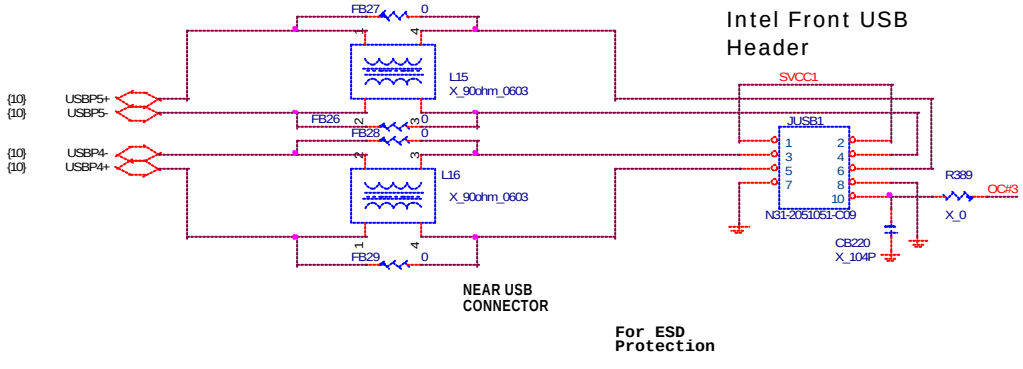

POWER CIRCUIT FOR USB PORT 4,5

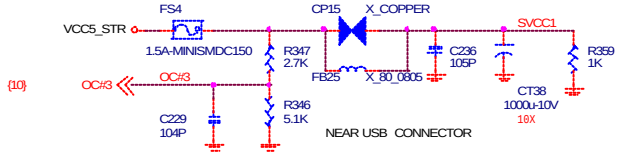

* USB Trace width : 7.5 mils
* USB Trace Spacing : 20 mils
* Differential USB Signlas Trace, Spacing : 7.5 mils
* USB Power Trace must be 50mils width

MSI	MICRO-STAR
Title	USB CONNECTORS
Size / Document Number	MS-6577
Rev	2.0C
Date: Friday, August 30, 2002	Sheet 19 of 26

ATX CONNECTOR

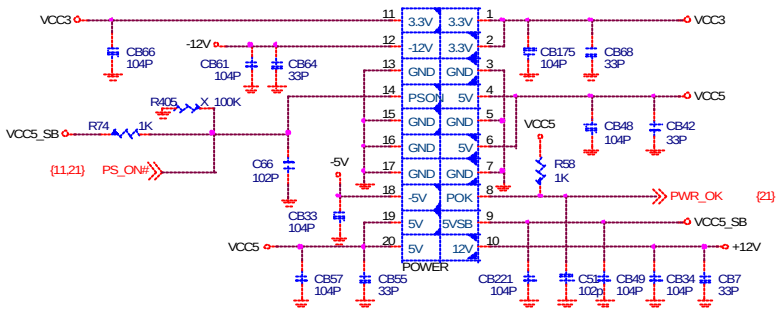

REGULATORS OUTPUT DECOUPLING CAPACITORS

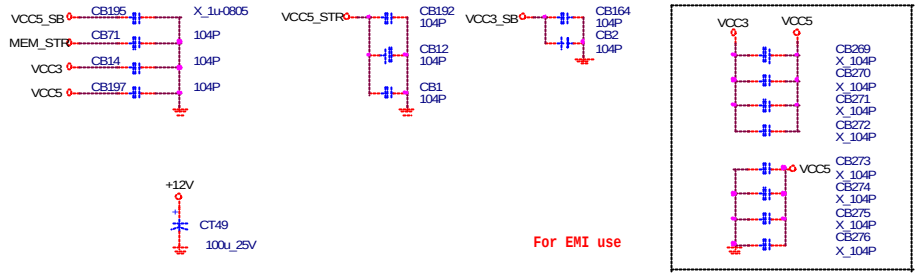

Intel Front Panel

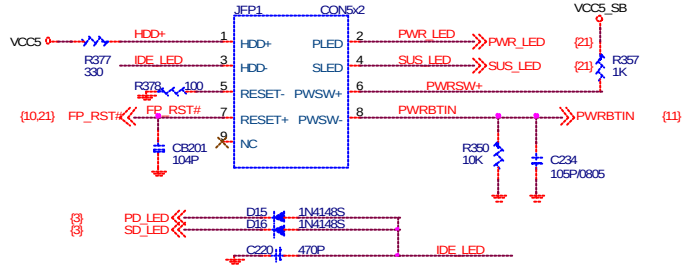

RSMRST#

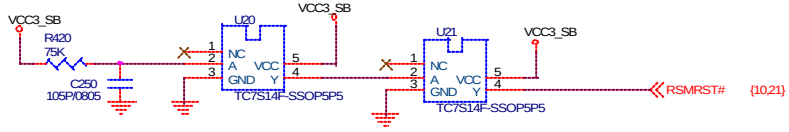

CPU FAN

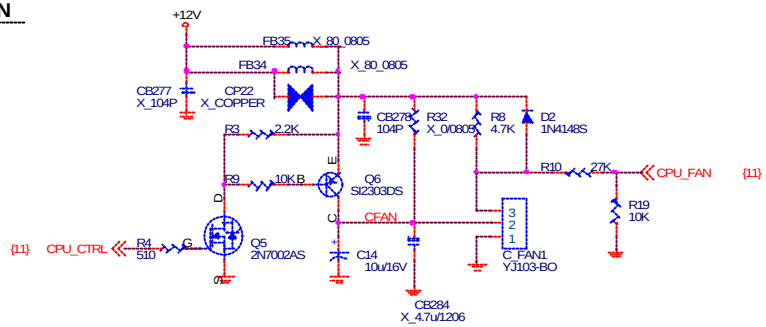

SYSTEM FAN

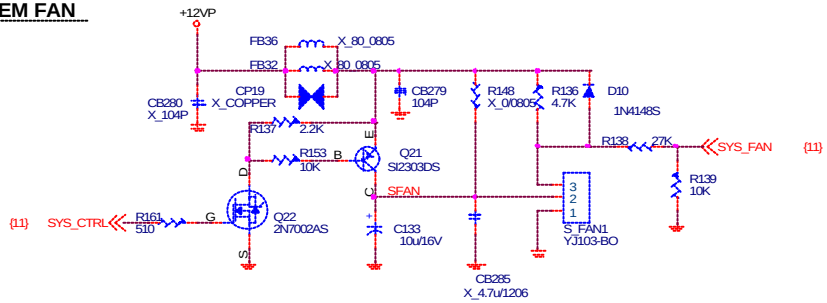

BUZZER

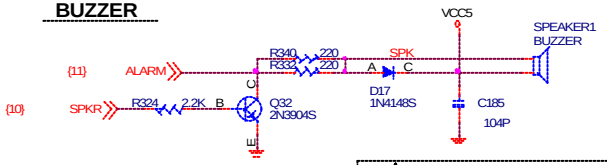

MICRO-STAR

Title: Front Panel & ATX Connector & FAN

Size | Document Number: MS-6577 | Rev 2.0C

Date: Friday, August 30, 2002 | Sheet 20 of 26

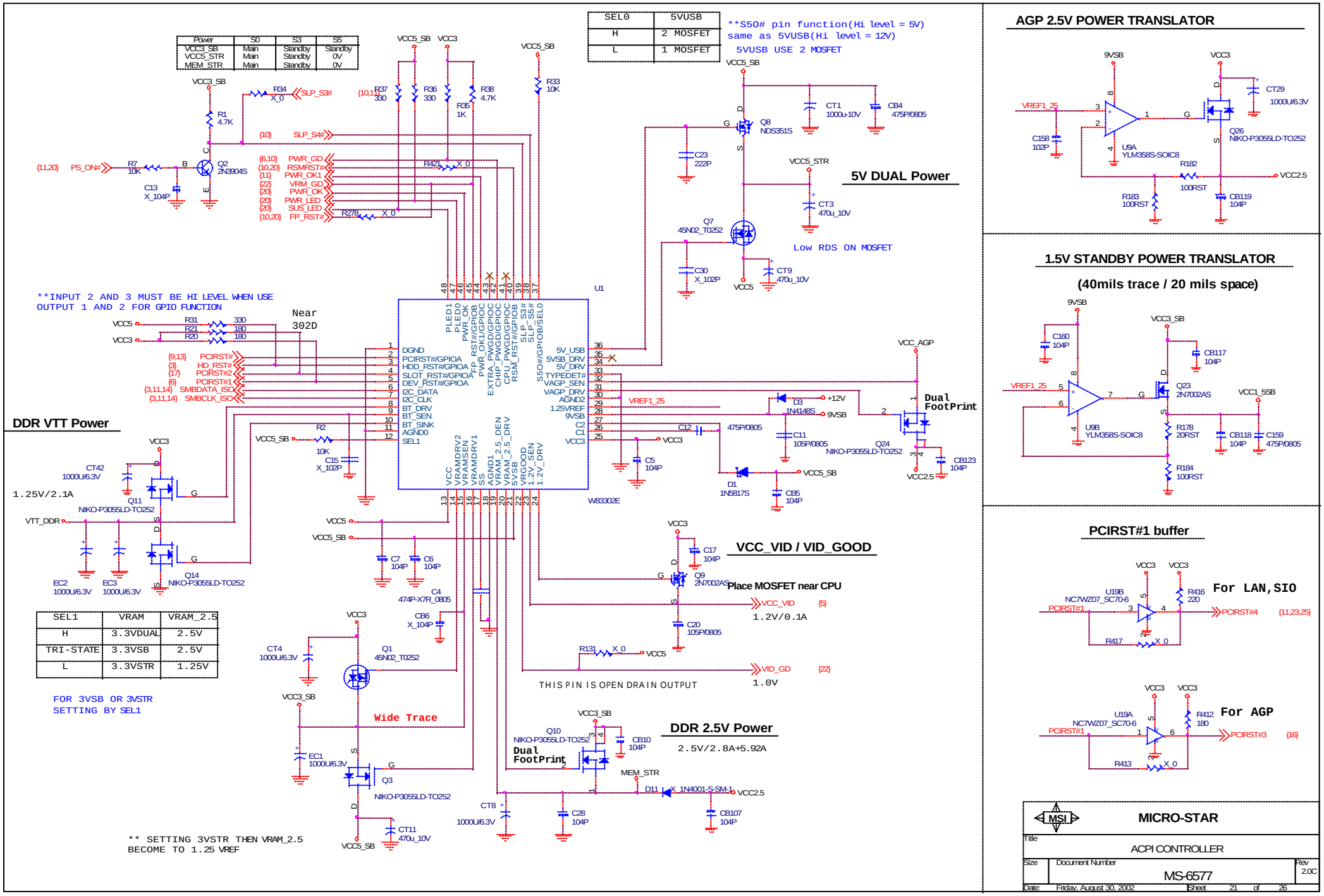
Power | S0 | S3 | S5
VCC3_SB | Main | Standby | Standby
VCC5_STR | Main | Standby | 0V
MEM_STR | Main | Standby | 0V
SEL0 | 5VUSB
H | 2 MOSFET
L | 1 MOSFET
**S50# pin function(Hi level = 5V)
same as 5VUSB(Hi level = 12V)
5VUSB USE 2 MOSFET
5V DUAL Power
Low RDS ON MOSFET
**INPUT 2 AND 3 MUST BE HI LEVEL WHEN USE
OUTPUT 1 AND 2 FOR GPIO FUNCTION
Near 302D
DDR VTT Power
1.25V/2.1A
VCC_VID / VID_GOOD
Place MOSFET near CPU
1.2V/0.1A
1.0V
THIS PIN IS OPEN DRAIN OUTPUT
Wide Trace
DDR 2.5V Power
2.5V/2.8A+5.92A
Dual FootPrint
W83302E
SEL1 | VRAM | VRAM_2.5
H | 3.3VDUAL | 2.5V
TRI-STATE | 3.3VSB | 2.5V
L | 3.3VSTR | 1.25V
FOR 3VSB OR 3VSTR
SETTING BY SEL1
** SETTING 3VSTR THEN VRAM_2.5
BECOME TO 1.25 VREF
AGP 2.5V POWER TRANSLATOR
1.5V STANDBY POWER TRANSLATOR
(40mils trace / 20 mils space)
PCIRST#1 buffer
For LAN,SIO
For AGP
MICRO-STAR
Title
ACPI CONTROLLER
Size
Document Number
MS-6577
Rev
2.0C
Date: Friday, August 30, 2002
Sheet 21 of 26

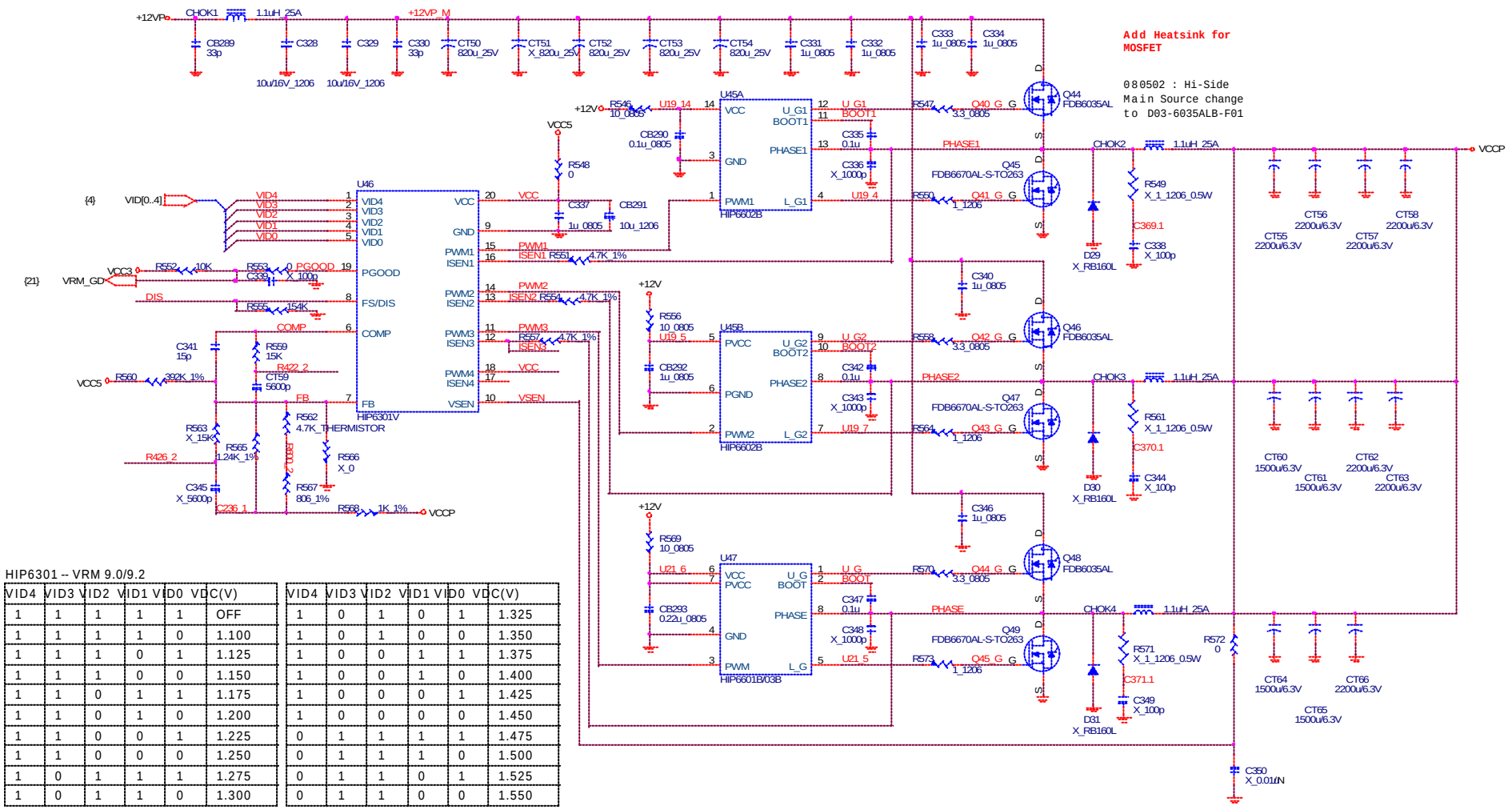

HIP6301 -- VRM 9.0/9.2

VID4	VID3	VID2	VID1	VID0	VDC(V)
1	1	1	1	1	OFF
1	1	1	1	0	1.100
1	1	1	0	1	1.125
1	1	1	0	0	1.150
1	1	0	1	1	1.175
1	1	0	1	0	1.200
1	1	0	0	1	1.225
1	1	0	0	0	1.250
1	0	1	1	1	1.275
1	0	1	1	0	1.300

VID4	VID3	VID2	VID1	VID0	VDC(V)
1	0	1	0	1	1.325
1	0	1	0	0	1.350
1	0	0	1	1	1.375
1	0	0	1	0	1.400
1	0	0	0	1	1.425
1	0	0	0	0	1.450
0	1	1	1	1	1.475
0	1	1	1	0	1.500
0	1	1	0	1	1.525
0	1	1	0	0	1.550

ATX12V POWER CONNECTOR

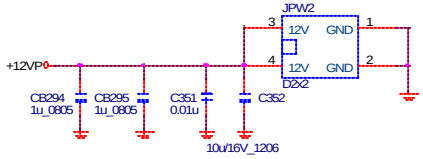

VID PULL-UP RESISTORS

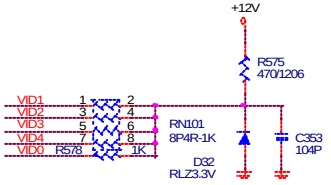

PWM GOOD

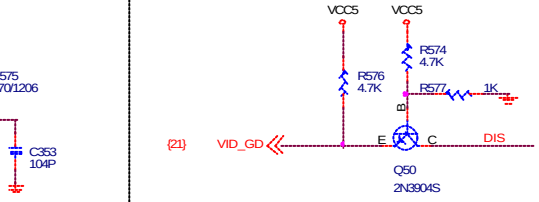

MICRO-STAR

Title: VRM 9.0

Size | Document Number: MS-6577 | Rev: 2.0C

Date: Friday, August 30, 2002 | Sheet 22 of 26

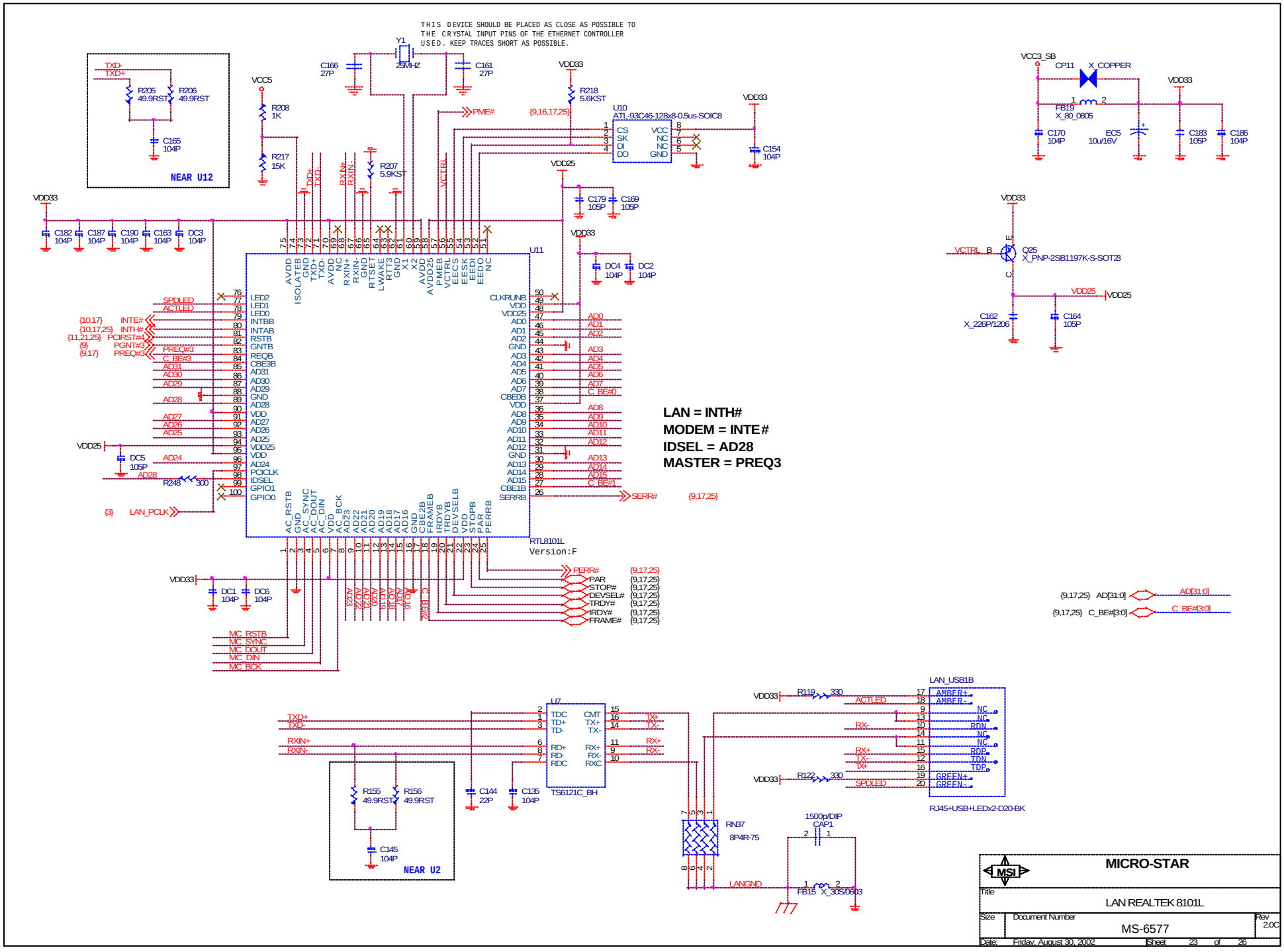
THIS DEVICE SHOULD BE PLACED AS CLOSE AS POSSIBLE TO THE CRYSTAL INPUT PINS OF THE ETHERNET CONTROLLER USED. KEEP TRACES SHORT AS POSSIBLE.
NEAR U12
NEAR U2
U11
RTL8101L
Version:F
U10
ATL-93C46-128x8-0.5us-SOIC8
U7
TS6121C_BH
LAN_USB1B
RJ45+USB+LEDx2-D20-BK
LAN = INTH#
MODEM = INTE#
IDSEL = AD28
MASTER = PREQ3
MICRO-STAR
LAN REALTEK 8101L
MS-6577
Date: Friday, August 30, 2002
Sheet 23 of 26

Video Connector

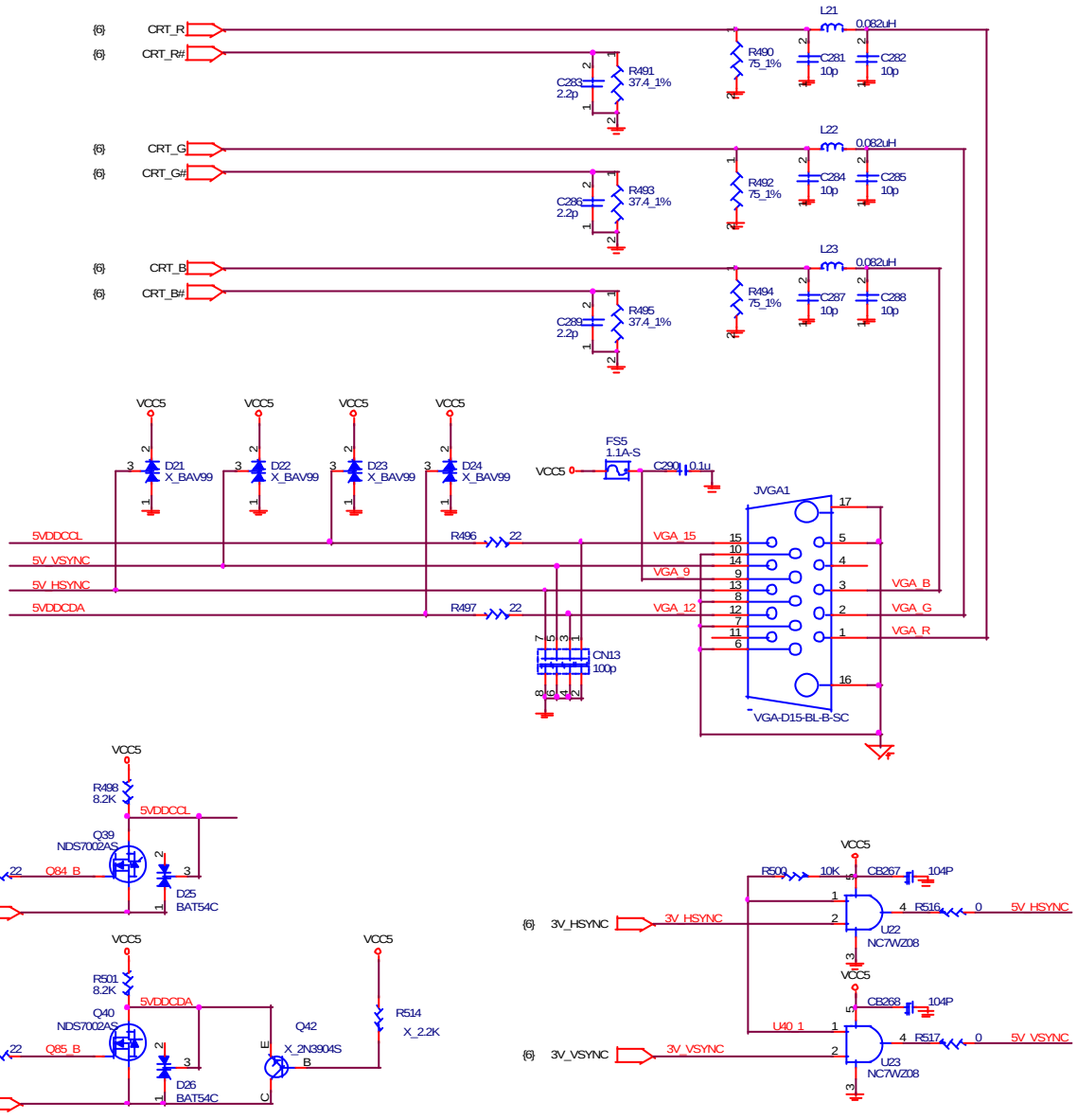

MICRO-STAR

Title: VGA CONNECTOR

Size | Document Number: MS-6577 | Rev 2.0C

Date: Friday, August 30, 2002 | Sheet 24 of 26

IEEE-1394

support S3 wake-up

NEAR EACH POWER PIN

FRONT 1394 PORT 0

FRONT 1394 PORT 1

(T/S/S=7/10/10)

Place close to pin 97
(Less then 500 mils)

Place close to pin 111
(Less then 500 mils)

(T/S/S=7/10/10)

REAR 1394 PORT 1

1394-EEPROM 24C02

(Disable Port 1)

AD29
INTH#

NEC PD72874

MICRO-STAR

Title: NEC 1394

Size | Document Number: MS-6577 | Rev 2.0C

Date: Monday, September 02, 2002 | Sheet 25 of 26

	PIN NAME	POWER WELL	USAGE	DURING RESET	S3/ S4/S5	NOTES
ICH4	GPI0	CORE	UNUSED	HIGH		
	GPI1	CORE	UNUSED	HIGH		
	GPI2	CORE	INTE#	HIGH		
	GPI3	CORE	INTF#	HIGH		
	GPI4	CORE	INTG#	HIGH		
	GPI5	CORE	INTH#	HIGH		
	GPI6	CORE	UNUSED	LOW		
	GPI7	CORE	Clear CMOS	HIGH		Clear CMOS indicator, Low to clear CMOS
	GPI8	RESUME	UNUSED	HIGH		
	GPI11	RESUME	UNUSED	HIGH		
	GPI12	RESUME	UNUSED	HIGH		
	GPI13	RESUME	-IO_PME	HIGH		From LPC IO/ -IO_PME signal
	GPO16	CORE	UNUSED	HIGH	OFF	
	GPO17	CORE	UNUSED	HIGH	OFF	
	GPO18	CORE	UNUSED	HIGH	OFF	
	GPO19	CORE	UNUSED	HIGH	OFF	
	GPO20	CORE	UNUSED	HIGH	OFF	
	GPO21	CORE	UNUSED	HIGH	OFF	
	GPO22	CORE	UNUSED	HIGH-Z	OFF	
	GPO23	CORE	UNUSED	LOW	OFF	
	GPIO24	RESUME	UNUSED	HIGH	DEFINED	
	GPIO25	RESUME	UNUSED	HIGH	DEFINED	
	GPIO27	RESUME	UNUSED	HIGH	DEFINED	
	GPIO28	RESUME	GPI28	HIGH	DEFINED	Clear password indicator, Active LOW.
	GPOI32	CORE	ATADET0	HIGH	OFF	From IDE1 ATADET0 signal
	GPIO33	CORE	ATADET1	HIGH	OFF	From IDE2 ATADET1 signal
	GPIO34	CORE	UNUSED	HIGH	OFF	
	GPIO35	CORE	UNUSED	HIGH	OFF	
	GPIO36	CORE	UNUSED	HIGH	OFF	
	GPIO37	CORE	UNUSED	HIGH	OFF	
	GPIO38	CORE	MB_ID0	HIGH	OFF	For MB version ID0
	GPIO39	CORE	UNUSED	HIGH	OFF	
	GPIO40	CORE	MB_ID1	HIGH	OFF	For MB version ID1
	GPIO41	CORE	UNUSED	HIGH	OFF	
	GPIO42	CORE	MB_ID2	HIGH	OFF	For MB version ID2
	GPIO43	CORE	MB_ID3	HIGH	OFF	For MB version ID3
	RI*	RESUME	RING#			From COM PORT RING# signal
	THERM*	CORE	THRM#			From SIO OVT# signal use
FWH	GPI0		PERS0	INPUT	DEFINED	For CPU Bus ration selection bit 0.
	GPI1		PERS1	INPUT	DEFINED	For CPU Bus ration selection bit 1.
	GPI2		PERS2	INPUT	DEFINED	For CPU Bus ration selection bit 2.
	GPI3		PERS3	INPUT	DEFINED	For CPU Bus ration selection bit 3.
	GPI4		UNUSED	LOW	OFF	

MICRO-STAR

Title: GPIO SETTING

Size | Document Number: MS-6577 | Rev: 2.0C

Date: Friday, August 30, 2002 | Sheet 26 of 29

Jumper Setting & Connector Setting

Jumper	Description	
JBAT1	CLEAR CMOS	
1-2	NORMAL	(Default)
2-3	CLEAR CMOS	

JPWD1	CLEAR PASSWORD	
1-2(SHORT)	NORMAL	(Default)
1-2(OPEN)	CLEAR PASSWORD	

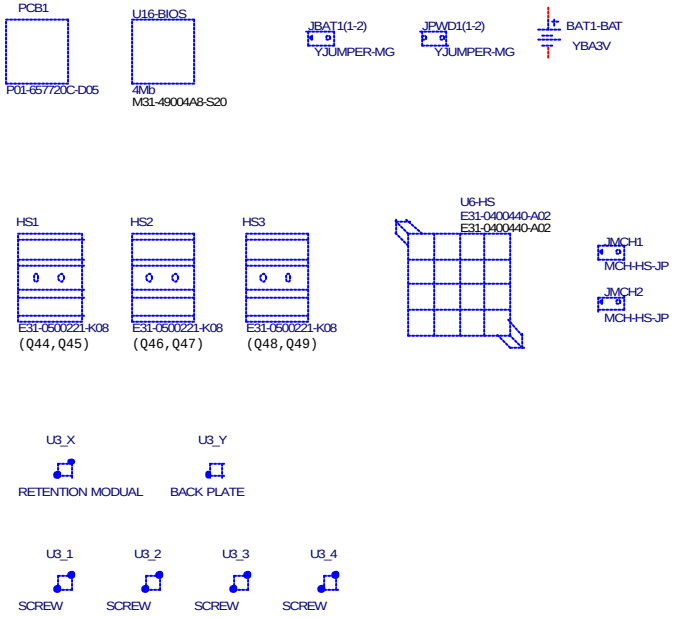

Connector	Description
U3	INTEL mPGA478-B CPU
PRIMAR1	Primary
SECON1	Secondary
FDD1	Floopy
DDR1	SDRAM DIMM1
DDR2	SDRAM DIMM2
AGP1	AGP Slot
PCI1	PCI Slot1
PCI2	PCI Slot2
PCI3	PCI Slot3(MEDION SPEC)
KBMS1	PS/2 Keyboard and PS/2 mouse
I1394_USB1	REAR 1394+USB CONNECTOR
J_1394_2	FRONT 1394 CONNECTOR
COM1	Serial Port
JVGA1	VGA PORT
LPT1	Parallel Port
LAN_USB1	LAN & USB REAR CONNECTOR
J2	AUDIO CONNECTOR
JUSB1	FRONT USB HEADER
JFP1	INTEL Front Panel
JBAT1	CLEAR CMOS HEADER
JPWD1	CLEAR PASSWORD HEADER
CONN1	ATX Power
JPW1	ATX12V Power
C_FAN1	CPU FAN HEADER
S_FAN1	SYSTEM FAN HEADER

SIO

PIN NAME	USAGE	Input/Output	NOTES
GPIO10	UNUSED	OUTPUT	
GPIO11	UNUSED	OUTPUT	
GPIO12	UNUSED	OUTPUT	
GPIO13	UNUSED	OUTPUT	
GPIO14	UNUSED	OUTPUT	
GPIO15	UNUSED	OUTPUT	
GPIO16	UNUSED	OUTPUT	
GPIO17	UNUSED	OUTPUT	
GPIO20	UNUSED	OUTPUT	
GPIO21	SMBCLK_ISO	INPUT	SMBUS CLOCK
GPIO22	SMBDATA_ISO	INPUT / OUTPUT	SMBUS DATA
GPIO23	UNUSED	OUTPUT	
GPIO24	UNUSED	OUTPUT	
GPIO25	BIOS_P	OUTPUT	FWH write protection function, active LOW.
GPIO26	UNUSED	OUTPUT	
GPIO27	DRVDEN1	OUTPUT	Floopy Drive Density Select
GPIO30	SLP_S3#	INPUT	S3 state indicator signal
GPIO31	PS_ON#	OUTPUT	Connector to Power Supply to turn on Power.
GPIO32	UNUSED	OUTPUT	
GPIO33	UNUSED	OUTPUT	
GPIO34	PWR_FAN	OUTPUT	FAN ON/OFF control, HIGH to turn on FAN.
GPIO35	UNUSED	OUTPUT	

DEVICE	ICH INT Pin	IDSEL	MASTER
PCI Slot 1	INTF# INTG# INTH# INTE#	AD25	PREQ0# PGNT0#
PCI Slot 2	INTG# INTH# INTE# INTF#	AD26	PREQ1# PGNT1#
PCI Slot 3	INTD# INTA# INTB# INTC#	AD27	PREQ2# PGNT2#
LAN 8101L	INTH# INTE#	AD28	PREQ3# PGNT3#

Codec selection :

NAME	ALC650/E	ADI1980	ALC202A
R590	X	V	X
R591	X	V	X
R592	X	V	X
R593	X	V	X
R594	X	V	X
C362	X	V	X
C363	X	V	X
C354	V	X	X
C355	V	X	X
R581	V	V	X
C356	V	V	X
C357	V	V	X
JSPD1	V	V	X
JSPD2	V	V	X
R582	V	V	X
R583	V	V	X
R584	V	V	X
R585	V	V	X
R586	V	V	X
R587	V	V	X
R588	V	V	X
R589	V	V	X
R292	0 Ohm	0 Ohm	6.2K Ohm
R293	0 Ohm	0 Ohm	6.2K Ohm

MICRO-STAR

Title: GPIO SETTING

Size | Document Number: MS-6577 | Rev 2.0C

Date: Friday, August 30, 2002 | Sheet 28 of 29

Power Delivery Map

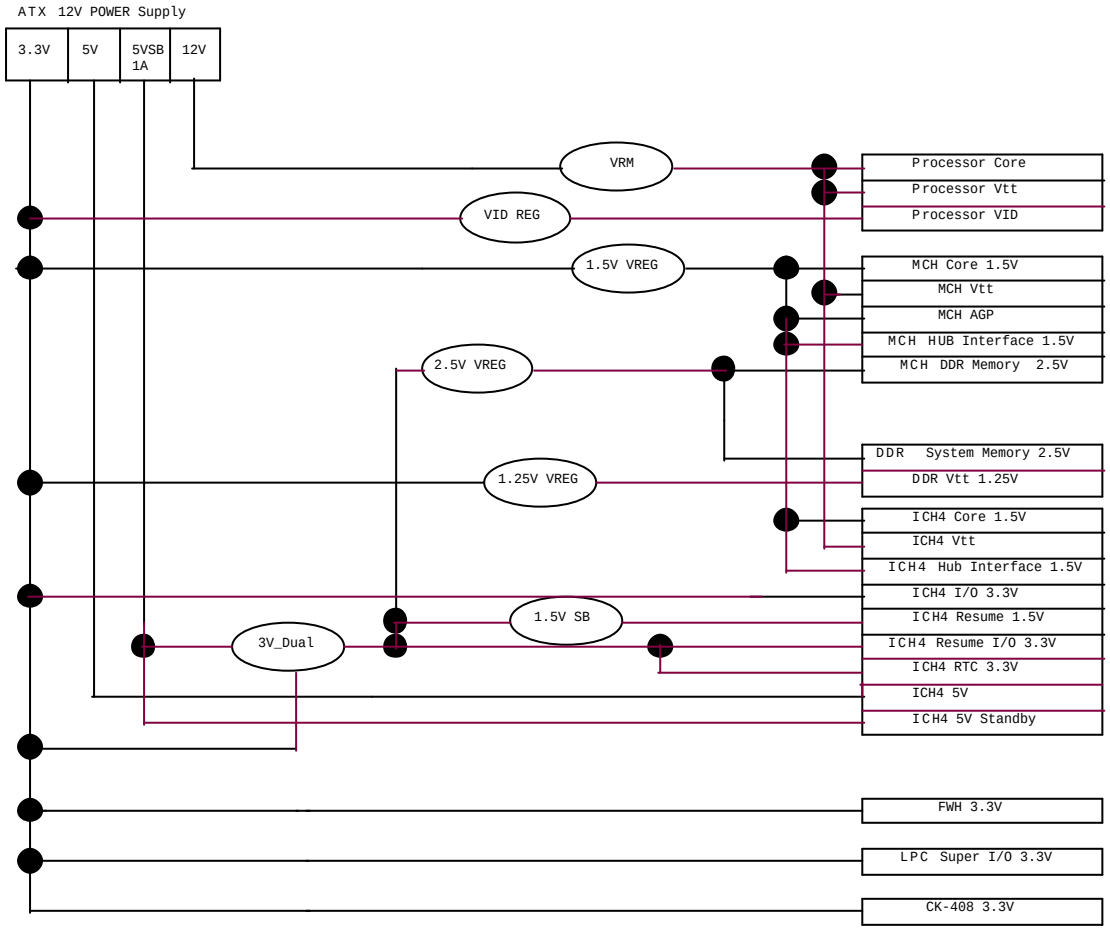

MSI	MICRO-STAR	
Title	POWER DELIVERY MAP	
Size	Document Number MS-6577	Rev 2.0C
Date: Friday, August 30, 2002	Sheet 29 of 27	

History

VER:2.0B

1. VRM change from teo phase to 3 phase solution.
2. 1394 change to two ports.(J1394_1 delete due to space limitation)

VER:2.0C

1. Layout modify : VCC5_SB have a 15mil individual from CONN1 to MS5 pin-21.
2. R568 change from 649 ohm 1% to 1K ohm 1%(R11-0102T13-A15) to adjust load line.
3. R582 change from 0 ohm to 300 ohm of FB, and pop C361 as EMI request.
4. Add Front MIC support : JFMIC, C365, R595, R369, C364 and R600.
5. Removed common chok and 0 ohm insteaded on USB ports.
6. Modify Codec circuit as Blin of Realtek recommended at 082602.
7. Removed JSPD1 connector.
8. Enabled Subwoofer : Add C366, R597 and C367.
9. Output chok change from 0.86uH to 1.1uH; Un-pop CT62 and slamiter on VRM.
10. Release to HPD for 65770829.dsn

MSI	MICRO-STAR	
Title	HISTORY	
Size	Document Number MS-6577	Rev 2.0C
Date: Friday, August 30, 2002	Sheet 30 of 30	