MS6575E *VERSION:10a*

SIS 645DX/651 CHIPSET
Willamette/Northwood 478pin mPGA-B Processor Schematics

CPU:
Willamette/Northwood mPGA-478B Processor

System Brookdale Chipset:

SIS 645DX/651 (North Bridge)+962 (South Bridge)

On Board Chipset:

LPC Super I/O -- W83697HF
AGERE 1394 PHY FW802A

Expansion Slots:

AGP2.0 SLOT * 1
PCI2.2 SLOT* 3

Cover Sheet	1
Block Diagram	2
MAIN CLOCK GEN & DDR CLOCK BUFFER	3
mPGA478-B INTEL CPU Sockets	4 - 5
SIS 645DX/651 NORTH BRIDGE	6 - 9
DDR SLOT	10
DDR TERMINATOR	11
SIS 962 SOUTH BRIDGE	12 - 14
AGP SLOT	15
PCI SLOTS	16
LAN CONTROLLER	17
RJ45 CONNECTOR	18
IDE CONNECTOR	19
USB CONNECTOR	20
AC'97 CODEC	21
AUDIO CONNECTOR	22
6 CHANNEL & FAN	23
LPC I/O(W83697HF)	24
PARALLEL & SERIAL PORT	25
VRM 9.X	26
ACPI CONTROLLER	27
ATX POWER CON & VGA CON	28
FRONT PANEL	29
IEEE 1394	30
Decoupling Capacitor	31

System Block Diagram

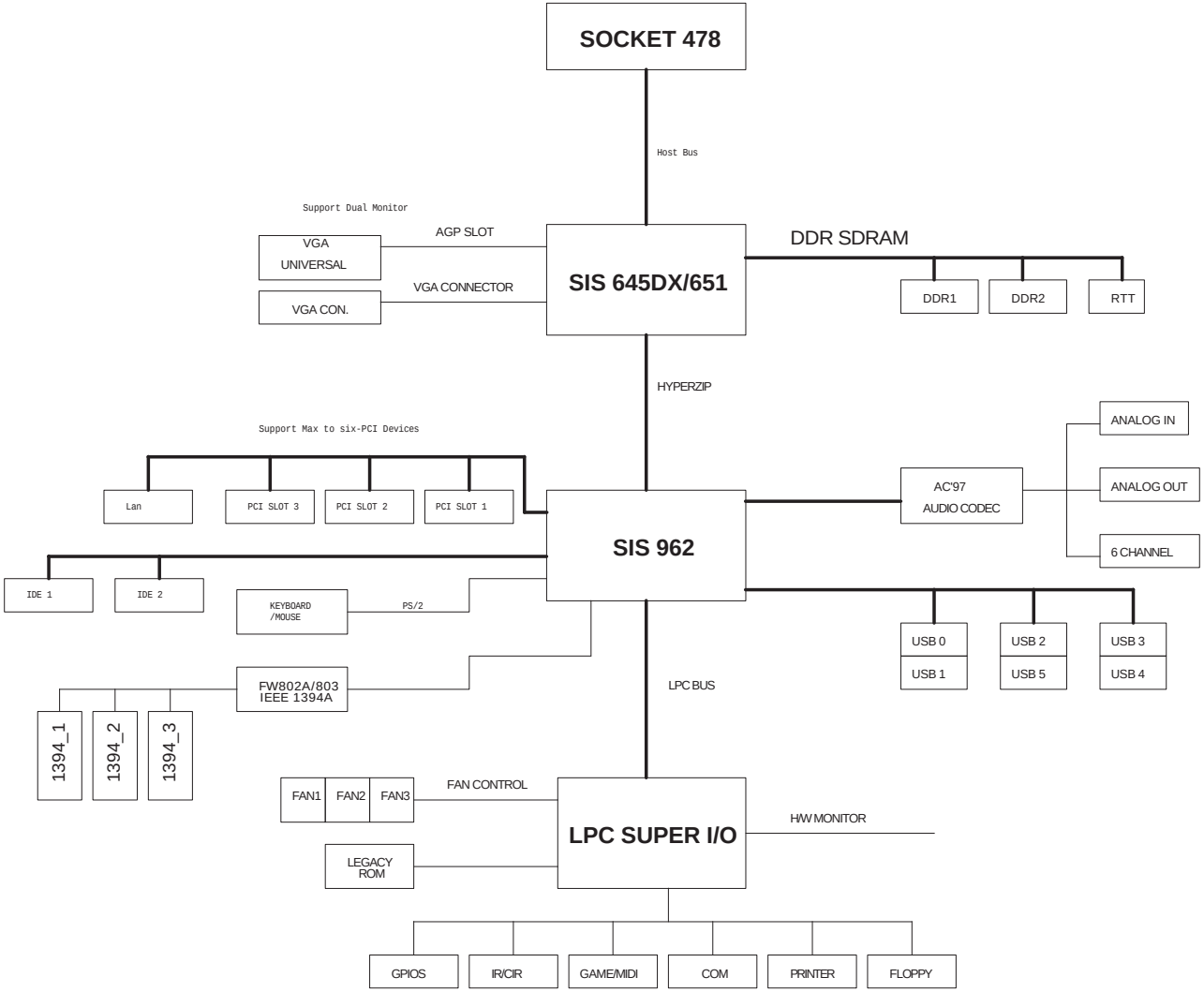

GPIO Table on SIS962

GPIO_0	I/O	MAIN	Pull-Down
GPIO_1	I/O	MAIN	Pull-Down
GPIO_2	I/O	MAIN	THERM#
GPIO_3	I/O	MAIN	EXTSMI#
GPIO_4	I/O	MAIN	Pull-Down
GPIO_5	I/O	MAIN	PREQ#5(Pull-Up)
GPIO_6	I/O	MAIN	PGNT#5(Pull-Up)
GPI_7	I/O	RESUME	LAN_WAKE#
GPI_8	I	RESUME	RING
GPI_9	I	RESUME	RESERVED
GPI_10	I	RESUME	RESERVED
GPIO_11	I/O	RESUME	RESERVED
GPIO_12	I/O	RESUME	Pull-Down
GPIO_13	I/O	RESUME	Flash Rom protection H: Disable, L: Enable
GPIO_14	I/O	RESUME	Pull-Down
GPIO_15	I/O	RESUME	KBDAT
GPIO_16	I/O	RESUME	KBCLK
GPIO_17	I/O	RESUME	MSDAT
GPIO_18	I/O	RESUME	MSCLK
GPIO_19	I/O	RESUME	SMBCLK
GPIO_20	I/O	RESUME	SMBDAT

Main Clock Generator

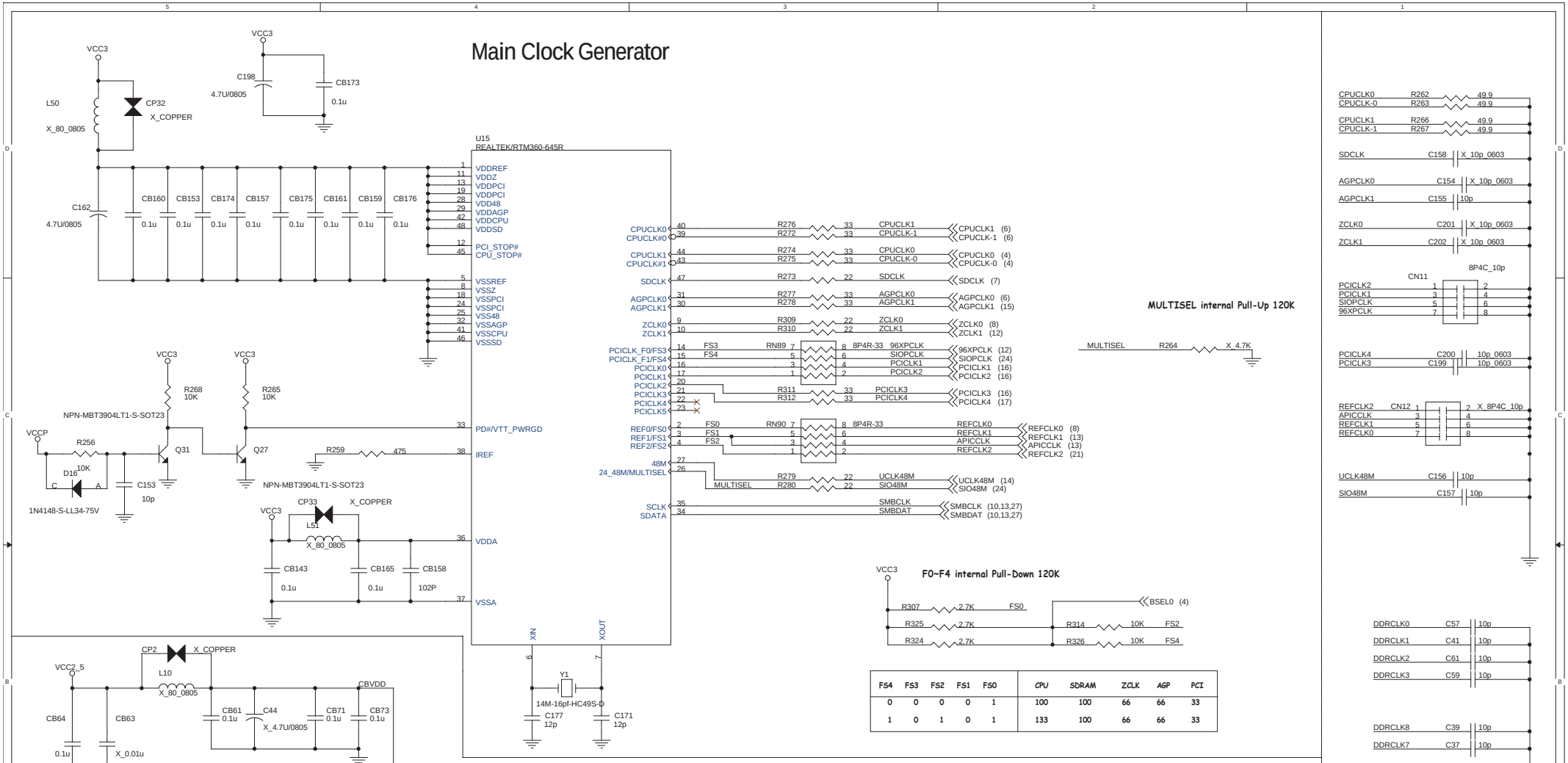

FS4	FS3	FS2	FS1	FS0	CPU	SDRAM	ZCLK	AGP	PCI
0	0	0	0	1	100	100	66	66	33
1	0	1	0	1	133	100	66	66	33

Clock Buffer (DDR)

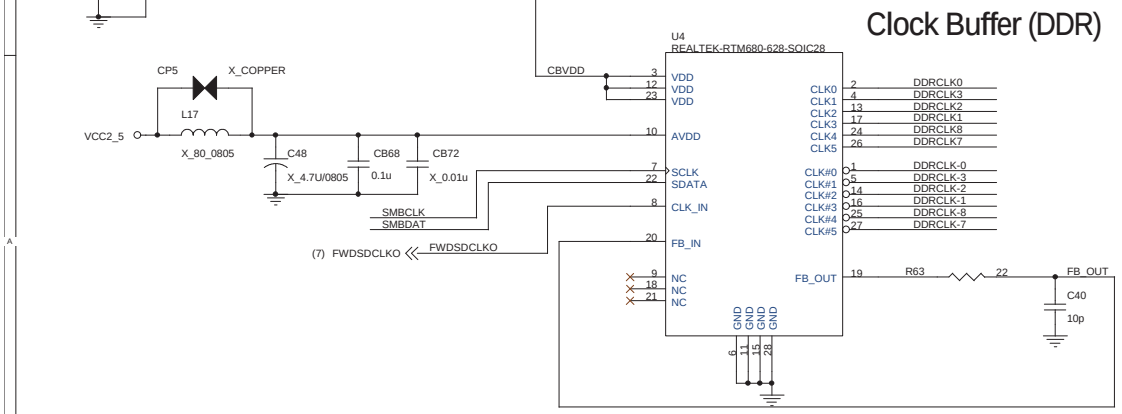

MICRO-STAR INT'L CO.,LTD.

Title: MAIN CLOCK GEN & BUFFER

Size: | Document Number: MS-6575E | Rev: 10A

Date: Friday, August 02, 2002 | Sheet 3 of 31

CPU SIGNAL BLOCK

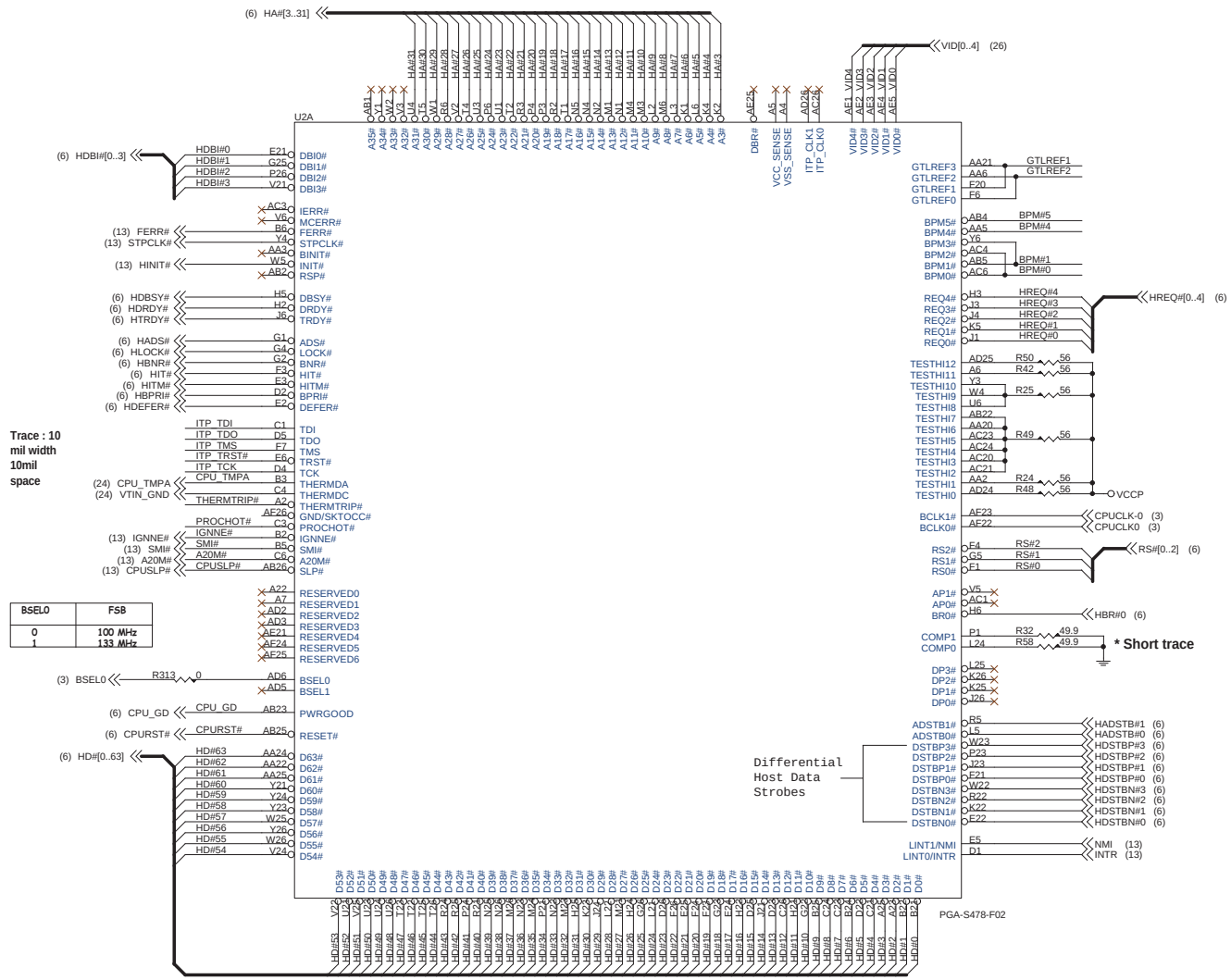

BSEL0	FSB
0	100 MHz
1	133 MHz

CPU GTL REFERNCE VOLTAGE BLOCK

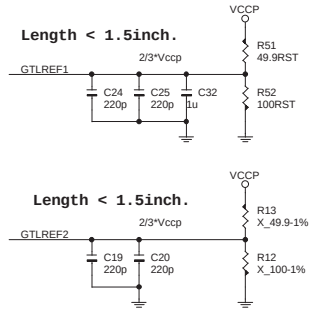

Every pin put one 220pF cap near it.
Trace Width 15mils, Space 15mils.
Keep the voltage dividers within 1.5 inches of the first GTLREF Pin

CPU ITP BLOCK

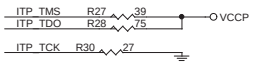

CPU STRAPPING RESISTORS

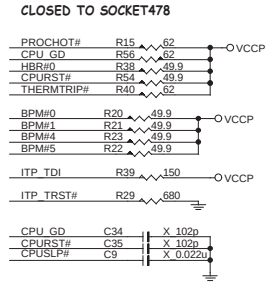

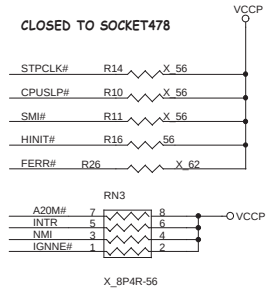

MICRO-STAR INT'L CO.,LTD.			
Title: mPGA478 CPU-1			
Size	Document Number: MS-6575E		Rev: 10A
Date: Wednesday, August 14, 2002	Sheet 4 of 31		

CPU VOLTAGE BLOCK

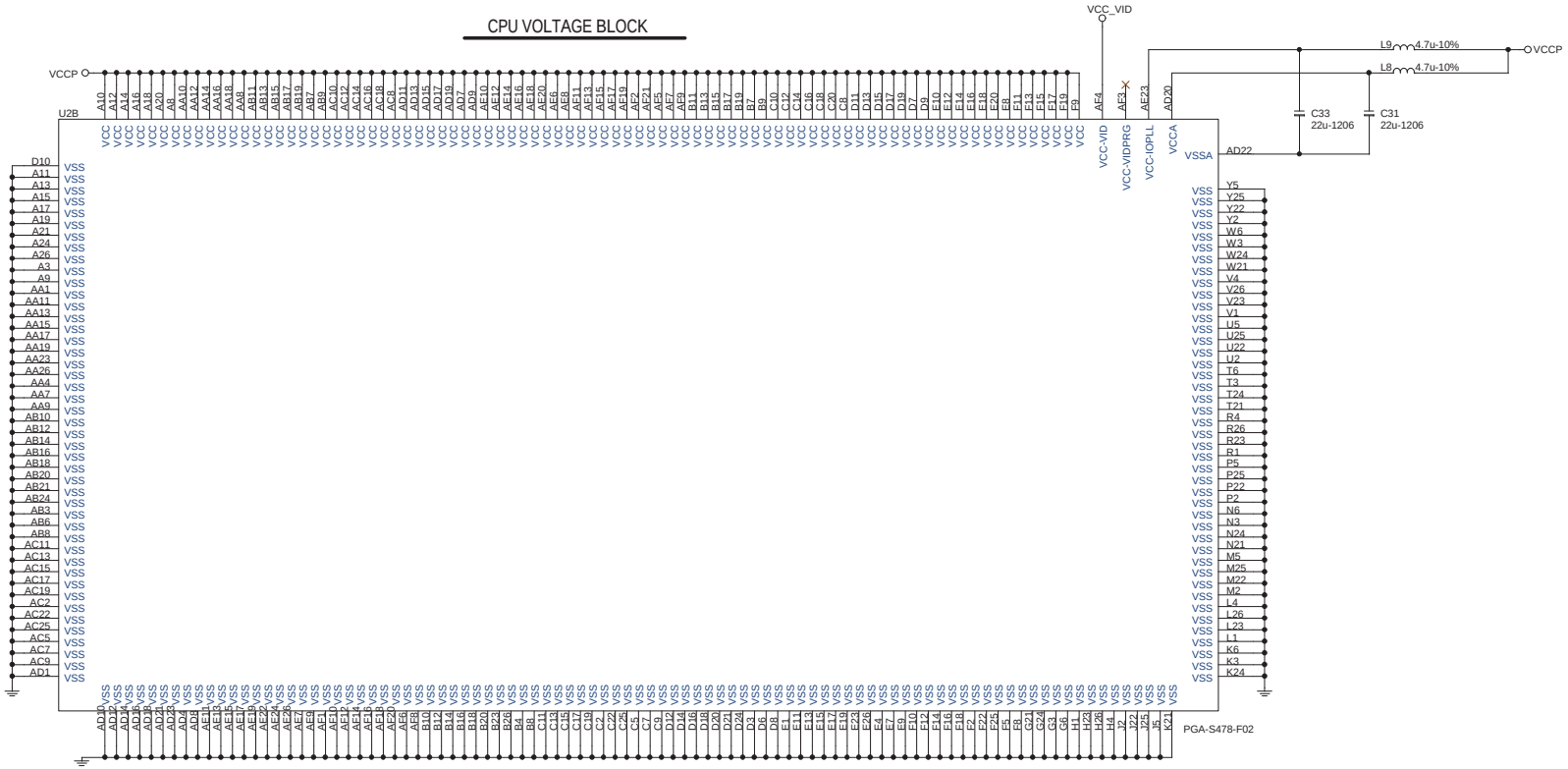

CPU DECOUPLING CAPACITORS

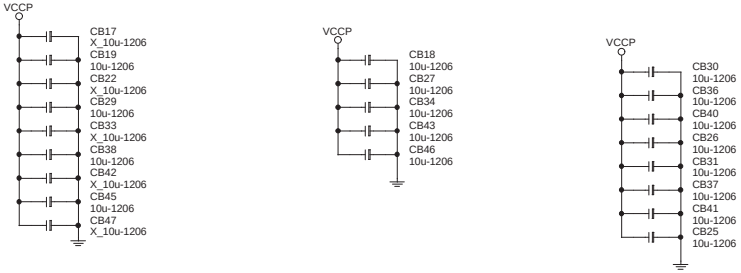

PLACE CAPS WITHIN CPU CAVITY

MICRO-STAR INT'L CO.,LTD.		
Title: mPGA478 CPU-2		
Size	Document Number: MS-6575E	Rev: 10A
Date: Wednesday, August 14, 2002	Sheet 5 of 31	

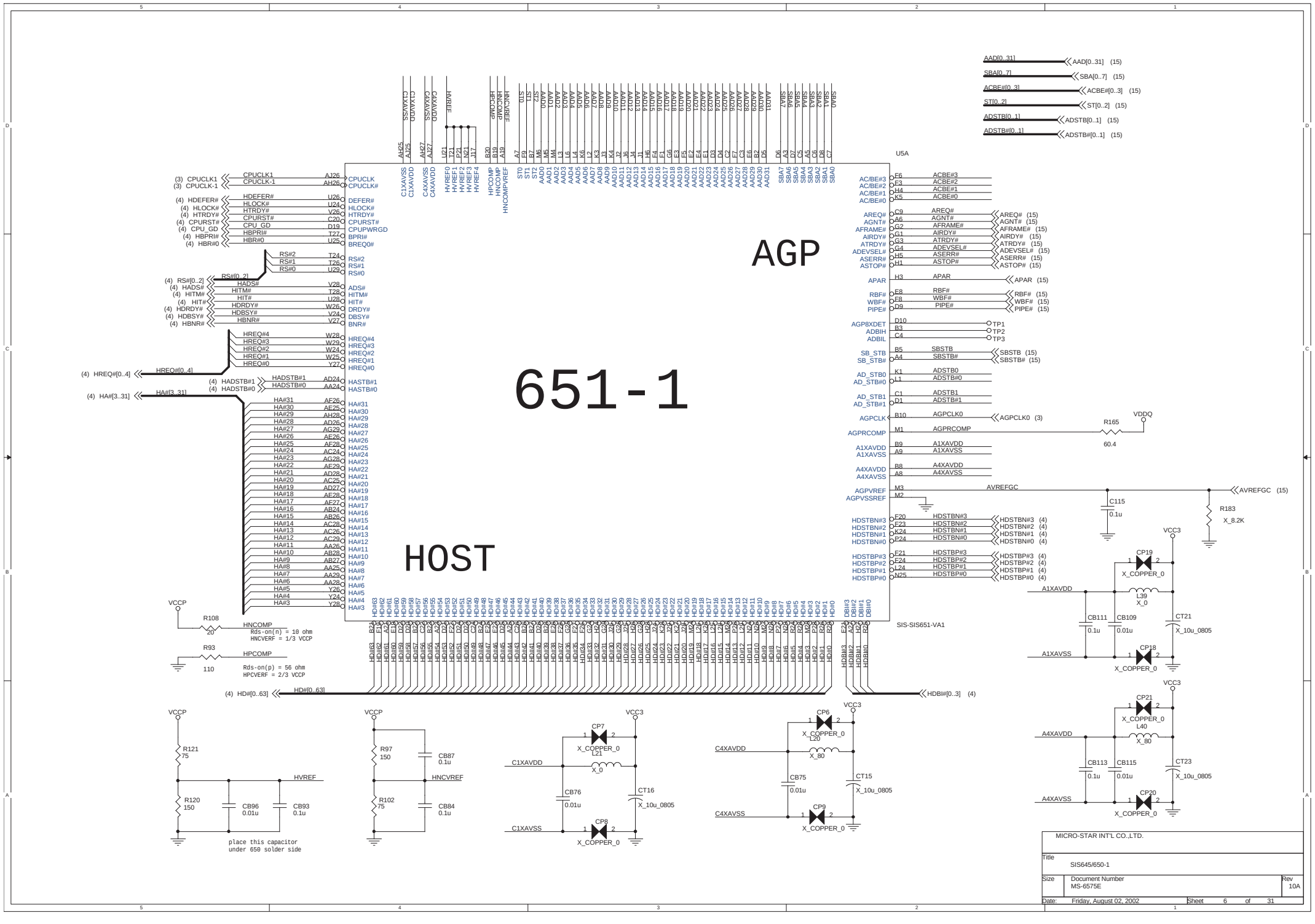
651-1
HOST
AGP
U5A
SIS-SIS651-VA1
AAD[0..31]
SBA[0..7]
ACBE#[0..3]
ST[0..2]
ADSTB[0..1]
ADSTB#[0..1]
(3) CPUCLK1
(3) CPUCLK-1
(4) HDEFER#
(4) HLOCK#
(4) HTRDY#
(4) CPURST#
(4) CPU_GD
(4) HBPRI#
(4) HBR#0
(4) RS#[0..2]
(4) HADS#
(4) HITM#
(4) HIT#
(4) HDRDY#
(4) HDBSY#
(4) HBNR#
(4) HREQ#[0..4]
(4) HADSTB#1
(4) HADSTB#0
(4) HA#[3..31]
(4) HD#[0..63]
HDBI#[0..3] (4)
AREQ# (15)
AGNT# (15)
AFRAME# (15)
AIRDY# (15)
ATRDY# (15)
ADEVSEL# (15)
ASERR# (15)
ASTOP# (15)
APAR (15)
RBF# (15)
WBF# (15)
PIPE# (15)
SBSTB (15)
SBSTB# (15)
AGPCLK0 (3)
AVREFGC (15)
HDSTBN#3 (4)
HDSTBN#2 (4)
HDSTBN#1 (4)
HDSTBN#0 (4)
HDSTBP#3 (4)
HDSTBP#2 (4)
HDSTBP#1 (4)
HDSTBP#0 (4)
VCCP
R108
20
HNCOMP
Rds-on(n) = 10 ohm
HNCVERF = 1/3 VCCP
R93
110
HPCOMP
Rds-on(p) = 56 ohm
HPCVERF = 2/3 VCCP
R165
60.4
VDDQ
C115
0.1u
R183
X_8.2K
VCC3
CP19
X_COPPER_0
L39
X_0
A1XAVDD
CB111
0.1u
CB109
0.01u
CT21
X_10u_0805
CP18
A1XAVSS
CP21
L40
X_80
A4XAVDD
CB113
0.1u
CB115
0.01u
CT23
CP20
A4XAVSS
R121
75
R120
150
HVREF
CB96
0.01u
CB93
0.1u
place this capacitor
under 650 solder side
R97
150
R102
75
HNCVREF
CB87
0.1u
CB84
0.1u
CP7
L21
C1XAVDD
CB76
0.01u
CT16
C1XAVSS
CP8
CP6
L20
C4XAVDD
CB75
0.01u
CT15
C4XAVSS
CP9
MICRO-STAR INT'L CO.,LTD.
Title
SIS645/650-1
Size
Document Number
MS-6575E
Rev
10A
Date: Friday, August 02, 2002
Sheet 6 of 31

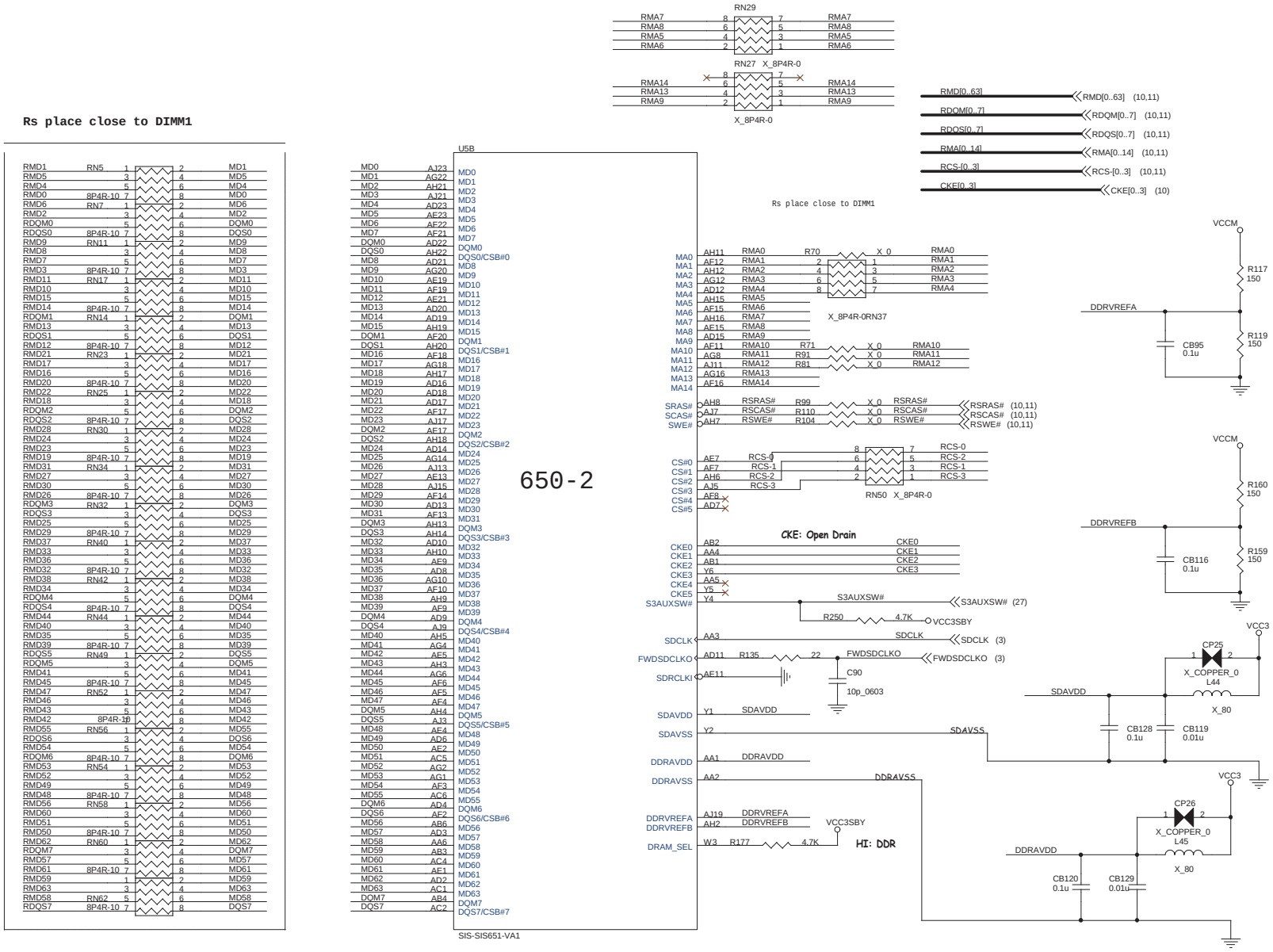

MICRO-STAR INT'L CO.,LTD.

Title	SIS645/650-2		
Size	Document Number MS-6575E		Rev 10A
Date: Friday, August 02, 2002	Sheet 7 of 31		

NOTE: This page is for universal PCB design(suitable for both 645 or 650)

NB Hardware Trap Table

	0	1	Default	embedded pull-low (30~50K Ohm)
DLLEN#	enable PLL	disable PLL	0	yes
DRAM_SEL	SDR	DDR	1(DDR)	yes
TRAP0	normal	NB debug mode	0	yes
TRAP1	TV selection, NTSC/PAL(0/1)		0	
CSYNC	enable VB		0	
RSYNC	enable VGA interface		1	
LSYNC	enable panel link		0	

for 651 only

VCC3

RSYNC R162 4.7K

TRAP1 R150 4.7K

CSYNC R190 4.7K

LSYNC R189 4.7K

(12) ZAD[0..15] — ZAD[0..15]

(12) ZSTB[0..1] — ZSTB[0..1]

(12) ZSTB-[0..1] — ZSTB-[0..1]

U5C
SIS-SIS650-VA1

VGA

HyperZip

651-3

Stereo Glass

(3) ZCLK0 — ZCLK0 V3 — ZCLK

(12) ZUREQ — ZUREQ U6 — ZUREQ

(12) ZDREQ — ZDREQ U1 — ZDREQ

ZSTB0 T3 — ZSTB0

ZSTB-0 T1 — ZSTB#0

ZSTB1 P1 — ZSTB1

ZSTB-1 P3 — ZSTB#1

ZAD0 T4 — ZAD0
ZAD1 R3 — ZAD1
ZAD2 T5 — ZAD2
ZAD3 T6 — ZAD3
ZAD4 R2 — ZAD4
ZAD5 R6 — ZAD5
ZAD6 R1 — ZAD6
ZAD7 R4 — ZAD7
ZAD8 P4 — ZAD8
ZAD9 N3 — ZAD9
ZAD10 P5 — ZAD10
ZAD11 P6 — ZAD11
ZAD12 N1 — ZAD12
ZAD13 N6 — ZAD13
ZAD14 N2 — ZAD14
ZAD15 N4 — ZAD15
ZVREF U3 — ZVREF
VDDZCMP V5 — VDDZCMP

ZCMP_N U4 — ZCMP_N

ZCMP_P U2 — ZCMP_P

VSSZCMP V6 — VSSZCMP

Z1XAVDD W1 — Z1XAVDD

Z1XAVSS W2 — Z1XAVSS

Z4XAVDD V2 — Z4XAVDD

Z4XAVSS V1 — Z4XAVSS

VOSCI C15 — REFCLK0 — REFCLK0 (3)

ROUT A12 — R158 0 — ROUT — ROUT (28)
GOUT B13 — R155 0 — GOUT — GOUT (28)
BOUT A13 — R146 0 — BOUT — BOUT (28)

C101 X_47p C100 X_47p C96 X_47p

HSYNC F13 — R134 33 — HSYNC — HSYNC (28)
VSYNC F13 — R136 33 — VSYNC — VSYNC (28)

VGPIO0 D13 — R129 100 — DDC1CLK — DDC1CLK (28)
VGPIO1 D12 — R130 100 — DDC1DATA — DDC1DATA (28)

INT#A B11 — INTA# — INTA# (12,15,16)

CSYNC E12 — CSYNC — CSYNC (15)
RSYNC A11 — RSYNC — RSYNC (15)
LSYNC F12 — LSYNC — LSYNC (15)

VCOMP E14 — VCOMP
VRSET D14 — VRSET
VVBWN F14 — VVBWN

DACAVDD1 B12 — DACAVDD1
DACAVSS1 C12 — DACAVSS1

DACAVDD2 C13 — DACAVDD1
DACAVSS2 C14 — DACAVSS1

DCLKAVDD B15 — DCLKAVDD
DCLKAVSS A15 — DCLKAVSS

ECLKAVDD B14 — ECLKAVDD
ECLKAVSS A14 — ECLKAVSS

PCIRST# Y2 — PCIRST1# — (17,24,27) PCIRST1#
PWRGD W4 — PWRGD — (13,26,27) PWRGD
AUXOK W6 — RSMRST# — (13,27) RSMRST#
TRAP1 D11 E10 — TRAP1
TRAP0 A10 E11 C11 — TESTMODE2 TESTMODE1 TESTMODE0
DLLEN# E11 F10 — ENTEST

ENTEST R145 4.7K

PWRGD C111 0.1u

RSMRST# C221 0.1u

VCC1_8

R167 150

ZVREF

R173 150

CB130 0.1u

VCC3

COST DOWN

L43 X_0 CP24 X_COPPER_0 C108 0.1u Z1XAVDD Z1XAVSS

COST DOWN

L42 X_0 CP23 X_COPPER_0 C107 0.1u Z4XAVDD Z4XAVSS

VCC1_8 L41 X_0 CP22 X_COPPER_0 C109 0.1u

COST DOWN

R164 56 VDDZCMP ZCMP_N

R163 56 ZCMP_P VSSZCMP

DCLKAVDD CP11 X_COPPER_0 L25 X_603

CB100 0.1u CP12 X_COPPER_0 C87 X_10u_0805

DCLKAVSS X_80_0603 L26

ECLKAVDD CP13 X_COPPER_0 L27 X_603

CB102 0.1u CP14 X_COPPER_0 C88 X_10u_0805

ECLKAVSS L28 X_80_0603

VVBWN CB91 0.1u

VCOMP CB90 0.1u

VRSET R123 130

DACAVDD1 L32 80_0603 VCC1_8

CB107 0.1u CP15 X_COPPER_0 C93 X_10u_0805

DACAVSS1 X_80_0603 L29

MICRO-STAR INT'L CO.,LTD.			
Title	SIS645/650		
Size	Document Number MS-6575E		Rev 10A
Date: Friday, August 02, 2002	Sheet 8 of 31		

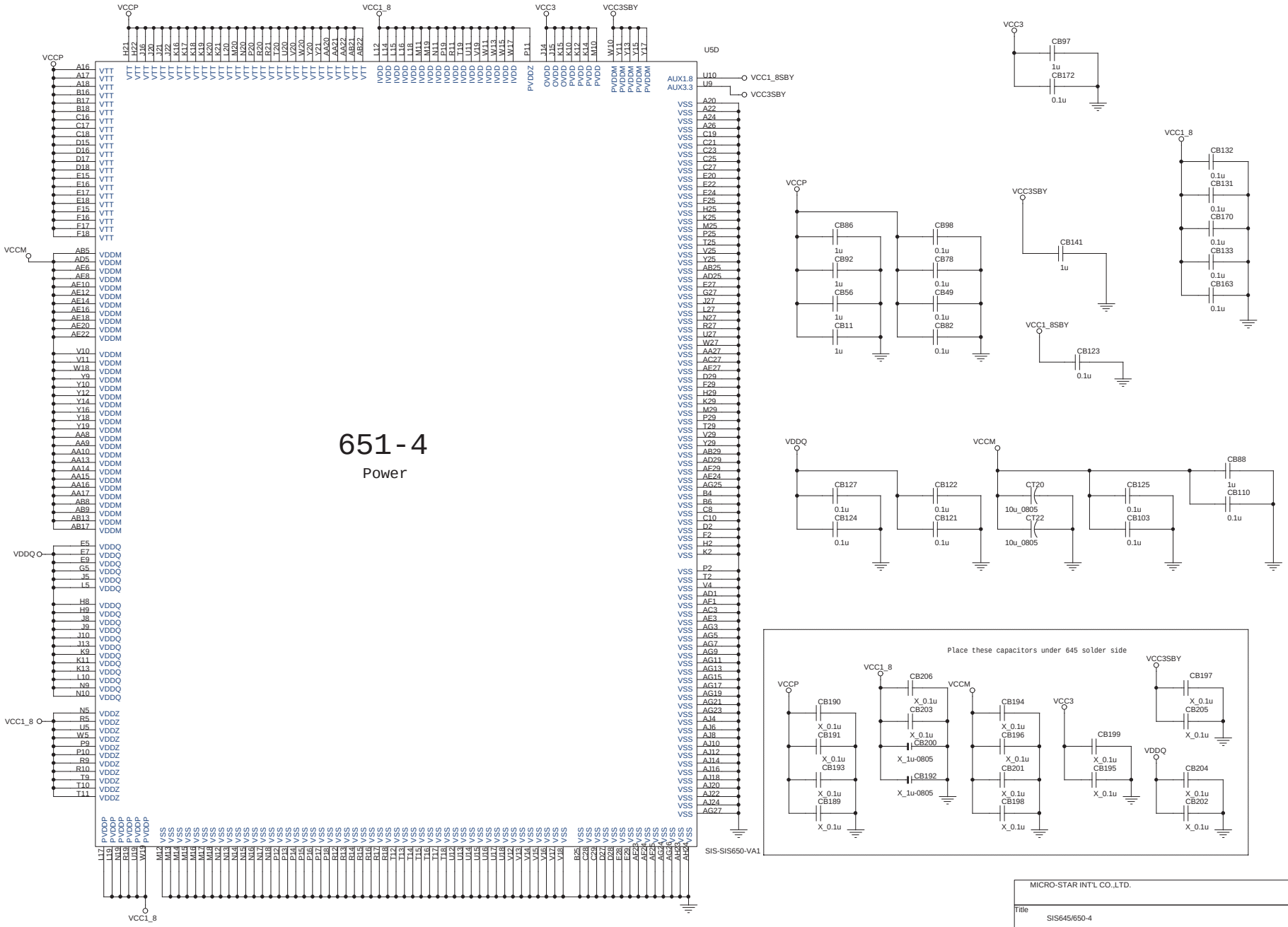

MICRO-STAR INT'L CO.,LTD.

Title	SIS645/650-4		
Size	Document Number MS-6575E		Rev 10A
Date: Friday, August 02, 2002	Sheet 9 of 31		

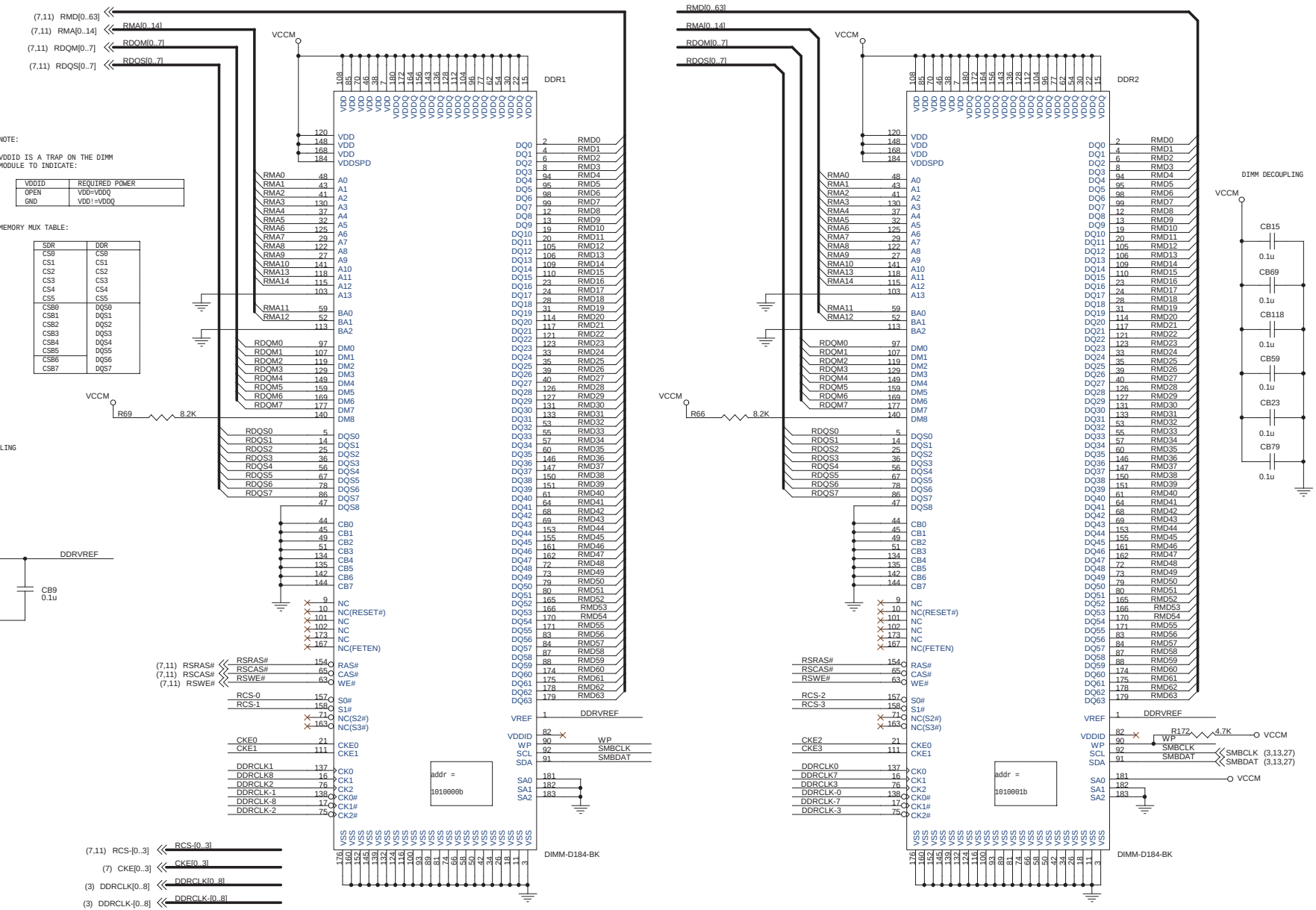

MICRO-STAR INT'L CO.,LTD.

Title: DDR1 & DDR2

Size: Document Number MS-6575E | Rev 10A

Date: Friday, August 02, 2002 | Sheet 10 of 31

SSTL-2 Termination Resistors

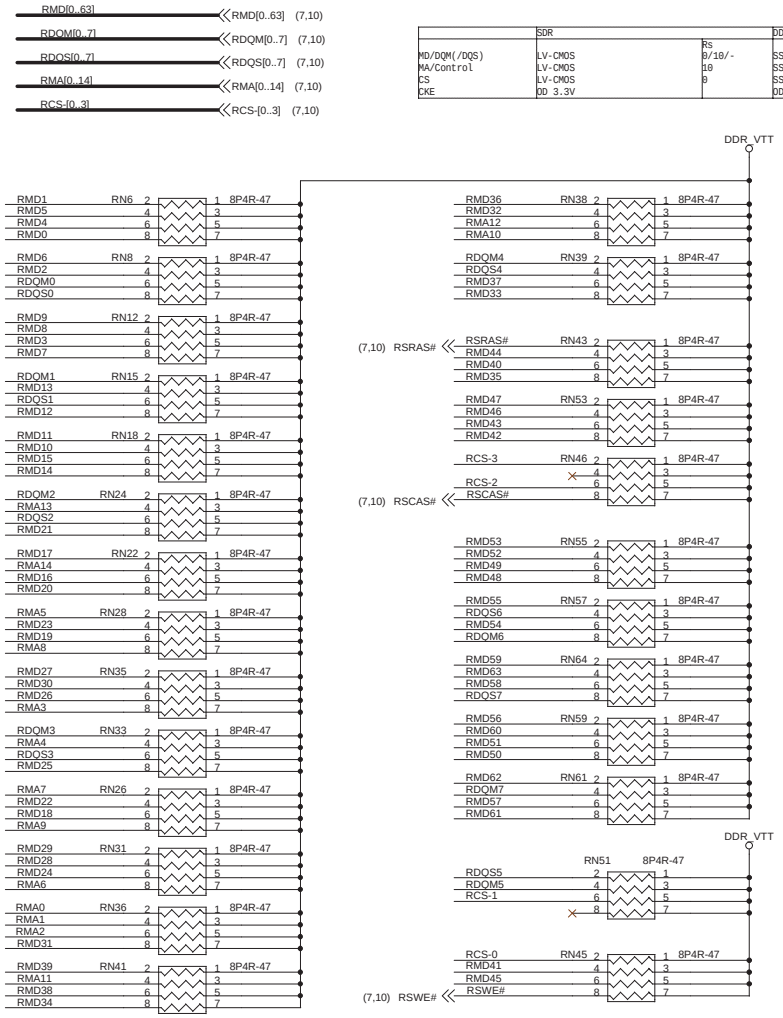

	SDR		DDR		
		Rs		Rs	Rtt
MD/DQM(/DQS)	LV-CMOS	0/10/-	SSTL-2	10	47
MA/Control	LV-CMOS	10	SSTL-2	0	47
CS	LV-CMOS	0	SSTL-2	0	47
CKE	OD 3.3V		OD 2.5V		

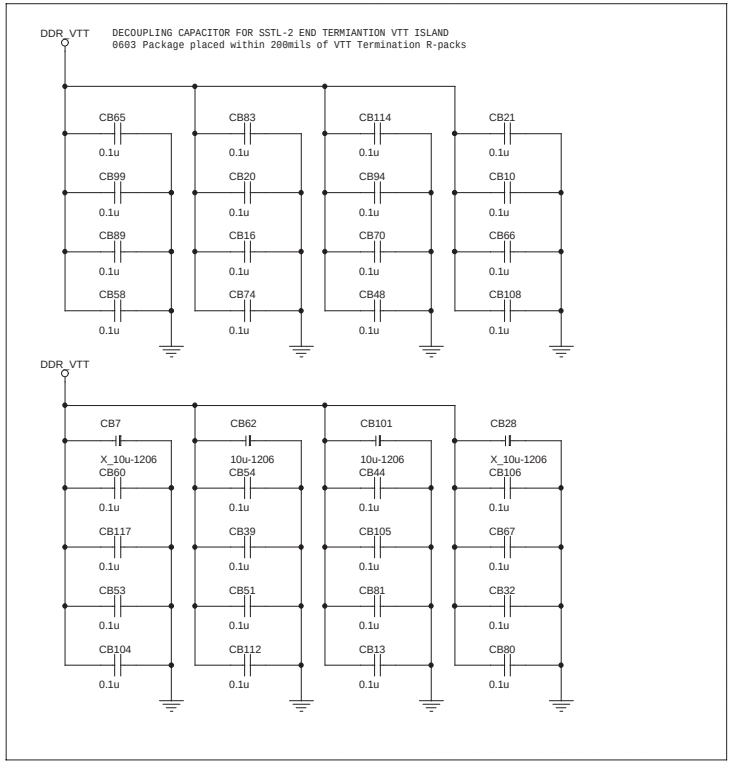

MICRO-STAR INT'L CO.,LTD.

Title	DDR TERMINATOR	
Size	Document Number MS-6575E	Rev 10A
Date: Friday, August 02, 2002	Sheet 11 of 31	

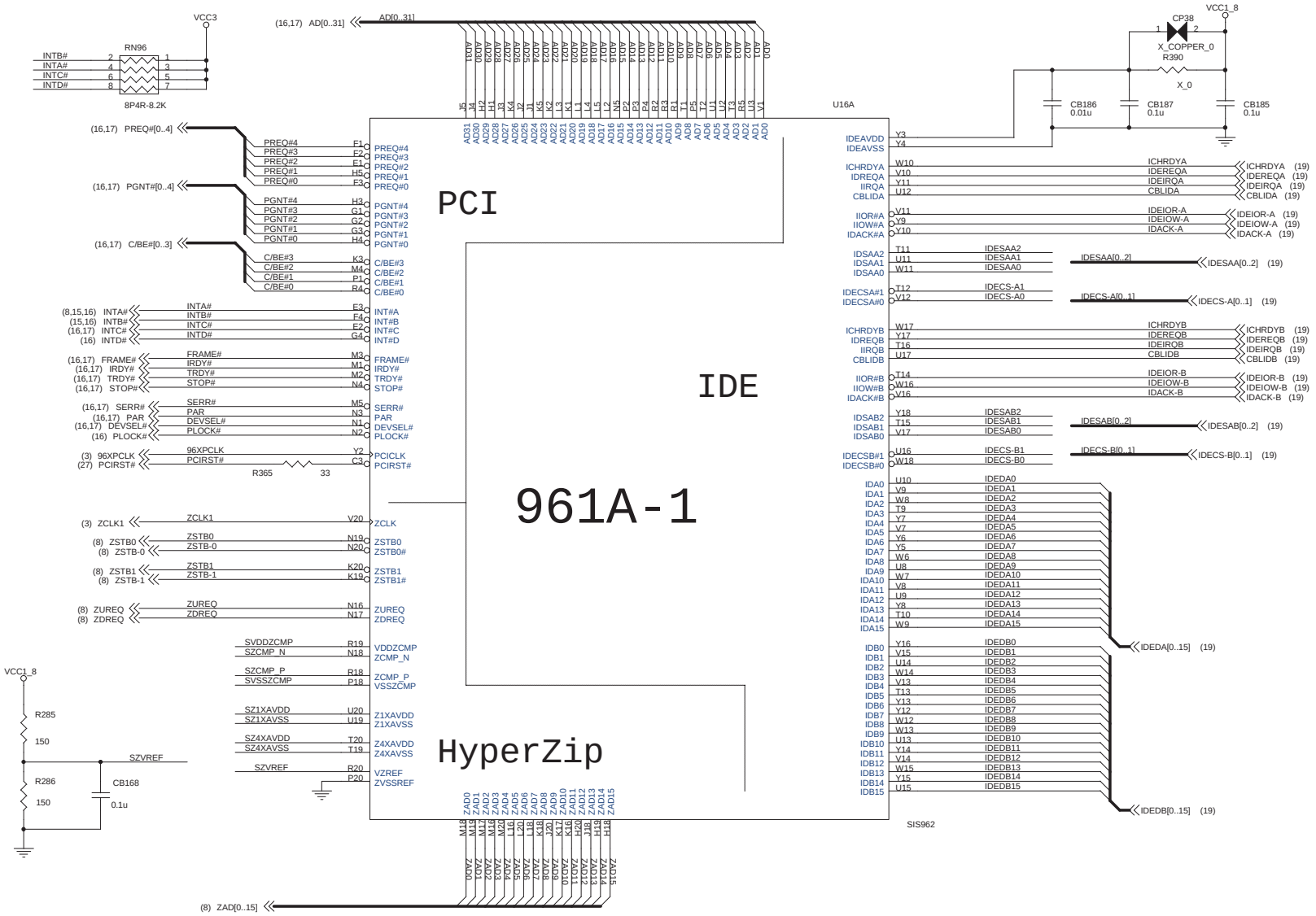

MICRO-STAR INT'L CO.,LTD.

Title	SIS961A-1	
Size	Document Number MS-6575E	Rev 10A
Date: Friday, August 02, 2002	Sheet 12 of 31	

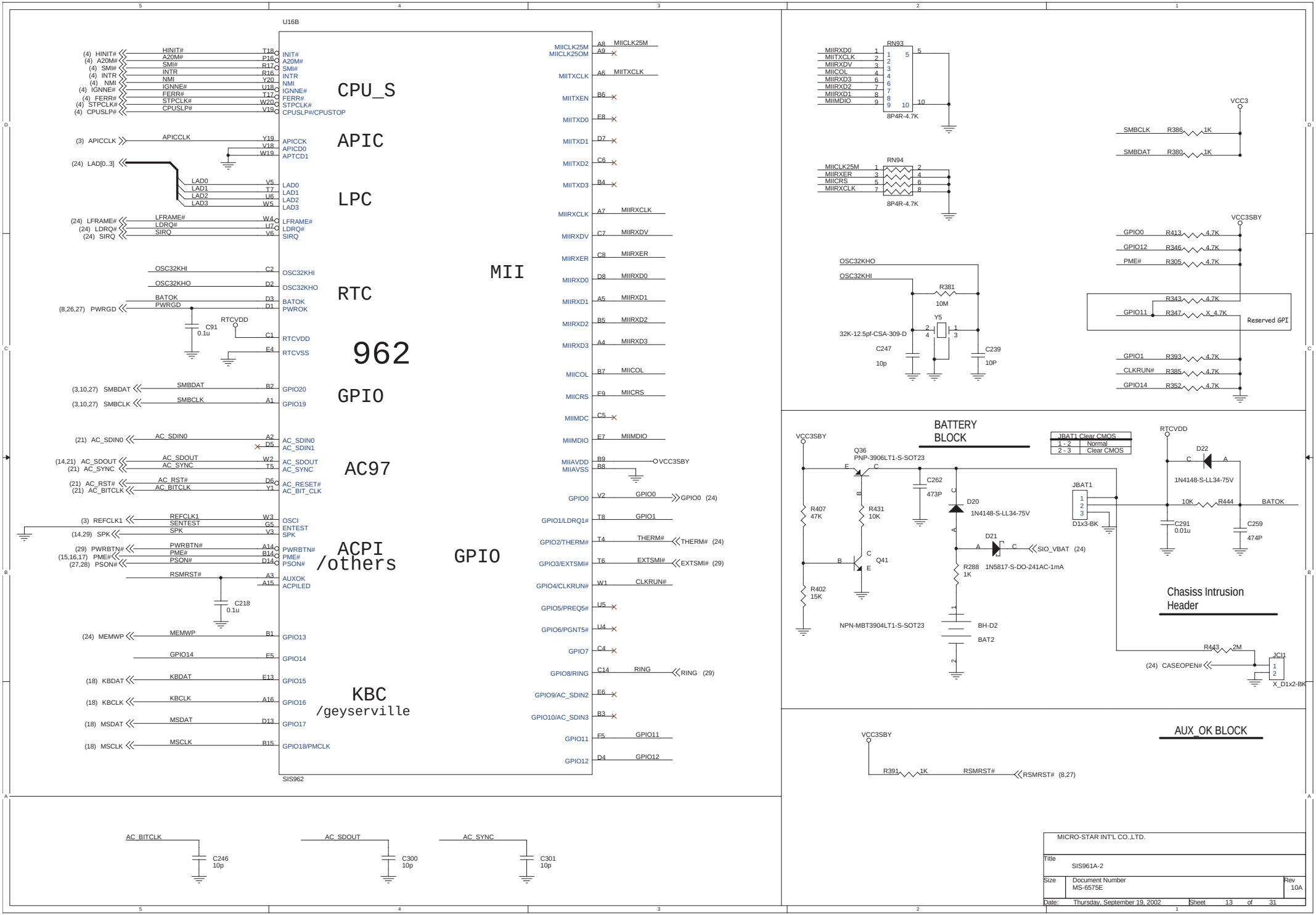
U16B
CPU_S
APIC
LPC
RTC
962
GPIO
AC97
ACPI /others
KBC /geyserville
MII
GPIO
SIS962
(4) HINIT#
(4) A20M#
(4) SMI#
(4) INTR
(4) NMI
(4) IGNNE#
(4) FERR#
(4) STPCLK#
(4) CPUSLP#
(3) APICCLK
(24) LAD[0..3]
(24) LFRAME#
(24) LDRQ#
(24) SIRQ
OSC32KHI
OSC32KHO
BATOK
(8,26,27) PWRGD
C91 0.1u
RTCVDD
(3,10,27) SMBDAT
(3,10,27) SMBCLK
(21) AC_SDIN0
(14,21) AC_SDOUT
(21) AC_SYNC
(21) AC_RST#
(21) AC_BITCLK
(3) REFCLK1
(14,29) SPK
(29) PWRBTN#
(15,16,17) PME#
(27,28) PSON#
RSMRST#
C218 0.1u
(24) MEMWP
GPIO14
(18) KBDAT
(18) KBCLK
(18) MSDAT
(18) MSCLK
MIICLK25M
MIITXCLK
MIITXEN
MIITXD0
MIITXD1
MIITXD2
MIITXD3
MIIRXCLK
MIIRXDV
MIIRXER
MIIRXD0
MIIRXD1
MIIRXD2
MIIRXD3
MIICOL
MIICRS
MIIMDC
MIIMDIO
MIIAVDD
MIIAVSS
VCC3SBY
GPIO0
GPIO1/LDRQ1#
GPIO2/THERM#
GPIO3/EXTSMI#
GPIO4/CLKRUN#
GPIO5/PREQ5#
GPIO6/PGNT5#
GPIO7
GPIO8/RING
GPIO9/AC_SDIN2
GPIO10/AC_SDIN3
GPIO11
GPIO12
THERM# (24)
EXTSMI# (29)
RING (29)
AC_BITCLK
C246 10p
AC_SDOUT
C300 10p
AC_SYNC
C301 10p
RN93
8P4R-4.7K
RN94
8P4R-4.7K
R381 10M
Y5
32K-12.5pf-CSA-309-D
C247 10p
C239 10P
VCC3
SMBCLK R386 1K
SMBDAT R380 1K
VCC3SBY
GPIO0 R413 4.7K
GPIO12 R346 4.7K
PME# R305 4.7K
R343 4.7K
GPIO11 R347 X_4.7K
Reserved GPI
GPIO1 R393 4.7K
CLKRUN# R385 4.7K
GPIO14 R352 4.7K
BATTERY BLOCK
JBAT1 Clear CMOS
1 - 2 Normal
2 - 3 Clear CMOS
Q36 PNP-3906LT1-S-SOT23
C262 473P
R407 47K
R431 10K
D20 1N4148-S-LL34-75V
JBAT1
D1X3-BK
D21 1N5817-S-DO-241AC-1mA
SIO_VBAT (24)
Q41
R288 1K
R402 15K
NPN-MBT3904LT1-S-SOT23
BH-D2
BAT2
RTCVDD
D22 1N4148-S-LL34-75V
10K R444 BATOK
C291 0.01u
C259 474P
Chasiss Intrusion Header
R443 2M
(24) CASEOPEN#
JCI1
X_D1x2-BK
AUX_OK BLOCK
VCC3SBY
R391 1K RSMRST#
RSMRST# (8,27)
MICRO-STAR INT'L CO.,LTD.
Title
SIS961A-2
Size
Document Number
MS-6575E
Rev
10A
Date: Thursday, September 19, 2002
Sheet 13 of 31

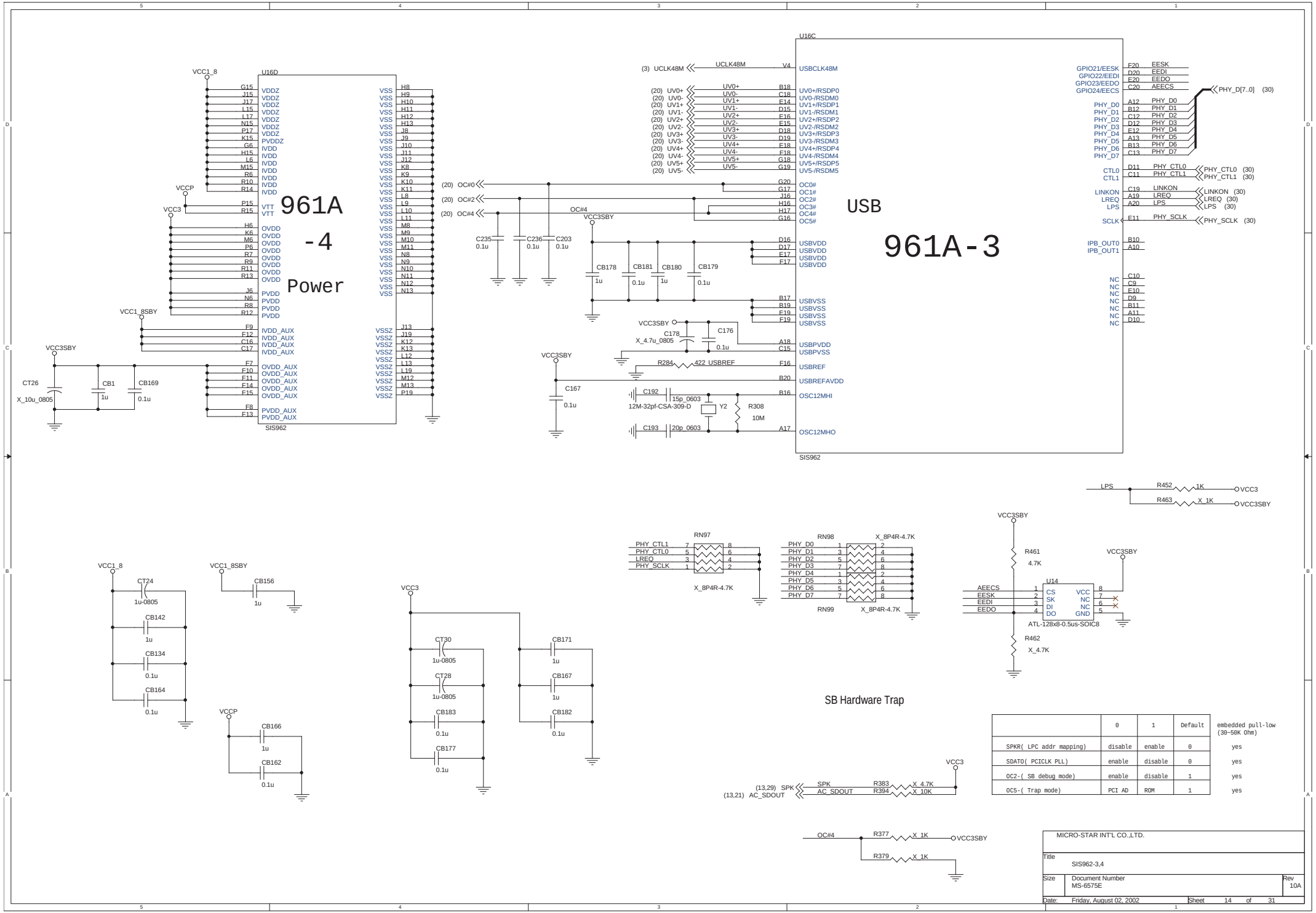

	0	1	Default	embedded pull-low (30-50K Ohm)
SPKR(LPC addr mapping)	disable	enable	0	yes
SDAT0(PCICLK PLL)	enable	disable	0	yes
OC2-(SB debug mode)	enable	disable	1	yes
OC5-(Trap mode)	PCI AD	ROM	1	yes

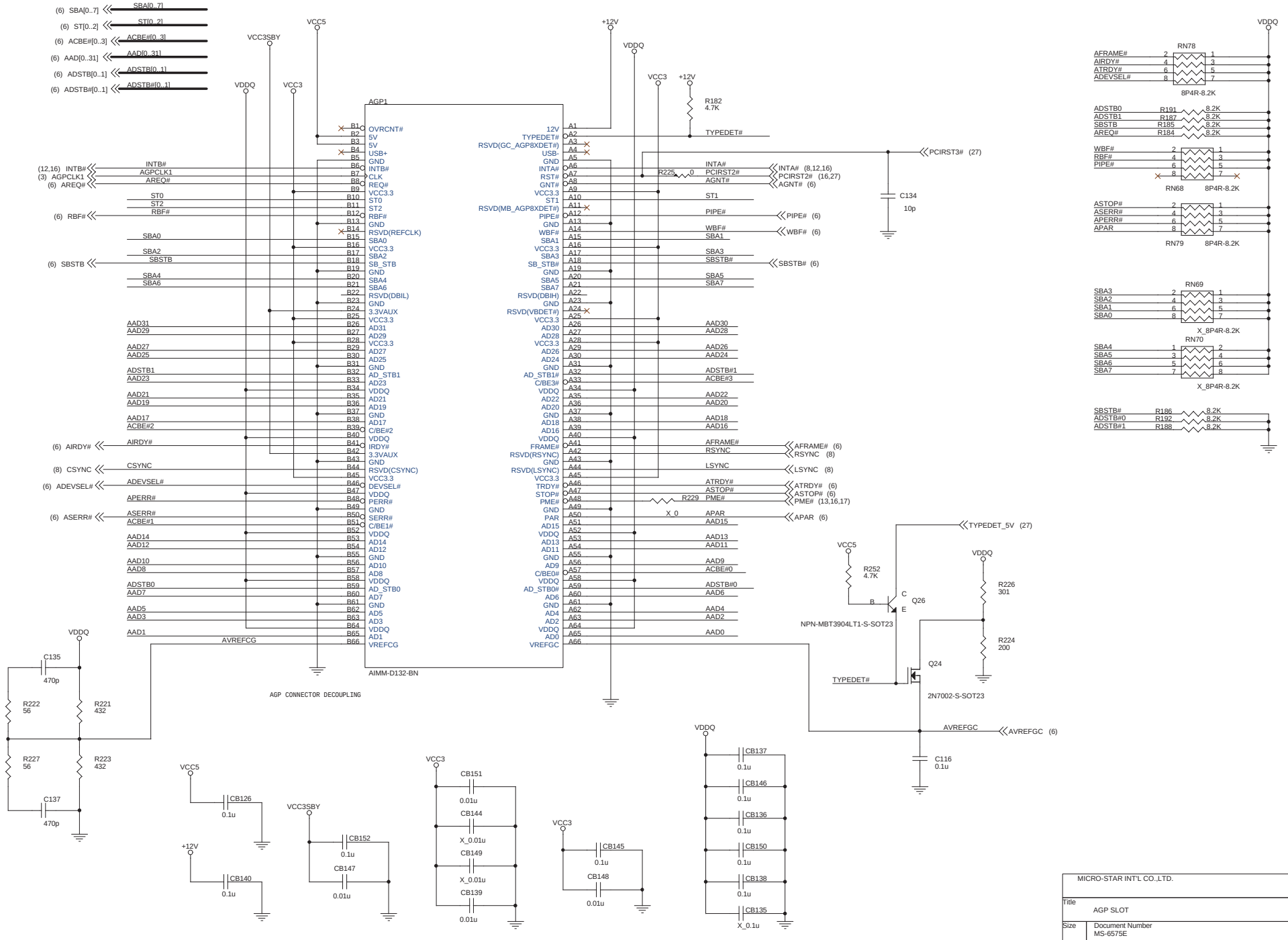

MICRO-STAR INT'L CO.,LTD.

Title	AGP SLOT		
Size	Document Number MS-6575E		Rev 10A
Date: Friday, August 02, 2002	Sheet 15 of 31		

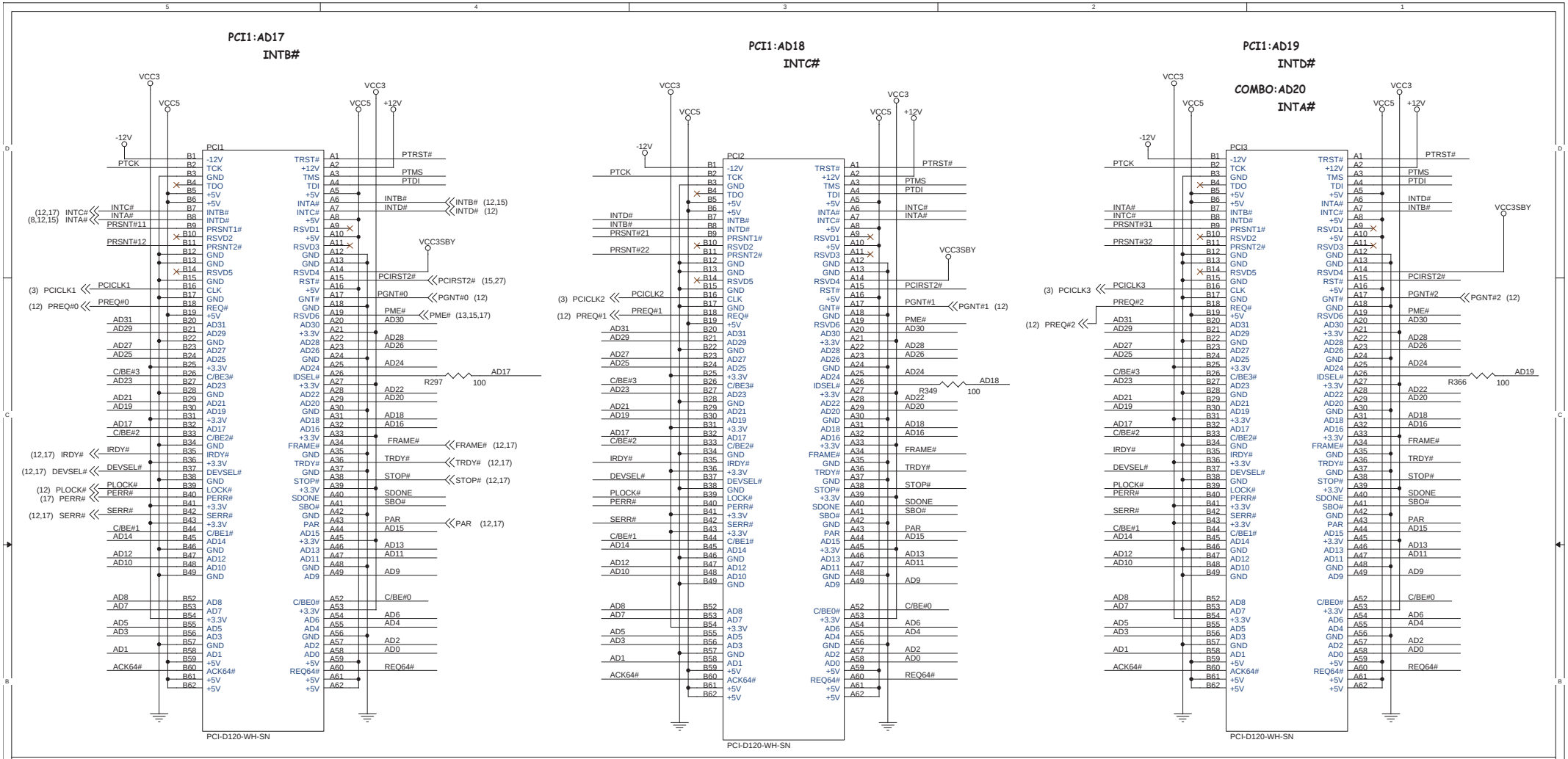

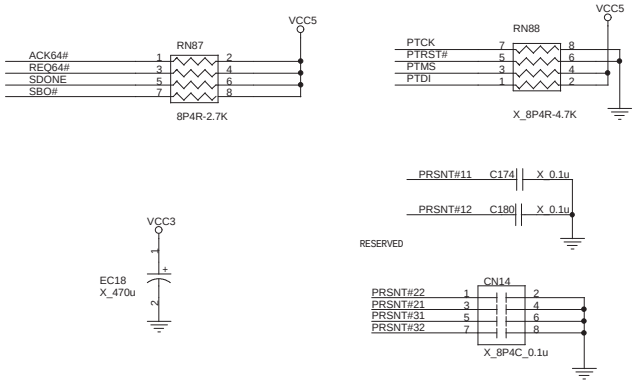

PCI BUS PULL-UP

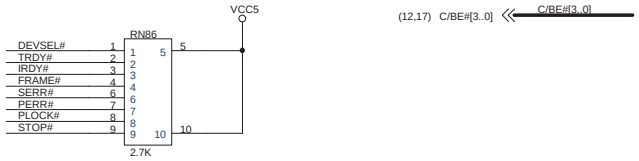

MICRO-STAR INT'L CO.,LTD.		
Title: PCI 1,2,3		
Size	Document Number: MS-6575E	Rev: 10A
Date: Friday, August 02, 2002	Sheet 16 of 31	

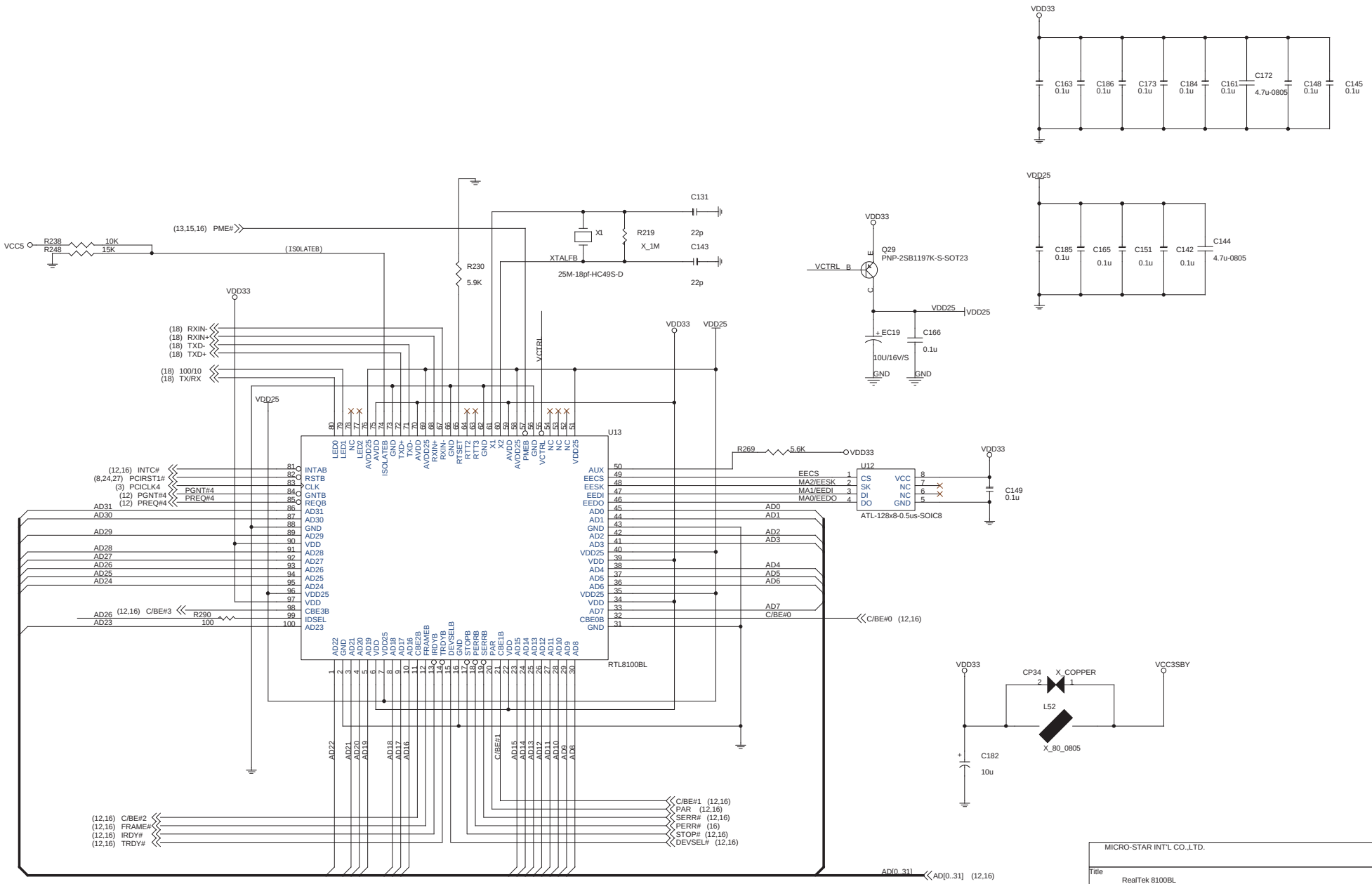

MICRO-STAR INT'L CO.,LTD.		
Title: RealTek 8100BL		
Size	Document Number: MS-6575E	Rev: 10A
Date: Friday, August 02, 2002	Sheet 17 of 31	

KEYBOARD/MOUSE PORTS

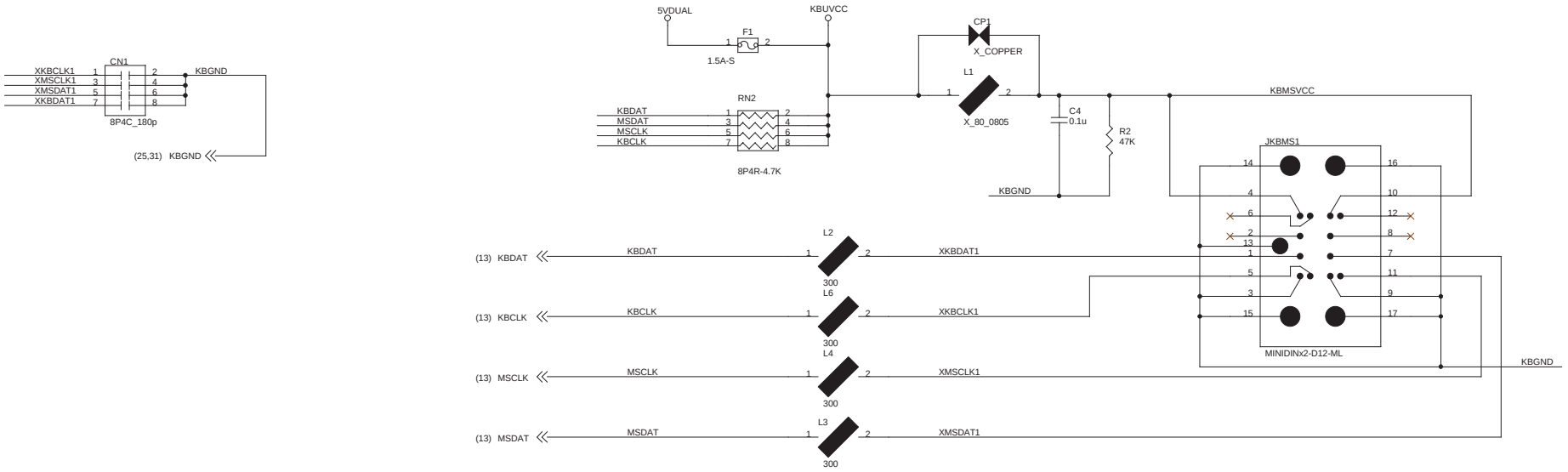

RJ45 CONNECTOR

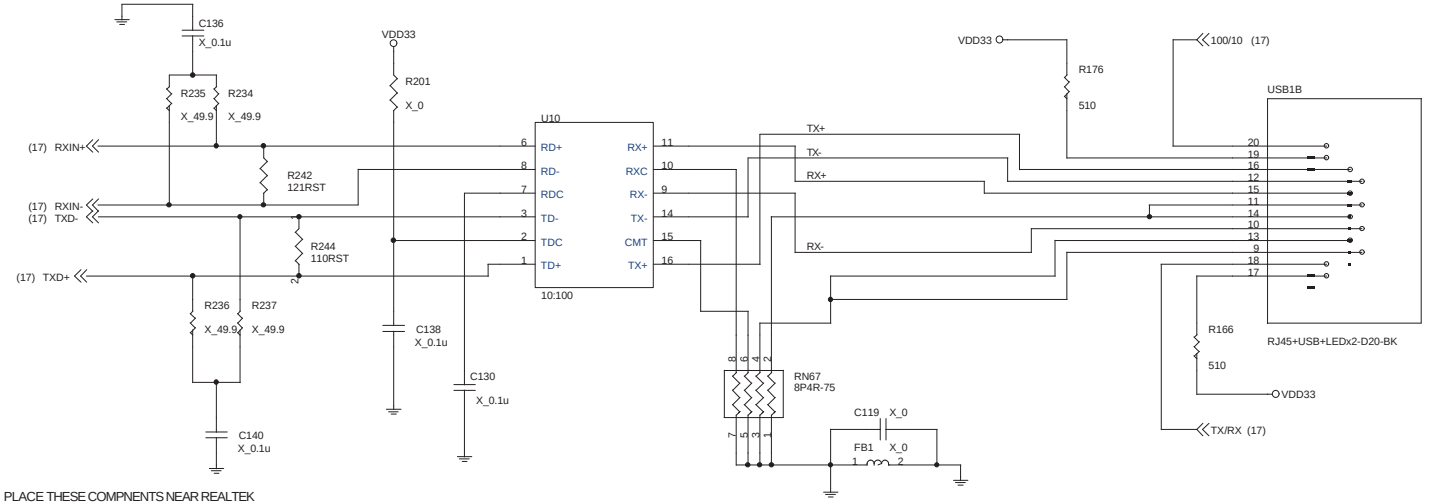

PLACE THESE COMPNENTS NEAR REALTEK 8100BL

MICRO-STAR INT'L CO.,LTD.			
Title: RJ45 & PS/2			
Size	Document Number MS-6575E		Rev 10A
Date: Friday, August 16, 2002	Sheet 18 of 31		

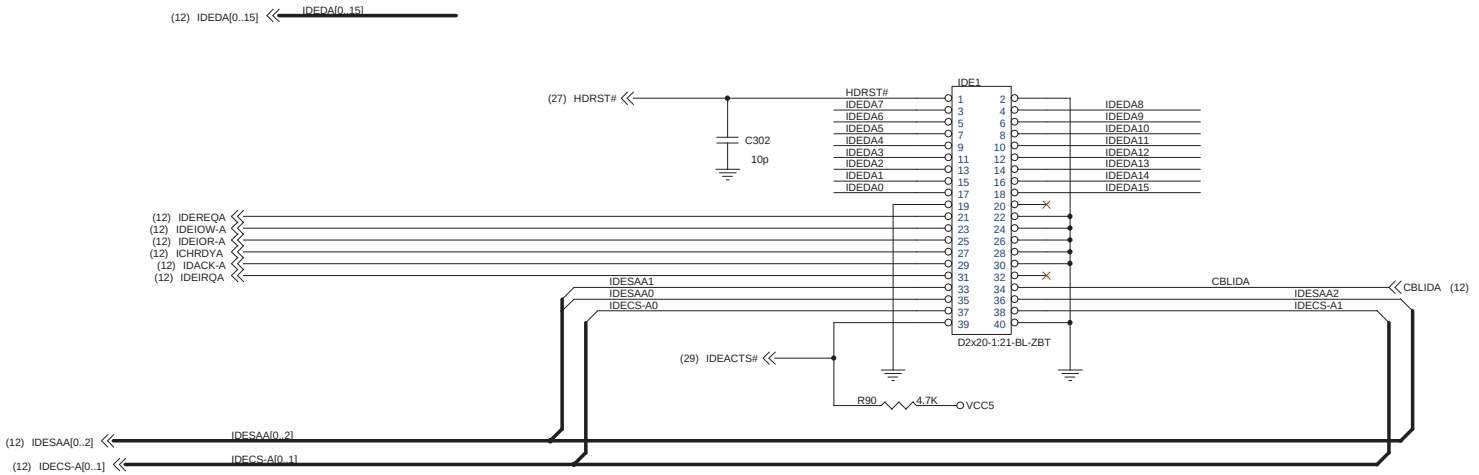

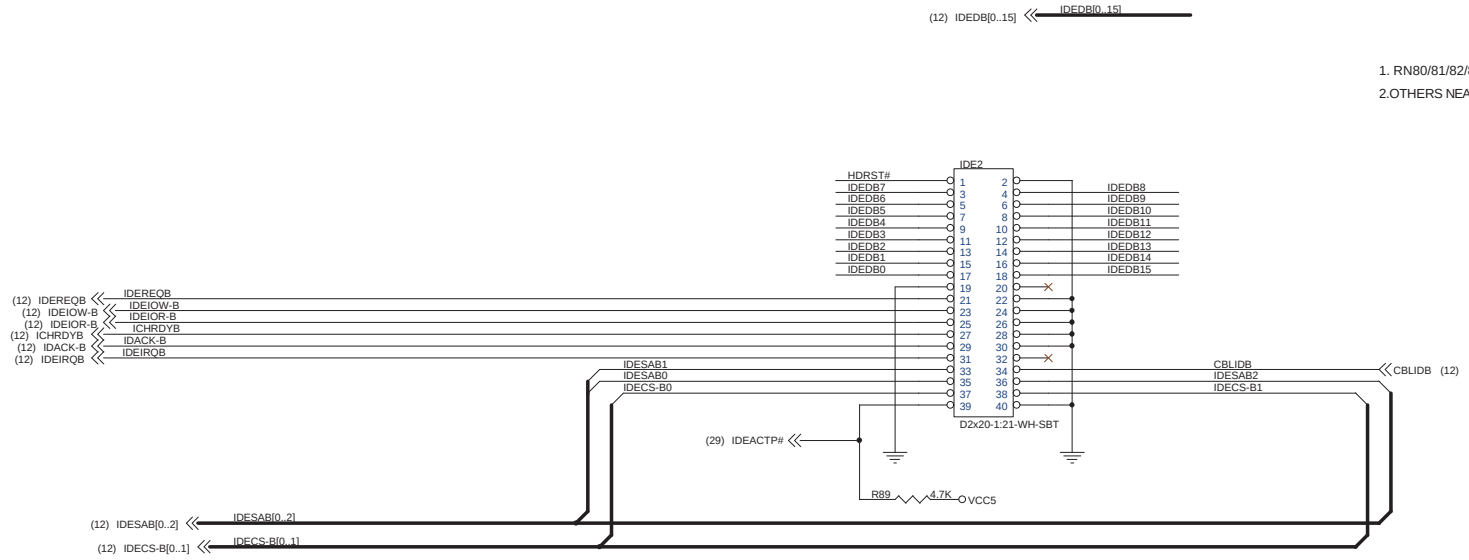

NOTE

1. RN80/81/82/83/88/89/90/92 R275/280/304/312/315/326 NEAR IDE CONNECTOR
2.OTHERS NEAR SIS961A/B

MICRO-STAR INT'L CO.,LTD.		
Title: IDE CONNECTOR		
Size	Document Number MS-6575E	Rev 10A
Date: Friday, August 02, 2002	Sheet 19 of 31	

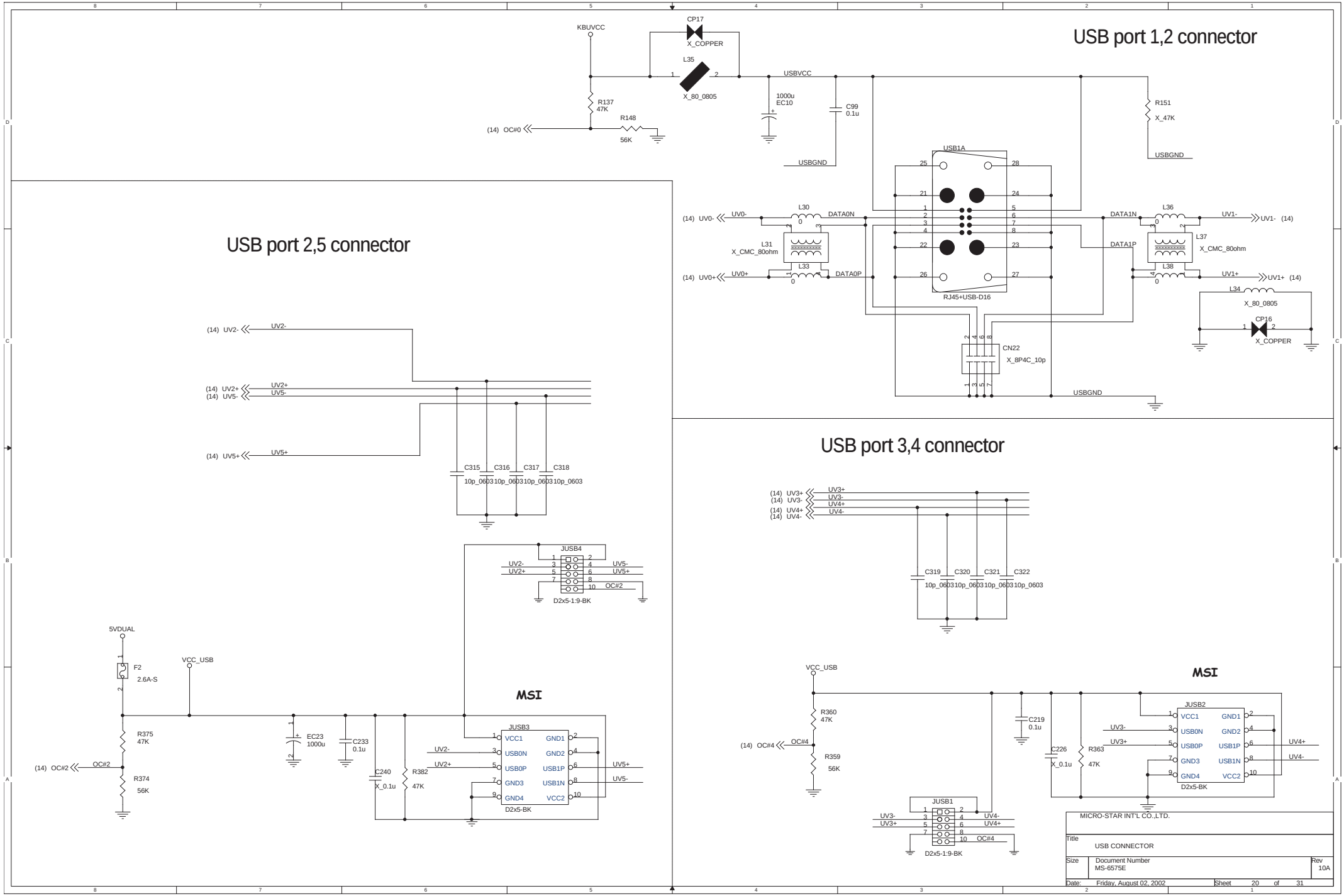
USB port 1,2 connector
USB port 2,5 connector
USB port 3,4 connector
KBUVCC
CP17
X_COPPER
L35
X_80_0805
USBVCC
1000u
EC10
C99
0.1u
R137
47K
R148
56K
(14) OC#0
R151
X_47K
USBGND
USB1A
RJ45+USB-D16
(14) UV0-
UV0-
L30
DATA0N
L31
X_CMC_80ohm
L33
(14) UV0+
UV0+
DATA0P
DATA1N
L36
UV1-
(14) UV1-
DATA1P
L37
X_CMC_80ohm
L38
UV1+
(14) UV1+
L34
X_80_0805
CP16
X_COPPER
CN22
X_8P4C_10p
(14) UV2-
UV2-
(14) UV2+
(14) UV5-
UV2+
UV5-
(14) UV5+
UV5+
C315
C316
C317
C318
10p_0603
JUSB4
UV2-
UV2+
UV5-
UV5+
OC#2
D2x5-1:9-BK
5VDUAL
F2
2.6A-S
VCC_USB
R375
47K
(14) OC#2
OC#2
R374
56K
EC23
1000u
C233
0.1u
C240
X_0.1u
R382
47K
MSI
JUSB3
VCC1
USB0N
USB0P
GND3
GND4
GND1
GND2
USB1P
USB1N
VCC2
D2x5-BK
(14) UV3+
(14) UV3-
(14) UV4+
(14) UV4-
UV3+
UV3-
UV4+
UV4-
C319
C320
C321
C322
VCC_USB
R360
47K
(14) OC#4
OC#4
R359
56K
C219
0.1u
C226
X_0.1u
R363
47K
JUSB2
JUSB1
OC#4
MICRO-STAR INT'L CO.,LTD.
Title
USB CONNECTOR
Size
Document Number
MS-6575E
Rev
10A
Date: Friday, August 02, 2002
Sheet 20 of 31

ALC650/202A AC97 CODEC

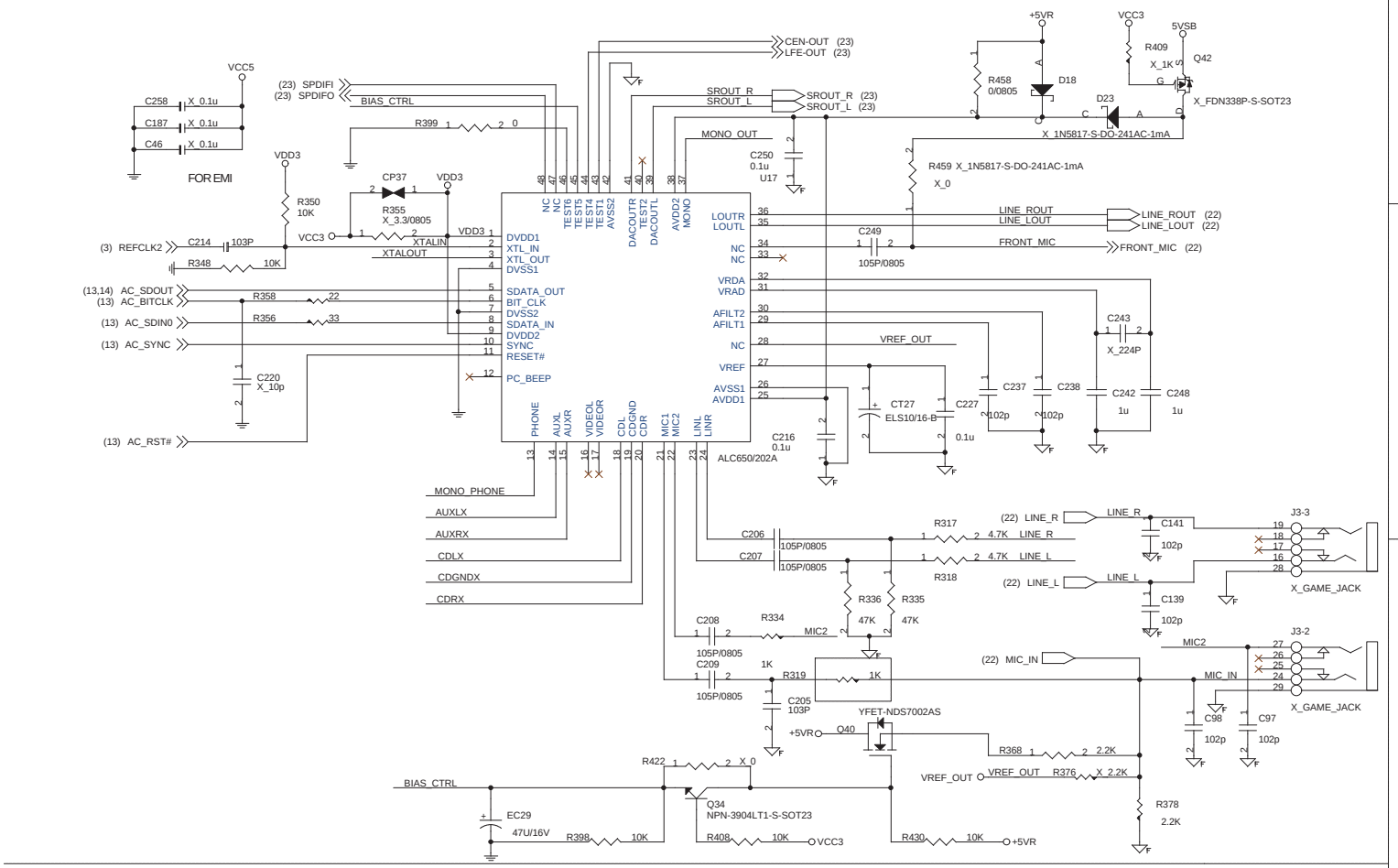

AUDIO CODE CRYSTAL CIRCUIT

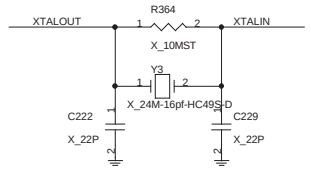

DECOUPLING CAPACITOR

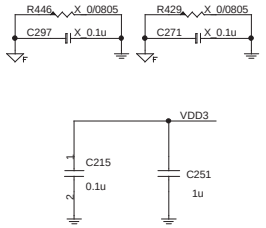

AUDIO CODE REGULATORS

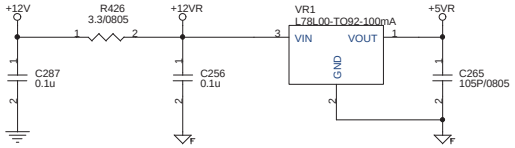

AUDIO CODE CD / AUX / MODEM IN HEADERS

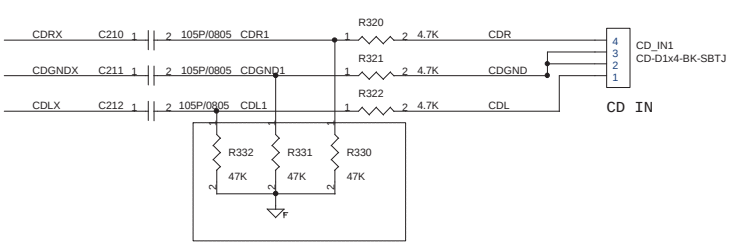

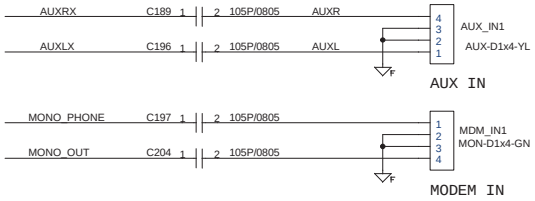

MICRO-STAR INT'L CO.,LTD.			
Title	AC'97 CODEC		
Size	Document Number MS-6575E		Rev 10A
Date: Tuesday, August 13, 2002	Sheet 21 of 31		

SPEAKER OUT CIRCUIT

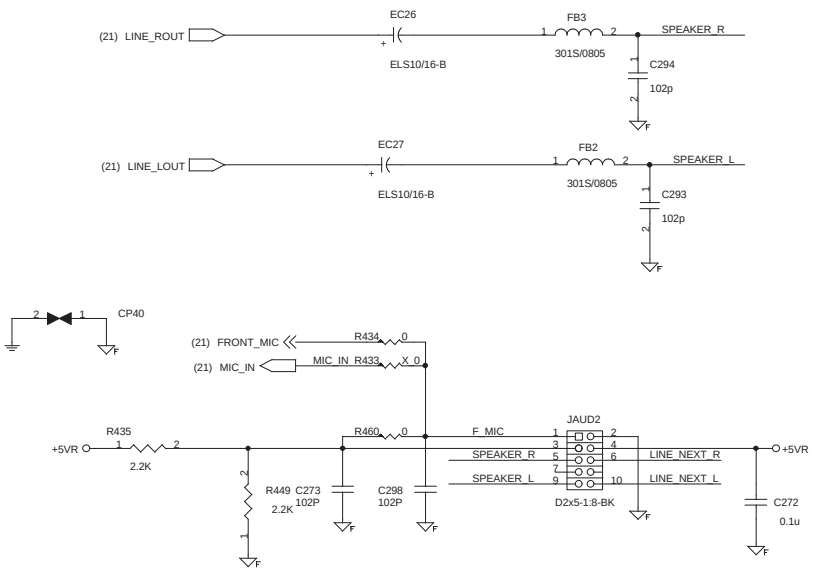

SPEAKER OUT JACK

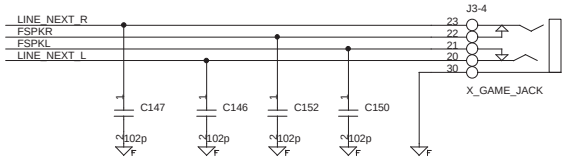

FOR MSI INTERNAL HEADER

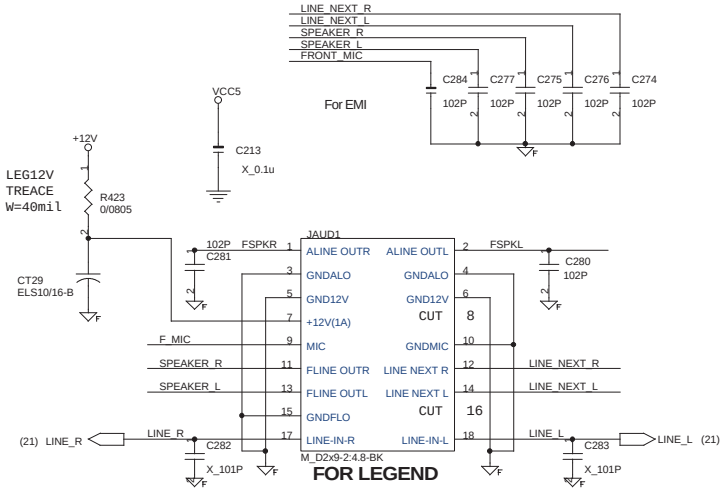

GAME/MIDI CONNECTOR

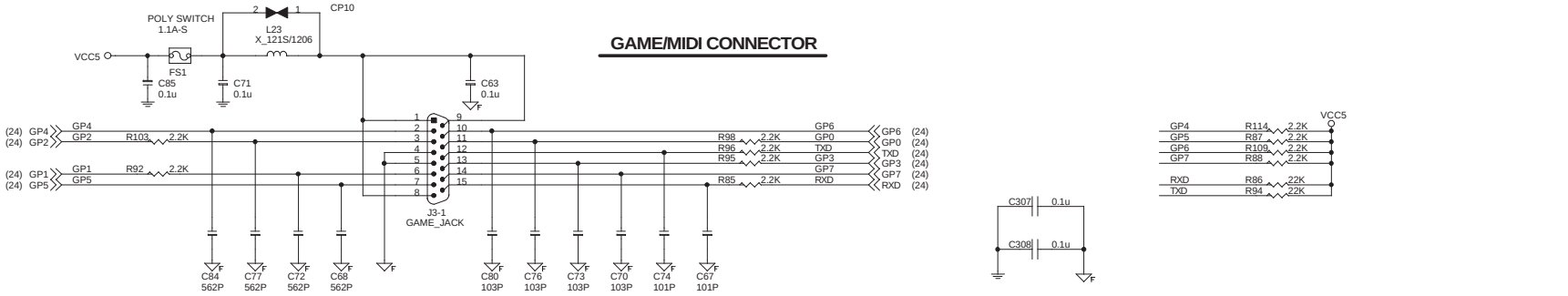

MICRO-STAR INT'L CO.,LTD.		
Title: AUDIO CONNECTOR		
Size	Document Number: MS-6575E	Rev: 10A
Date: Friday, August 02, 2002	Sheet 22 of 31	

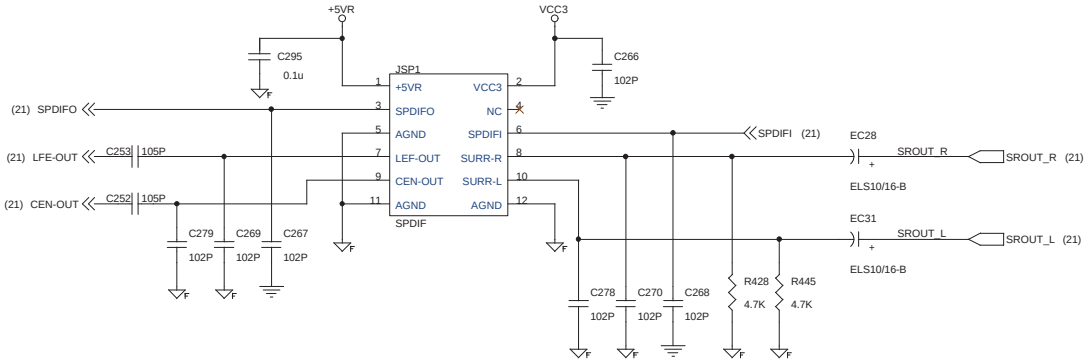

CPU FAN

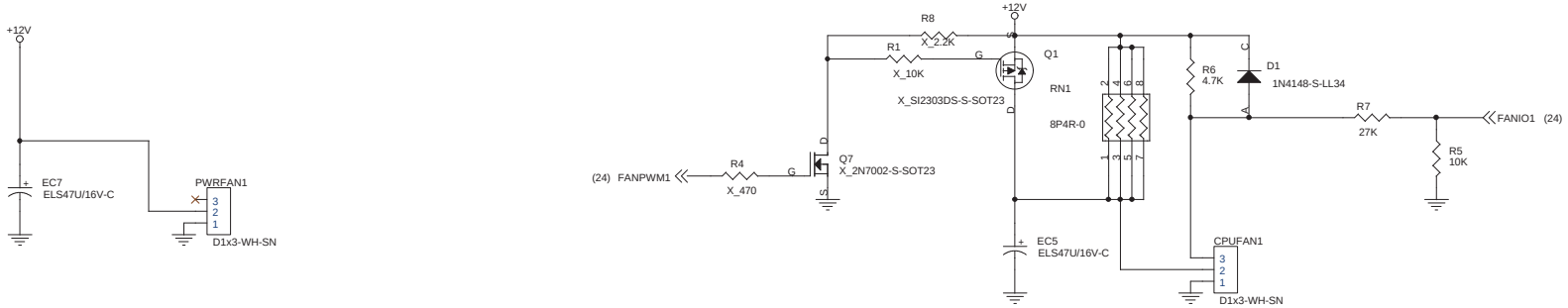

SYSTEM FAN

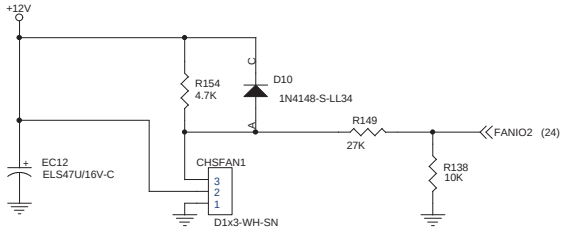

MICRO-STAR INT'L CO.,LTD.		
Title: 6 CHANNEL & FAN		
Size	Document Number: MS-6575E	Rev: 10A
Date: Friday, August 02, 2002	Sheet 23 of 31	

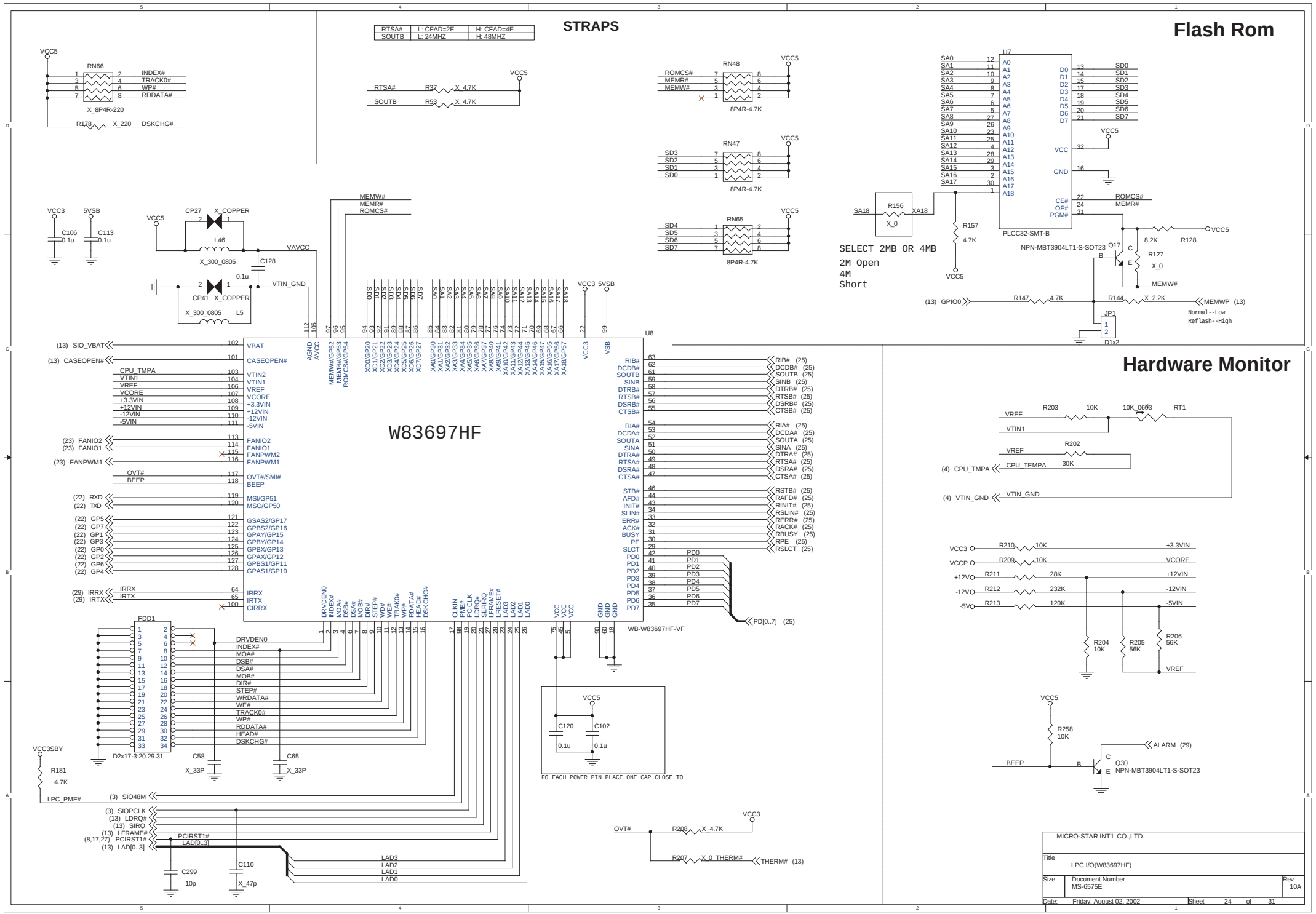
STRAPS
RTSA# L: CFAD=2E H: CFAD=4E
SOUTB L: 24MHZ H: 48MHZ
Flash Rom
SELECT 2MB OR 4MB
2M Open
4M
Short
W83697HF
WB-W83697HF-VF
Hardware Monitor
MICRO-STAR INT'L CO.,LTD.
Title
LPC I/O(W83697HF)
Size
Document Number
MS-6575E
Rev
10A
Date: Friday, August 02, 2002
Sheet 24 of 31

Parallel Port

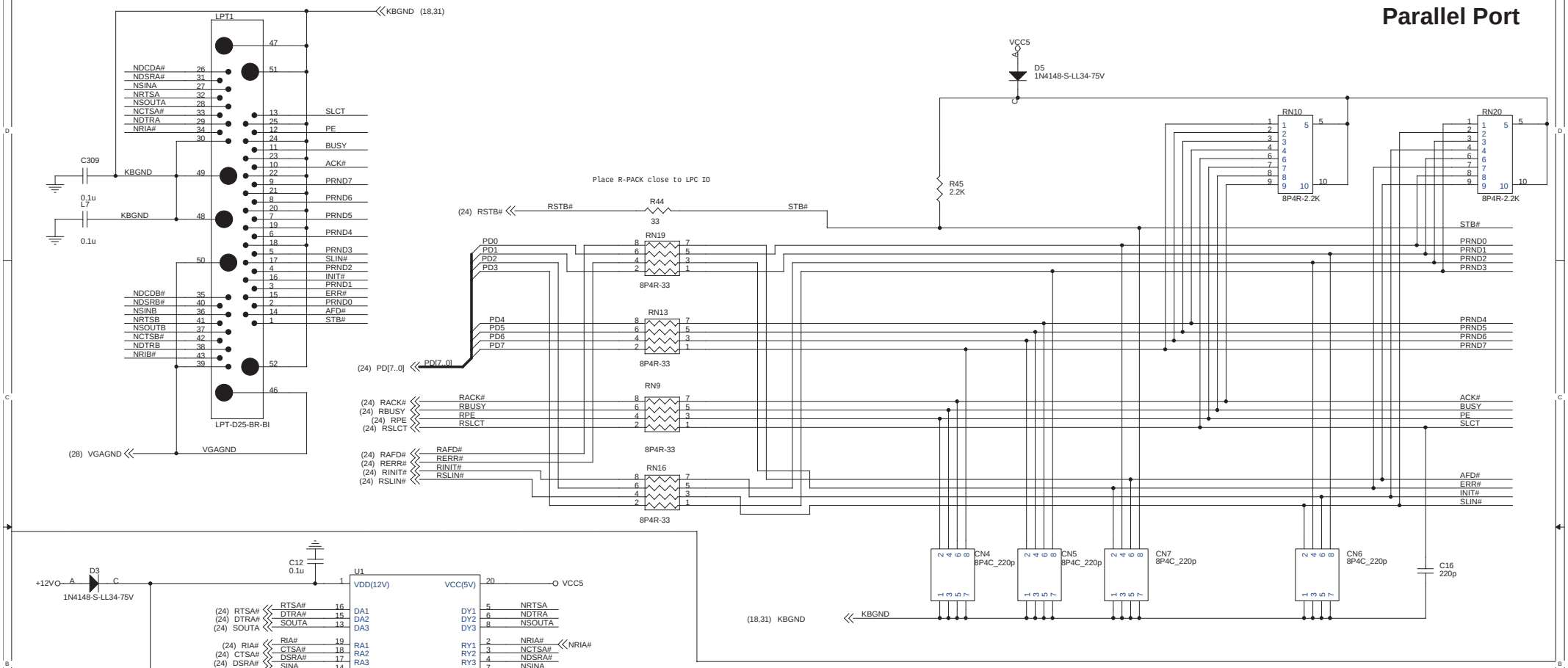

Serial Port

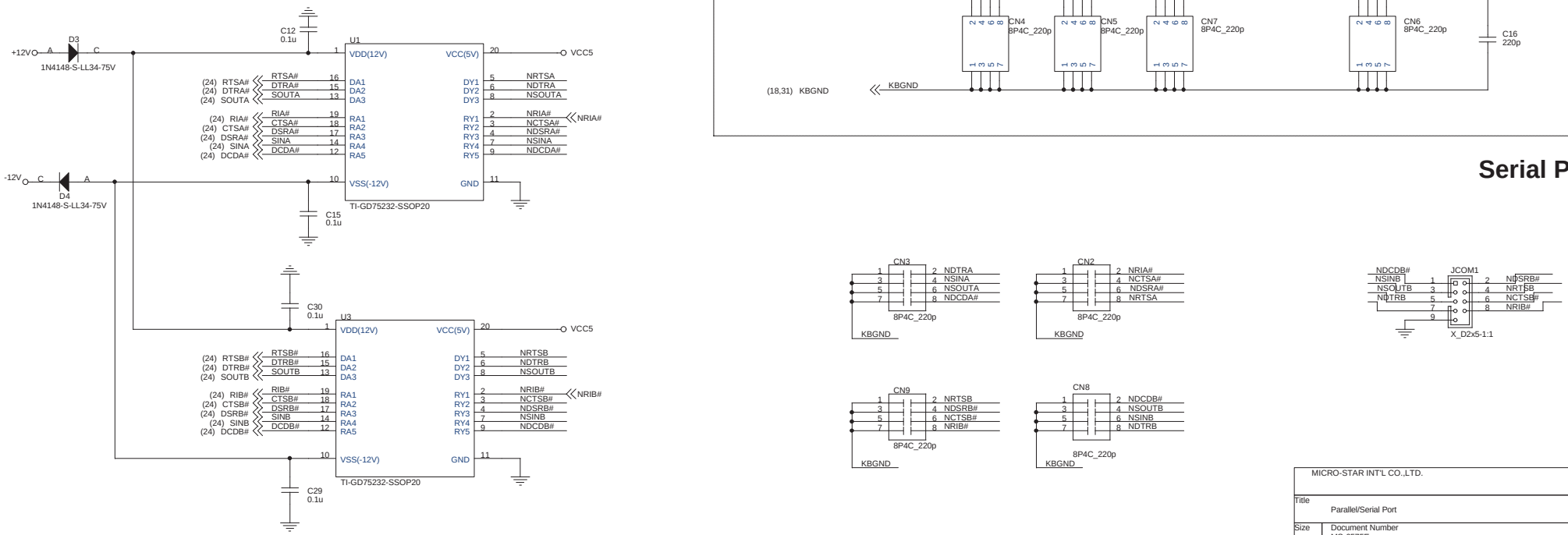

MICRO-STAR INT'L CO.,LTD.		
Title: Parallel/Serial Port		
Size	Document Number: MS-6575E	Rev: 10A
Date: Friday, August 02, 2002	Sheet 25 of 31	

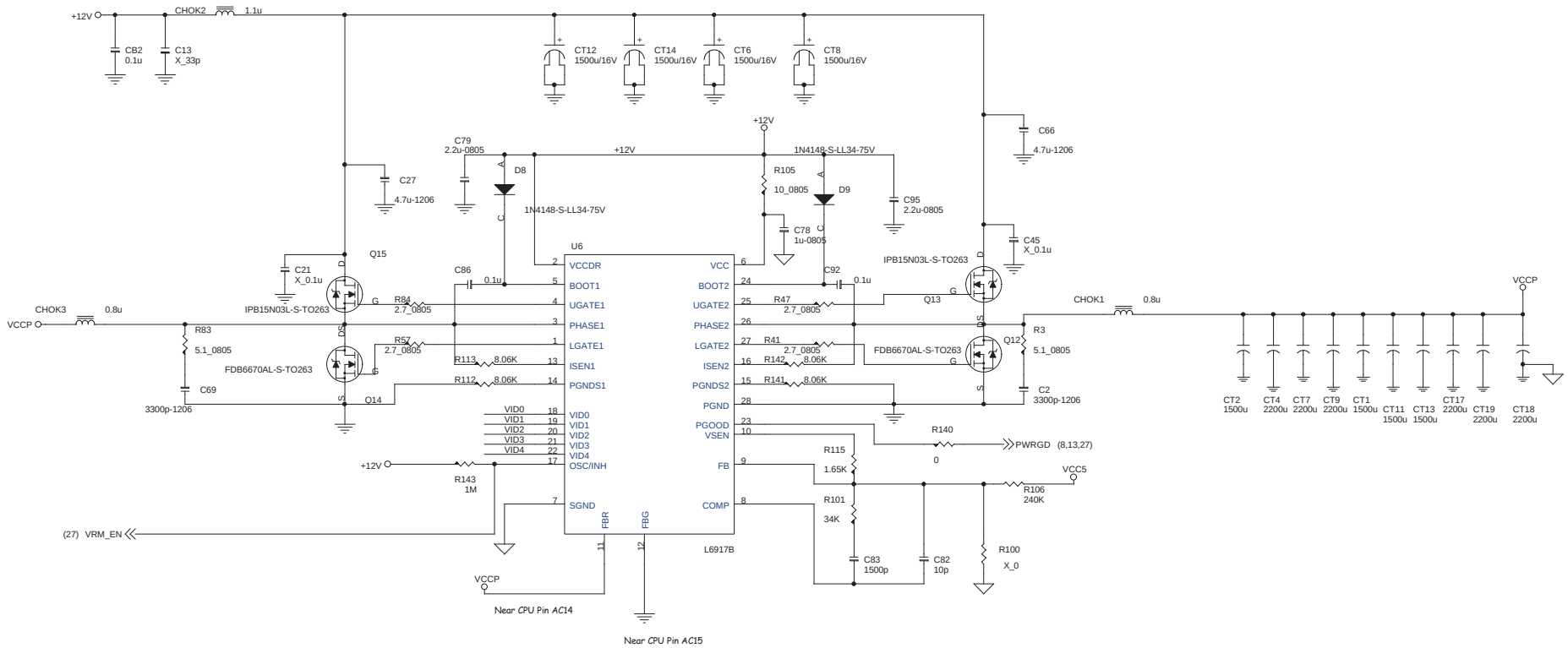

VID PULL-UP RESISTORS

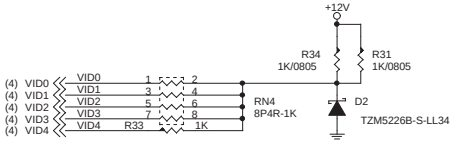

ATX12V POWER CONNECTOR

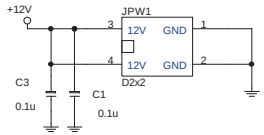

MICRO-STAR INT'L CO.,LTD.		
Title: VRM 9.0		
Size	Document Number: MS-6575E	Rev: 10A
Date: Friday, August 02, 2002	Sheet 26 of 31	

POWER Bulk Decuping	470UF	1000UF
VCC_DIMM		2
VDDQ		1
VCC5	1	
VCC3		1
5VDUAL		2
DDR_VTT		2
VCC1_8		1
VCC3SBY	1	1
VCC5_SB	1	

SEL0	5VUSB
H	2 MOSFET
L	1 MOSFET

5VUSB USE 2 MOSFET

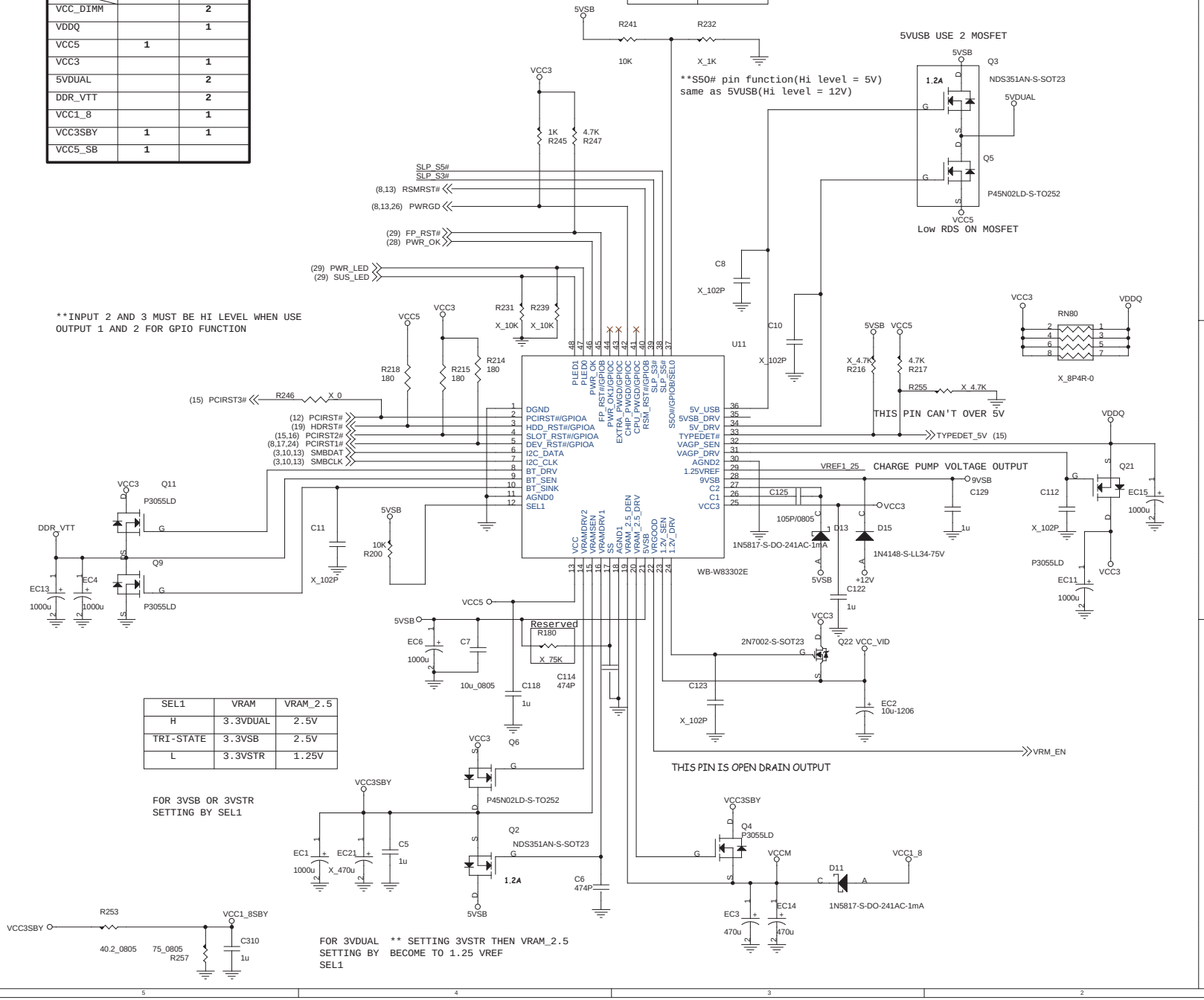

SEL1	VRAM	VRAM_2.5
H	3.3VDUAL	2.5V
TRI-STATE	3.3VSB	2.5V
L	3.3VSTR	1.25V

FOR 3VSB OR 3VSTR
SETTING BY SEL1

FOR 3VDUAL ** SETTING 3VSTR THEN VRAM_2.5
SETTING BY BECOME TO 1.25 VREF
SEL1

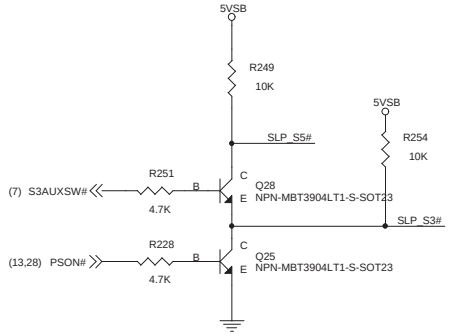

	S0	S3	S5
S3AUXSW#	1	0	1
PSON#	0	1	1
SLP_S5#	1	1	0
SLP_S3#	1	0	0

2.5V POWER TRANSLATOR

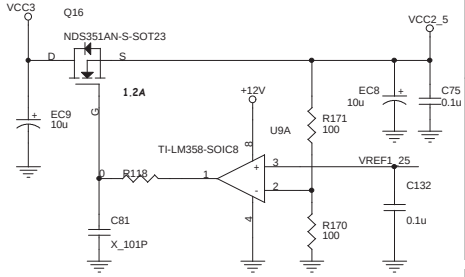

1.8V POWER TRANSLATOR

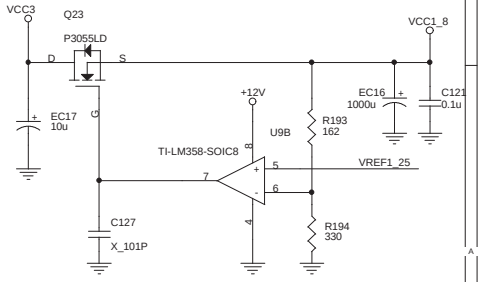

MICRO-STAR INT'L CO.,LTD.		
Title: DECOUPLING CAPACITOR		
Size	Document Number: MS-6575E	Rev: 10A
Date: Friday, August 02, 2002	Sheet 27 of 31	

ATX CONNECTOR

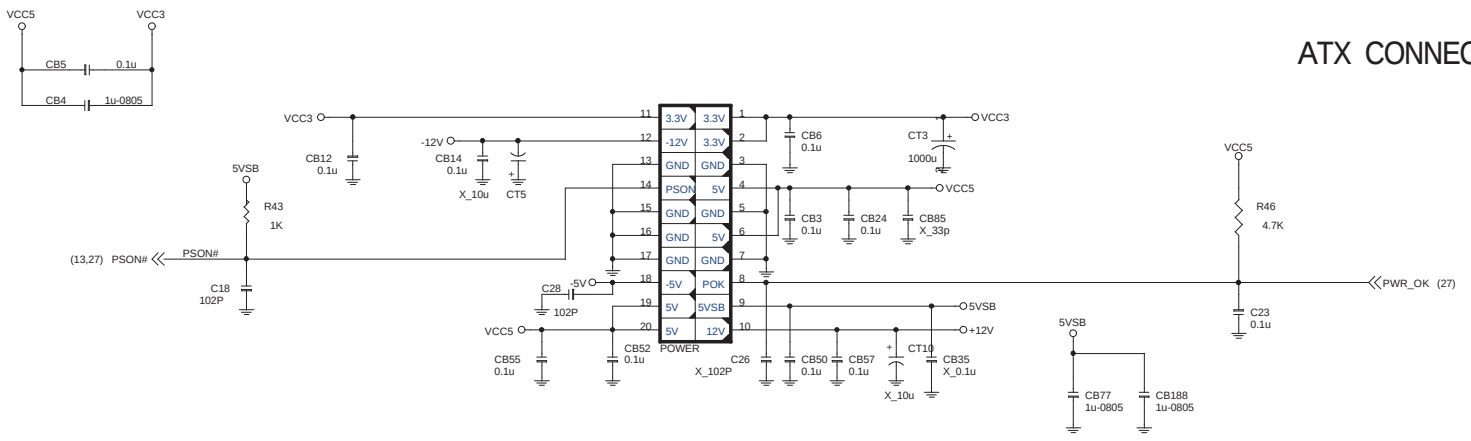

VGA CONNECTOR

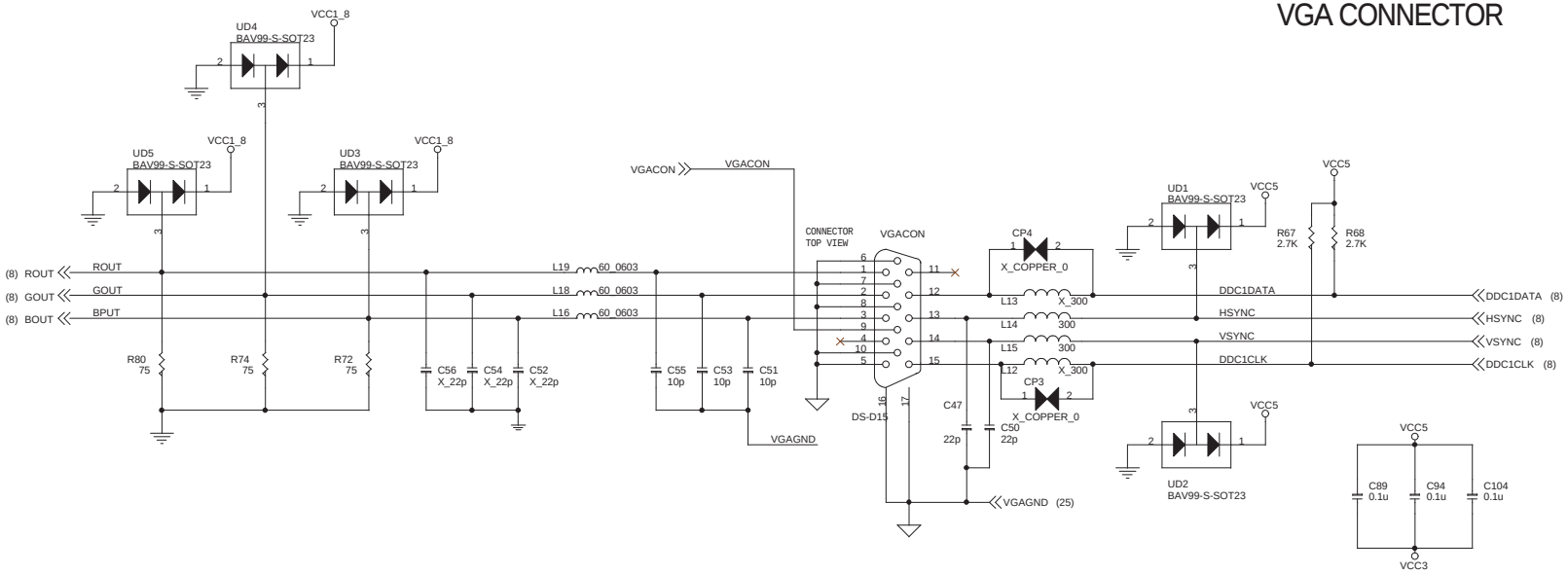

MICRO-STAR INT'L CO.,LTD.		
Title	ATX Power Conn. & VGA Conn.	
Size	Document Number MS-6575E	Rev 10A
Date: Friday, August 02, 2002	Sheet 28 of 31	

LEGEND FRONT PANEL-M

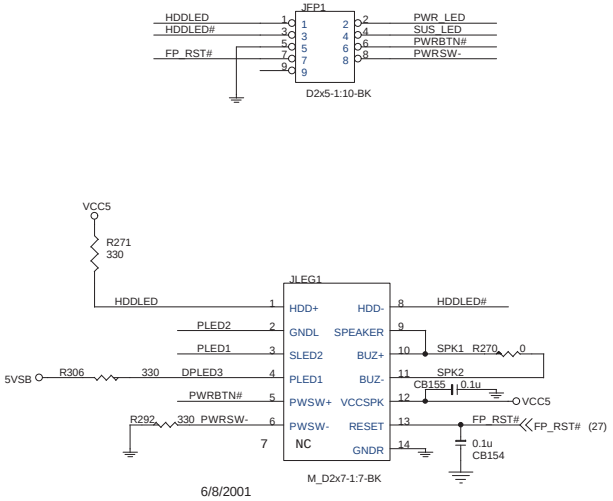

6/8/2001

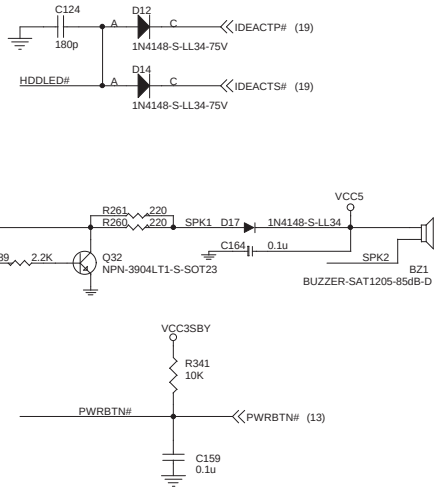

IR HEADER

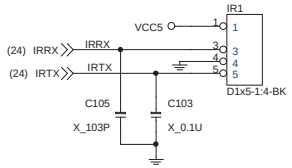

Wake by Modem

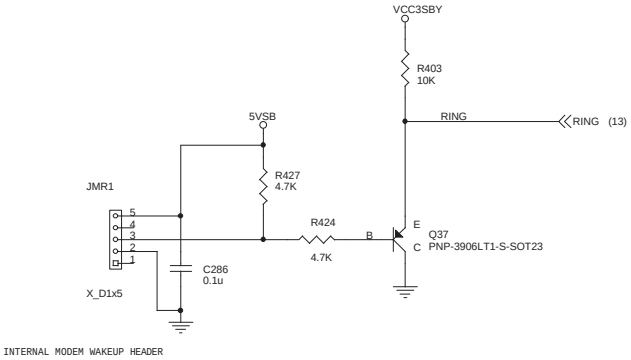

Wake by LAN

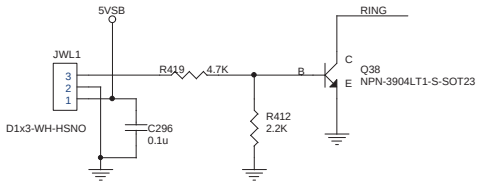

Sleep Button

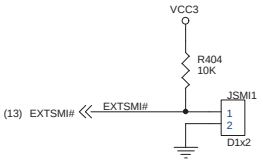

Dual Color LED Block

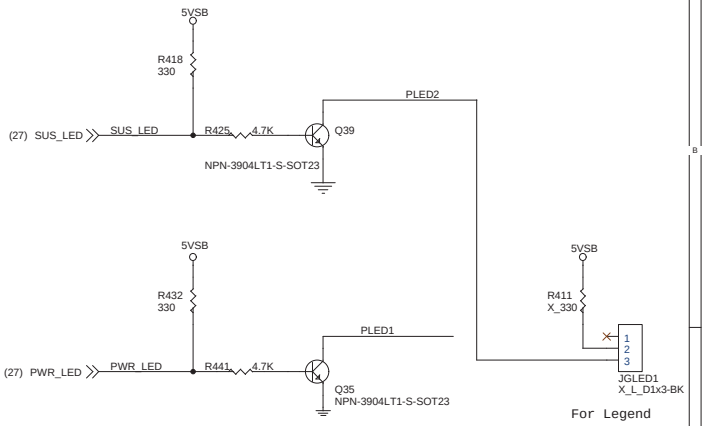

MICRO-STAR INT'L CO.,LTD.		
Title: FRONT PANEL		
Size	Document Number: MS-6575E	Rev: 10A
Date: Monday, September 16, 2002	Sheet 29 of 31	

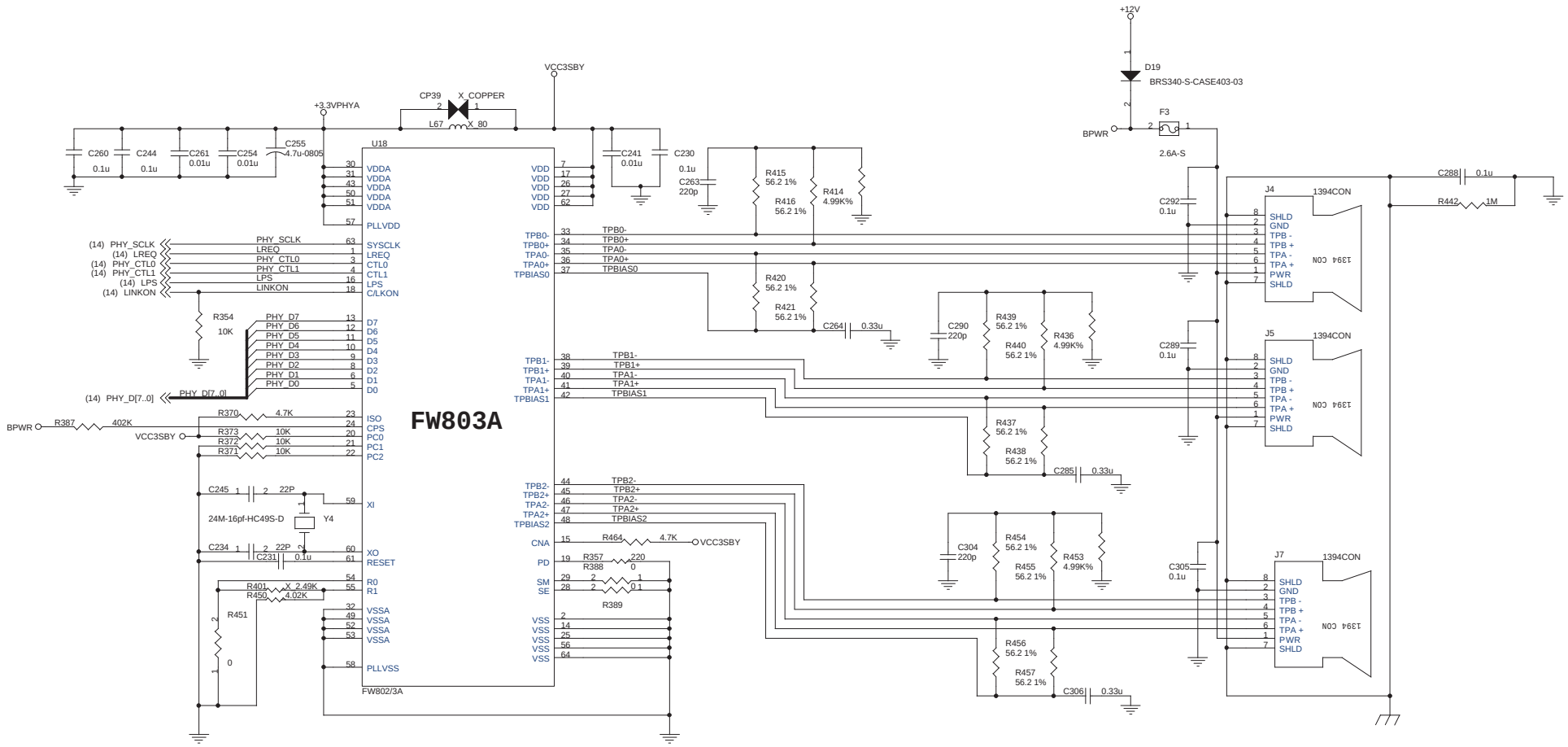

MICRO-STAR INT'L CO.,LTD.			
Title	IEEE 1394		
Size	Document Number MS-6575E		Rev 10A
Date: Monday, September 16, 2002	Sheet 30 of 31		

JBAT1 Clear CMOS	
1 - 2	Normal *
2 - 3	Clear CMOS

JBAT1(1-2)
YJUMPER-MG

MS6575E PCB

PCB
MS-6575E-10A

COM1
YCN9M-1

COM2
YCN9M-1

C231(+) 499KST

BAT SOCKET

BAT1

U7_A
PLCC32-SMT-B

LEGEND AUDIO

J(KKK)
JC-D2x2-GN

J6
D2x5-1:1

INTEL AUDIO

JAUD2(AF)
YJUMPER-MG

JAUD2(AG)
YJUMPER-MG

U16[A]
SIS-962L

U16_H
HEATSINK

U5(A)
SIS-645DX

U5_H
HEATSINK

BIOS WRITE PROTECT

JP1(2)
YJUMPER-MG

JUSB3_A
D2x5-BK

JUSB2_A
D2x5-BK

USB
UP
DOWN
USBA

U18_B
RTL8801

U18_A
FW803A

Q12_13
MOSHS

Q14_15
MOSHS

System Decoupling Capacitors

+12V: EC20 10u, C224 0.1u, C191 0.1u

VCC5: EC22 X_10u, C223 0.1u, C228 0.1u, C22 0.1u, C179 0.1u, C133 0.1u, C257 0.1u, C14 0.1u

-12V: EC25 10u, C17 0.1u, C188 0.1u

VCC3: EC24 X_10u, C194 0.1u, C225 0.1u, C190 0.1u, C195 0.1u

VCC3SBY: C183 0.1u, C117 0.1u

VCC3: C181 0.1u, C43 0.1u, C64 0.1u

5VSB: C126 0.1u

High Freq. return current decoupling

VCC5 — C175 102P — VCC3

R199 0, R196 0

R198 0, R197 0

MICRO-STAR INT'L CO.,LTD.		
Title: DECOUPLING CAPACITOR		
Size	Document Number: MS-6575E	Rev: 10A
Date: Monday, September 16, 2002	Sheet 31 of 31	