Cover Sheet	1
Block Diagram	2
Clock ICS950218AF & ATA100 IDE CONNECTORS	3
mPGA478-B INTEL CPU Sockets	4 - 5
INTEL Brookdale-G GMCH -- North Bridge	6 - 8
INTEL ICH4 -- South Bridge	9-10
LPC I/O -- SMSC47M157	11
AC'97 Codec / Audio Jack / Front Audio Connector	12
Audio Amplifier	13
DDR DIMM1&2 and DDR Terminator Resistor	14-15
AGP Slot	16
PCI SLOT 1	17
Floppy, KB/MS, Com/Printer Ports	18
USB Connectors	19
Front Panel , ATX Connectors & 1.5V Regulators	20
FWH & CNR Riser	21
VRM 9.0 Regulator (CPU Power)	22
SMBUS Isolation & FAN	23
Intel 82540EM LAN Controller *新增 Ver 0B*	24
W83302D(MS5) ACPI Controller	25
VGA Connector	26

GRIFFON

Version 1.0c

MS-6246	ERP Number	Functiom
MS-6539-10c	501/601-6539-01S	Mainboard
MS-6925-100	501/605-6925-010	Power Buttom/LED board
MS-6977-10A	505/605-6977-01S	PCI Adapter card
MS-6979-100	505/605-6979-01S	Slim type CD-ROM Adapter

INTEL (R) Brookdale-G Chipset
Willamette/Northwood 478pin mPGA-B Processor Schematics

CPU:

Willamette/Northwood mPGA-478B Processor

System Brookdale-G Chipset:

INTEL GMCH (North Bridge) +
INTEL ICH4 (South Bridge)

On Board Chipset:

BIOS -- FWH
AC'97 Codec -- AD1881A
LPC Super I/O -- SMC47M157
Clock Generation -- ICS950218AF
LAN -- 82540EM

Expansion Slots:

AGP SLOT * 1
PCI SLOT * 1

Last Schematic Update Date:

Tuesday, September 03, 2002

Micro Star Restricted Secret

Title	COVER SHEET	Rev
Document Number	MS-6539N1	1.0c
MICRO-STAR INT'L CO.,LTD. No. 69, Li-De St, Jung-He City, Taipei Hsien, Taiwan http://www.msi.com.tw	Last Revision Date:	
	Sheet 1 of 29	

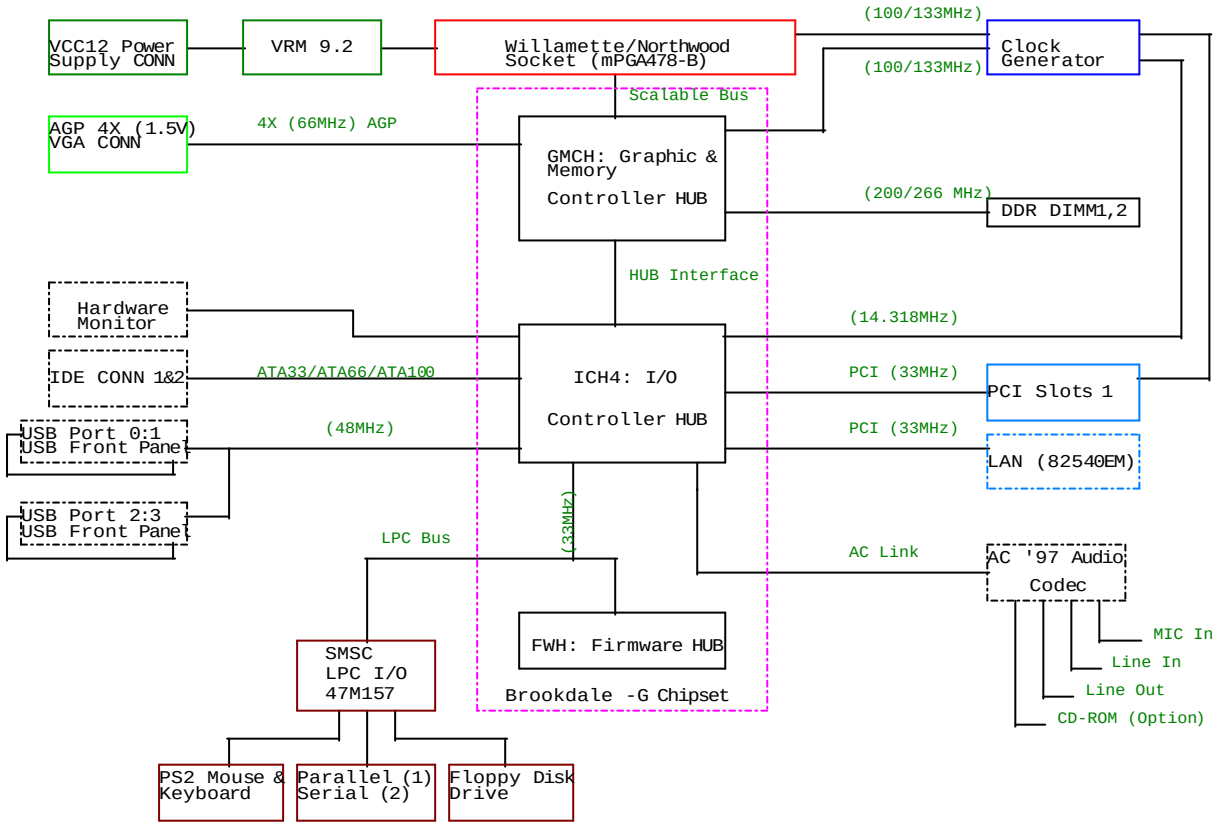

Model option table

Model type	Function	BOM Config	ERP BOM No.

Micro Star Restricted Secret

Title	BLOCK DIAGRAM	Rev
Document Number	MS-6539N1	1.0c
MICRO-STAR INT'L CO.,LTD. No. 69, Li-De St, Jung-He City, Taipei Hsien, Taiwan http://www.msi.com.tw	Last Revision Date: Tuesday, September 03, 2002	
	Sheet 2 of 29	

CLOCK GENERATOR BLOCK

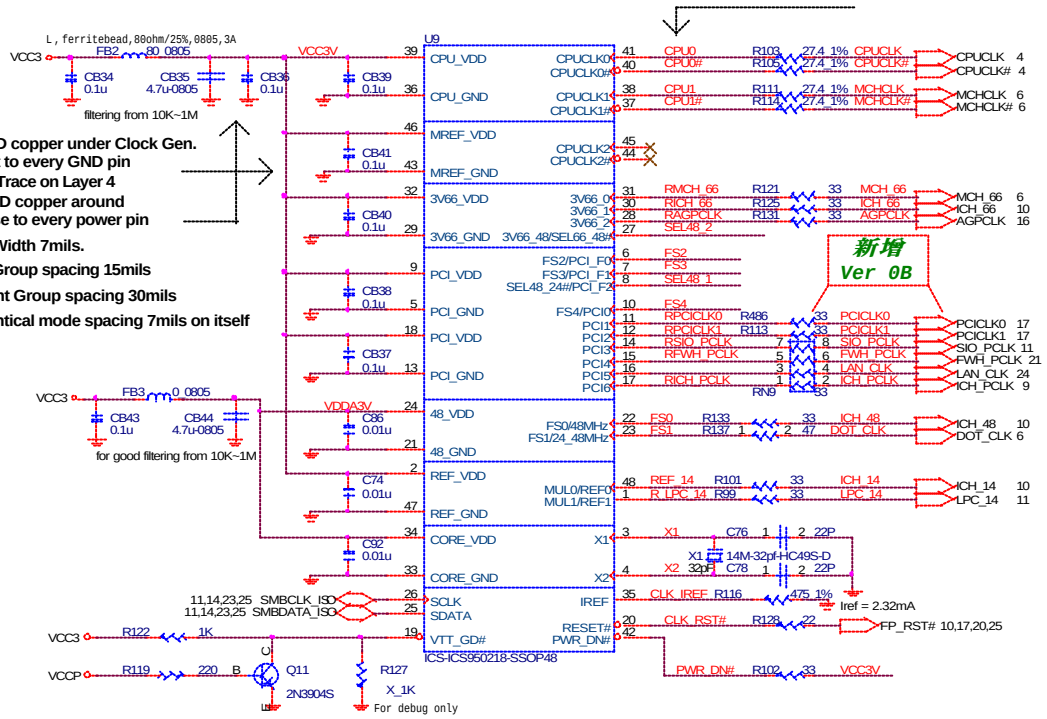

Shut Source Termination Resistors

Trace less 0.2"

49.9ohm for 50ohm M/B impedance

CLOCK STRAPPING RESISTORS

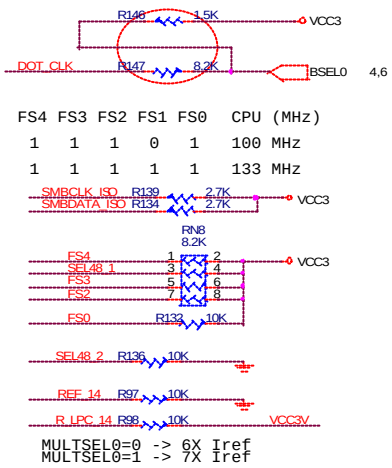

Pull-Down Capacitors

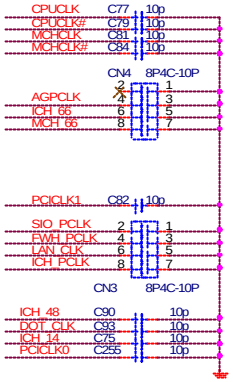

used only for EMI issue

Trace less 0.2"

PRIMARY IDE BLOCK

ATA100 IDE CONNECTORS

5" Notebook type SECONDARY IDE BLOCK

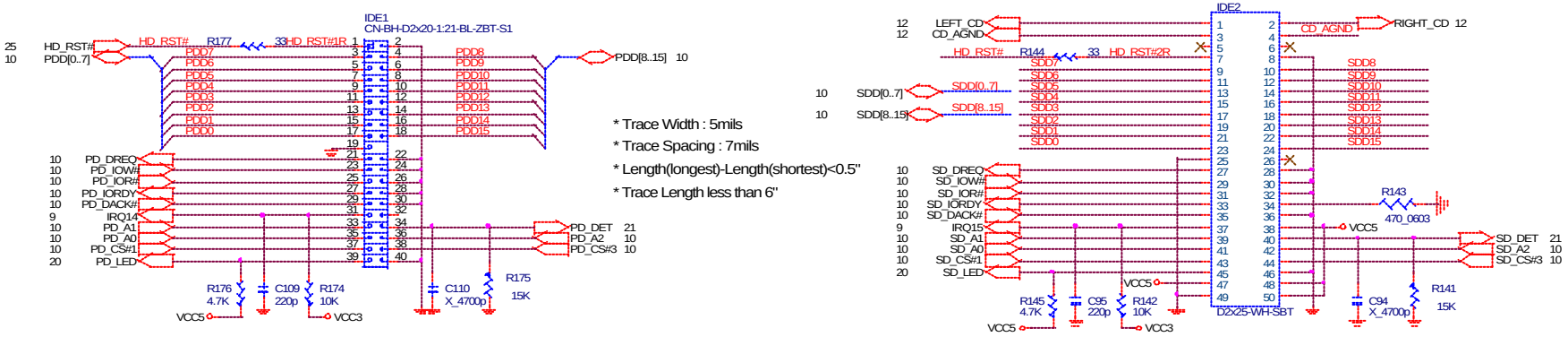

Micro Star Restricted Secret

Title	Clock & IDE Conn.	Rev
Document Number	MS-6539N1	1.0c
MICRO-STAR INT'L CO.,LTD. No. 69, Li-De St, Jung-He City, Taipei Hsien, Taiwan http://www.msi.com.tw	Last Revision Date: Tuesday, September 03, 2002	
	Sheet 3 of 29	

CPU SIGNAL BLOCK

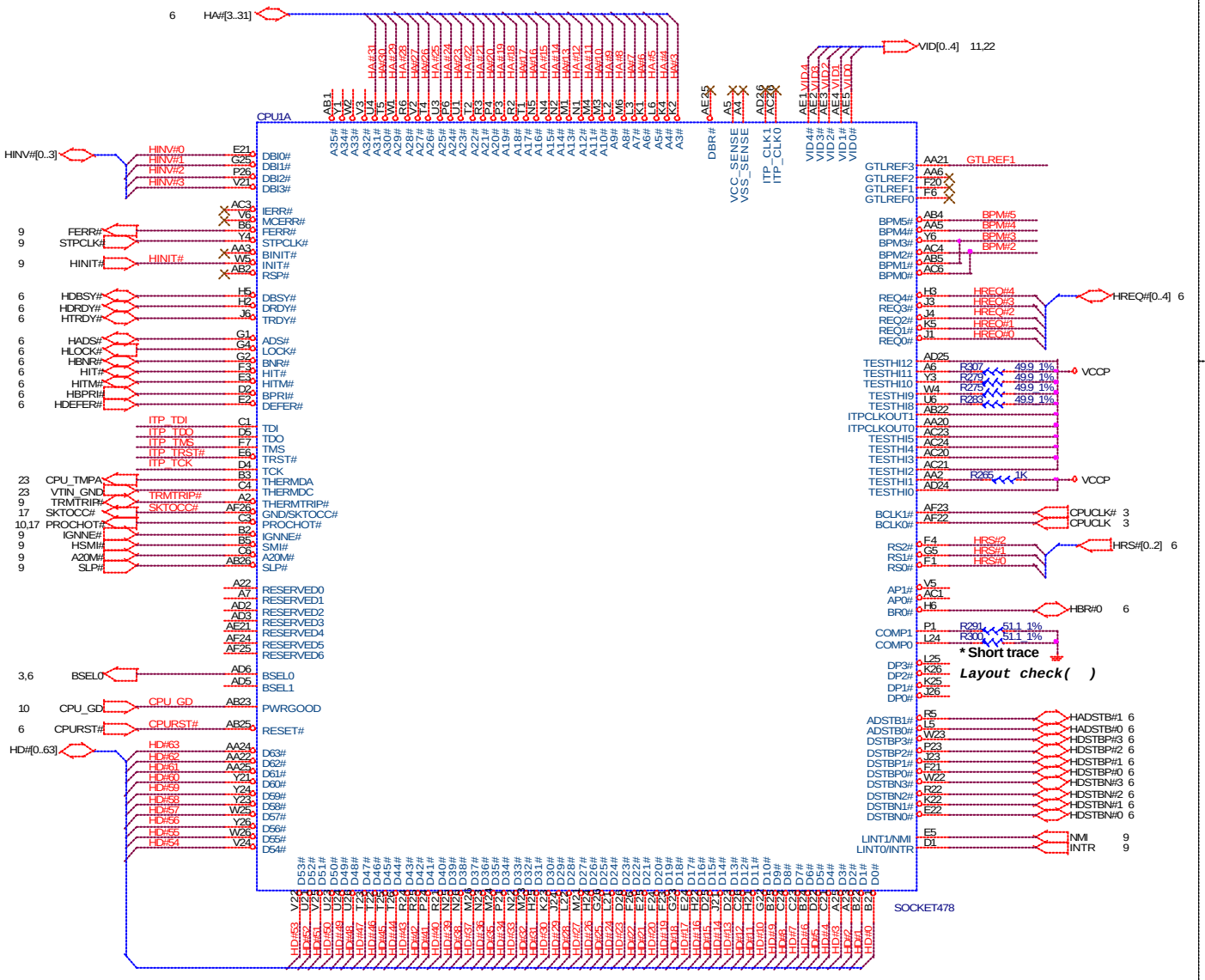

CPU GTL REFERNCE VOLTAGE BLOCK

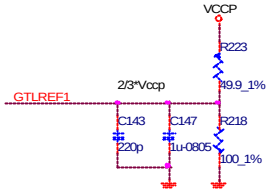

Every pin put one 220pF cap near it.

Trace Width 7mils, Space 10mils.

Keep the voltage divider within 1.5" of the GETREF pin.

CPU ITP BLOCK

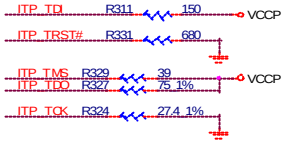

CPU STRAPPING RESISTORS

ALL COMPONENTS CLOSE TO CPU

ALL COMPONENTS CLOSE TO CPU

Micro Star Restricted Secret

Title	mPGA478-B Intel CPU Socket Part 1	Rev
Document Number	MS-6539N1	1.0c
MICRO-STAR INT'L CO.,LTD. No. 69, Li-De St, Jung-He City, Taipei Hsien, Taiwan http://www.msi.com.tw	Last Revision Date: Tuesday, September 03, 2002	
	Sheet 4 of 29	

CPU VOLTAGE BLOCK

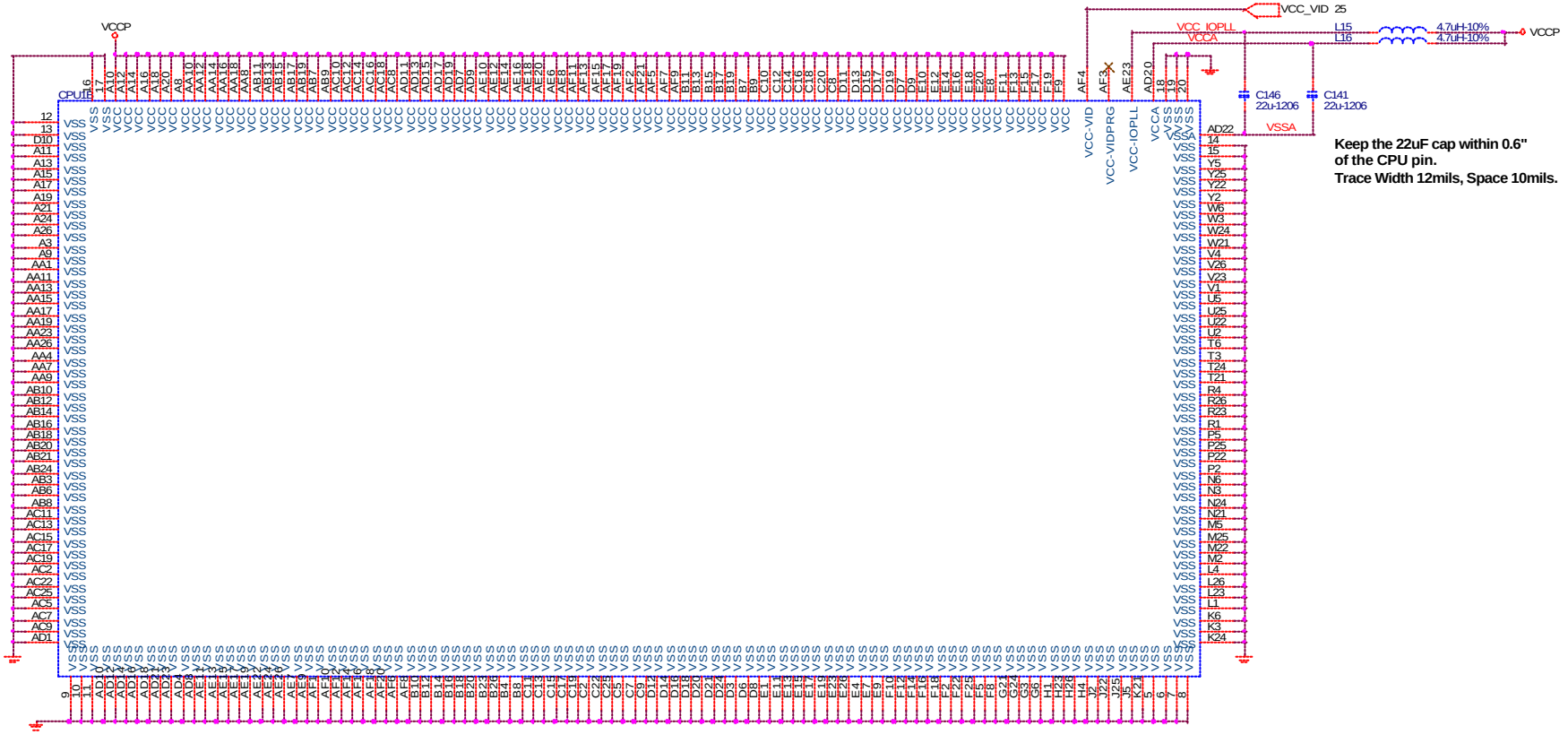

Keep the 22uF cap within 0.6" of the CPU pin.
Trace Width 12mils, Space 10mils.

CPU DECOUPLING CAPACITORS

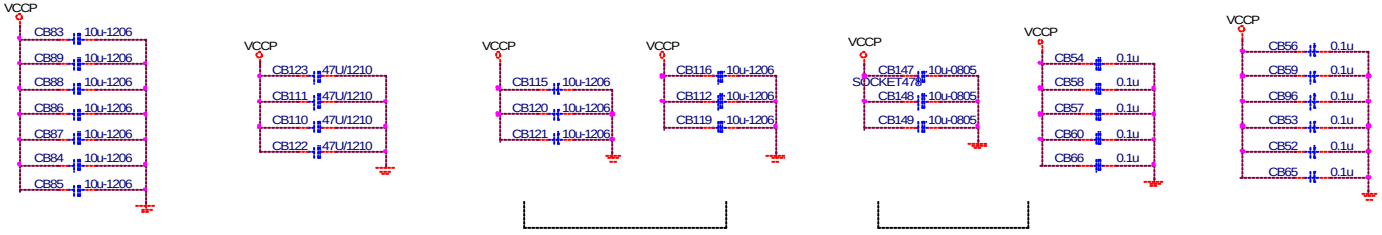

PLACE CAPS WITHIN CPU CAVITY

Place these caps on south side of processor

Place 14 pcs 1206 size cap north side of processor

Micro Star Restricted Secret

Title	mPGA478-B Intel CPU Socket Part 2	Rev 1.0c
Document Number	MS-6539N1	
MICRO-STAR INT'L CO.,LTD. No. 69, Li-De St, Jung-He City, Taipei Hsien, Taiwan http://www.msi.com.tw	Last Revision Date: Tuesday, September 03, 2002	
	Sheet 5 of 29	

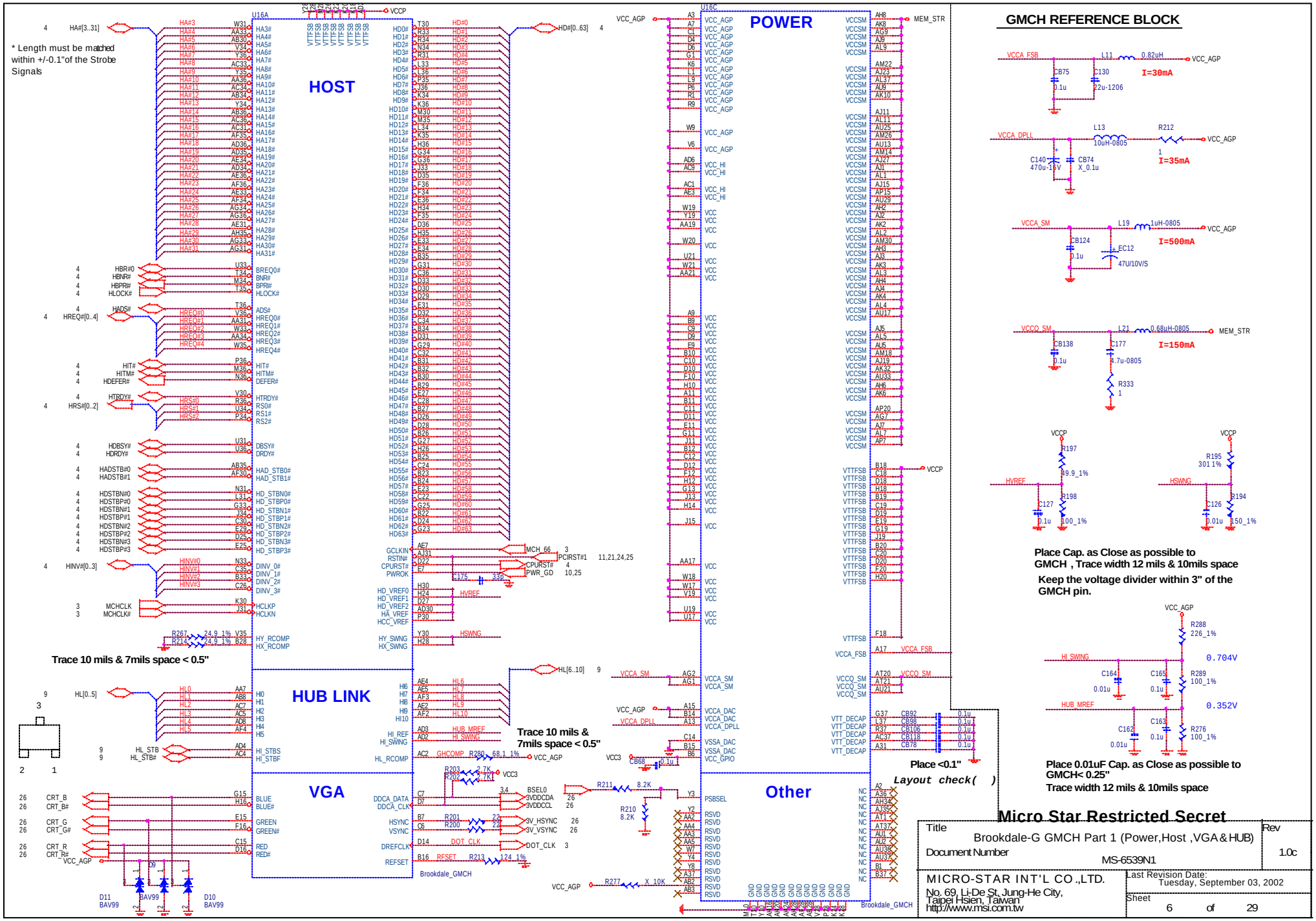
HOST
HUB LINK
VGA
POWER
Other
U16A
U16C
* Length must be matched within +/-0.1"of the Strobe Signals
Trace 10 mils & 7mils space < 0.5"
Trace 10 mils & 7mils space < 0.5"
Place <0.1"
Layout check( )
GMCH REFERENCE BLOCK
VCCA_FSB
L11 0.82uH
VCC_AGP
CB75 0.1u
C130 22u-1206
I=30mA
VCCA_DPLL
L13 10uH-0805
R212 1
C140 470u-16V
CB74 X_0.1u
I=35mA
VCCA_SM
L19 1uH-0805
CB124 0.1u
EC12 47U/10V/S
I=500mA
VCCO_SM
L21 0.68uH-0805
MEM_STR
CB138 0.1u
C177 4.7u-0805
R333 1
I=150mA
VCCP
R197 49.9_1%
HVREF
C127 0.1u
R198 100_1%
R195 301 1%
HSWNG
C126 0.01u
R194 150_1%
Place Cap. as Close as possible to GMCH , Trace width 12 mils & 10mils space
Keep the voltage divider within 3" of the GMCH pin.
R288 226_1%
HI_SWING
0.704V
C164 0.01u
C165 0.1u
R289 100_1%
HUB_MREF
0.352V
C162 0.01u
C163 0.1u
R276 100_1%
Place 0.01uF Cap. as Close as possible to GMCH< 0.25"
Trace width 12 mils & 10mils space
Micro Star Restricted Secret
Title
Brookdale-G GMCH Part 1 (Power,Host ,VGA&HUB)
Rev
1.0c
Document Number
MS-6539N1
MICRO-STAR INT'L CO.,LTD.
No. 69, Li-De St, Jung-He City, Taipei Hsien, Taiwan
http://www.msi.tw
Last Revision Date: Tuesday, September 03, 2002
Sheet 6 of 29
Brookdale_GMCH

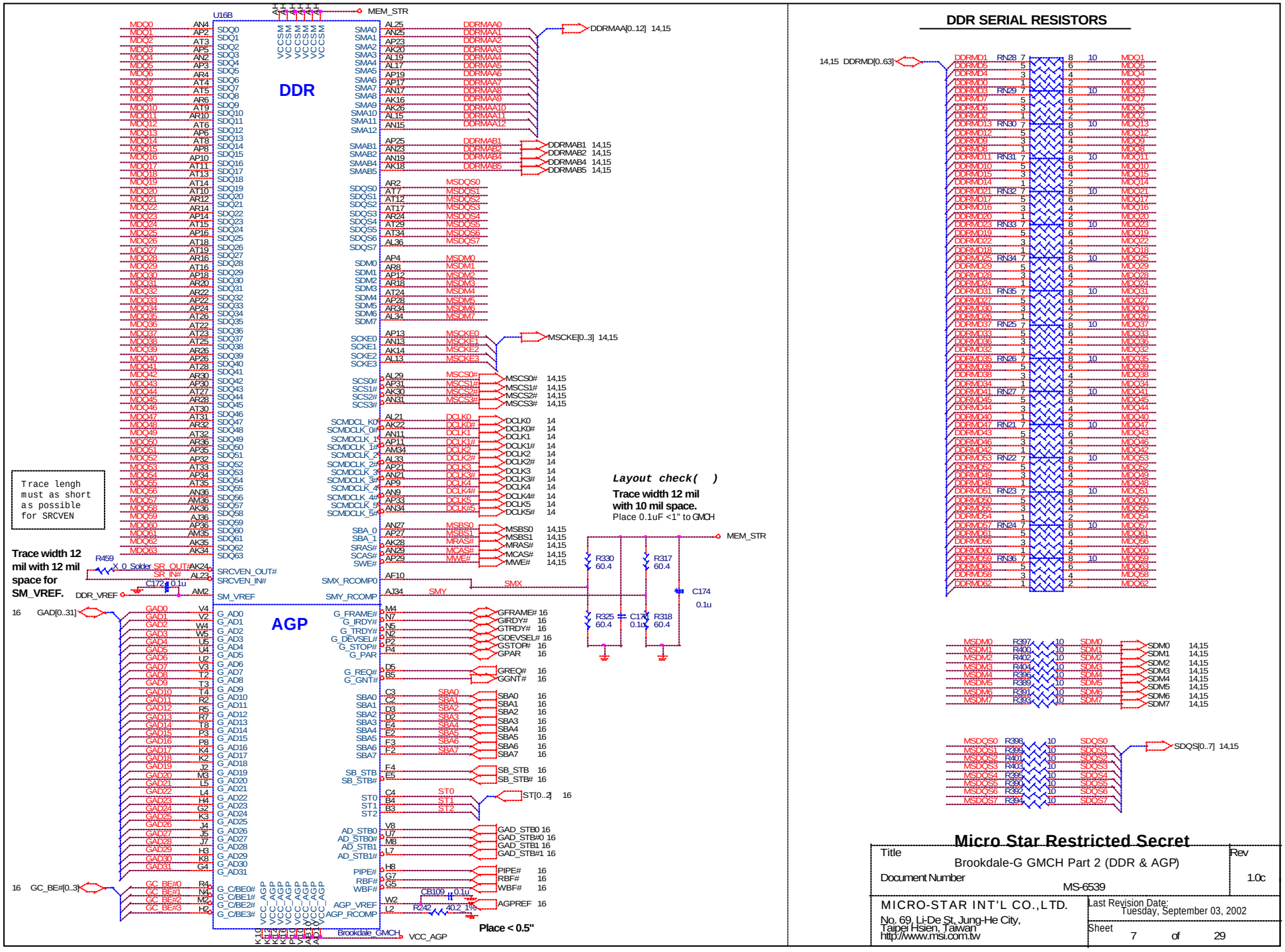
DDR
AGP
U16B
MEM_STR
DDR SERIAL RESISTORS
Trace lengh must as short as possible for SRCVEN
Trace width 12 mil with 12 mil space for SM_VREF.
Layout check( )
Trace width 12 mil with 10 mil space.
Place 0.1uF <1" to GMCH
Place < 0.5"
Brookdale-GMCH
Micro Star Restricted Secret
Title
Brookdale-G GMCH Part 2 (DDR & AGP)
Rev
1.0c
Document Number
MS-6539
MICRO-STAR INT'L CO.,LTD.
No. 69, Li-De St, Jung-He City, Taipei Hsien, Taiwan
http://www.msi.com.tw
Last Revision Date: Tuesday, September 03, 2002
Sheet 7 of 29

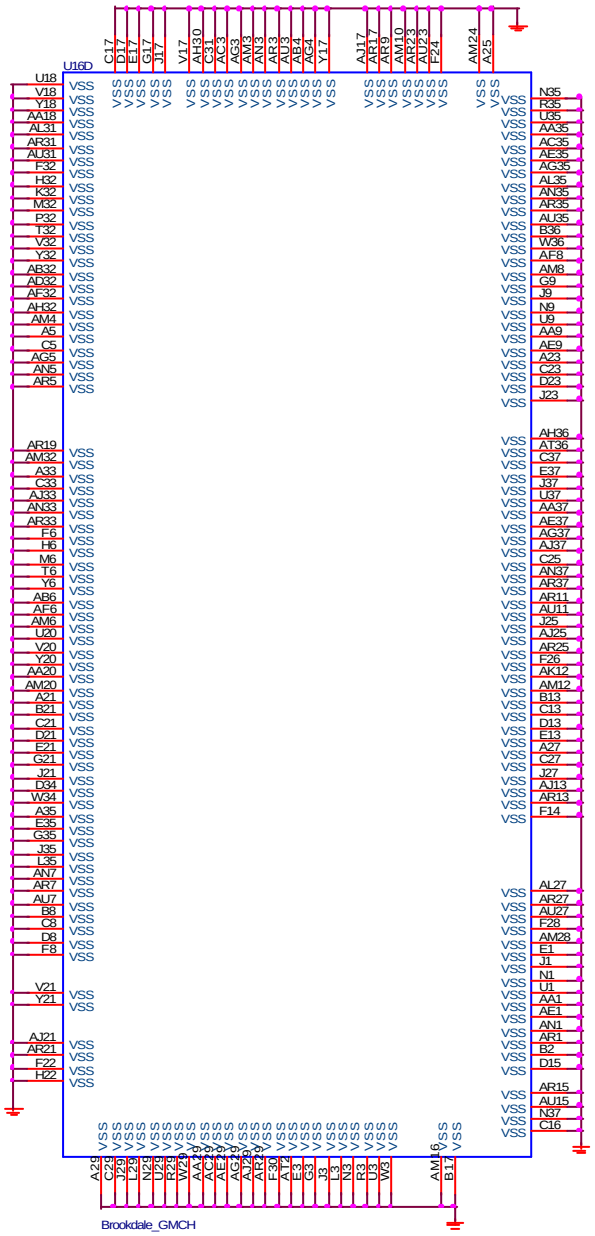

GMCH DECOUPLING CAPACITOR

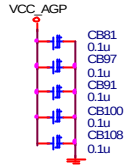

Pin A5
Pin E1
Pin J1
Pin N1
Pin U1

Place decoupling cap close to GMCH AGP Interface < 0.1"

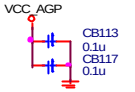

Pin AA1
Pin AE1

Place decoupling cap close to GMCH Hub-Link Interface< 0.1"

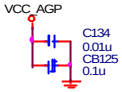

Pin B14
Pin A15

Place decoupling cap close to GMCH DAC Interface< 0.1"

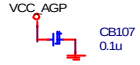

Place decoupling cap close to GMCH Core Logic Interface < 0.1"

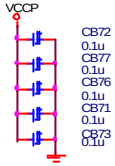

Place decoupling cap close to GMCH CPU Interface < 250mil in the Vtt corridor

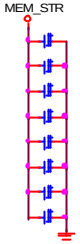

Pin AL37
Pin AU5
Pin AU9
Pin AU13
Pin AU17
Pin AU25
Pin AU29
Pin AU33

Place decoupling cap close to GMCH Memory Interface < 0.1", with 18 mil trach width

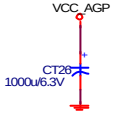

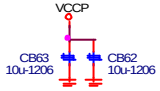

Place Bulk cap for Core Logic, AGP & Hub Link Interface

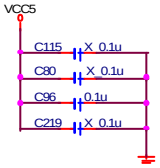

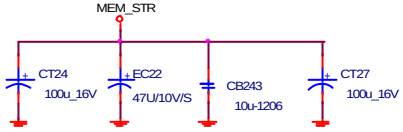

Place Bulk cap between GMCH & DIMM slot

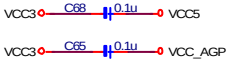

Micro Star Restricted Secret

Title	Brookdale-G GMCH Part 3 (GND)	Rev 1.0c
Document Number	MS-6539N1	
MICRO-STAR INT'L CO.,LTD. No. 69, Li-De St, Jung-He City, Taipei Hsien, Taiwan http://www.msi.com.tw	Last Revision Date: Monday, September 16, 2002	
	Sheet 8 of 29	

ICH4 PCI / HUB LINK / CPU / LAN / INTERRUPT SIGNALS

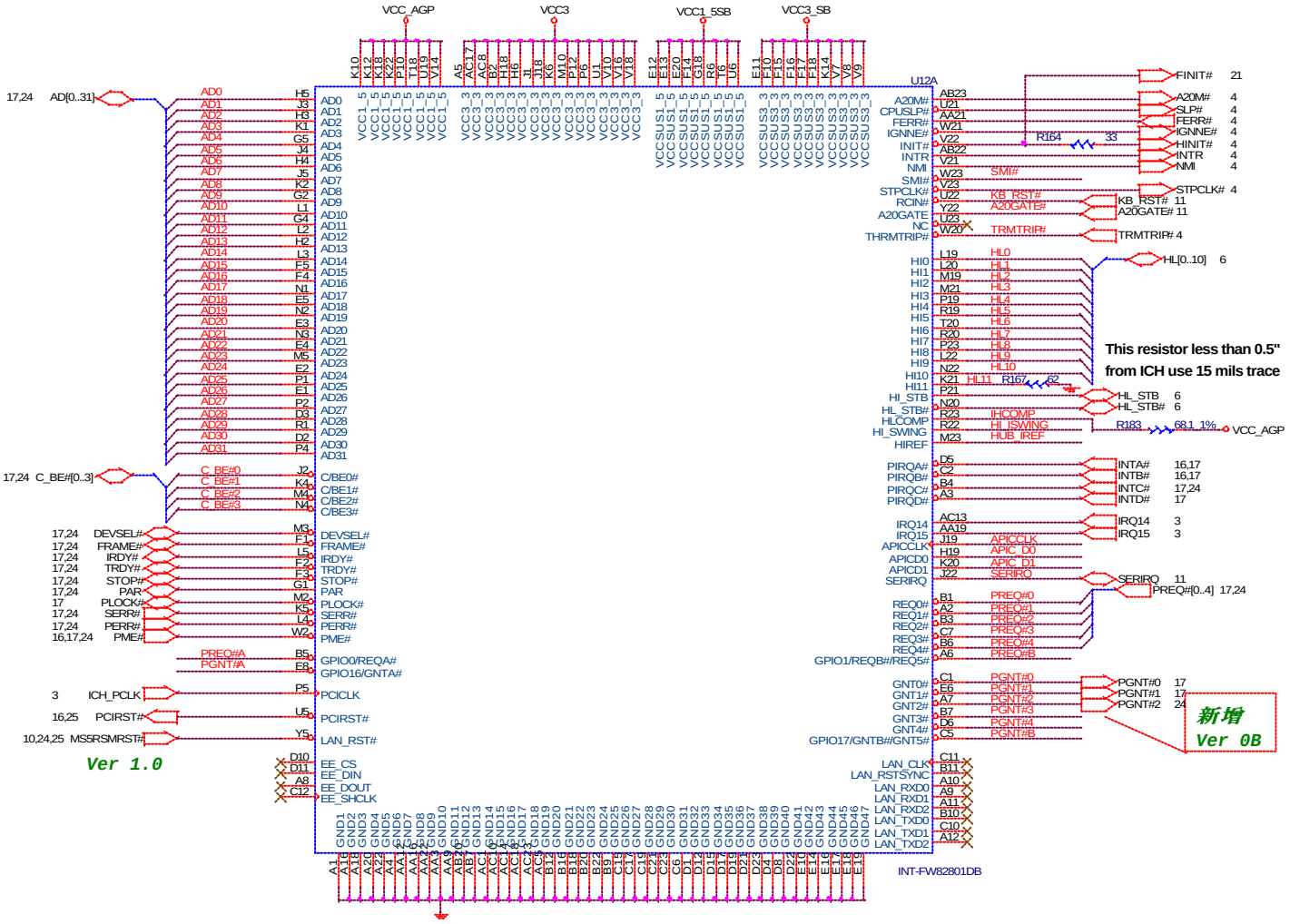

ICH4 SMI# SIGNAL

ICH4 STRAPPING RESISTORS

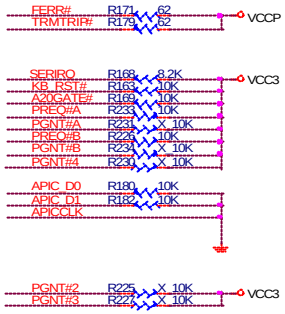

ICH4 REFERENCE VOLTAGE

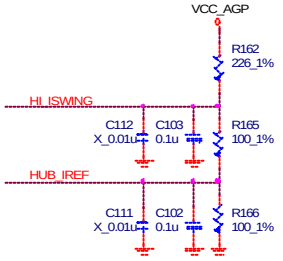

Place Cap. as Close as possible to ICH4 < 0.25"
Trace width use 12 mils and 10mils space

ICH4 DECOUPLING CAPACITORS

Place one 0.1u close to ICH4 <100 mil

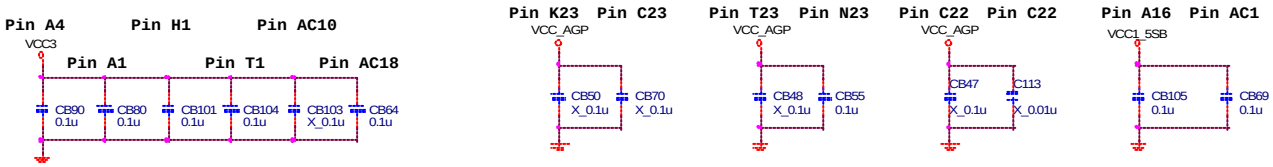

Micro Star Restricted Secret

Title	ICH4 Part 1 (Power,HUB,PCI & CPU I/F)	Rev 1.0c
Document Number	MS-6539N1	
MICRO-STAR INT'L CO.,LTD. No. 69, Li-De St, Jung-He City, Taipei Hsien, Taiwan http://www.msi.com.tw	Last Revision Date: Tuesday, September 03, 2002	
	Sheet 9 of 29	

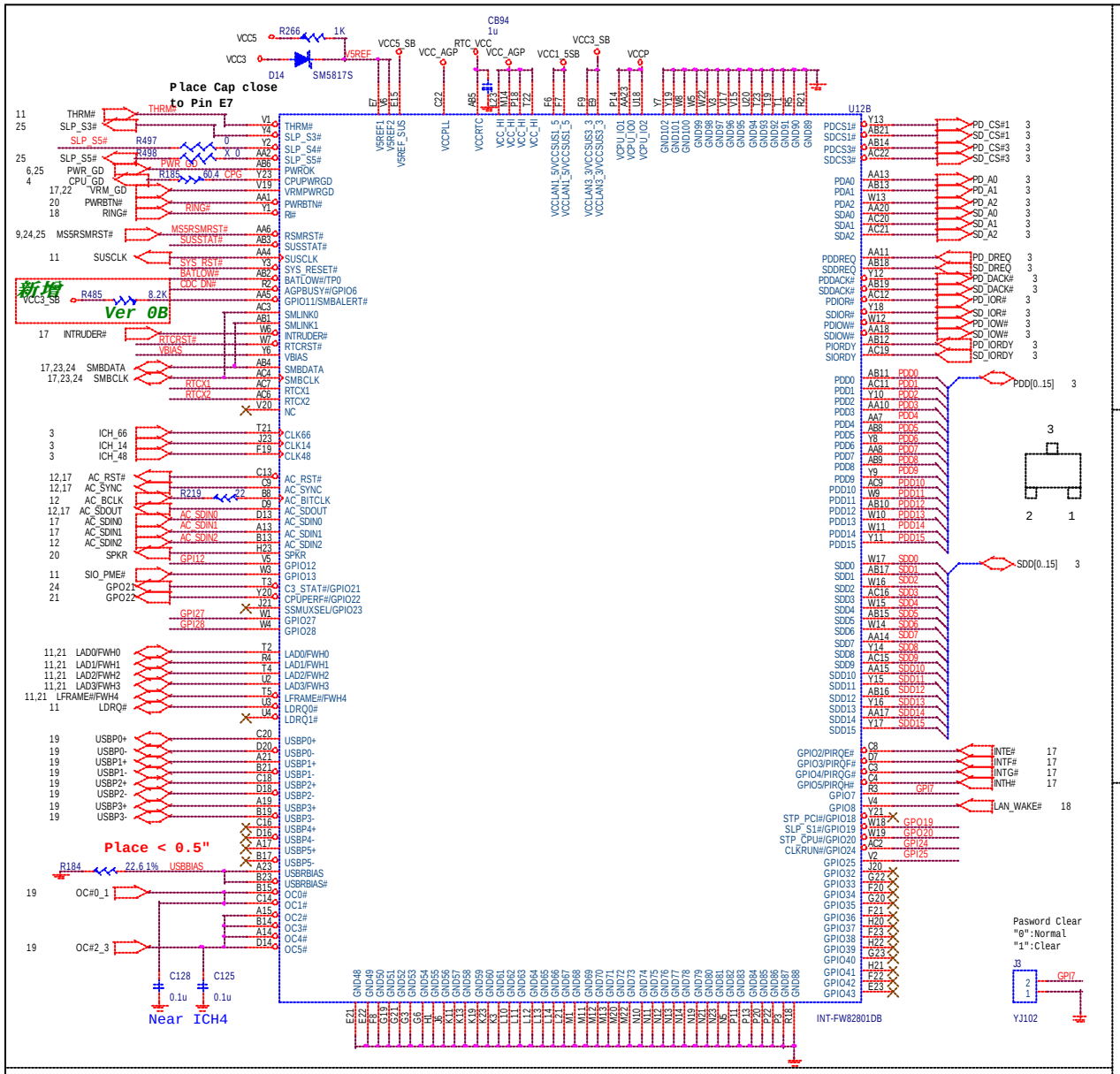

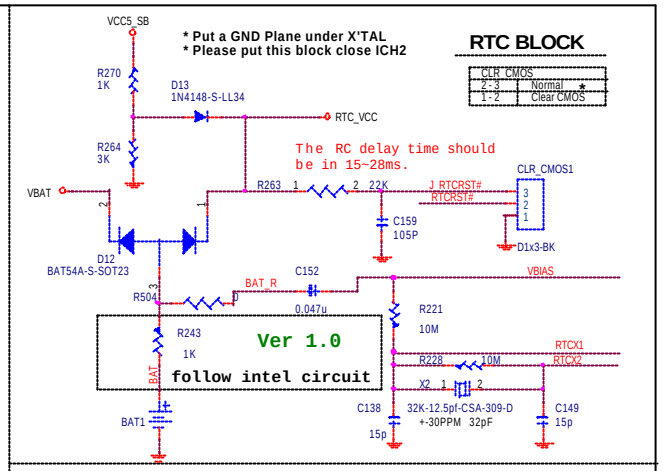

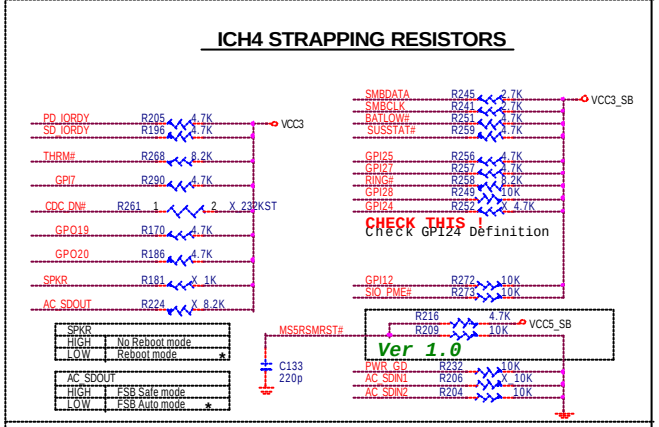

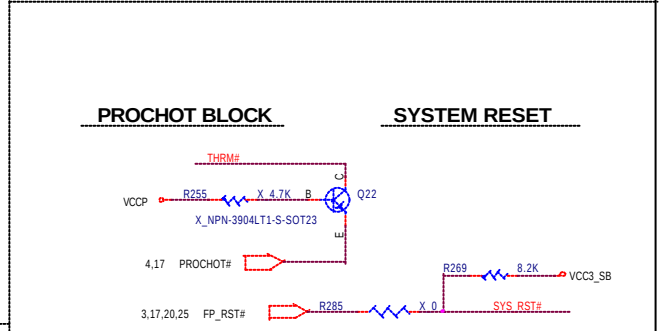

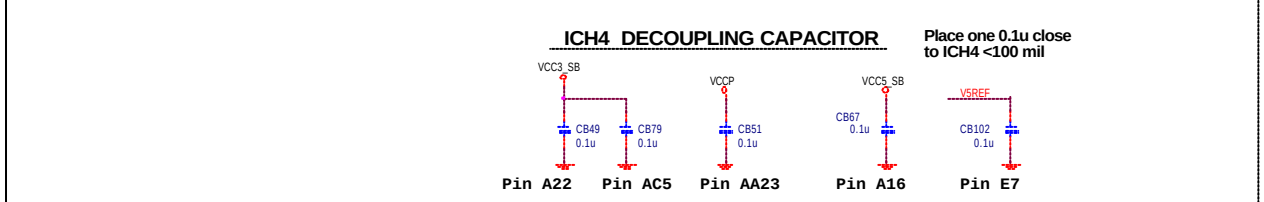

Micro Star Restricted Secret

Title	ICH4 Part 2 (RTC,GPIO,LPC,USB,IDE)	Rev 1.0c
Document Number	MS-6539N1	
MICRO-STAR INT'L CO.,LTD. No. 69, Li-De St, Jung-He City, Taipei Hsien, Taiwan http://www.msi.com.tw	Last Revision Date: Tuesday, September 03, 2002	Sheet 10 of 29

1/2" Notebook type
FLOPPY DISK HEADER

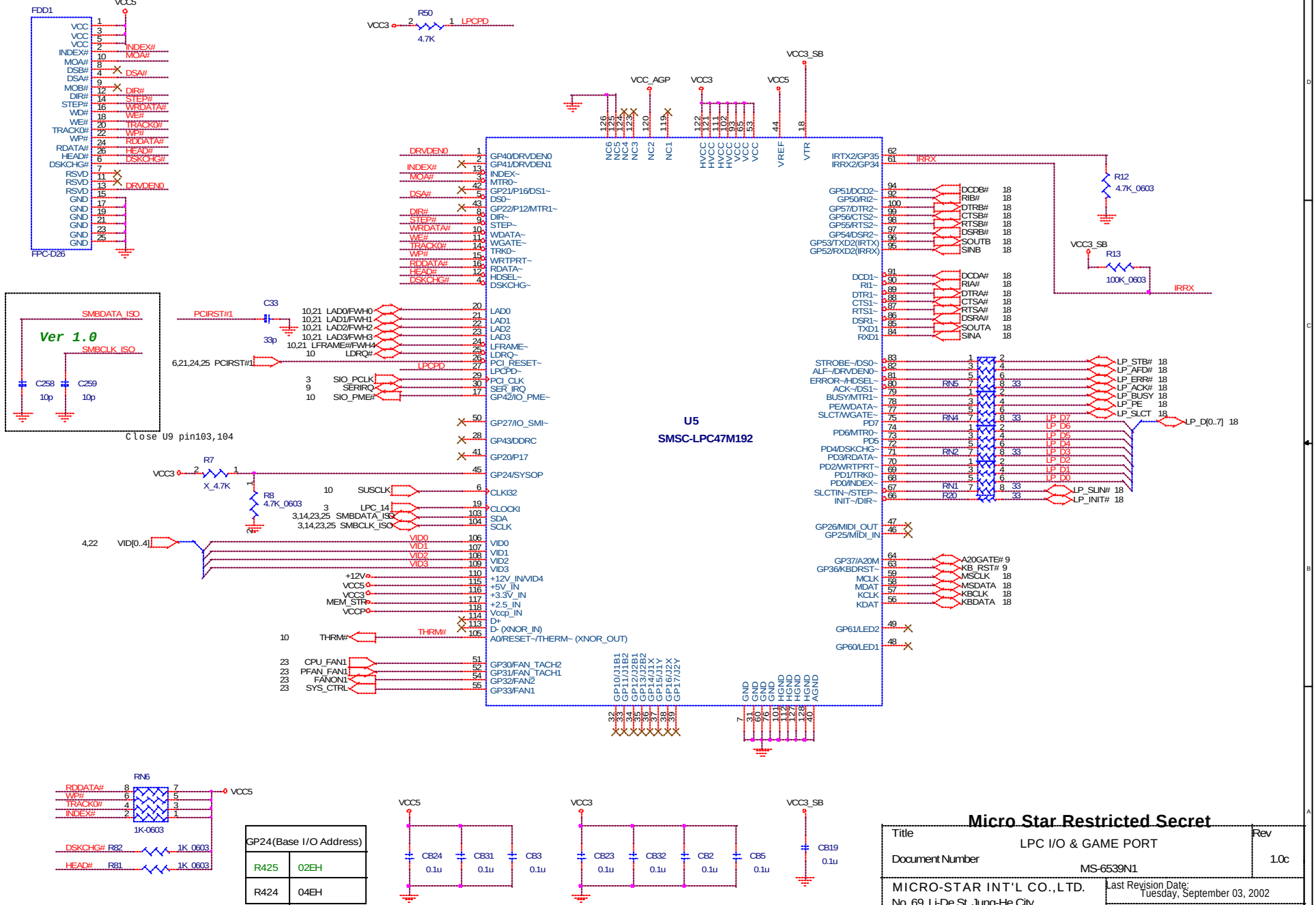

GP24(Base I/O Address)	
R425	02EH
R424	04EH

Micro Star Restricted Secret

Title	LPC I/O & GAME PORT
Rev	1.0c
Document Number	MS-6539N1
MICRO-STAR INT'L CO.,LTD.	Last Revision Date: Tuesday, September 03, 2002
No. 69, Li-De St, Jung-He City, Taipei Hsien, Taiwan http://www.msi.com.tw	Sheet 11 of 29

AUDIO CODEC
9708/9756/1885

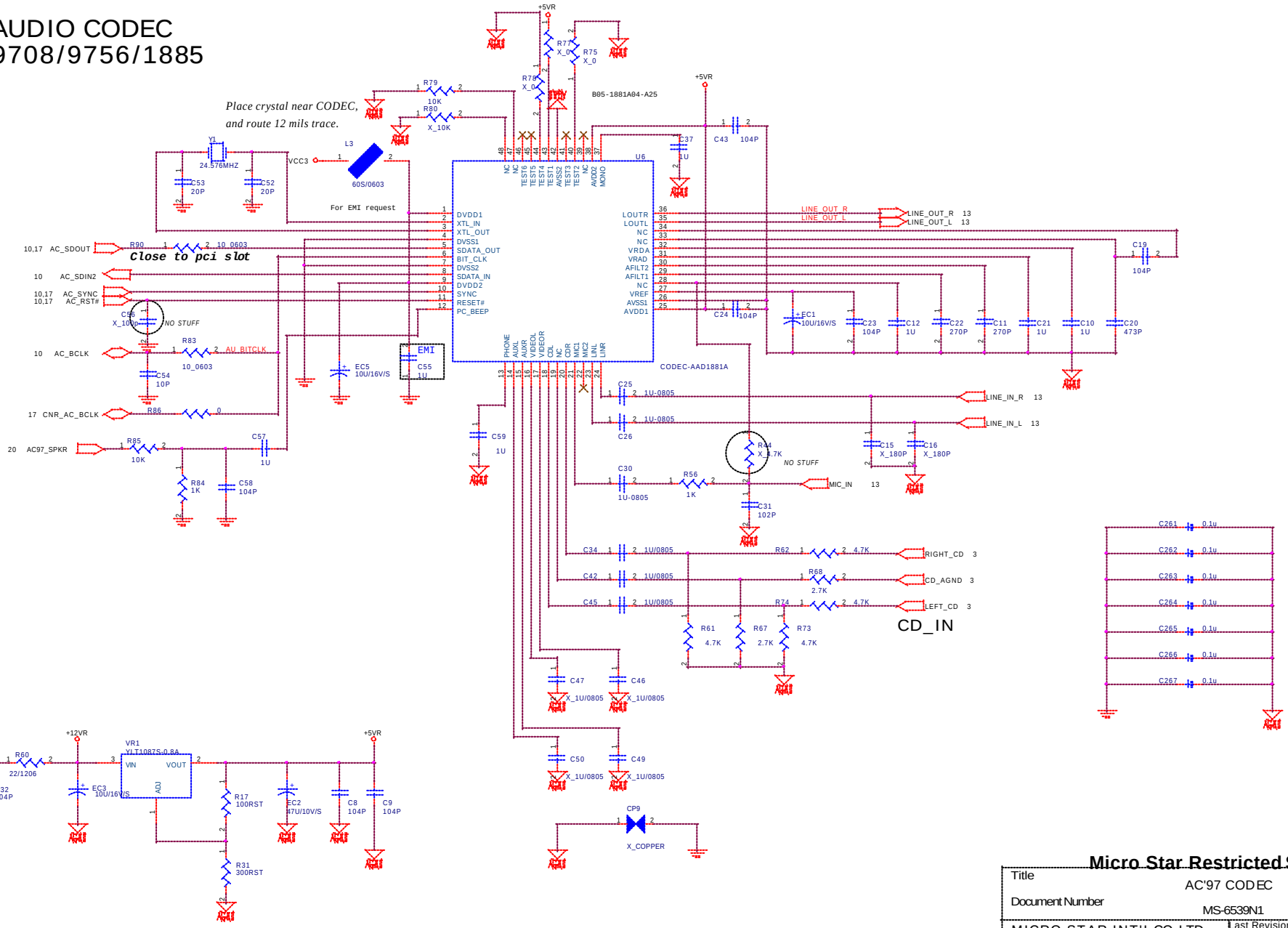

Micro Star Restricted Secret

Title	AC'97 CODEC	Rev
Document Number	MS-6539N1	1.0c
MICRO-STAR INT'L CO.,LTD. No. 69, Li-De St, Jung-He City, Taipei Hsien, Taiwan http://www.msi.com.tw	Last Revision Date: Wednesday, September 04, 2002	
	Sheet 12 of 29	

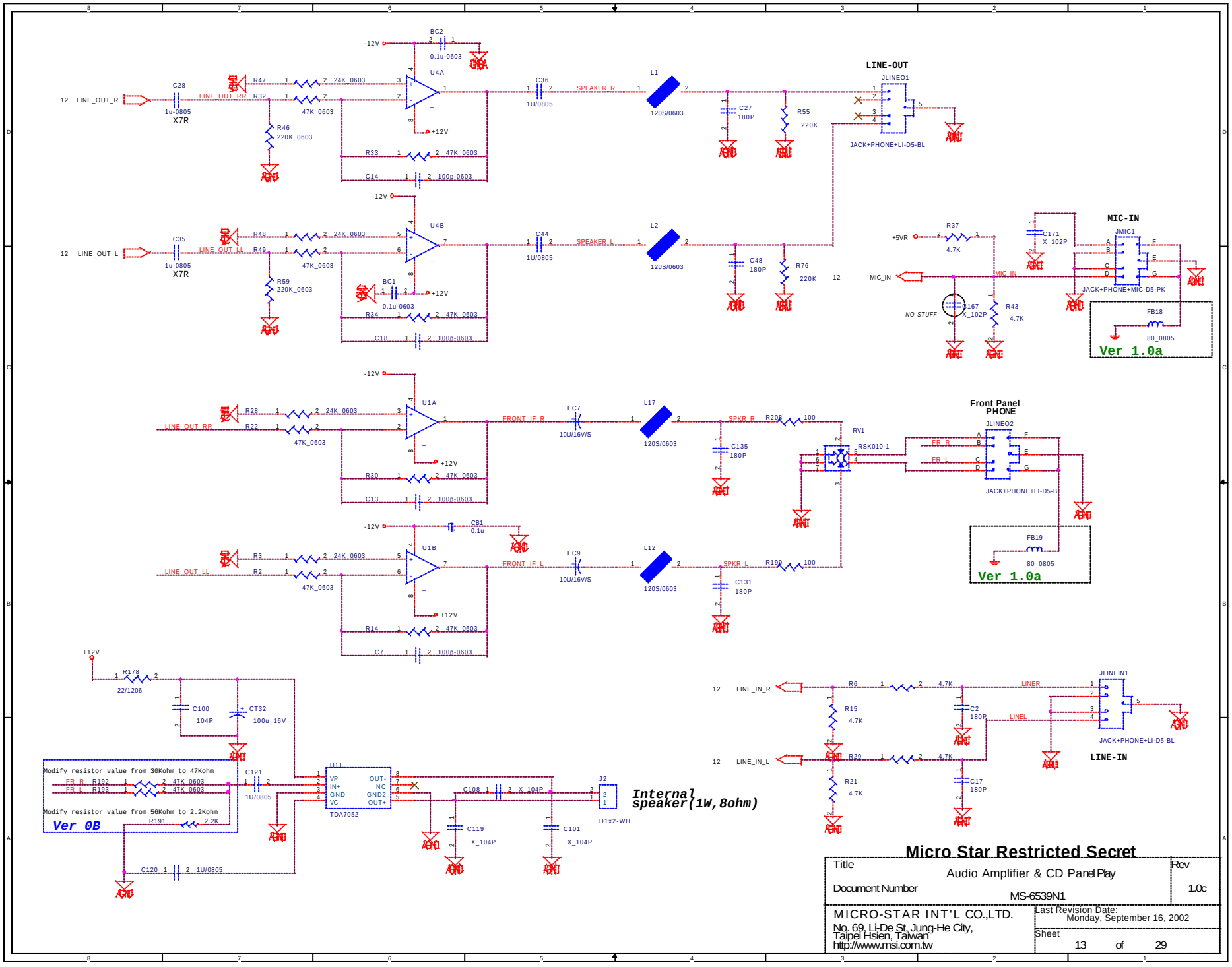
LINE-OUT
JLINEO1
JACK+PHONE+LI-D5-BL
MIC-IN
JMIC1
JACK+PHONE+MIC-D5-PK
Front Panel PHONE
JLINEO2
JACK+PHONE+LI-D5-BL
JLINEIN1
JACK+PHONE+LI-D5-BL
LINE-IN
U4A
U4B
U1A
U1B
U11
TDA7052
J2
D1x2-WH
Internal speaker(1W,8ohm)
Modify resistor value from 30Kohm to 47Kohm
Modify resistor value from 56Kohm to 2.2Kohm
Ver 0B
Ver 1.0a
Ver 1.0a
NO STUFF
Micro Star Restricted Secret
Title
Audio Amplifier & CD Panel Play
Rev
1.0c
Document Number
MS-6539N1
MICRO-STAR INT'L CO.,LTD.
No. 69, Li-De St, Jung-He City, Taipei Hsien, Taiwan
http://www.msi.com.tw
Last Revision Date:
Monday, September 16, 2002
Sheet
13 of 29

SYSTEM MEMORY

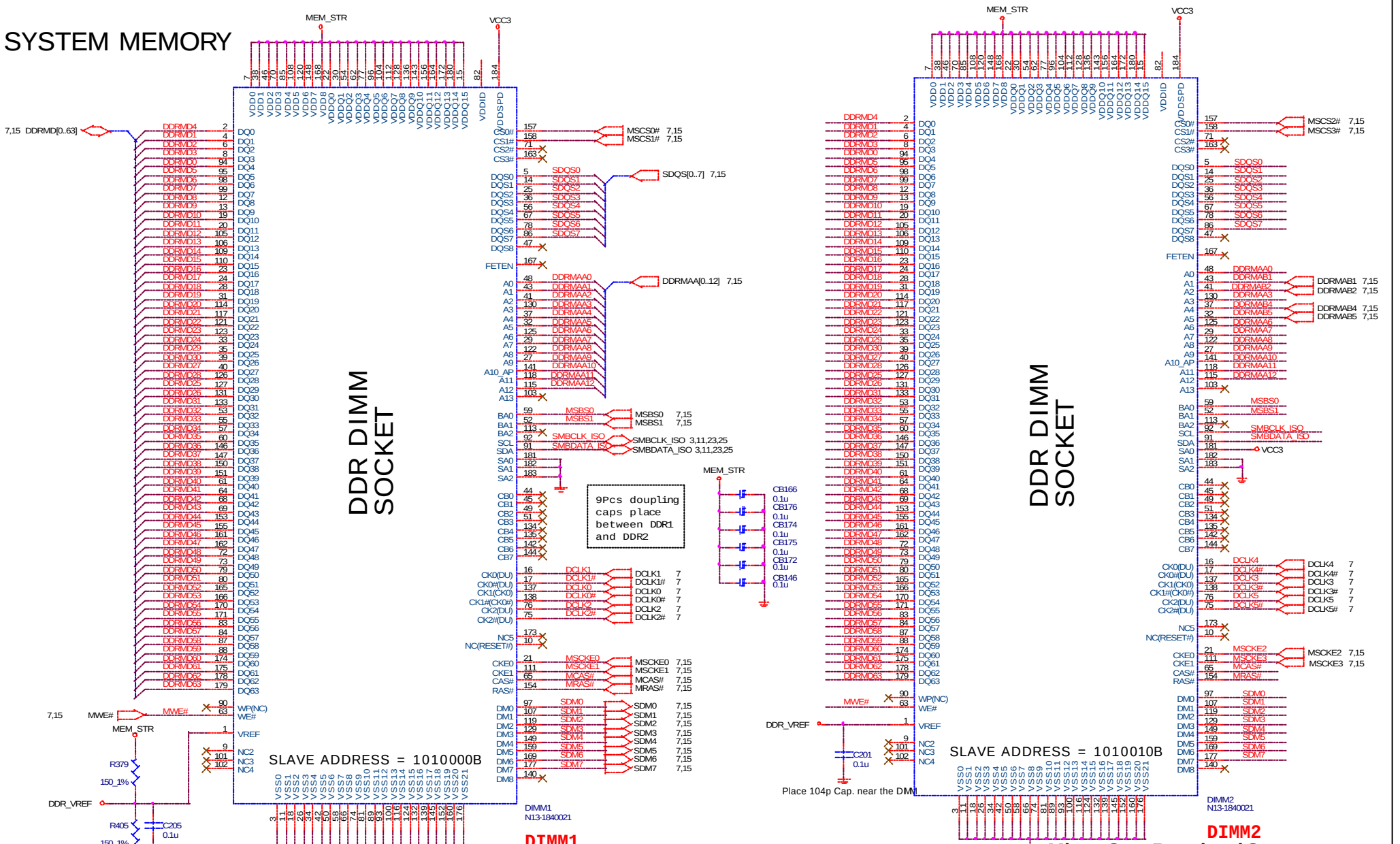

Title	DDR DIMM 1 & 2	Rev 1.0c
Document Number	MS-6539N1	
MICRO-STAR INT'L CO.,LTD. No. 69, Li-De St, Jung-He City, Taipei Hsien, Taiwan http://www.msi.com.tw	Last Revision Date: Tuesday, September 03, 2002	
	Sheet 14 of 29	

DDR TERMINATORS

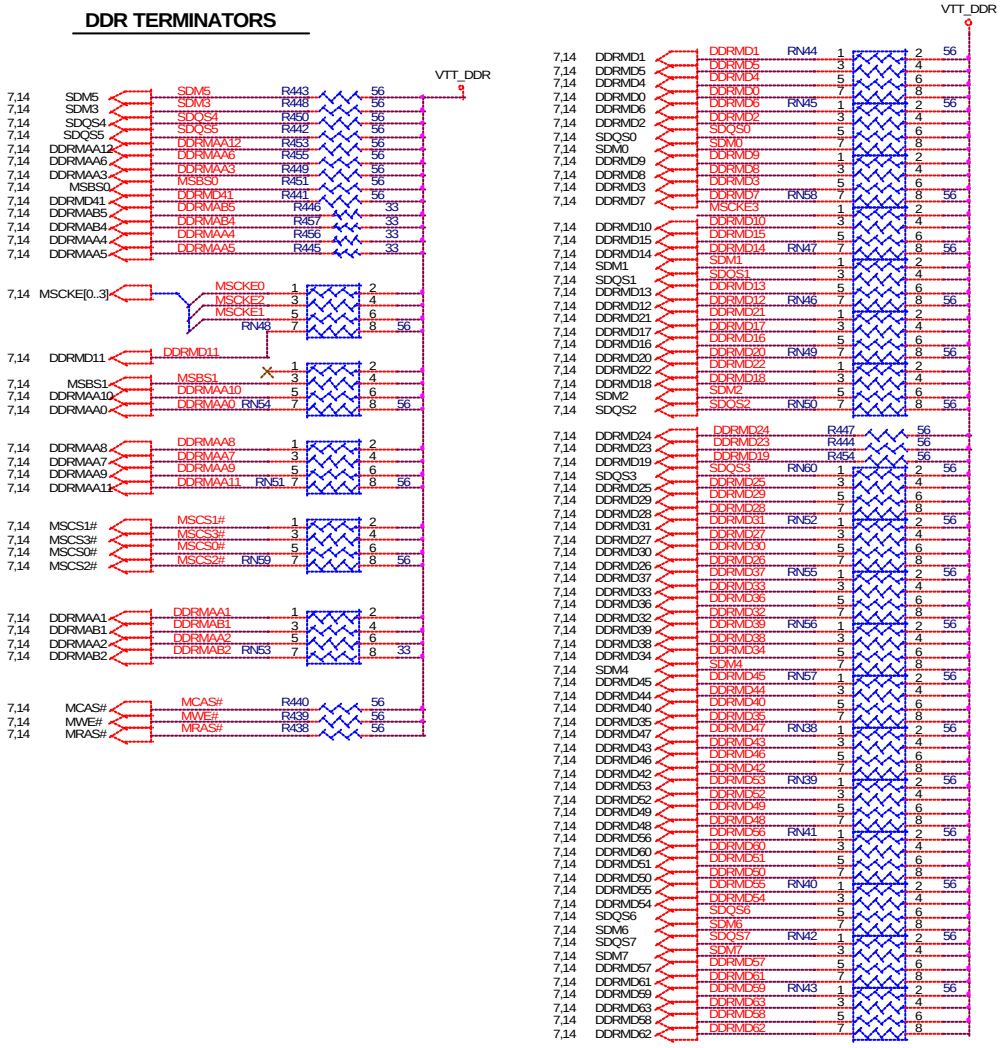

DDR Decouping Caps

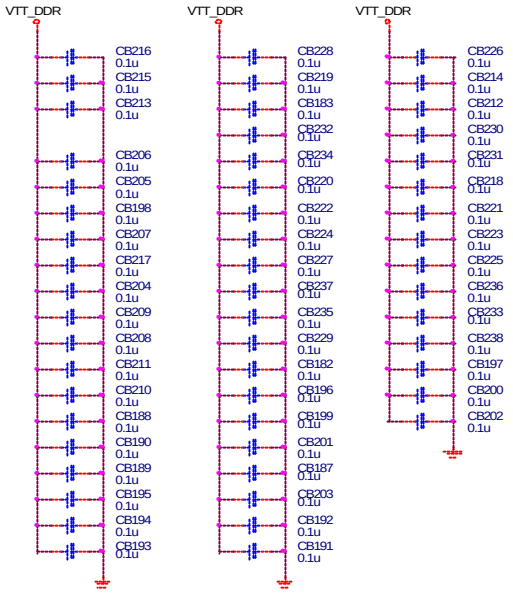

Total 110 signal, need 55 pcs decoupling.

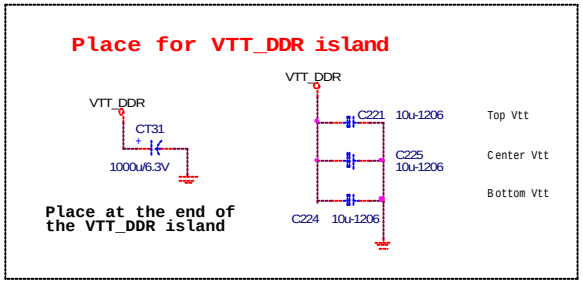

Micro Star Restricted Secret

Title	DDR Terminator Resistor	Rev 1.0c
Document Number	MS-6539N1	
MICRO-STAR INT'L CO.,LTD. No. 69, Li-De St, Jung-He City, Taipei Hsien, Taiwan http://www.msi.com.tw	Last Revision Date: Tuesday, September 03, 2002	
	Sheet 15 of 29	

AGP Slot Imax

VCC_AGP 2.0A
VCC3 6.0A
VCC12 1.0A
VCC5 2.0A
VCC3_SB 0.375A

AGP 1.5V 2X/4X SLOT(AGP VER:2.0 COMPLY)

VCC5 = 60mils trace / 15 mils space

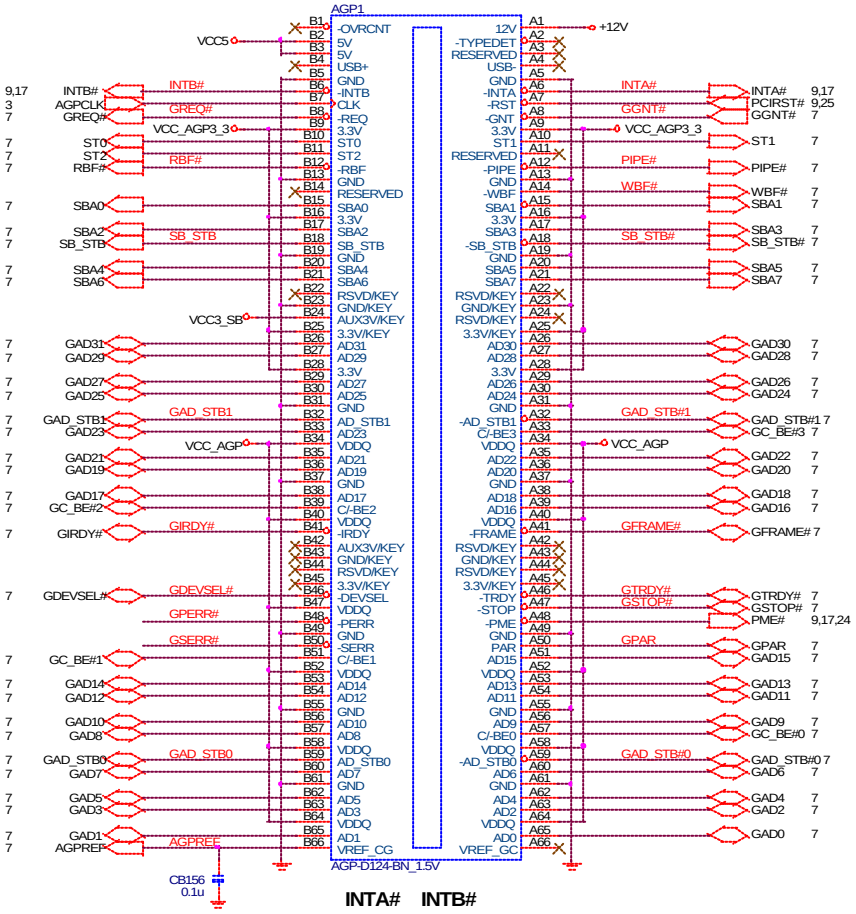

INTA# INTB#

AGP SIGNAL REFERENCE CIRCUIT

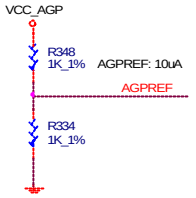

NEAR AGP SLOT

AGP TERMINATION RESISTORS

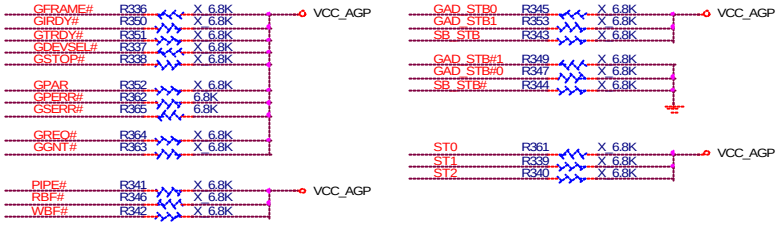

LESS 100MILS STUB TRACE LENGTH FOR 2/4X
LESS 500MIL FOR 1X MUST BE FOLLOW ING.

Place these resistors between AGP slot & GMCH

AGP SLOT DECOUPLING CAPACITORS

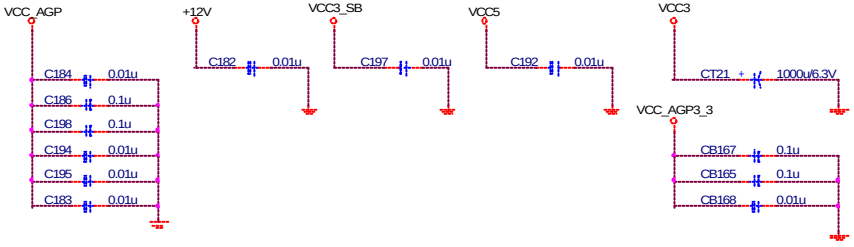

Micro Star Restricted Secret

Title	AGP 2.0	Rev
Document Number	MS-6539N1	1.0c
MICRO-STAR INT'L CO.,LTD. No. 69, Li-De St, Jung-He City, Taipei Hsien, Taiwan http://www.msi.com.tw	Last Revision Date: Monday, September 16, 2002	
	Sheet 16 of 29	

PCI SLOT 1 (PCI VER: 2.2 COMPLY)

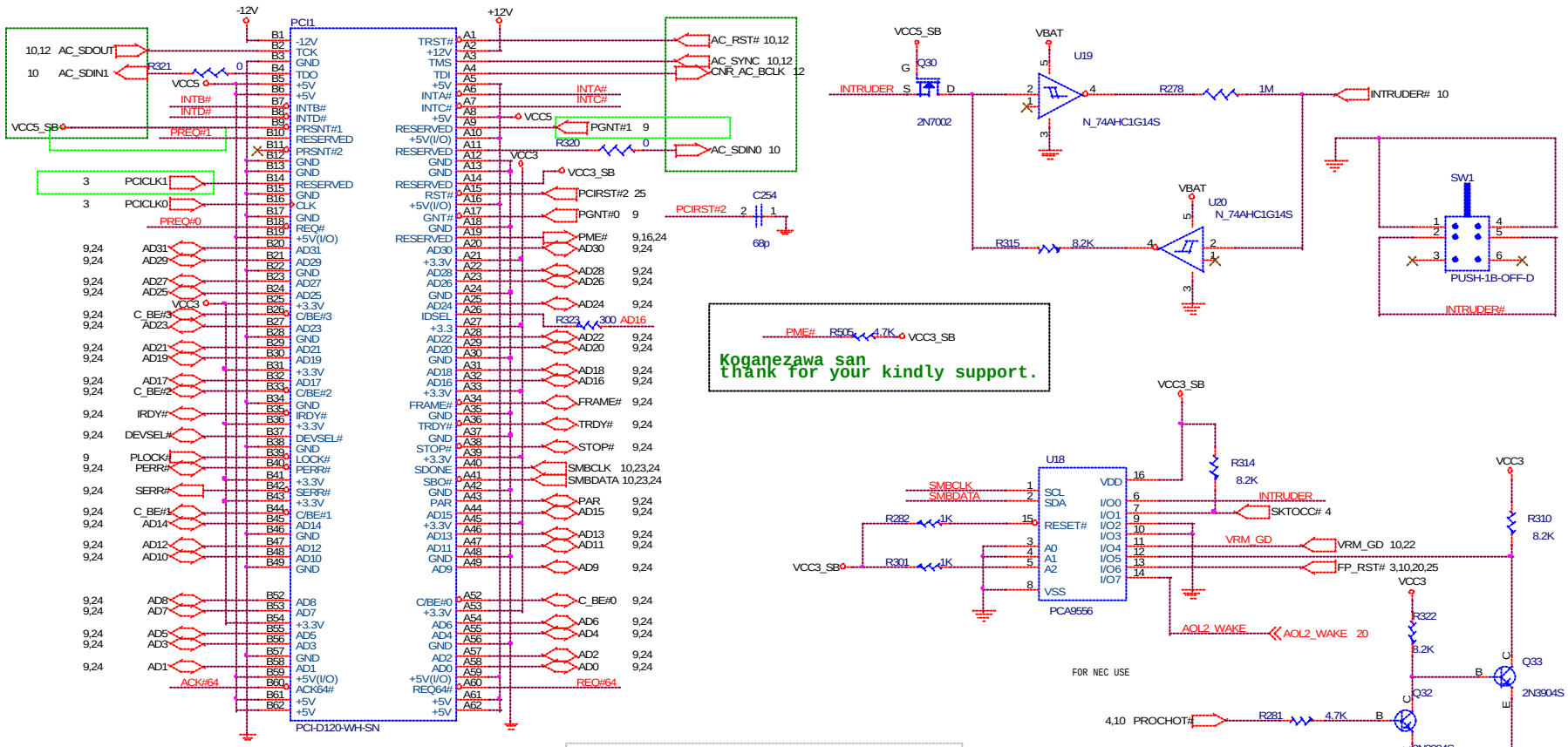

IDSEL = AD16
MASTER = PREQ0
INTA#

IDSEL = AD16	IDSEL = AD17
MASTER = PREQ0	MASTER = PREQ1
INTA#	INTB#

PCI PULL-UP / DOWN RESISTORS

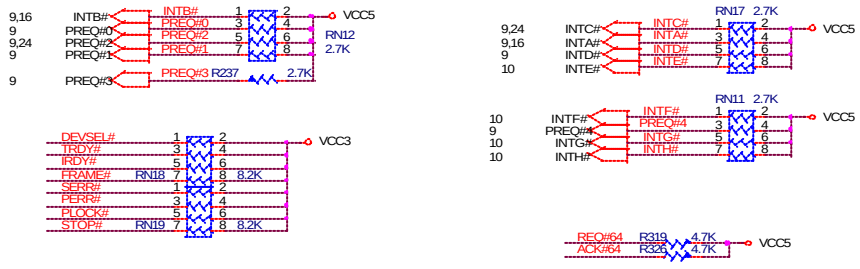

PCI SLOT DECOUPLING CAPACITORS

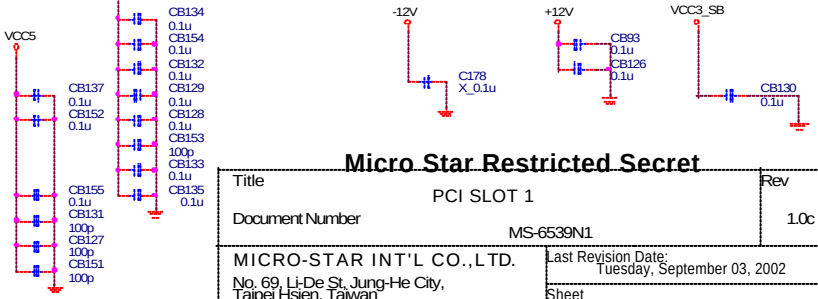

Micro Star Restricted Secret

Title	PCI SLOT 1	Rev 1.0c
Document Number	MS-6539N1	
MICRO-STAR INT'L CO.,LTD. No. 69, Li-De St, Jung-He City, Taipei Hsien, Taiwan http://www.msi.com.tw	Last Revision Date: Tuesday, September 03, 2002	Sheet 17 of 29

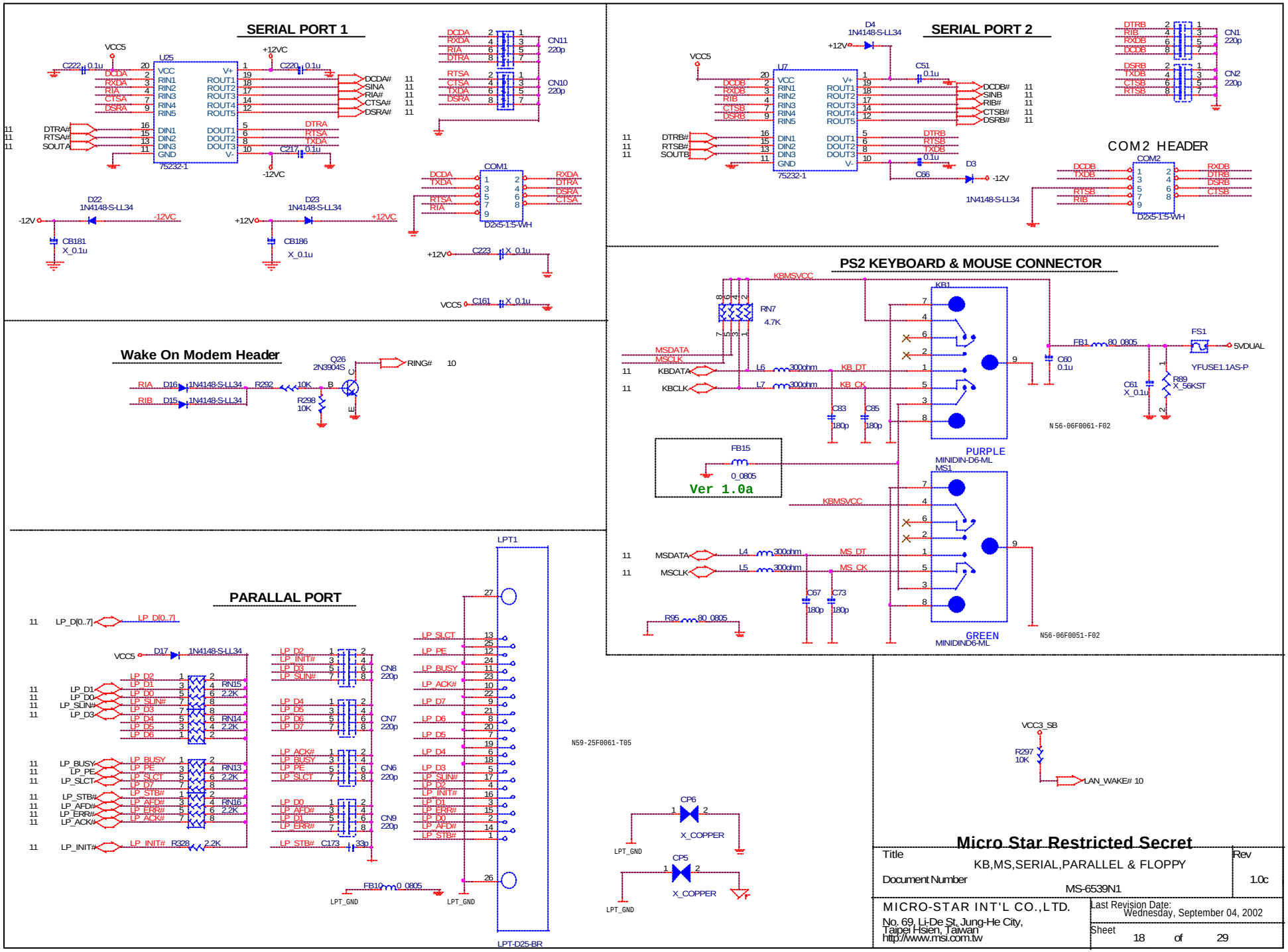
SERIAL PORT 1
U25
75232-1
CN11 220p
CN10 220p
COM1
D2X5-1.5-WH
D22 1N4148-S-LL34
D23 1N4148-S-LL34
CB181 X_0.1u
CB186 X_0.1u
C223 X_0.1u
C161 X_0.1u
SERIAL PORT 2
U7
75232-1
D4 1N4148-S-LL34
D3 1N4148-S-LL34
C51 0.1u
C66 0.1u
CN1 220p
CN2 220p
COM2 HEADER
COM2
D2X5-1.5-WH
Wake On Modem Header
Q26 2N3904S
RING# 10
D16 1N4148-S-LL34
D15 1N4148-S-LL34
R292 10K
R298 10K
PS2 KEYBOARD & MOUSE CONNECTOR
KB1
RN7 4.7K
L6 300ohm
L7 300ohm
KB_DT
KB_CK
C83 180p
C85 180p
FB1 80_0805
C60 0.1u
FS1
5VDUAL
YFUSE1.1AS-P
C61 X_0.1u
R99 X_56KST
N56-06F0061-F02
FB15 0_0805
Ver 1.0a
PURPLE
MINIDIN-D6-ML
MS1
L4 300ohm
L5 300ohm
MS_DT
MS_CK
C67 180p
C73 180p
R95 80_0805
GREEN
MINIDIND6-ML
N56-06F0051-F02
PARALLAL PORT
LPT1
D17 1N4148-S-LL34
RN15 2.2K
RN14 2.2K
RN13 2.2K
RN16 2.2K
R328 2.2K
CN8 220p
CN7 220p
CN6 220p
CN9 220p
C173 33p
FB10 0_0805
LPT_GND
LPT-D25-BR
N59-25F0061-T05
CP6 X_COPPER
CP5 X_COPPER
VCC3_SB
R297 10K
LAN_WAKE# 10
Micro Star Restricted Secret
Title
KB,MS,SERIAL,PARALLEL & FLOPPY
Rev
1.0c
Document Number
MS-6539N1
MICRO-STAR INT'L CO.,LTD.
No. 69, Li-De St, Jung-He City,
Taipei Hsien, Taiwan
http://www.msi.com.tw
Last Revision Date:
Wednesday, September 04, 2002
Sheet
18 of 29

POWER CIRCUIT FOR USB PORT 2,3

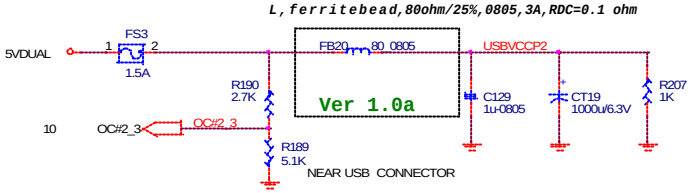

REAR PANEL USB CONNECTOR FOR USB PORT 2,3

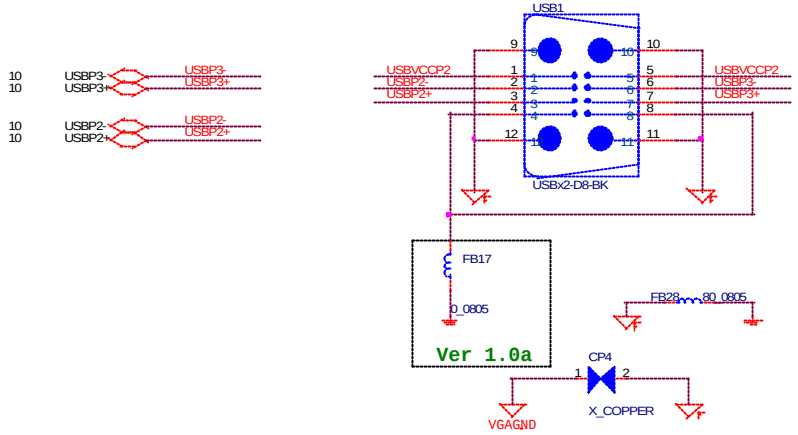

POWER CIRCUIT FOR USB PORT 0,1

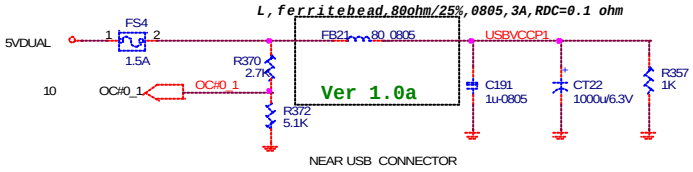

* USB Trace width : 7.5 mils
* USB Trace Spacing : Low speed 20 mils, High speed 50 mils
* Differential USB Signlas Trace, Spacing : 7.5 mils
* USB Power Trace must be 40mils width
* Length(longest)-Length(shortest)<150mils
* Maxium trace length <5"

FRONT PANEL USB CONNECTOR FOR USB PORT 0,1

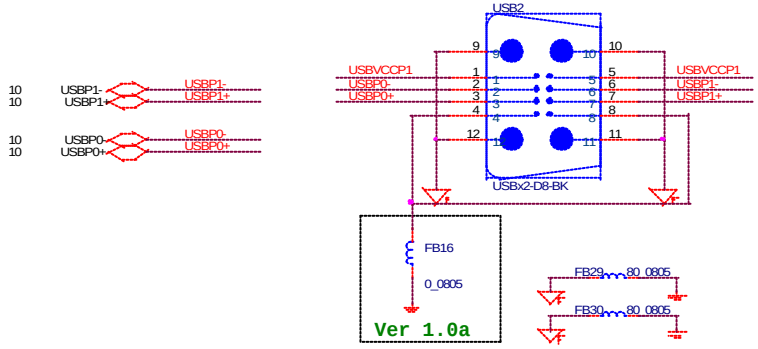

Micro Star Restricted Secret

Title	USB Connectors	Rev
Document Number	MS-6539N1	1.0c
MICRO-STAR INT'L CO.,LTD. No. 69, Li-De St, Jung-He City, Taipei Hsien, Taiwan http://www.msi.com.tw	Last Revision Date: Monday, September 16, 2002 Sheet 19 of 29	

ATX CONNECTOR

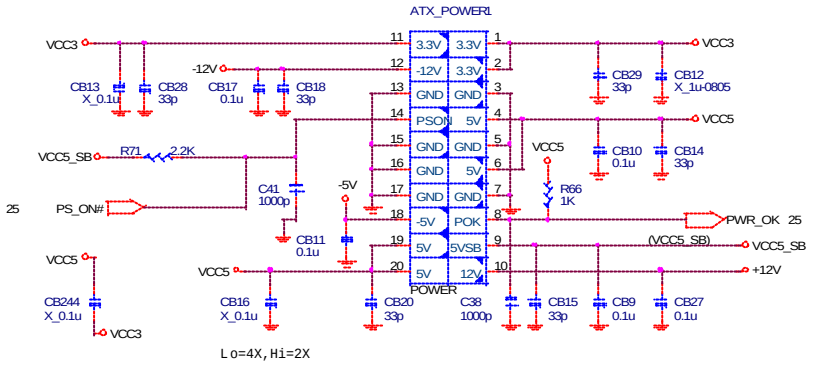

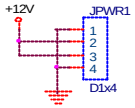

REGULATORS OUTPUT DECOUPLING CAPACITORS

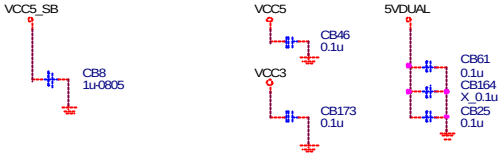

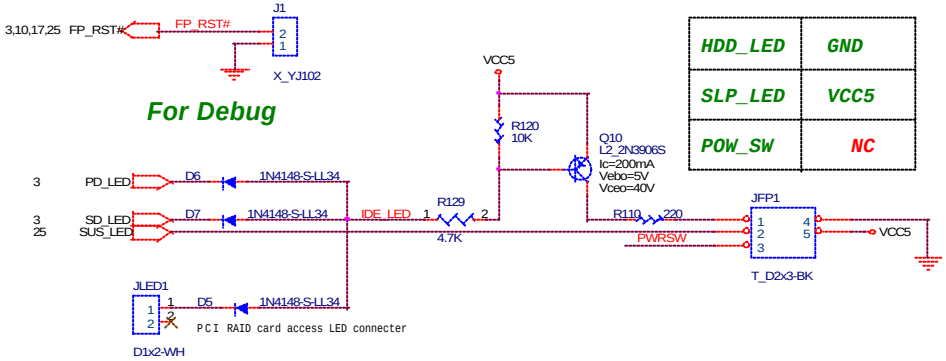

HDD_LED	GND
SLP_LED	VCC5
POW_SW	NC

SPEAKER

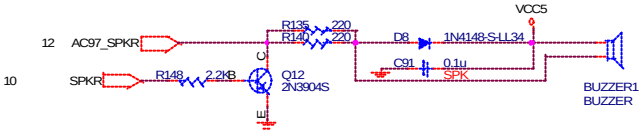

POWER BUTTON

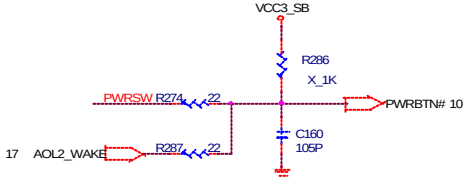

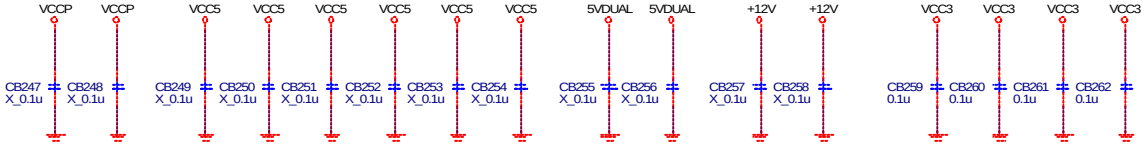

Micro Star Restricted Secret

Title	Front Panel,Power Conn. & Speaker	Rev
Document Number	MS-6539N1	1.0c
MICRO-STAR INT'L CO.,LTD. No. 69, Li-De St, Jung-He City, Taipei Hsien, Taiwan http://www.msi.com.tw	Last Revision Date: Tuesday, September 03, 2002	
	Sheet 20 of 29	

Firware Hub (FWH)

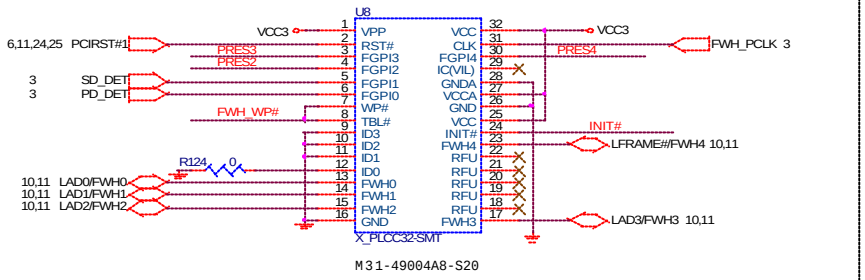

FWH RESISTORS

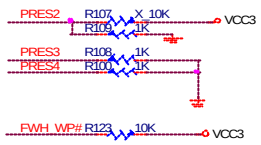

PCB OTHER COMPONENT

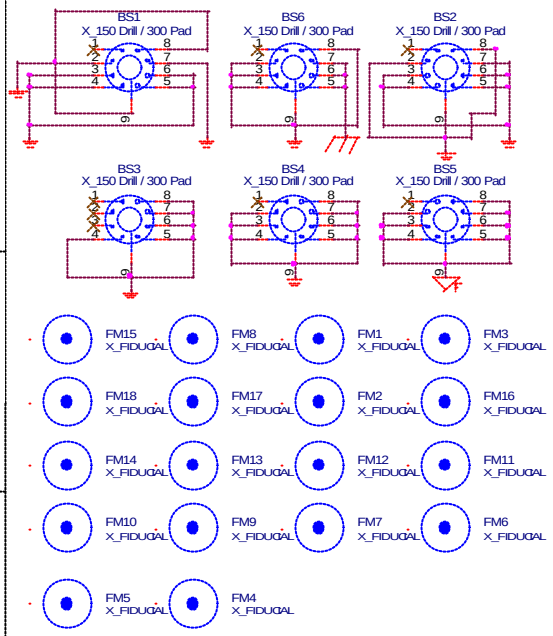

FWH DECOUPLING CAPACITORS

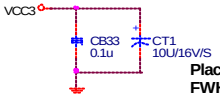

Place Cap. as Close to FWH< 350 mil

SIMULATION TRACE

FWH INIT Signal Voltage Translation Block

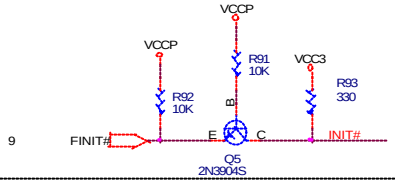

AGP3.3V

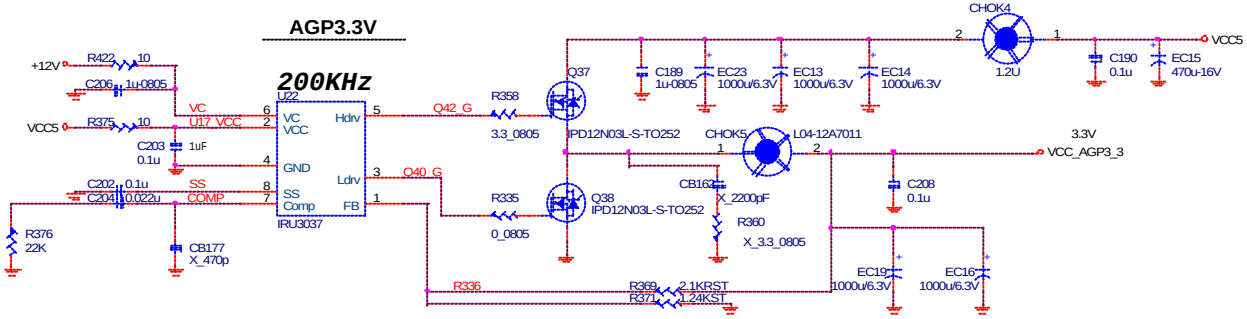

VCC_AGP=1.25 X (1 + R1232 / R1233)

3.36V=1.25 X (1 + 2.1K/ 1.24K)

GMCH 1.5V POWER TRANSLATOR

For internal AGP,Hun link interface

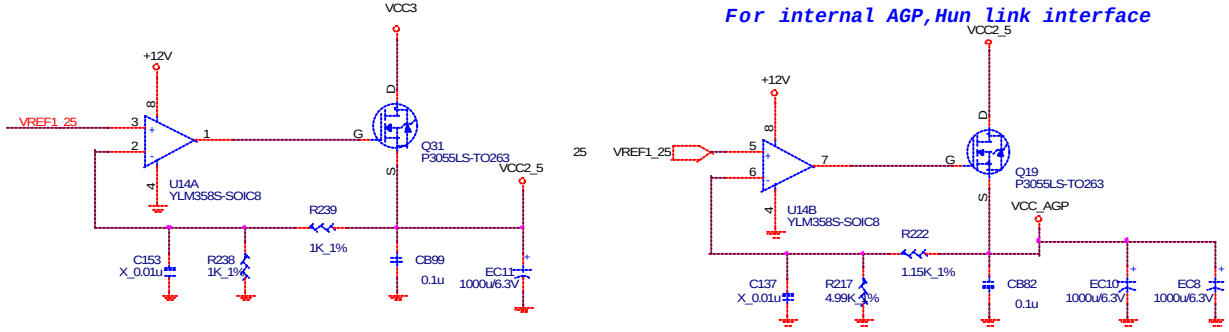

FWH write protect

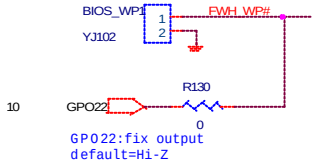

BIOS_WP	
Close	Locked
Open	Unlocked

Micro Star Restricted Secret

Title	FWH	Rev
Document Number	MS-6539N1	1.0c
MICRO-STAR INT'L CO.,LTD. No. 69, Li-De St, Jung-He City, Taipei Hsien, Taiwan http://www.msi.com.tw	Last Revision Date: Monday, September 16, 2002	
	Sheet 21 of 29	

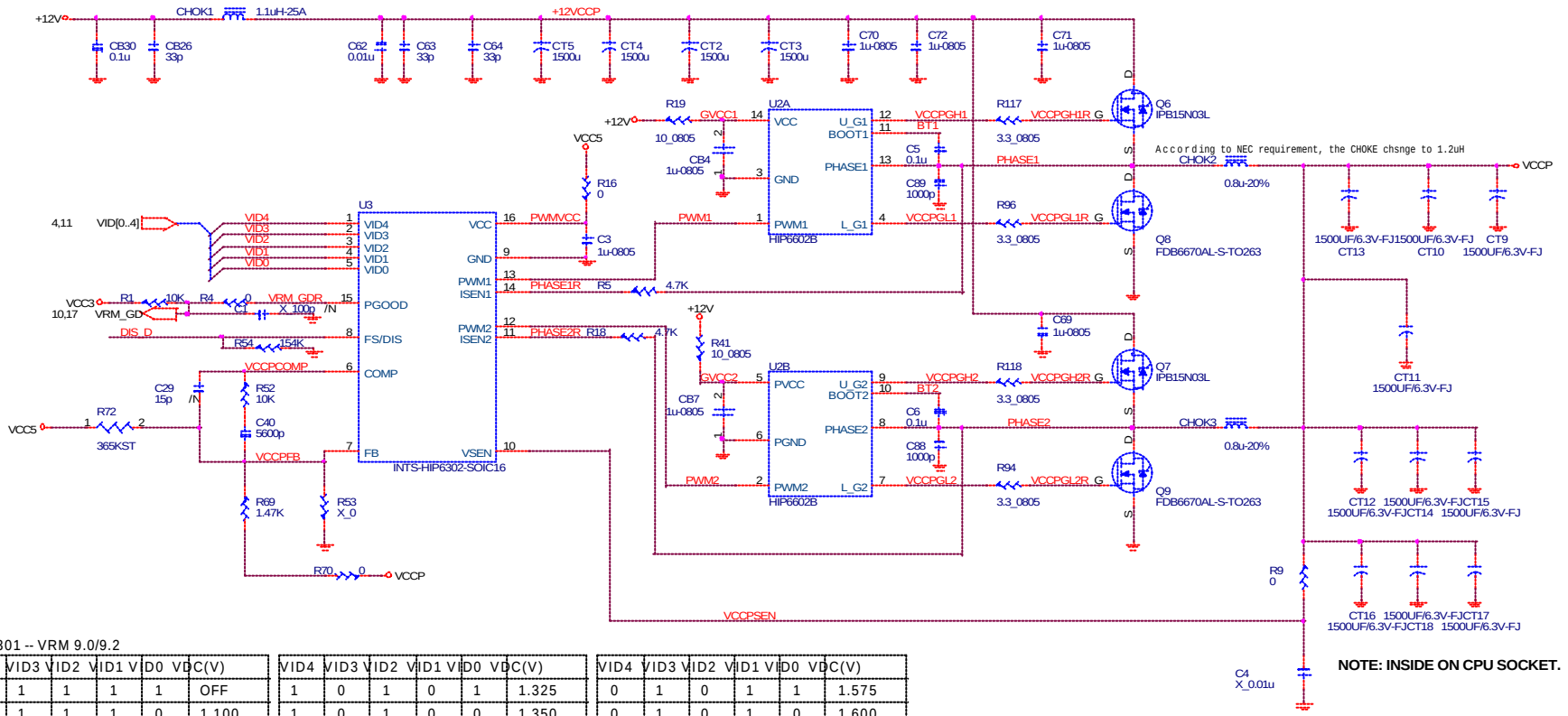

HIP6301 -- VRM 9.0/9.2

VID4	VID3	VID2	VID1	VID0	VDC(V)	VID4	VID3	VID2	VID1	VID0	VDC(V)	VID4	VID3	VID2	VID1	VID0	VDC(V)
1	1	1	1	1	OFF	1	0	1	0	1	1.325	0	1	0	1	1	1.575
1	1	1	1	0	1.100	1	0	1	0	0	1.350	0	1	0	1	0	1.600
1	1	1	0	1	1.125	1	0	0	1	1	1.375	0	1	0	0	1	1.625
1	1	1	0	0	1.150	1	0	0	1	0	1.400	0	1	0	0	0	1.650
1	1	0	1	1	1.175	1	0	0	0	1	1.425	0	0	1	1	1	1.675
1	1	0	1	0	1.200	1	0	0	0	0	1.450	0	0	1	1	0	1.700
1	1	0	0	1	1.225	0	1	1	1	1	1.475	0	0	1	0	1	1.725
1	1	0	0	0	1.250	0	1	1	1	0	1.500	0	0	1	0	0	1.750
1	0	1	1	1	1.275	0	1	1	0	1	1.525	0	0	0	1	1	1.775
1	0	1	1	0	1.300	0	1	1	0	0	1.550	0	0	0	1	0	1.800

PWM GOOD

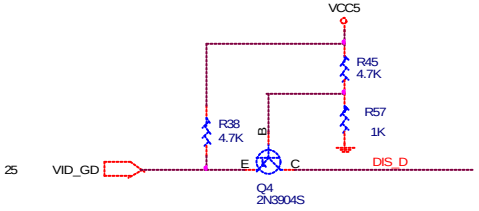

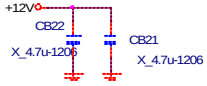

VID PULL-UP RESISTORS

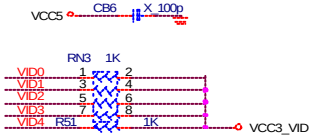

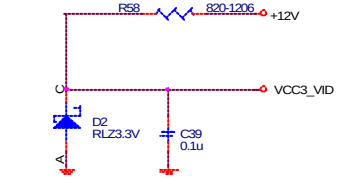

CHECK THIS

Micro Star Restricted Secret

Title	VRM 9.0	Rev
Document Number	MS-6539N1	1.0c
MICRO-STAR INT'L CO.,LTD. No. 69, Li-De St, Jung-He City, Taipei Hsien, Taiwan http://www.msi.com.tw	Last Revision Date: Tuesday, September 03, 2002	
	Sheet 22 of 29	

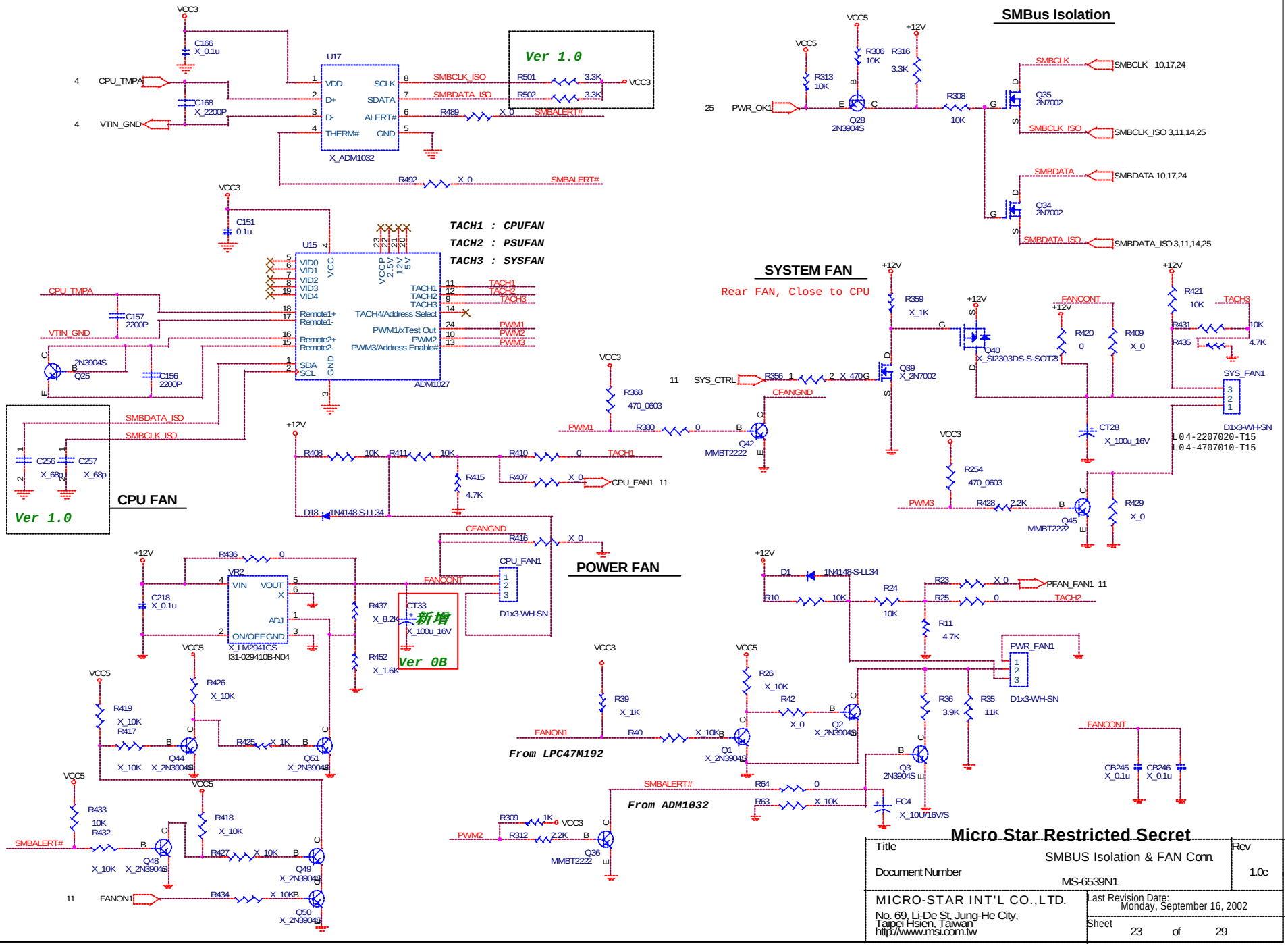
SMBus Isolation
SYSTEM FAN
Rear FAN, Close to CPU
CPU FAN
POWER FAN
Ver 1.0
Ver 0B
新增
TACH1 : CPUFAN
TACH2 : PSUFAN
TACH3 : SYSFAN
U17
X_ADM1032
U15
ADM1027
VCC3
VCC5
+12V
CPU_TMPA
VTIN_GND
SMBCLK_ISO
SMBDATA_ISO
SMBALERT#
SMBCLK
SMBDATA
PWR_OK1
SYS_CTRL
CFANGND
FANCONT
CPU_FAN1
SYS_FAN1
PWR_FAN1
PFAN_FAN1
FANON1
From LPC47M192
From ADM1032
D1x3-WH-SN
L04-2207020-T15
L04-4707010-T15
I31-029410B-N04
Micro Star Restricted Secret
Title
SMBUS Isolation & FAN Conn.
Rev
1.0c
Document Number
MS-6539N1
MICRO-STAR INT'L CO.,LTD.
No. 69, Li-De St, Jung-He City,
Taipei Hsien, Taiwan
http://www.msi.com.tw
Last Revision Date:
Monday, September 16, 2002
Sheet
23
of
29

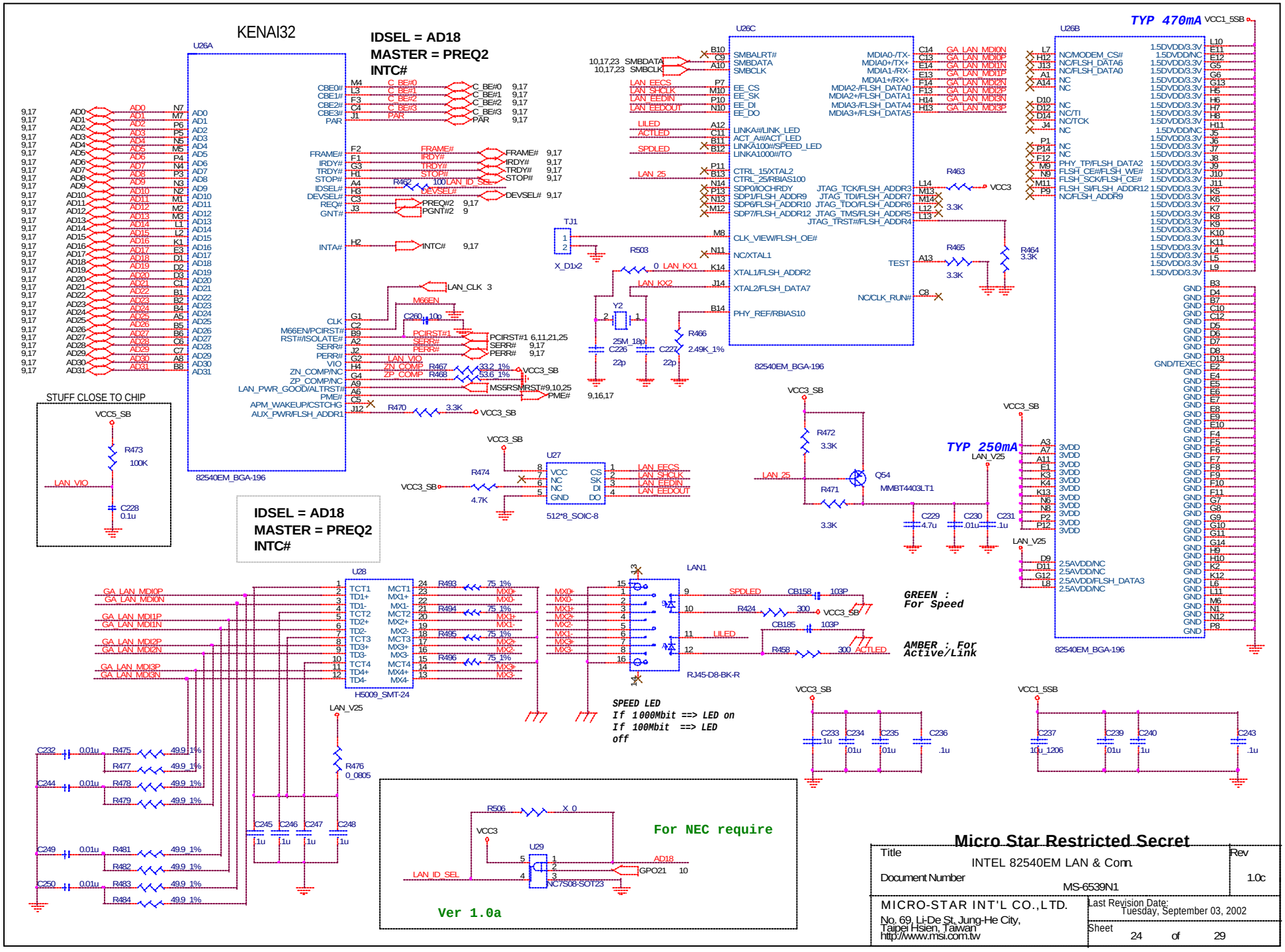
KENAI32
U26A
IDSEL = AD18
MASTER = PREQ2
INTC#
82540EM_BGA-196
STUFF CLOSE TO CHIP
VCC5_SB
R473
100K
LAN_VIO
C228
0.1u
IDSEL = AD18
MASTER = PREQ2
INTC#
U26C
82540EM_BGA-196
U26B
TYP 470mA
VCC1_5SB
TYP 250mA
LAN_V25
82540EM_BGA-196
U27
512*8_SOIC-8
U28
H5009_SMT-24
LAN1
RJ45-D8-BK-R
GREEN : For Speed
AMBER : For Active/Link
SPEED LED
If 1000Mbit ==> LED on
If 100Mbit ==> LED off
U29
NC7S08-SOT23
For NEC require
Ver 1.0a
Micro Star Restricted Secret
Title
INTEL 82540EM LAN & Conn.
Rev
1.0c
Document Number
MS-6539N1
MICRO-STAR INT'L CO.,LTD.
No. 69, Li-De St, Jung-He City,
Taipei Hsien, Taiwan
http://www.msi.com.tw
Last Revision Date:
Tuesday, September 03, 2002
Sheet
24
of
29

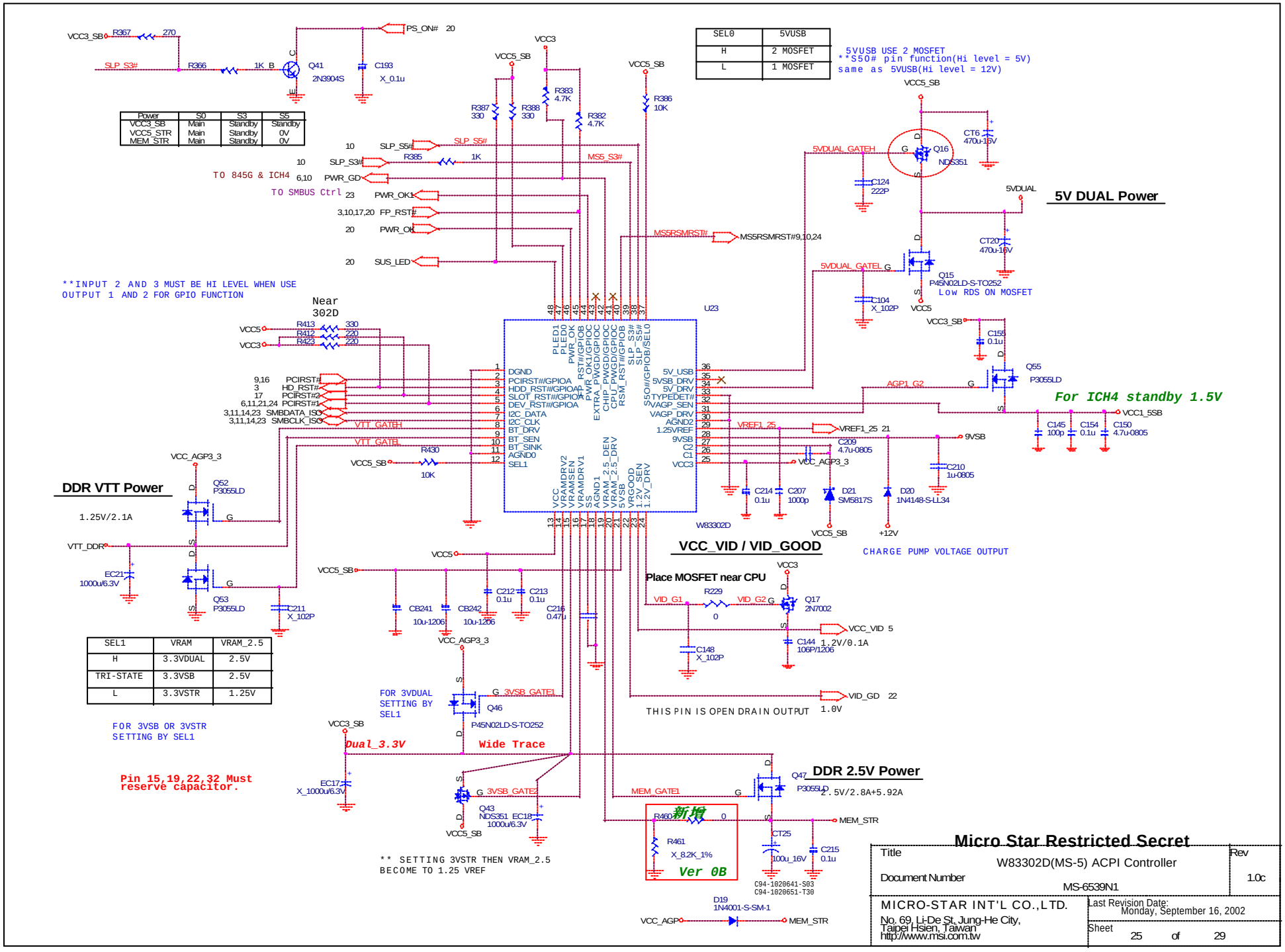
VCC3_SB
R367
270
SLP_S3#
R366
1K
B
Q41
2N3904S
C
E
C193
X_0.1u
PS_ON# 20
VCC3
VCC5_SB
R387
330
R388
330
R383
4.7K
R382
4.7K
R386
10K
SEL0 | 5VUSB
H | 2 MOSFET
L | 1 MOSFET
5VUSB USE 2 MOSFET
**S50# pin function(Hi level = 5V)
same as 5VUSB(Hi level = 12V)
Power | S0 | S3 | S5
VCC3_SB | Main | Standby | Standby
VCC5_STR | Main | Standby | 0V
MEM_STR | Main | Standby | 0V
10 SLP_S5# SLP_S5#
10 SLP_S3# R385 1K MS5_S3#
TO 845G & ICH4
6,10 PWR_GD
TO SMBUS Control
23 PWR_OK1
3,10,17,20 FP_RST#
20 PWR_OK
20 SUS_LED
MS5RSMRST#
MS5RSMRST#9,10,24
5VDUAL_GATEH
Q16
NDS351
CT6
470u-16V
C124
222P
5VDUAL
5V DUAL Power
CT20
470u-16V
5VDUAL_GATEL
Q15
P45N02LD-S-TO252
Low RDS ON MOSFET
C104
X_102P
VCC5
VCC3_SB
C155
0.1u
Q55
P3055LD
AGP1_G2
For ICH4 standby 1.5V
VCC1_5SB
C145
100p
C154
0.1u
C150
4.7u-0805
**INPUT 2 AND 3 MUST BE HI LEVEL WHEN USE
OUTPUT 1 AND 2 FOR GPIO FUNCTION
Near
302D
VCC5
VCC3
R413 330
R412 220
R423 220
9,16 PCIRST#
3 HD_RST#
17 PCIRST#2
6,11,21,24 PCIRST#1
3,11,14,23 SMBDATA_ISO
3,11,14,23 SMBCLK_ISO
VTT_GATEH
VTT_GATEL
R430
10K
VCC5_SB
U23
W83302D
DGND
PCIRST#/GPIOA
HDD_RST#/GPIOA
SLOT_RST#/GPIOA
DEV_RST#/GPIOA
I2C_DATA
I2C_CLK
BT_DRV
BT_SEN
BT_SINK
AGND0
SEL1
PLED1
PLED0
PWR_OK
RST#/GPIOB
PWR_OK1/GPIOC
EXTRA_PWGD/GPIOC
CHIP_PWGD/GPIOC
CPU_PWGD/GPIOC
RSM_RST#/GPIOB
SLP_S3#
SLP_S5#
S50#/GPIOB/SEL0
5V_USB
5VSB_DRV
5V_DRV
TYPEDET#
VAGP_SEN
VAGP_DRV
AGND2
1.25VREF
9VSB
C2
C1
VCC3
VCC
VRAMDRV2
VRAMSEN
VRAMDRV1
SS
AGND1
VRAM_2.5_DEN
VRAM_2.5_DRV
5VSB
VRGOOD
2.5V_EN
1.2V_DRV
VREF1_25
VREF1_25 21
9VSB
C209
4.7u-0805
VCC_AGP3_3
C210
1u-0805
C214
0.1u
C207
1000p
D21
SM5817S
D20
1N4148-S-LL34
VCC5_SB
+12V
CHARGE PUMP VOLTAGE OUTPUT
DDR VTT Power
1.25V/2.1A
VCC_AGP3_3
Q52
P3055LD
VTT_DDR
EC21
1000u/6.3V
Q53
P3055LD
C211
X_102P
VCC5
VCC5_SB
CB241
10u-1206
CB242
10u-1206
C212
0.1u
C213
0.1u
C216
0.47u
VCC_AGP3_3
VCC_VID / VID_GOOD
Place MOSFET near CPU
VCC3
VID_G1
R229
0
VID_G2
Q17
2N7002
VCC_VID 5
C144
106P/1206
1.2V/0.1A
C148
X_102P
VID_GD 22
1.0V
THIS PIN IS OPEN DRAIN OUTPUT
SEL1 | VRAM | VRAM_2.5
H | 3.3VDUAL | 2.5V
TRI-STATE | 3.3VSB | 2.5V
L | 3.3VSTR | 1.25V
FOR 3VSB OR 3VSTR
SETTING BY SEL1
FOR 3VDUAL
SETTING BY
SEL1
3VSB_GATE1
Q46
P45N02LD-S-TO252
VCC3_SB
Dual_3.3V
Wide Trace
Pin 15,19,22,32 Must
reserve capacitor.
EC17
X_1000u/6.3V
3VSB_GATE2
Q43
NDS351
EC18
1000u/6.3V
VCC5_SB
** SETTING 3VSTR THEN VRAM_2.5
BECOME TO 1.25 VREF
MEM_GATE1
Q47
P3055LD
DDR 2.5V Power
2.5V/2.8A+5.92A
R460
新增
0
R461
X_8.2K_1%
Ver 0B
MEM_STR
CT25
100u_16V
C215
0.1u
C94-1020641-S03
C94-1020651-T30
D19
1N4001-S-SM-1
VCC_AGP
MEM_STR
Micro Star Restricted Secret
Title
W83302D(MS-5) ACPI Controller
Rev
1.0c
Document Number
MS-6539N1
MICRO-STAR INT'L CO.,LTD.
No. 69, Li-De St, Jung-He City,
Taipei Hsien, Taiwan
http://www.msi.com.tw
Last Revision Date:
Monday, September 16, 2002
Sheet
25 of 29

Video Connector

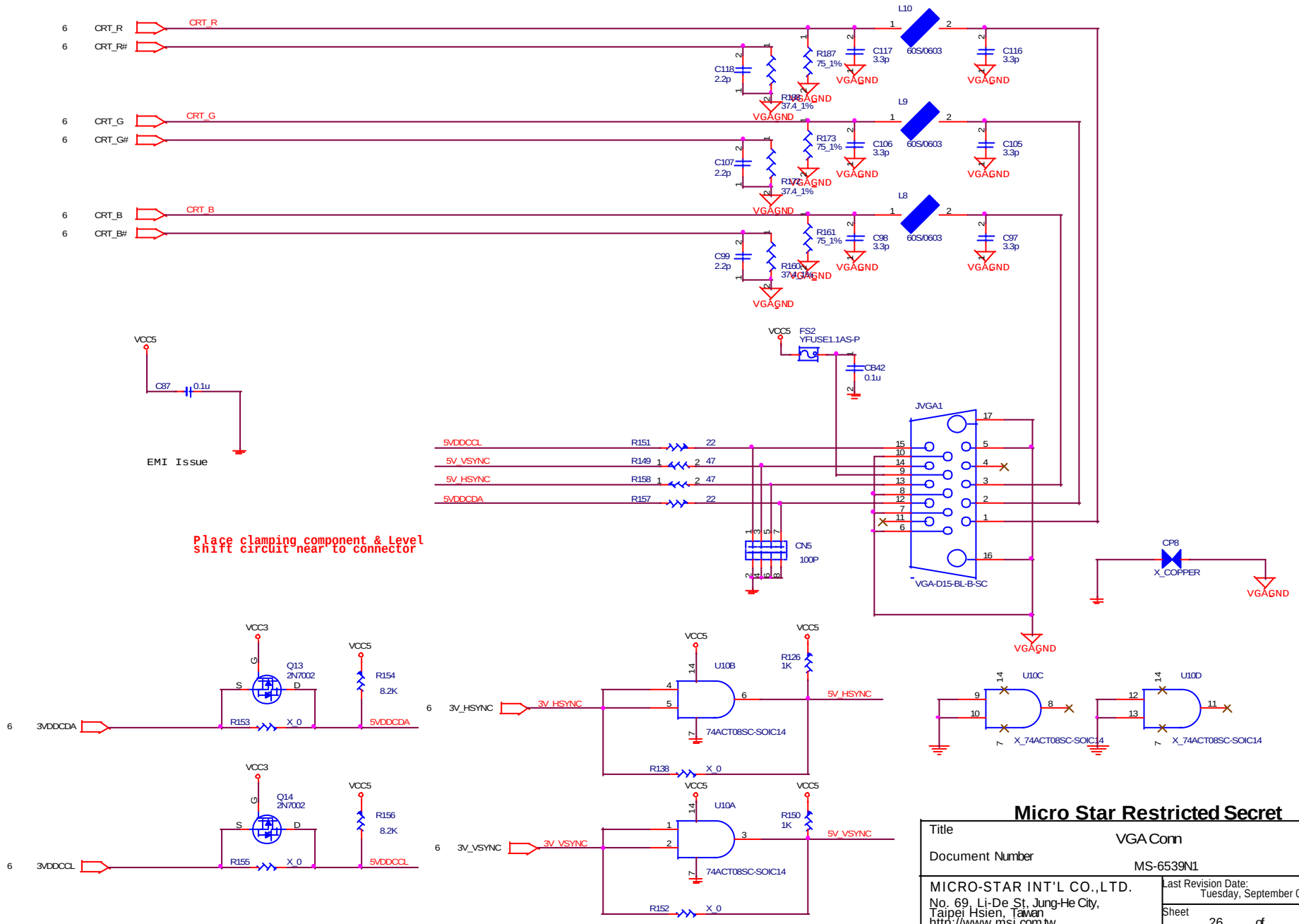

Micro Star Restricted Secret

Title	VGA Conn	Rev
Document Number	MS-6539N1	1.0c
MICRO-STAR INT'L CO.,LTD. No. 69, Li-De St, Jung-He City, Taipei Hsien, Taiwan http://www.msi.com.tw	Last Revision Date: Tuesday, September 03, 2002	
	Sheet 26 of 29	

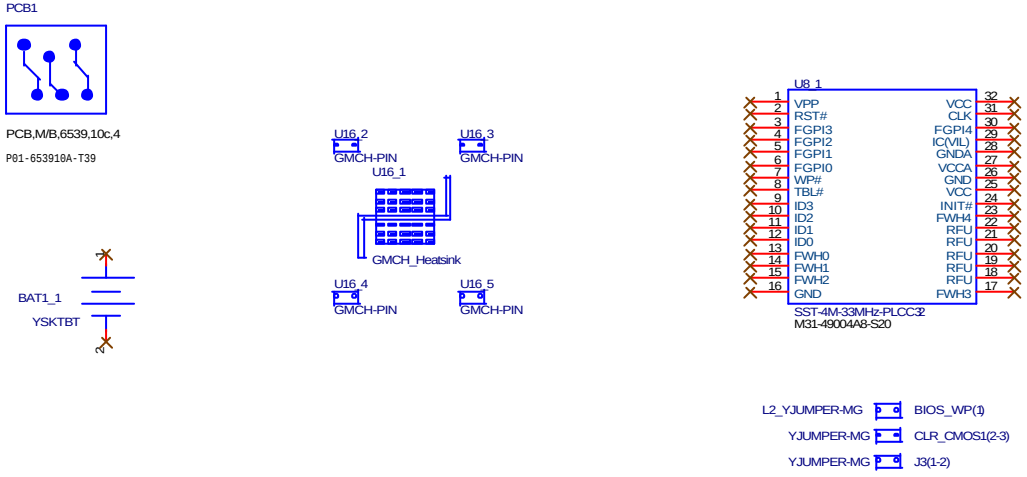

Pin Header Key Protect
JFP1 Pin 6 COM1 Pin 10 COM2 Pin 10

Micro Star Restricted Secret

Title	Manual Parts	Rev
Document Number	MS-6539N1	1.0c
MICRO-STAR INT'L CO.,LTD. No. 69, Li-De St, Jung-He City, Taipei Hsien, Taiwan http://www.msi.com.tw	Last Revision Date: Wednesday, September 04, 2002 Sheet 27 of 29	

Power Delivery Map

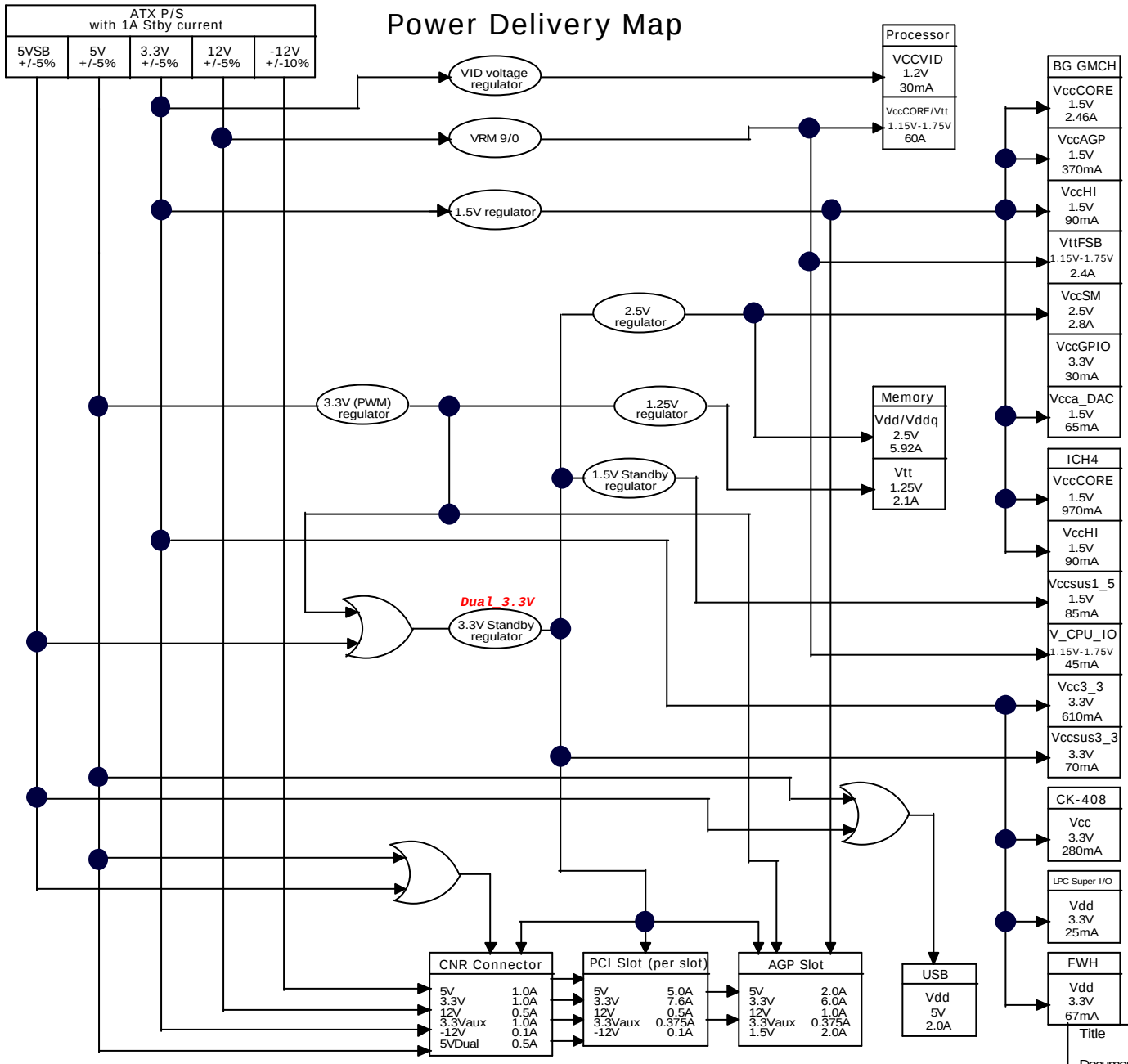

Micro Star Restricted Secret

Title	Manual Parts	Rev
Document Number	MS-6539N1	1.0c
MICRO-STAR INT'L CO.,LTD. No. 69, Li-De St, Jung-He City, Taipei Hsien, Taiwan http://www.msi.com.tw	Last Revision Date: Tuesday, September 03, 2002	
	Sheet 28 of 29	

FWH

GPIO Pin	Type	Function
GPI 0	I	Pull down through 8.2K ohms (unused)
GPI 1	I	Pull down through 8.2K ohms (unused)
GPI 2	I	P1 customer defined
GPI 3	I	P1 customer defined
GPI 4	I	Pull down through 8.2K ohms (unused)

PCI Config.

DEVICE	ICH INT Pin	IDSEL	CLOCK	CLK GEN PIN OUT
PCI Slot 1	INTA# INTB# INTC# INTD#	AD16	PCICLK0	PIN 12
PCI Slot 2	INTB# INTC# INTD# INTA#	AD17	PCICLK1	PIN 14
PCI LAN 82540EM	INTC# INTD# INTA# INTB#	AD18	LAN_CLK	PIN 11

**ICH4 reserved PCI address line AD22 for the PCI-to-ISA Bridge's IDSEL input.*

DIMM Config.

DEVICE	ADDRESS	CLOCK
DIMM 1	1010000B	DCLK0/DCLK0# DCLK1/DCLK1# DCLK2/DCLK2#
DIMM 2	1010001B	DCLK3/DCLK3# DCLK4/DCLK4# DCLK5/DCLK5#

DATE	Rev	Description
2002/ 5/18	0A	The initial version.
2002/ 6/10	0B	P.03 To exchange the reference name with IDE1 and IDE2. P.03 Add R486 for PCI_LAN clock. P.09 Add the PREQ/PGNT2 for PCI_LAN. P.09 Deleted the 82562ET circuit. P.10 Add the R485 for ICH4-GPIO11 pull-up(SMBALERT#). P.13 Modify headphone-out circuit(R280,R199). P.13 Modify U11 circuit capcitor from 47uF(EC6) to 100uF(CT33). P.13 Deleted the c122. P.18 Deleted the WOM connector circuit for space saving. P.18 Deleted the Wake On LAN Header circuit for space saving. P.18 Deleted the CT7 and CT8. P.18 To exchange the reference name with COM1 and COM2. P.23 Modify CPU fan circuit capcitor from 22uF(EC20) to 100uF(CT33). P.24 Modify LAN solution from 82562ET to 82540EM(NEC requirement). P.25 Modify the MEM_STR circuit.
2002/ 6/11	0B	P.24 Modify LAN_V15 and LAN_V25 circuit because Total power dissipation issue .
2002/ 6/13	0B	P.23 Add the R490 and 491 for U15.
2002/ 6/17	0B	P.19 Deleted the L5,L17 from USB power circuit. P.27 Add the C254 for PCI-SLOT RST#(for SI).
2002/ 6/18	0B	P.03 Add the C255 for LANCLK (EMI). P.24 Modify LAN LED definition(GREEN for speed; AMBER for Active/link).
2002/ 6/20	0B	P.24 The U23-pin25 connect to VCC_AGP3_3 because layout issue .
2002/ 6/24	0B	P.08 Deleted the CT23, Added the EC23 and CB243. P.25 Deleted the CT30, Added the CB241 and CB242.
2002/ 6/25	0B	P.19 Deleted the L4,L16 from USB power circuit.
2002/ 6/27	0B	P.10 ADd the R497 and 498 for S5.(To fix DDR 2.5V abnormally when the system go to S4).
2002/ 7/25	1.0	P.6 Deleted the R332(0ohm). P.9 Deleted the R215(0ohm). P.11 Deleted the R65(0ohm). P.11 and P.23Add the RC256~259 for SMBus Signal integrityI. P.18 Deleted the FB19(0ohm). P.23 Modify FAN control circuit(follow AD recommand). P.25 Deleted the R384(0ohm). P.25 The MS5-RSMRST# circuit merge with discrete RSMRST# circuit.
2002/ 8/05	1.0	P.24 The Delete the CT29 for EMI issue.
2002/ 8/06	1.0	P.24 The Delete the CB239,240,FB18 for EMI issue.
2002/ 8/20	1.0a 1.0a	P.13 Chassis GND and signal GND are isolated at JMIC and LINEO2. P.18 Deleted the CP1 and CP3. P.19 Chassis GND and signal GND are isolated at USB. P.21 The BS1and BS2,BS3 connect to GND.(for MIC noise issue when system in chassis) P.24 Add the U29 for 82540-Lan diasble function .
2002/ 9/03	1.0b 1.0c	Add the ESD solution. Add the ESD solution.

General SPEC

ICH4

GPIO Pin	Type	Function
GPIO 0	I	REQ#A (multifunction pin)
GPIO 1	I	REQ#B (multifunction pin)
GPIO 2	I	Pull up through 8.2K ohms (PIRQE#)
GPIO 3	I	Pull up through 8.2K ohms (PIRQF#)
GPIO 4	I	Pull up through 8.2K ohms (PIRQG#)
GPIO 5	I	Pull up through 8.2K ohms (PIRQH#)
GPIO 6	I	Pull down through 10K ohms (unused)
GPIO 7	I	For password Clear
GPIO 8	I	Pull Up to 3.3VSBY through 4.7K ohms (SIO_PME)
GPIO 9	I	Not Implemented
GPIO 10	I	Not Implemented
GPIO 11	I	SMB_ALERT (multifuntion pin)
GPIO 12	I	EXTSMI# with Pull up 10K ohms to VCC3_SB
GPIO 13	I	Pull down through 10K ohms (unused)
GPIO 14~15	I	Not Implemented
GPIO 16	O	GNT#A (multifunction pin)
GPIO 17	O	GNT#B (multifuntion pin)
GPIO 18*	O	No Connected
GPIO 19	O	No Connected
GPIO 20	O	No Connected
GPIO 21	O	Lan disable
GPIO 22	OD	No Connected
GPIO 23	O	Pull Up to 3.3V through 8.2K ohms (BIOS protect)
GPIO 24	I/O	No Connected
GPIO 25	I/O	No Connected
GPIO 26	I/O	Not Implemented
GPIO 27	I/O	No Connected
GPIO 28	I/O	No Connected
GPIO 29~31	O	Not Implemented
GPIO 32	I/O	No Connected
GPIO 33	I/O	No Connected
GPIO 34	I/O	Primary IDE ATA66/100 detection (PD_DET)
GPIO 35	I/O	Secondary IDE ATA66/100 detection (SD_DET)
GPIO 36	I/O	No Connected
GPIO 37	I/O	No Connected
GPIO 38	I/O	No Connected
GPIO 39	I/O	No Connected
GPIO 40	I/O	No Connected
GPIO 41	I/O	No Connected
GPIO 42	I/O	No Connected
GPIO 43	I/O	No Connected
GPIO 44~47	I/O	Not Implemented

** GPIO18 will toggle at 1Hz frequency.*

Micro Star Restricted Secret

Title	Manual Parts	Rev
Document Number	MS-6539N1	1.0c
MICRO-STAR INT'L CO.,LTD. No. 69, Li-De St, Jung-He City, Taipei Hsien, Taiwan http://www.msi.com.tw	Last Revision Date: Tuesday, September 03, 2002	
	Sheet 29 of 29	