Last Schematic Update Date:
10/03/2001

MS-6524 *VERSION:0A*

SIS 645/650 CHIPSET
Willamette/Northwood 478pin mPGA-B Processor Schematics

CPU:
Willamette/Northwood mPGA-478B Processor

System Brookdale Chipset:
SIS 645/650 (North Bridge)
+961A (South Bridge)

On Board Chipset:

LPC Super I/O -- W83697HF

Expansion Slots:

AGP2.0 SLOT * 1
PCI2.2 SLOT* 3
CNR SLOT * 1

01-COVER PAGE & GPI/O
02-SYSTEMBLOCK DIAGRAM
03-WILLAMETTE/NORTHWOOD mPGA-478 PROCESOR-1
04-WILLAMETTE/NORTHWOOD mPGA-478 PROCESOR-2
05-MAIN CLOCK GENERTOR
06-SDR CLOCK BUFFER
07-VRM 9.X
08-SIS645/650-1
09-SIS645/650-2
10-SIS645/650-3
11-SIS645/650-4
12-AGP SLOT &UP/DN RESISTOR
13-SDR DIMM1 & DIMM2
14-SIS961A-1
15-SIS961A-2
16-SIS961A-3
17-SIS961A-4
18-PCI1 & PCI RESET CIRCUIT
19-PCI2 & PCI3
20-REALTEK 8100L LAN
21-RJ45 & KB/MS CONNECTOR
22-IDE1 & IDE2 CONNECTOR
23-USB PORT CONNECTOR
24-AC97 CODEC
25-GAME/AUDIO CONN & FRONT AUDIO
26-CNR SLOT & FLASH MEMORY
27-LPC I/O W83697HF
28-HARDWARE MONITOR
29-PARALLEL & SERIAL PORT CONNECTOR
30-SERIAL CIRCUIT
31-VOLTAGE REGULATOR 1
32-VOLTAGE REGULATOR 2
33-ATX POWER & VGA CONNECTOR
34-FRONT PANEL
35-THERMTRIP CIRCUIT
36-DECOUPLING CAPACITOR & PCB OTHER

System Block Diagram

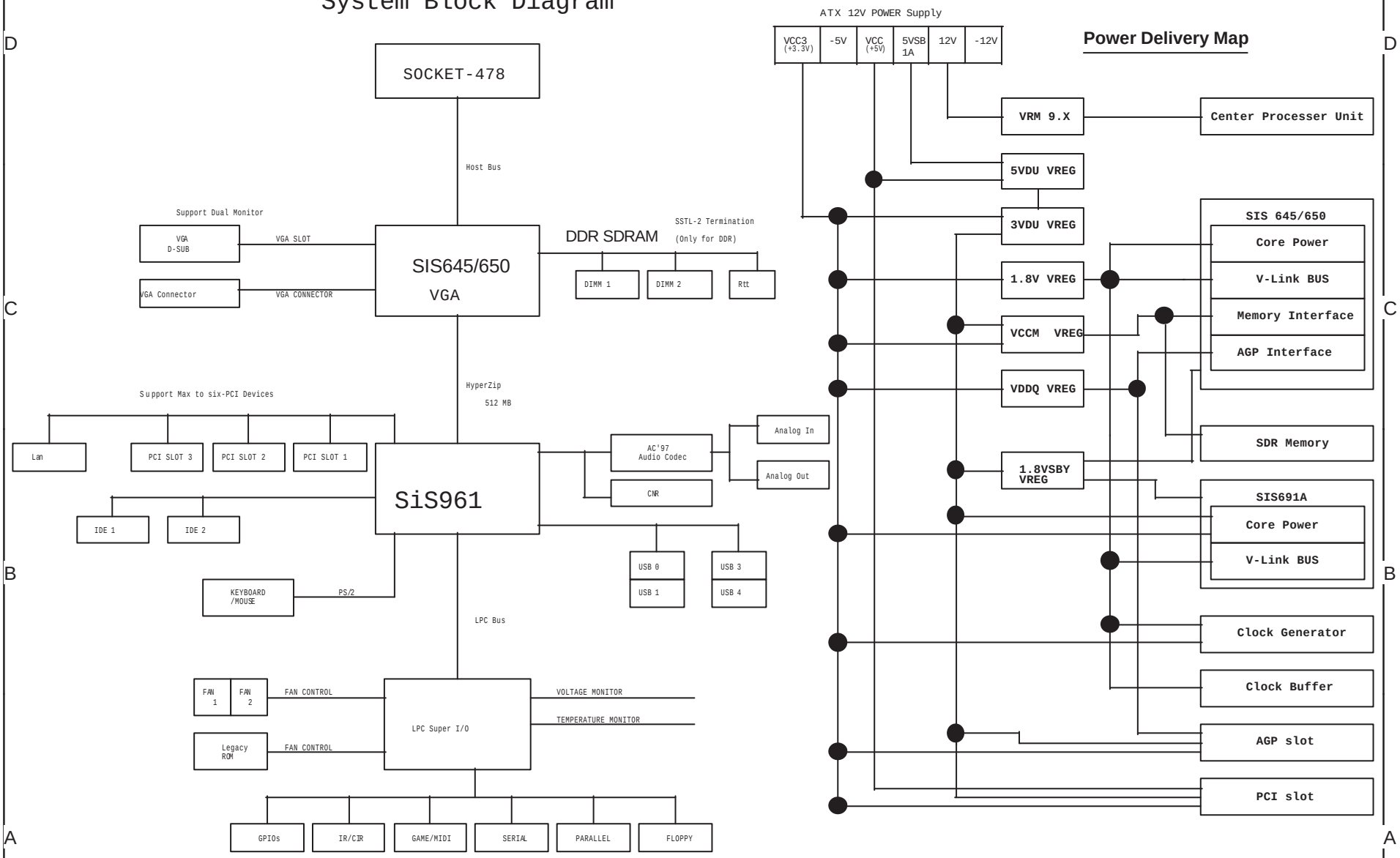

Micro-Star	Title: MS-6524	Rev: 0A
Document Number: SYSTEM BLOCK DIAGRAM		
Last Revision Date: Friday, October 05, 2001	Sheet 2 of 36	

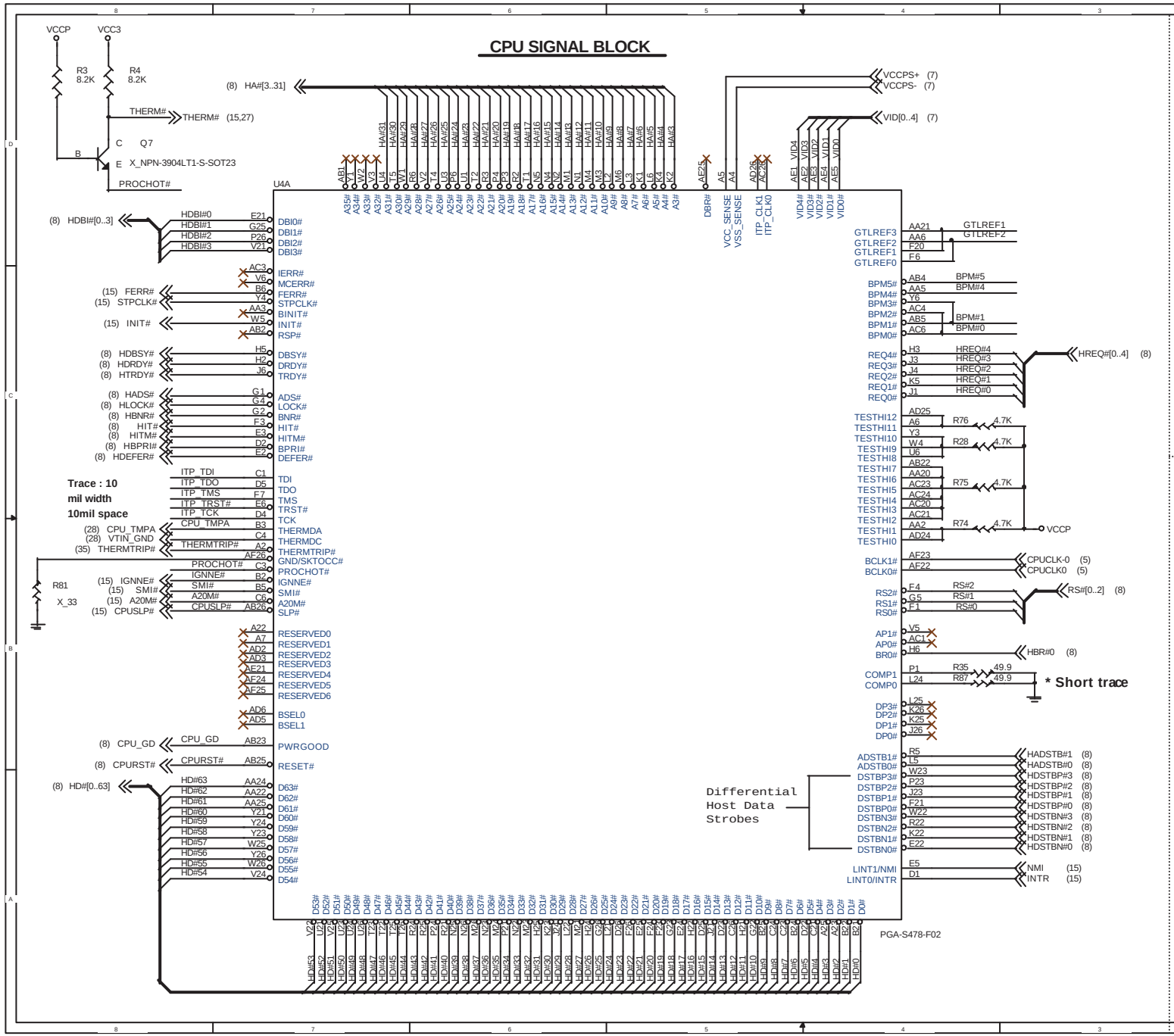

CPU GTL REFERNCE VOLTAGE BLOCK

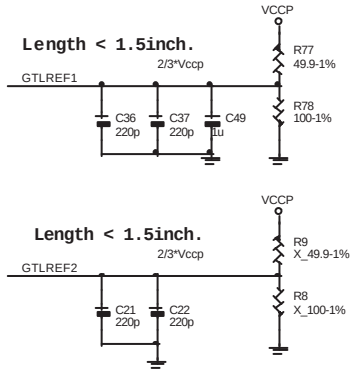

Every pin put one 220pF cap near it.
Trace Width 15mils, Space 15mils.
Keep the voltage dividers within 1.5 inches of the first GTLREF Pin

CPU ITP BLOCK

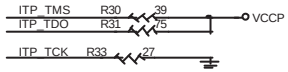

CPU STRAPPING RESISTORS

ALL COMPONENTS CLOSE TO CPU

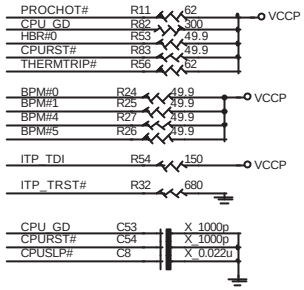

Micro-Star	Title: MS-6524	Rev: 0A
Document Number: mPGA-478 PROCESOR-1		
Last Revision Date: Monday, October 15, 2001	Sheet 3 of 36	

CPU VOLTAGE BLOCK

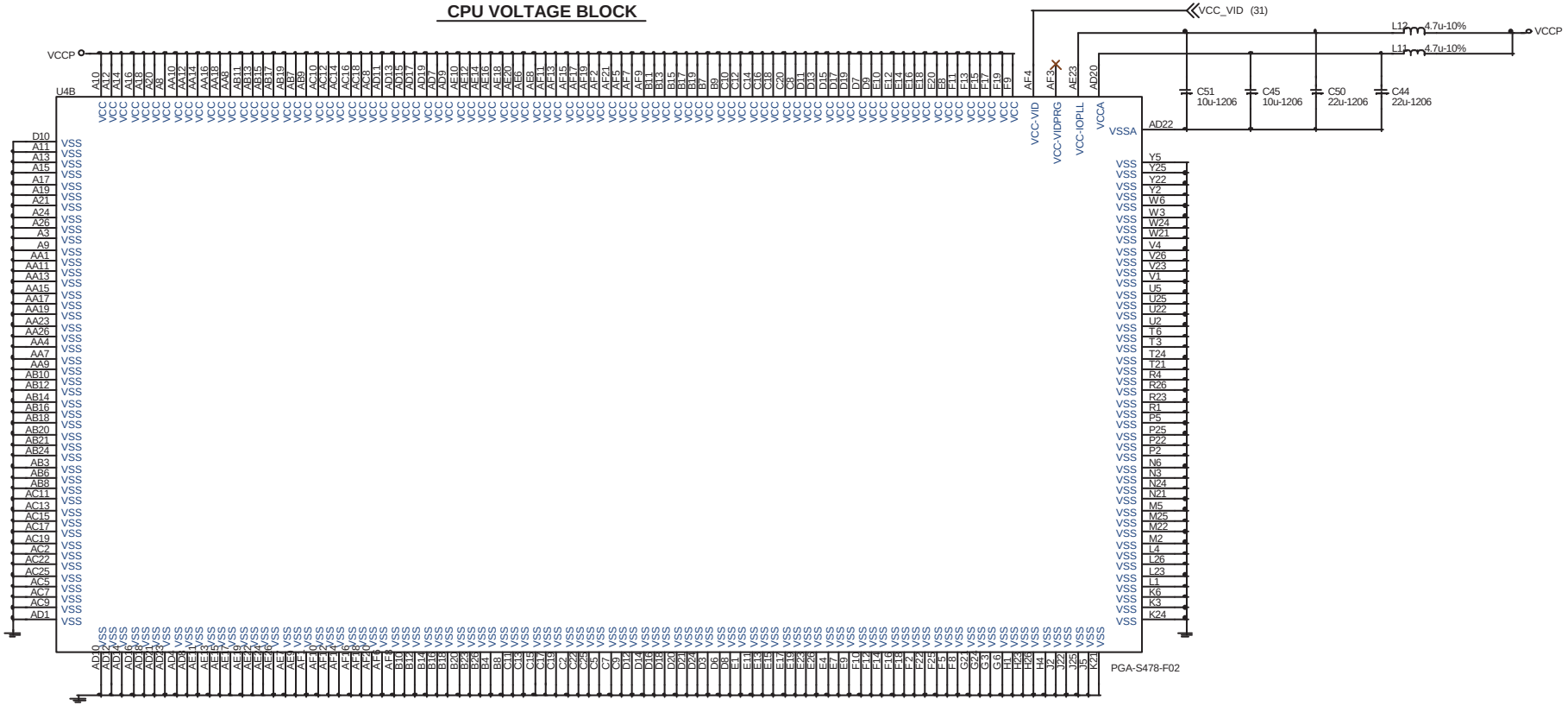

CPU DECOUPLING CAPACITORS

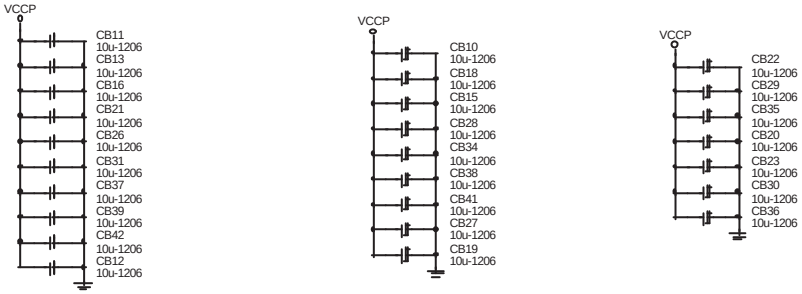

PLACE CAPS WITHIN CPU CAVITY

Micro-Star	Title: MS-6524	Rev: 0A
Document Number: mPGA-478 PROCESOR-2		
Last Revision Date: Monday, October 15, 2001	Sheet 4 of 36	

Main Clock Generator

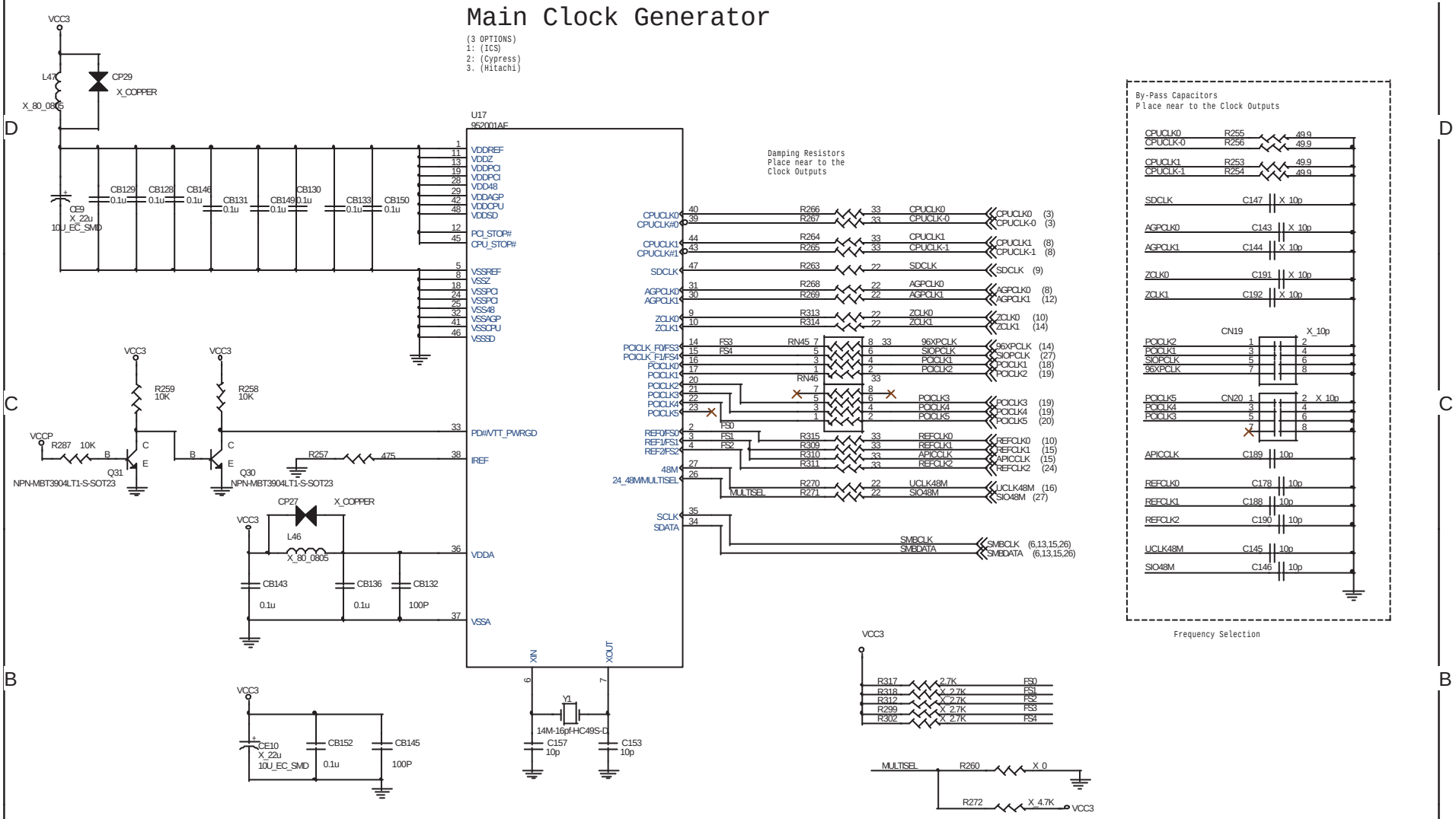

SIS650 CLOCK

FS4	FS3	FS2	FS1	FS0	CPU (MHz)	SDRAM (MHz)	ZCLK (MHz)	AGPCLK (MHz)	PCI (MHz)
0	0	0	0	0					
0	0	0	0	1					
0	0	0	1	0					
0	0	0	1	1					
0	0	1	0	0					
0	0	1	0	1					
0	0	1	1	0					
0	0	1	1	1					
0	1	0	0	0					
0	1	0	0	1					
0	1	0	1	0					
0	1	0	1	1					
0	1	1	0	0					
0	1	1	0	1					
0	1	1	1	0					
0	1	1	1	1					

SIS650 CLOCK

FS4	FS3	FS2	FS1	FS0	CPU (MHz)	SDRAM (MHz)	ZCLK (MHz)	AGPCLK (MHz)	PCI (MHz)
1	0	0	0	0					
1	0	0	0	1					
1	0	0	1	0					
1	0	0	1	1					
1	0	1	0	0					
1	0	1	0	1					
1	0	1	1	0					
1	0	1	1	1					
1	1	0	0	0					
1	1	0	0	1					
1	1	0	1	0					
1	1	0	1	1					
1	1	1	0	0					
1	1	1	0	1					
1	1	1	1	0					
1	1	1	1	1					

Micro-Star	Title: MS-6524	Rev: 0A
Document Number: MAIN CLOCK GERNERATOR		
Last Revision Date: Thursday, October 18, 2001	Sheet 5 of 36	

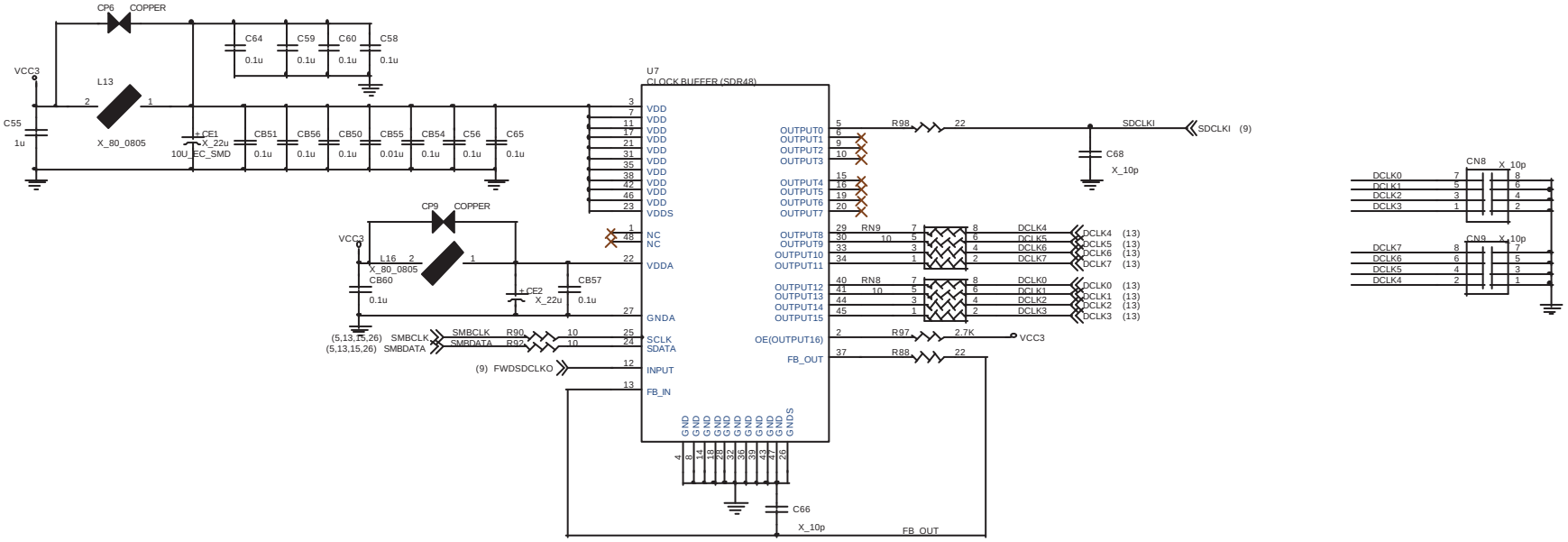

Micro-Star	Title: MS-6524	Rev: 0A
Document Number: SDR CLOCK BUFFER		
Last Revision Date: Thursday, October 18, 2001	Sheet 6 of 36	

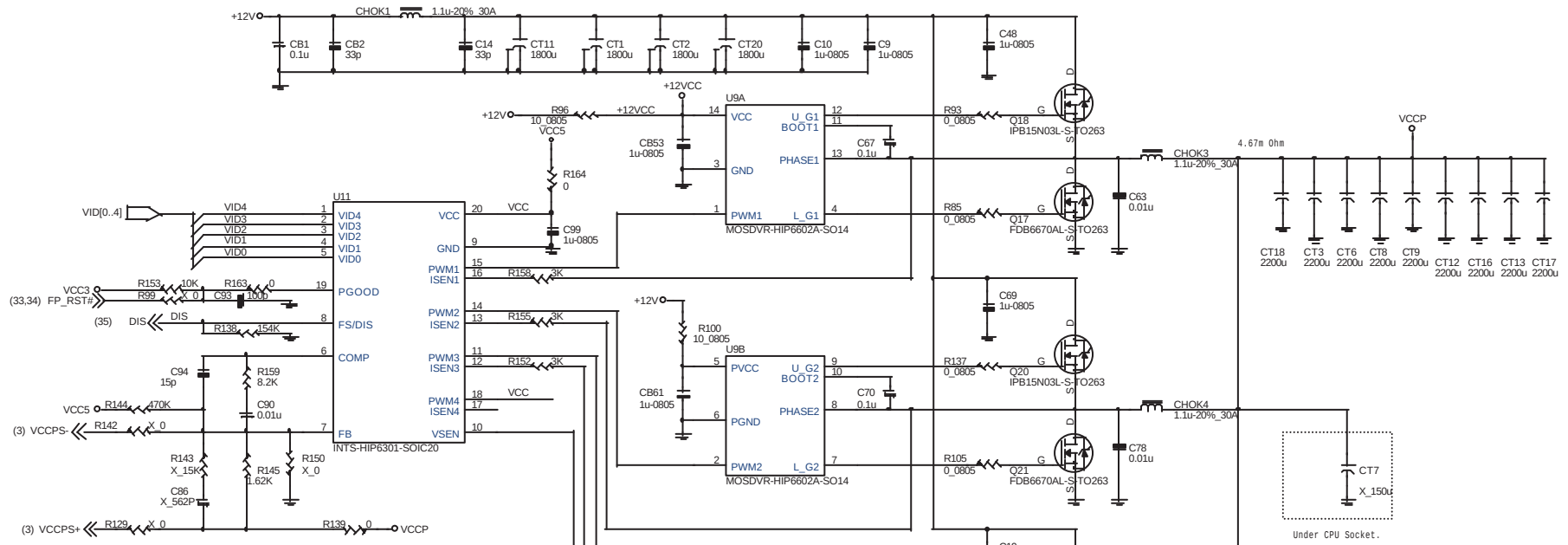

VID4	VID3	VID2	VID1	VID0	VDC(V)
1	1	1	1	0	1.100
1	1	1	0	1	1.125
1	1	1	0	0	1.150
1	1	0	1	1	1.175
1	1	0	1	0	1.200
1	1	0	0	1	1.225
1	1	0	0	0	1.250
1	0	1	1	1	1.275
1	0	1	1	0	1.300
1	0	1	0	1	1.325
1	0	1	0	0	1.350
1	0	0	1	1	1.375
1	0	0	1	0	1.400
1	0	0	0	1	1.425
1	0	0	0	0	1.450
0	1	1	1	1	1.475

VID4	VID3	VID2	VID1	VID0	VDC(V)
0	1	1	1	0	1.500
0	1	1	0	1	1.525
0	1	1	0	0	1.550
0	1	0	1	1	1.575
0	1	0	1	0	1.600
0	1	0	0	1	1.625
0	1	0	0	0	1.650
0	0	1	1	1	1.675
0	0	1	1	0	1.700
0	0	1	0	1	1.725
0	0	1	0	0	1.750
0	0	0	1	1	1.775
0	0	0	1	0	1.800
0	0	0	0	1	1.825
0	0	0	0	0	1.850
1	1	1	1	1	OFF

VID PULL-UP RESISTORS

HIP6301V DON'T NEED PULL HIGH
HIP6301 NEED PULL HIGH

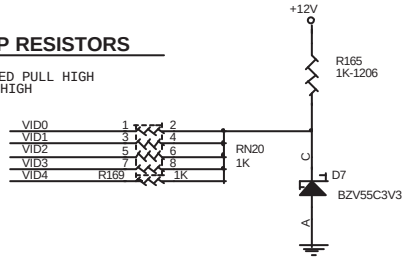

PWM GOOD

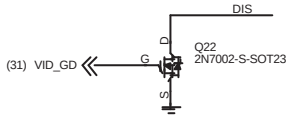

ATX12V POWER CONNECTOR

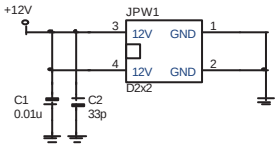

Micro-Star	Title: MS-6524	Rev: 0A
Document Number: VRM 9.X		
Last Revision Date: Monday, October 15, 2001	Sheet 7 of 36	

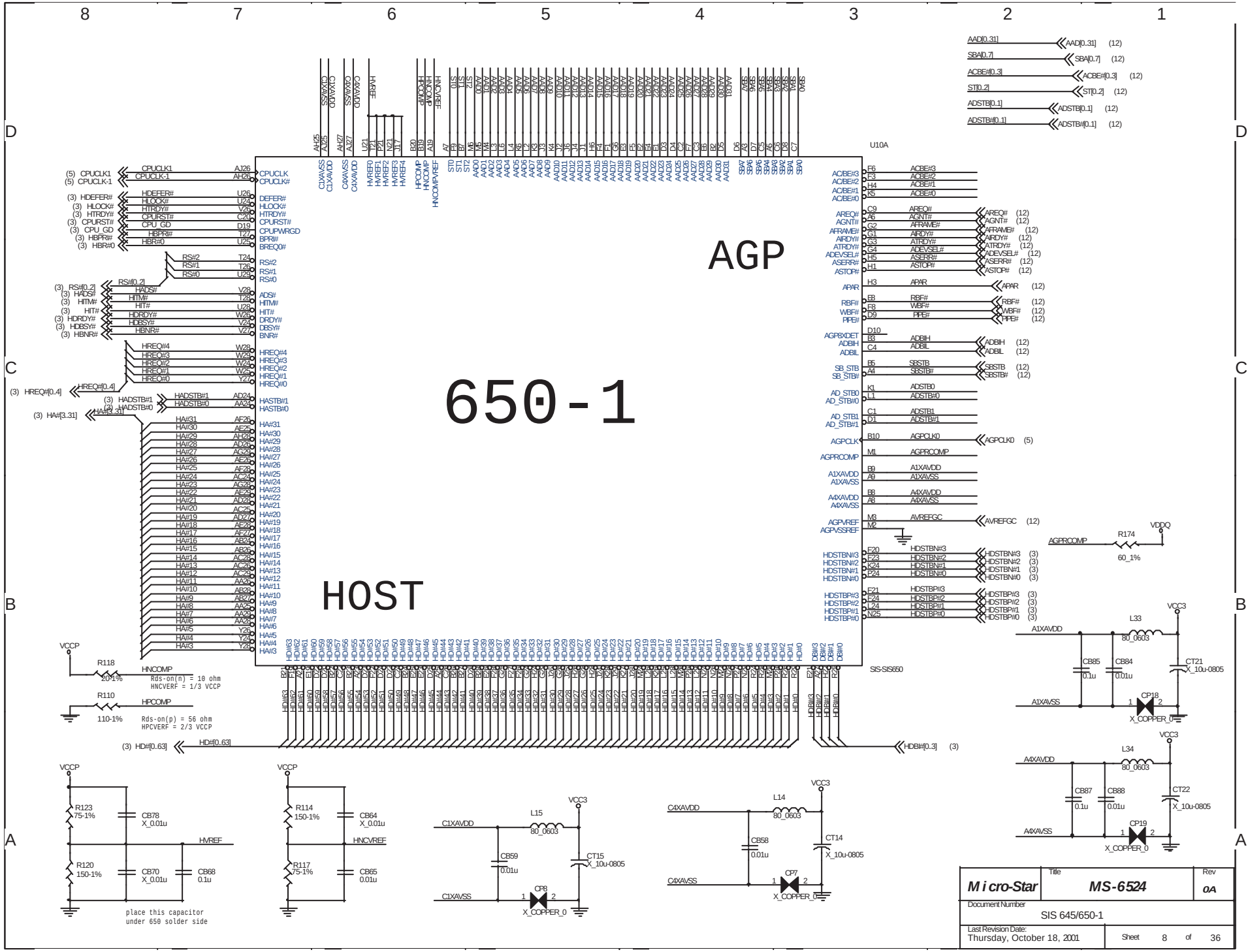
650-1
HOST
AGP
U10A
SIS-SIS650
VCCP
VCC3
VDDQ
R118
20-1%
HNCOMP
Rds-on(n) = 10 ohm
HNCVERF = 1/3 VCCP
R110
110-1%
HPCOMP
Rds-on(p) = 56 ohm
HPCVERF = 2/3 VCCP
R123
75-1%
CB78
X_0.01u
HVREF
R120
150-1%
CB70
X_0.01u
CB68
0.1u
place this capacitor
under 650 solder side
R114
150-1%
CB64
X_0.01u
HNCVREF
R117
75-1%
CB65
0.01u
C1XAVDD
L15
80_0603
CB59
0.01u
CT15
X_10u-0805
C1XAVSS
CP8
X_COPPER_0
C4XAVDD
L14
80_0603
CB58
0.01u
CT14
X_10u-0805
C4XAVSS
CP7
X_COPPER_0
A1XAVDD
L33
80_0603
CB85
0.1u
CB84
0.01u
CT21
X_10u-0805
A1XAVSS
CP18
X_COPPER_0
A4XAVDD
L34
80_0603
CB87
0.1u
CB88
0.01u
CT22
X_10u-0805
A4XAVSS
CP19
X_COPPER_0
AGPRCOMP
R174
60_1%
Micro-Star
Title
MS-6524
Rev
0A
Document Number
SIS 645/650-1
Last Revision Date:
Thursday, October 18, 2001
Sheet 8 of 36

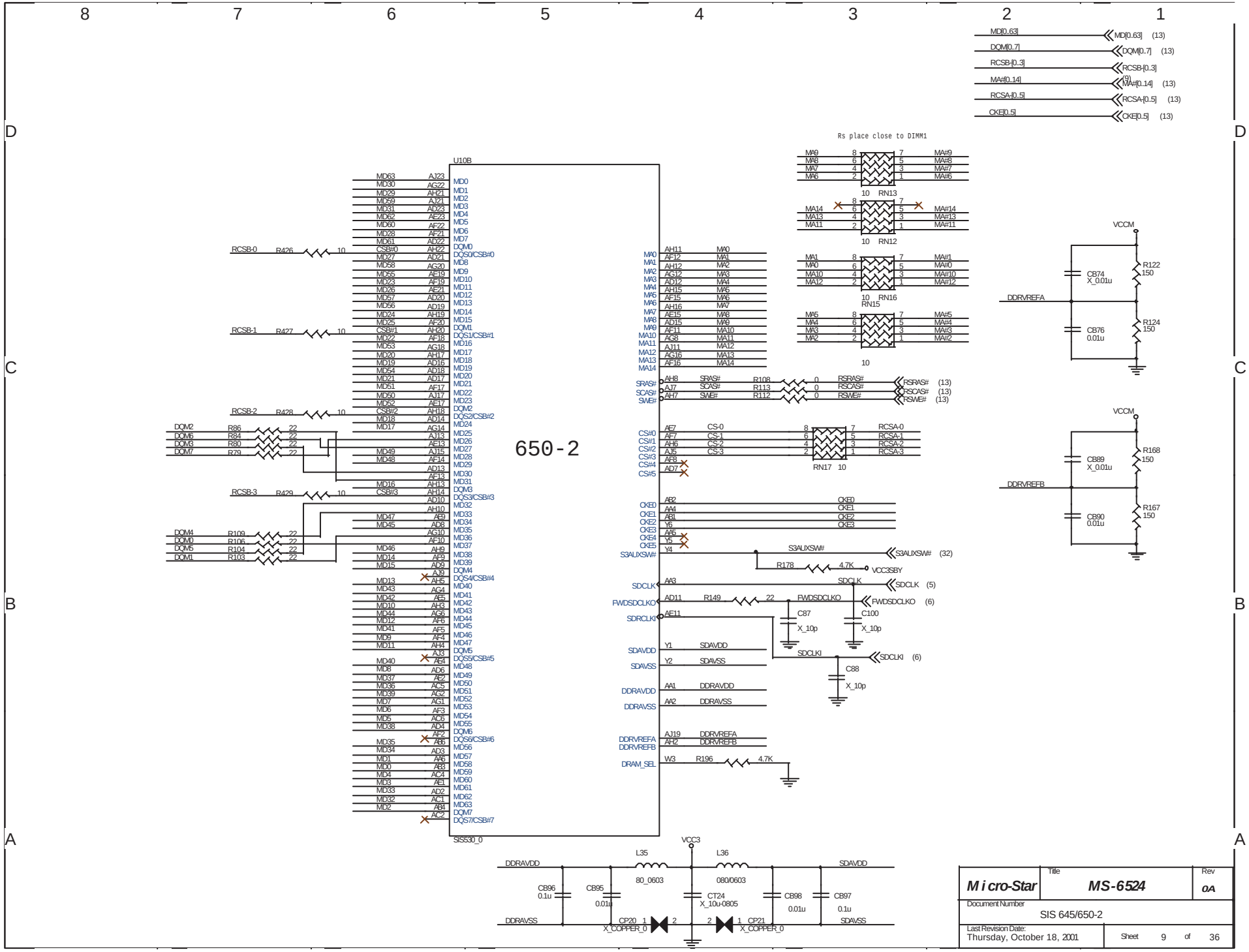

Micro-Star	Title: MS-6524	Rev: 0A
Document Number: SIS 645/650-2		
Last Revision Date: Thursday, October 18, 2001	Sheet 9 of 36	

NOTE: This page is for universal PCB design(suitable for both 645 or 650)

NB Hardware Trap Table

	0	1	Default	embedded pull-low (30~50K Ohm)
DLLEN#	enable PLL	disable PLL	0	yes
DRAM_SEL	SDR	DDR	1 [DDR]	yes
TRAP0	normal	NB debug mode	0	yes
TRAP1	TV selection, NTSC/PAL(0/1)		0	
CSYNC	enable VB		0	
RSYNC	enable VGA interface		1	
LSYNC	enable panel link		0	

(14) ZAD[0..15] — ZAD[0..15]
(14) ZSTB[0..1] — ZSTB[0..1]
(14) ZSTB-[0..1] — ZSTB-[0..1]

U10C
SIS530_0

VGA

Stereo Glass

HyperZip

650-3

(5) ZCLK0 — ZCLK0 V3 — ZCLK
(14) ZUREQ — ZUREQ U6 — ZUREQ
(14) ZDREQ — ZDREQ U1 — ZDREQ
ZSTB0 T3 — ZSTB0
ZSTB-0 T1 — ZSTB#0
ZSTB1 P1 — ZSTB1
ZSTB-1 P3 — ZSTB#1
ZAD0 T4 — ZAD0
ZAD1 R3 — ZAD1
ZAD2 T5 — ZAD2
ZAD3 T6 — ZAD3
ZAD4 R2 — ZAD4
ZAD5 R6 — ZAD5
ZAD6 R1 — ZAD6
ZAD7 R4 — ZAD7
ZAD8 P4 — ZAD8
ZAD9 N3 — ZAD9
ZAD10 P5 — ZAD10
ZAD11 P6 — ZAD11
ZAD12 N1 — ZAD12
ZAD13 N6 — ZAD13
ZAD14 N2 — ZAD14
ZAD15 N4 — ZAD15
ZVREF U3 — ZVREF
VDDZCMP V5 — VDDZCMP
ZCMP_N U4 — ZCMP_N
ZCMP_P U2 — ZCMP_P
VSSZCMP V6 — VSSZCMP
Z1XAVDD W1 — Z1XAVDD
Z1XAVSS W2 — Z1XAVSS
Z4XAVDD V2 — Z4XAVDD
Z4XAVSS V1 — Z4XAVSS

VOSCI C15 — REFCLK0 — REFCLK0 (5)

ROUT A12 R175 0 — ROUT — ROUT (33)
GOUT B13 R166 0 — GOUT — GOUT (33)
BOUT A13 R162 0 — BOUT — BOUT (33)
HSYNC F13 R140 33 — HSYNC — HSYNC (33)
VSYNC E13 R135 33 — VSYNC — VSYNC (33)
VGPIO0 D13 R136 0 — DDC1CLK — DDC1CLK (33)
VGPIO1 D12 — DDC1DATA — DDC1DATA (33)
INT#A B11 — INTA# — INTA# (12,14,18,19)
CSYNC E12 — CSYNC — CSYNC (12)
RSYNC A11 — RSYNC — RSYNC (12)
LSYNC F12 — LSYNC — LSYNC (12)
VCOMP E14 — VCOMP
VRSET D14 — VRSET
VVBWN F14 — VVBWN
DACAVDD1 B12 — DACAVDD1
DACAVSS1 C12 — DACAVSS1
DACAVDD2 C13 — DACAVDD2
DACAVSS2 C14 — DACAVSS2
DCLKAVDD B15 — DCLKAVDD
DCLKAVSS A15 — DCLKAVSS
ECLKAVDD B14 — ECLKAVDD
ECLKAVSS A14 — ECLKAVSS

PCIRST# Y3, PWROK W4, AUXOK W6, D11, E10, A10, P11, C11, E11, P10, TRAP1, TRAP0, TESTMODE2, TESTMODE1, TESTMODE0, DLLEN#, ENTEST

(18,27) PCIRST1# — PCIRST1#
(15,33) PWRGD — PWRGD
(15,31) AUXOK — AUXOK

TRAP1
ENTEST

for 650 only
VCC3
RSYNC R172 4.7K
TRAP1 R161 4.7K
CSYNC R195 4.7K
LSYNC R194 4.7K

ENTEST R157 4.7K
PWRGD C113 X_0.1u

VCC1_8
R177 150 — CB101 X_0.1u
ZVREF
R179 150 — CB102 0.1u

VCC3
L39 80_0603
C109 X_10u-0805 — C106 0.1u
CP22 X_COPPER_0
Z1XAVDD — Z1XAVSS

VCC3
L38 80_0603
C110 X_10u-0805 — C105 0.1u
CP24 X_COPPER_0
Z4XAVDD — Z4XAVSS

VCC1_8
L37 80_0603
C111 10u-0805 — C104 0.1u
CP23 X_COPPER_0
R181 56 — ZCMP_N — VDDZCMP
R180 56 — ZCMP_P — VSSZCMP

DCLKAVDD — L26 80_0603 — VCC3
CB80 0.1u — CP13 X_COPPER_0 — CE4 X_10u-0805
DCLKAVSS — L27 X_80_0603

ECLKAVDD — L28 80_0603 — VCC3
CB81 0.1u — CP15 X_COPPER_0 — CE5 X_10u-0805
ECLKAVSS — L29 X_80_0603

DACAVDD1 — L32 80_0603 — VCC1_8
CB83 0.1u — CP17 X_COPPER_0 — CE6 X_10u-0805
DACAVSS1 — L31 X_80_0603

VVBWN — CB69 0.1u
VCOMP — CB67 0.1u
VRSET — R134 130
DACAVDD2 — L20 80_0603 — VCC1_8
CB71 1u — CP12 X_COPPER_0 — CE3 X_10u-0805
DACAVSS2 — L25 X_80_0603

Micro-Star	Title: MS-6524	Rev 0A
Document Number: SIS 645/650-3		
Last Revision Date: Thursday, October 18, 2001	Sheet 10 of 36	

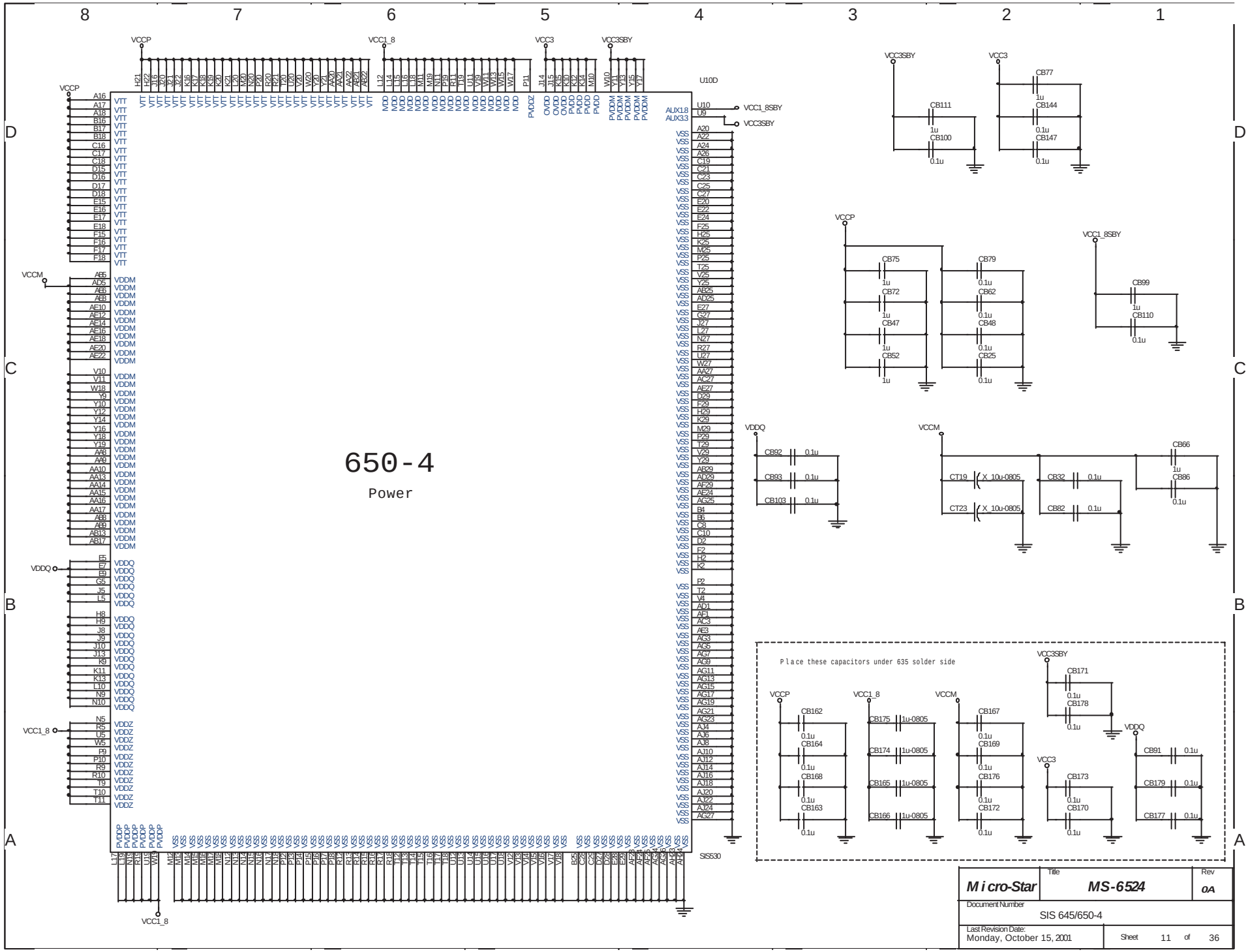

Micro-Star	Title: MS-6524	Rev: 0A
Document Number: SIS 645/650-4		
Last Revision Date: Monday, October 15, 2001	Sheet 11 of 36	

NOTE: This page is for universal PCB design(suitable for both 645 or 650)

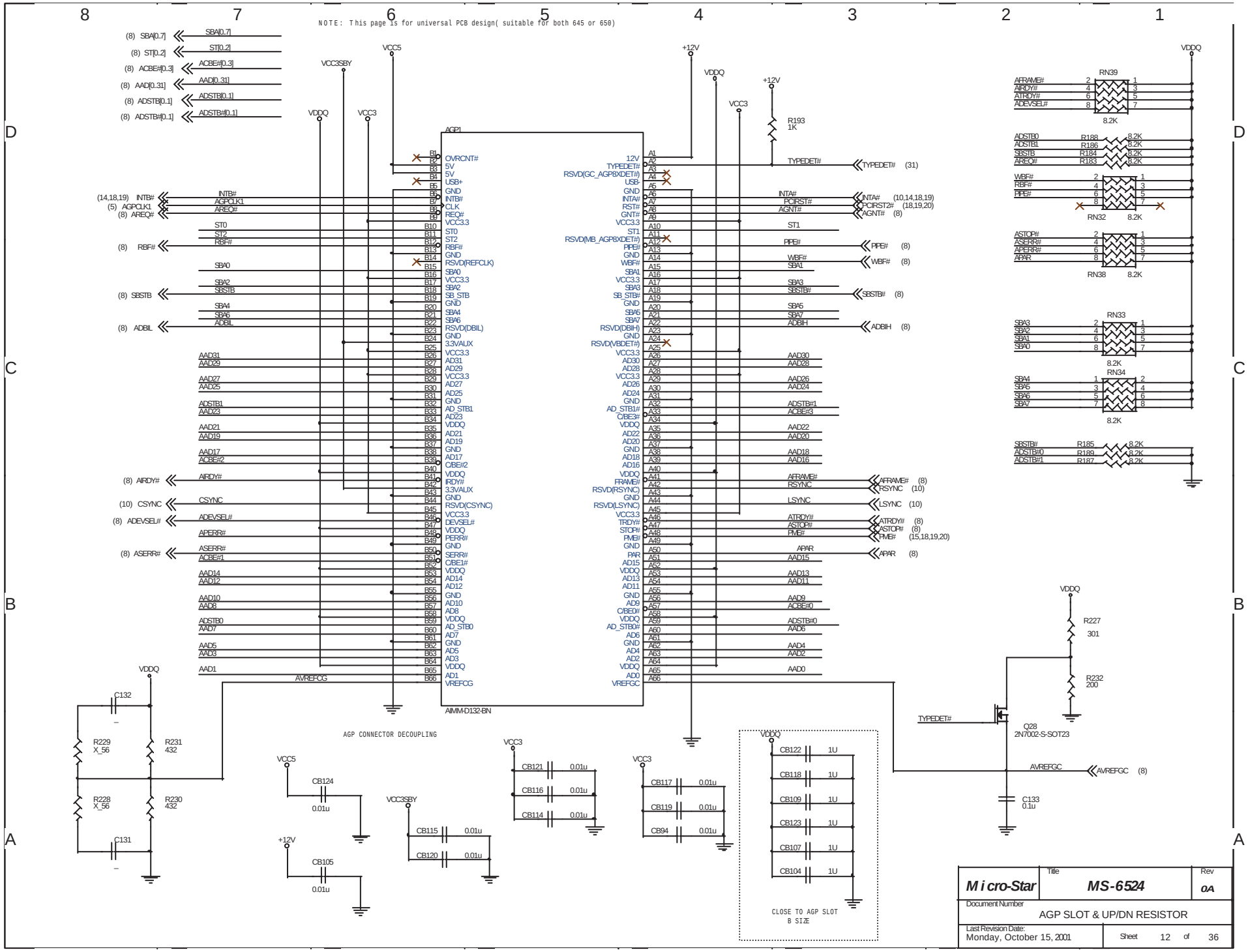

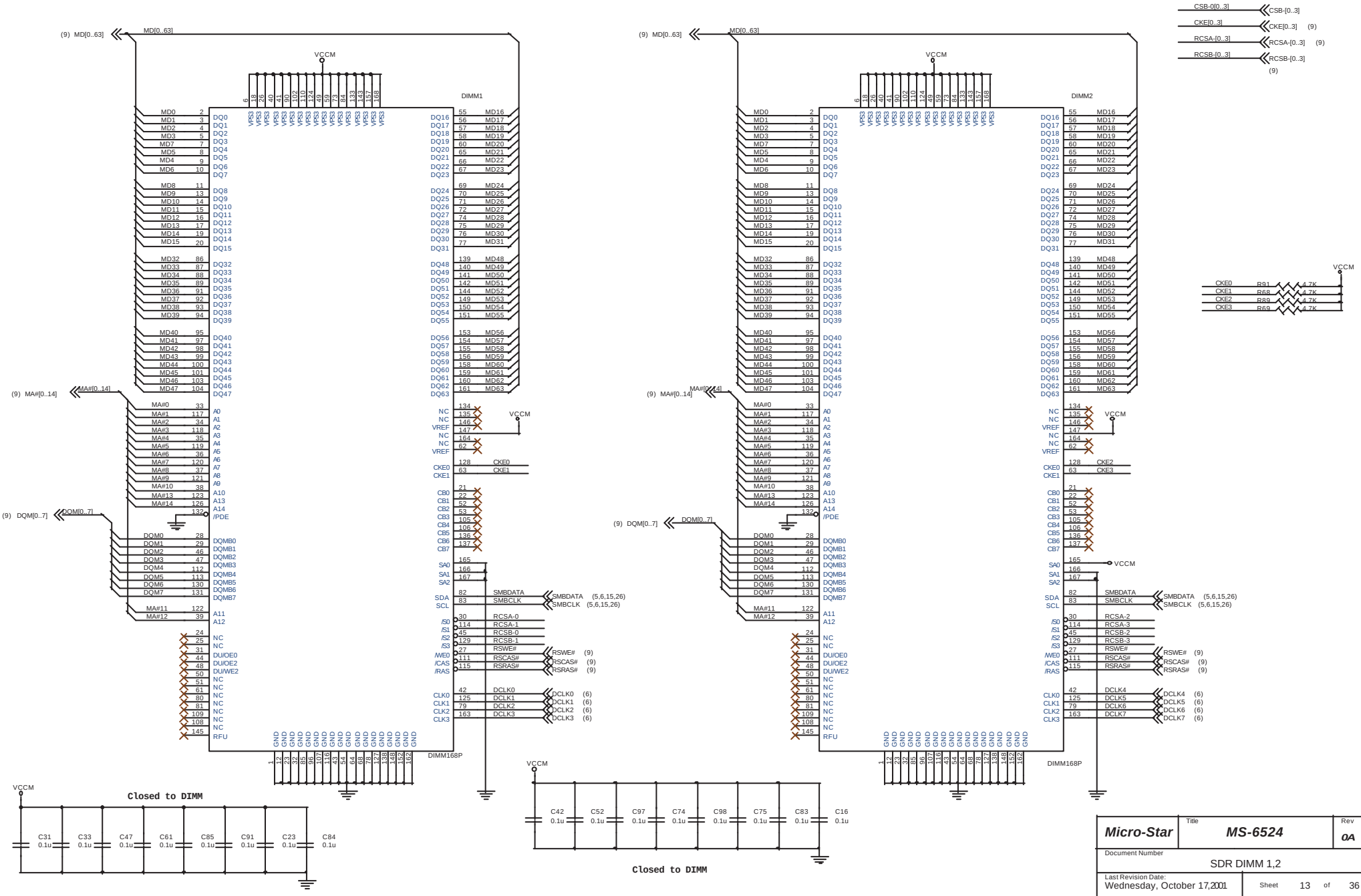
DIMM1
DIMM2
DIMM168P
VCCM
MD[0..63]
MA#[0..14]
DQM[0..7]
CSB-0[0..3]
CSB-[0..3]
CKE[0..3]
RCSA-[0..3]
RCSB-[0..3]
CKE0 R91 4.7K
CKE1 R68 4.7K
CKE2 R89 4.7K
CKE3 R69 4.7K
SMBDATA (5,6,15,26)
SMBCLK (5,6,15,26)
RSWE# (9)
RSCAS# (9)
RSRAS# (9)
DCLK0 (6)
DCLK1 (6)
DCLK2 (6)
DCLK3 (6)
DCLK4 (6)
DCLK5 (6)
DCLK6 (6)
DCLK7 (6)
Closed to DIMM
C31 0.1u
C33 0.1u
C47 0.1u
C61 0.1u
C85 0.1u
C91 0.1u
C23 0.1u
C84 0.1u
C42 0.1u
C52 0.1u
C97 0.1u
C74 0.1u
C98 0.1u
C75 0.1u
C83 0.1u
C16 0.1u
Micro-Star
Title
MS-6524
Rev
0A
Document Number
SDR DIMM 1,2
Last Revision Date:
Wednesday, October 17,2001
Sheet 13 of 36

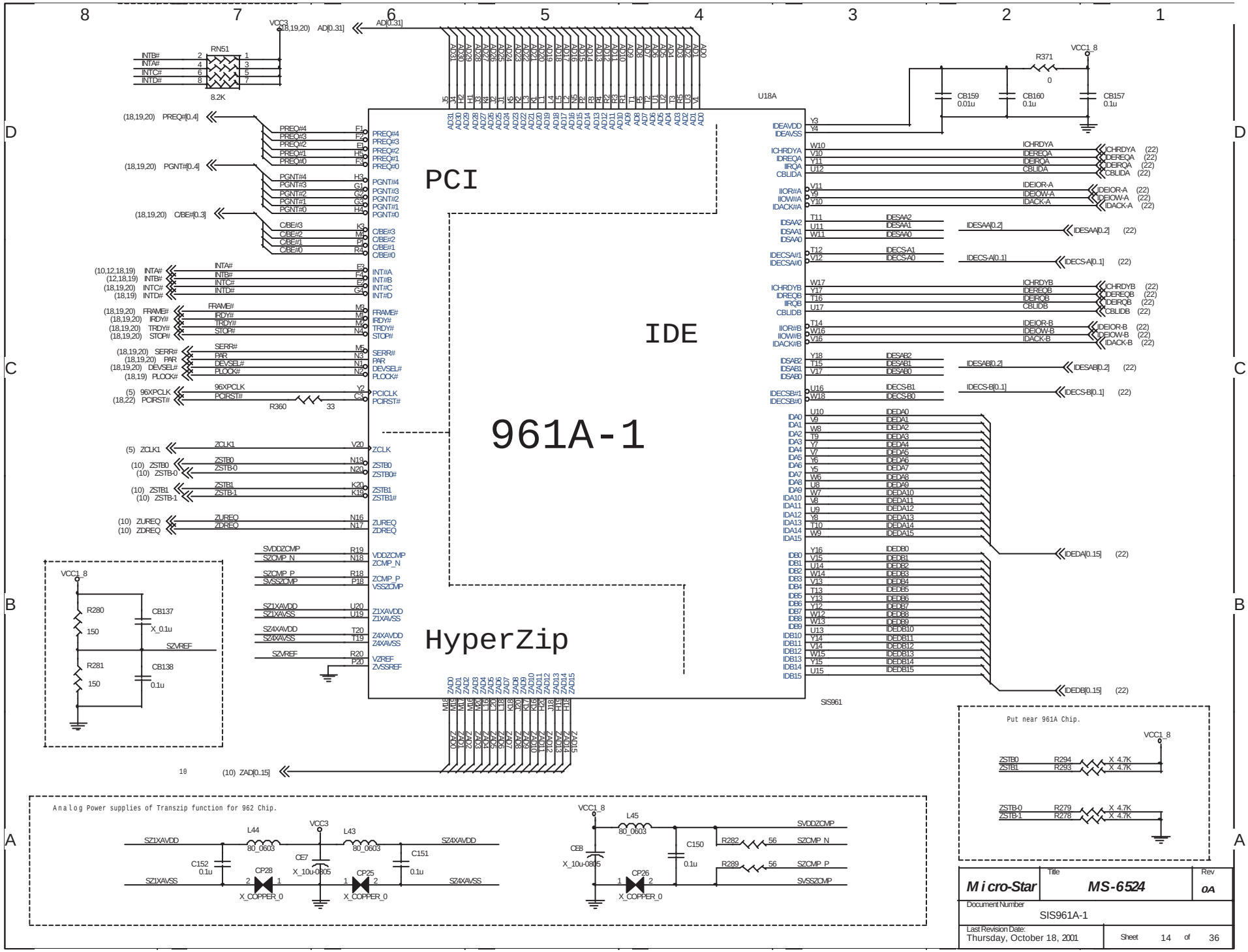
PCI
IDE
961A-1
HyperZip
U18A
SIS961
RN51
8.2K
R360
33
R371
0
CB159
0.01u
CB160
0.1u
CB157
0.1u
R280
150
CB137
X_0.1u
R281
150
CB138
0.1u
SZVREF
Put near 961A Chip.
ZSTB0 R294 X 4.7K
ZSTB1 R293 X 4.7K
ZSTB-0 R279 X 4.7K
ZSTB-1 R278 X 4.7K
Analog Power supplies of Transzip function for 962 Chip.
SZ1XAVDD
SZ1XAVSS
SZ4XAVDD
SZ4XAVSS
L44
80_0603
L43
80_0603
C152
0.1u
CE7
X_10u-0805
C151
0.1u
CP28
X_COPPER_0
CP25
X_COPPER_0
L45
80_0603
CE8
X_10u-0805
C150
0.1u
R282
56
R289
56
SVDDZCMP
SZCMP_N
SZCMP_P
SVSSZCMP
CP26
X_COPPER_0
Micro-Star
MS-6524
0A
Document Number
SIS961A-1
Last Revision Date:
Thursday, October 18, 2001
Sheet 14 of 36

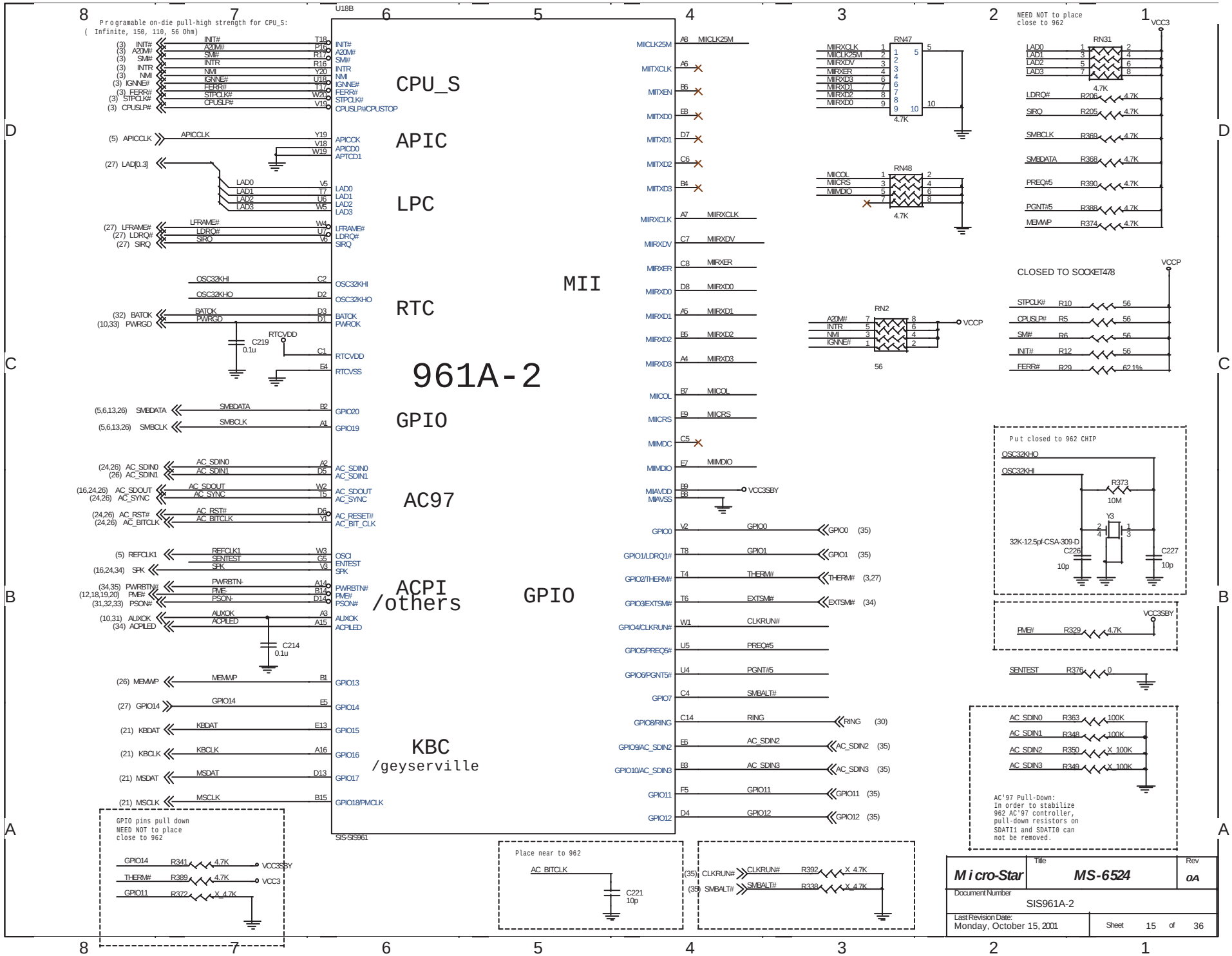
U18B
961A-2
CPU_S
APIC
LPC
RTC
GPIO
AC97
ACPI /others
KBC /geyserville
MII
GPIO
SIS-SIS961
Programable on-die pull-high strength for CPU_S:
(Infinite, 150, 110, 56 Ohm)
NEED NOT to place close to 962
CLOSED TO SOCKET478
Put closed to 962 CHIP
32K-12.5pf-CSA-309-D
AC'97 Pull-Down:
In order to stabilize 962 AC'97 controller, pull-down resistors on SDATI1 and SDATI0 can not be removed.
GPIO pins pull down
NEED NOT to place close to 962
Place near to 962
Micro-Star
MS-6524
0A
Document Number
SIS961A-2
Last Revision Date:
Monday, October 15, 2001
Sheet 15 of 36

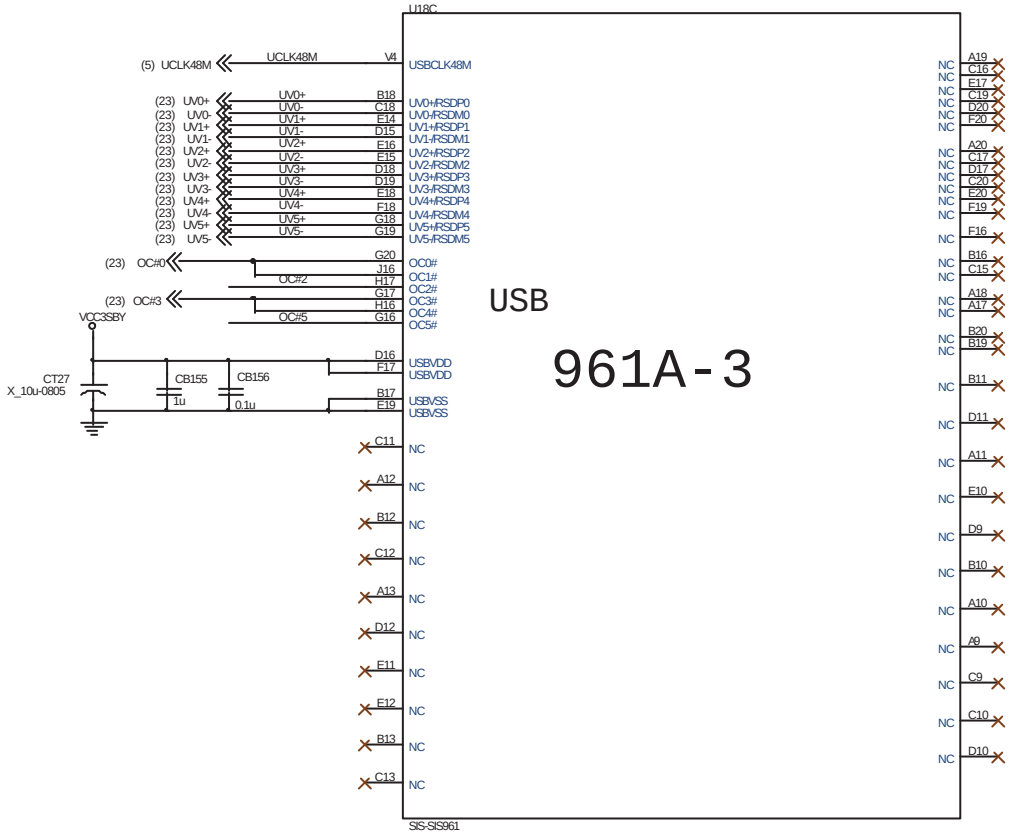

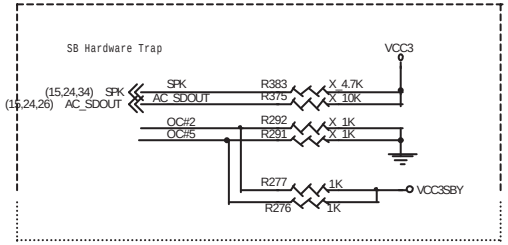

	0	1	Default	embedded pull-low (30~50K Ohm)
SPKR(LPC addr mapping)	disable	enable	0	yes
SDAT0(PCICLK PLL)	enable	disable	0	yes
OC2:(SB debug mode)	enable	disable	1	yes
OC5:(Trap mode)	PCI AD	ROM	1	yes

Micro-Star	Title: MS-6524	Rev: 0A
Document Number: SIS961A-3		
Last Revision Date: Monday, October 15, 2001	Sheet 16 of 36	

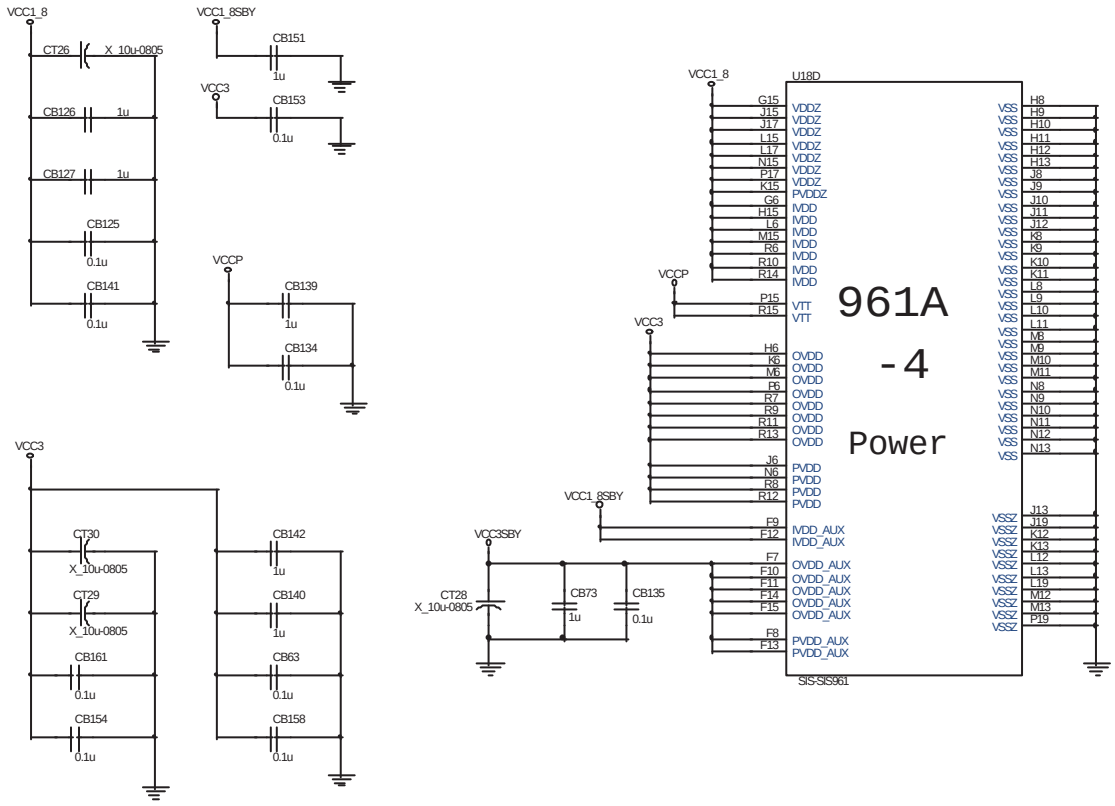

Micro-Star	Title: MS-6524	Rev: 0A
Document Number: SIS961A-4		
Last Revision Date: Monday, October 15, 2001	Sheet 17 of 36	

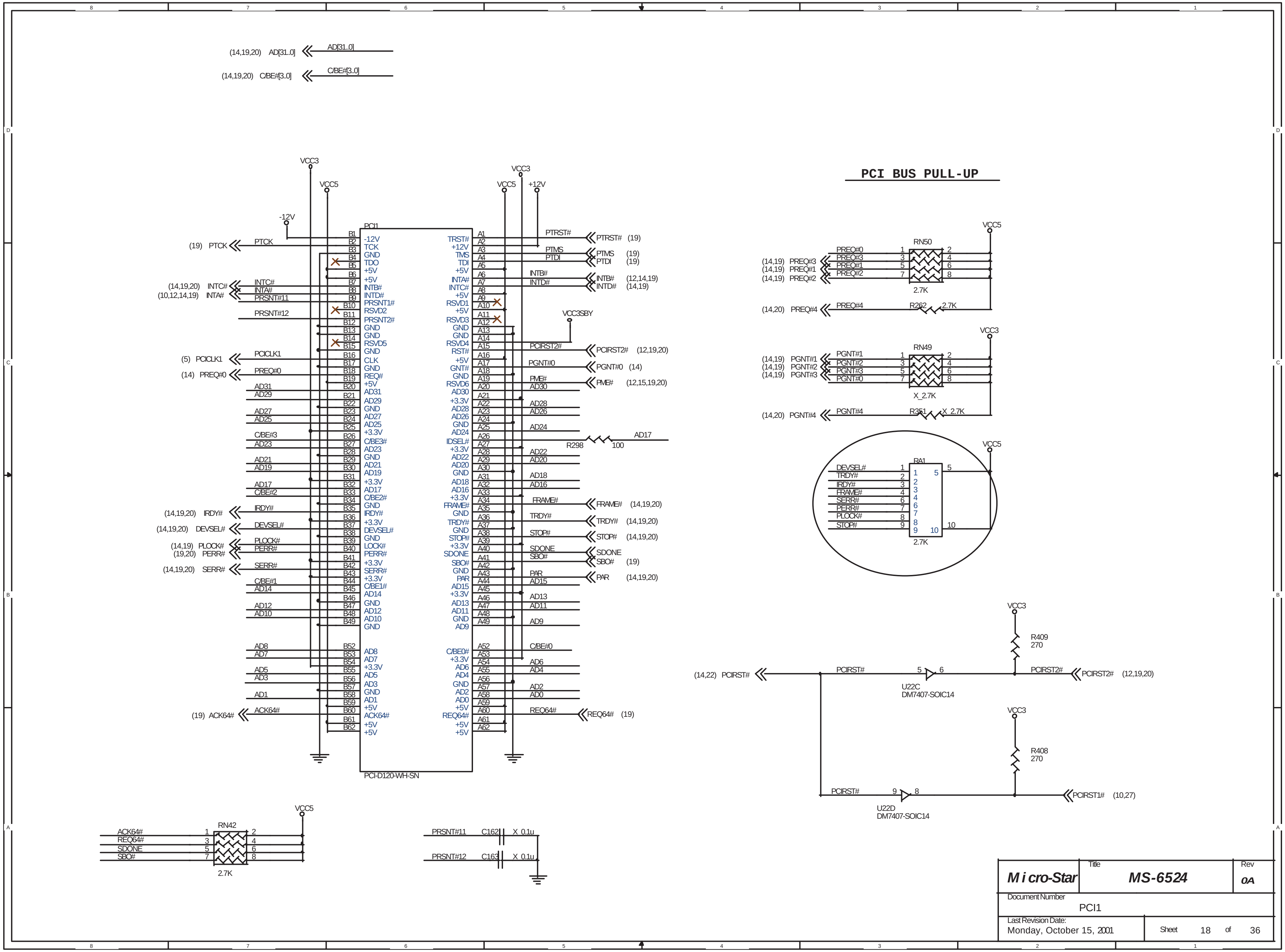

PCI BUS PULL-UP
PCI1
PCI-D120-WH-SN
(14,19,20) AD[31..0]
(14,19,20) C/BE#[3..0]
VCC3
VCC5
+12V
-12V
VCC3SBY
(19) PTCK
(14,19,20) INTC#
(10,12,14,19) INTA#
(5) PCICLK1
(14) PREQ#0
(14,19,20) IRDY#
(14,19,20) DEVSEL#
(14,19) PLOCK#
(19,20) PERR#
(14,19,20) SERR#
(19) ACK64#
PTRST# (19)
PTMS (19)
PTDI (19)
INTB# (12,14,19)
INTD# (14,19)
PCIRST2# (12,19,20)
PGNT#0 (14)
PME# (12,15,19,20)
R298 100
FRAME# (14,19,20)
TRDY# (14,19,20)
STOP# (14,19,20)
SDONE
SBO# (19)
PAR (14,19,20)
REQ64# (19)
RN42 2.7K
C162 X 0.1u
C163 X 0.1u
RN50 2.7K
R262 2.7K
(14,20) PREQ#4
RN49 X_2.7K
R351 X 2.7K
(14,20) PGNT#4
RA1 2.7K
R409 270
R408 270
(14,22) PCIRST#
U22C DM7407-SOIC14
U22D DM7407-SOIC14
PCIRST2# (12,19,20)
PCIRST1# (10,27)
Micro-Star
Title
MS-6524
Rev
0A
Document Number
PCI1
Last Revision Date:
Monday, October 15, 2001
Sheet 18 of 36

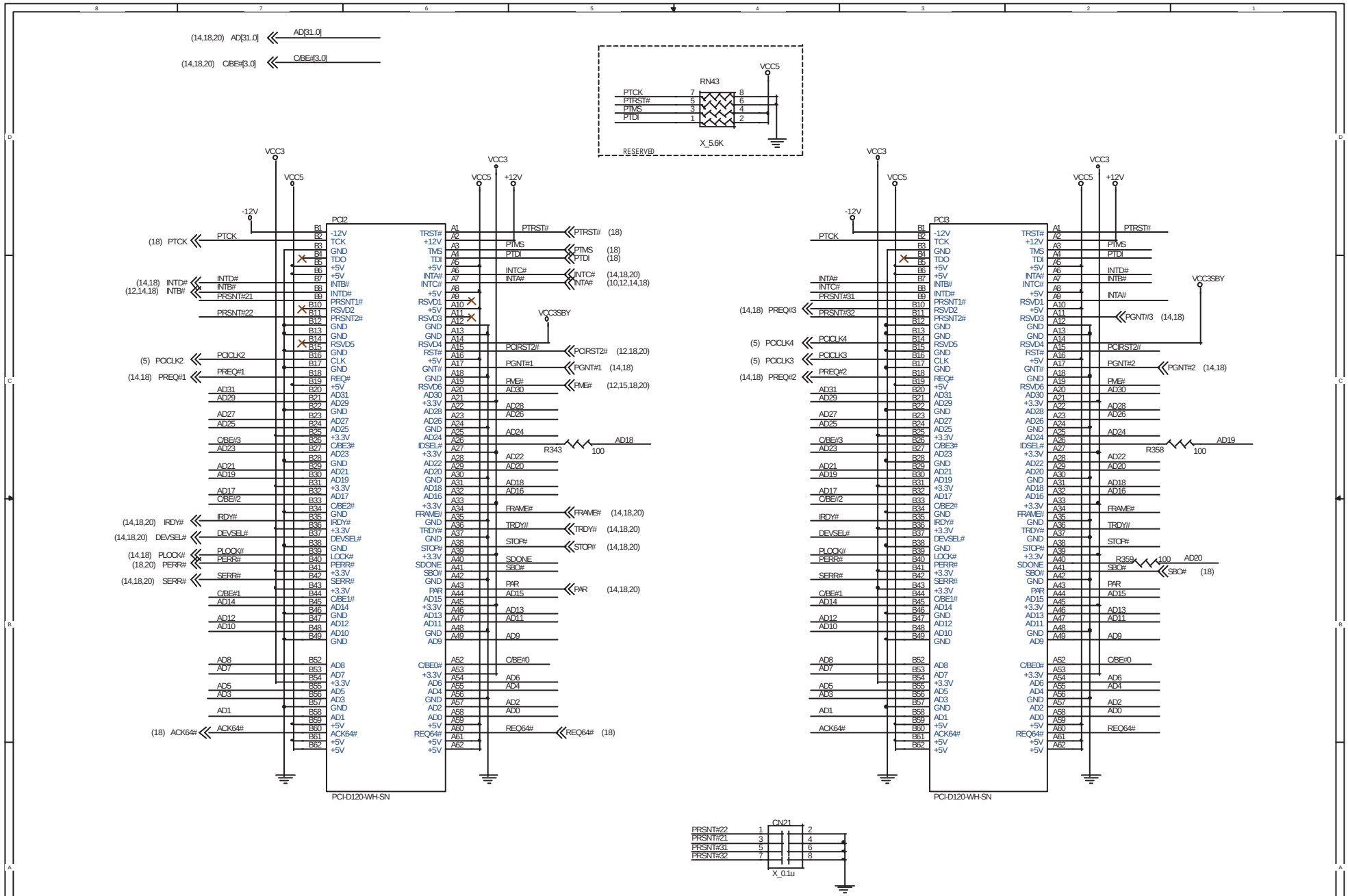

Micro-Star	Title MS-6524	Rev 0A
Document Number PCI2 & PCI3		
Last Revision Date: Monday, October 15, 2001	Sheet 19 of 36	

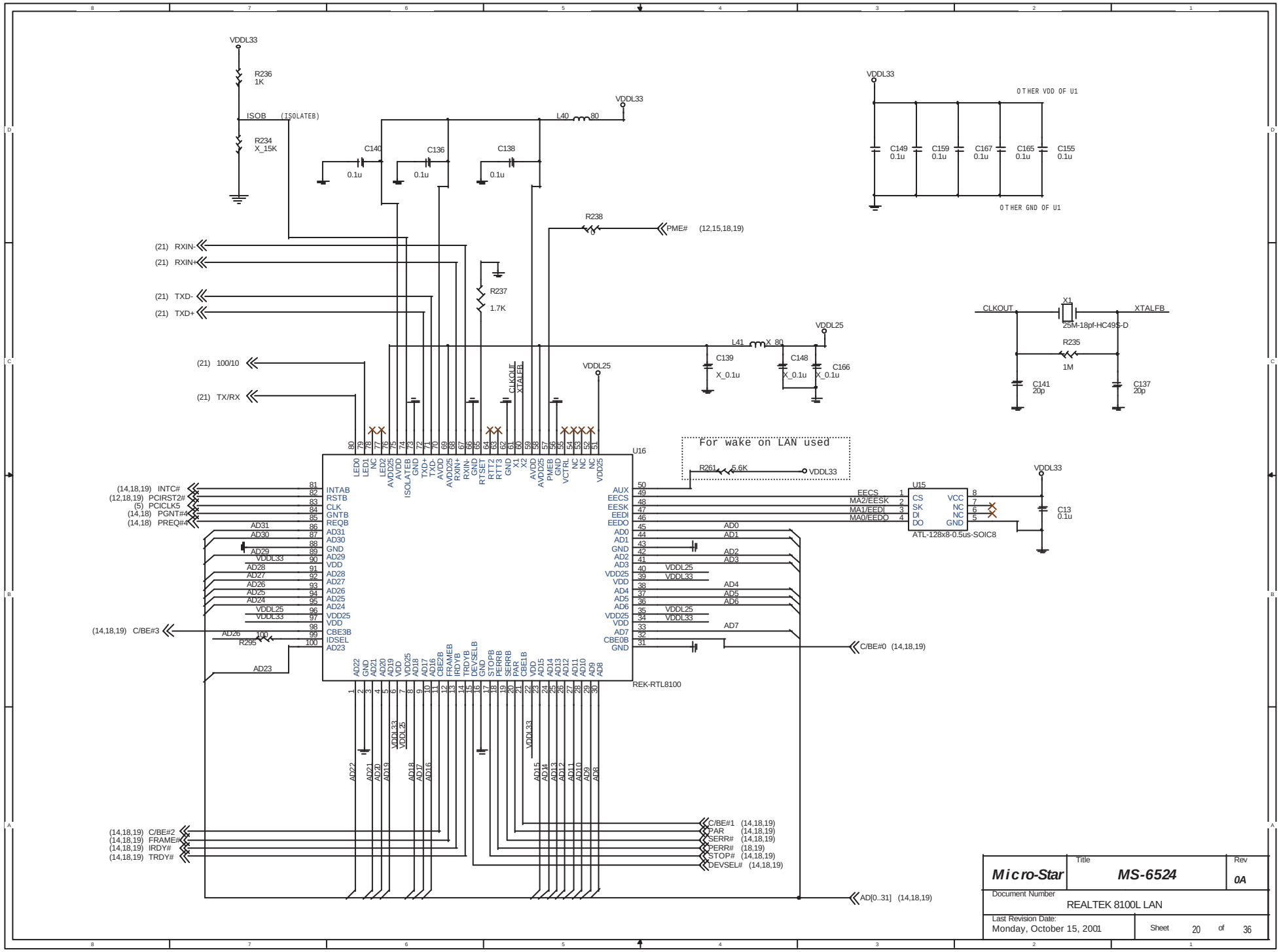

Micro-Star	Title: MS-6524	Rev: 0A
Document Number: REALTEK 8100L LAN		
Last Revision Date: Monday, October 15, 2001	Sheet 20 of 36	

KEYBOARD/MOUSE PORTS

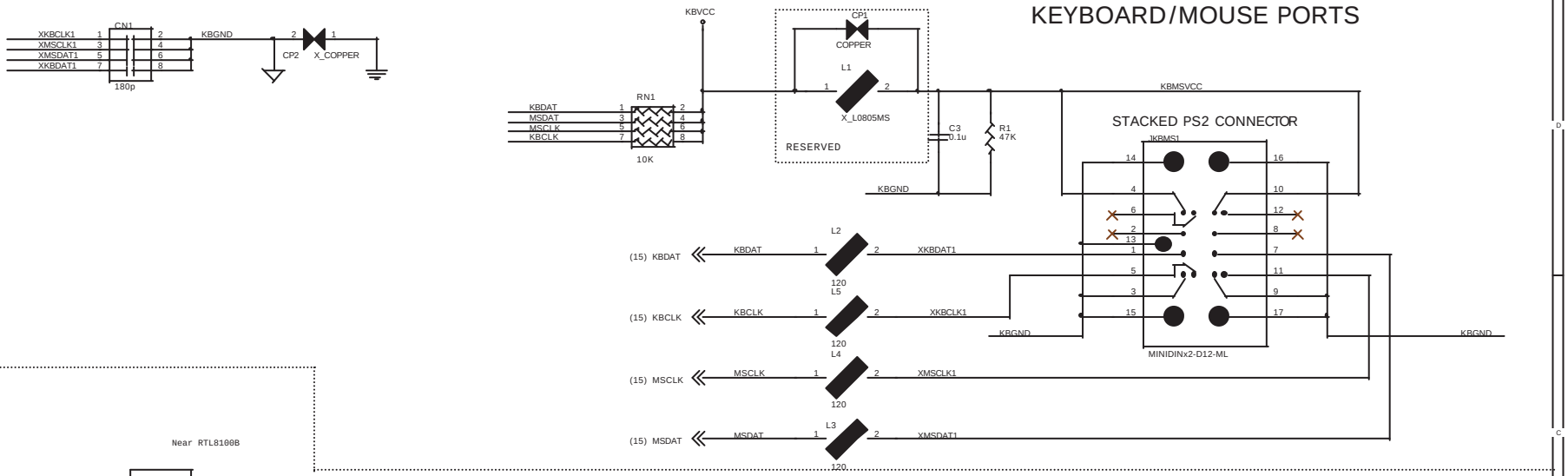

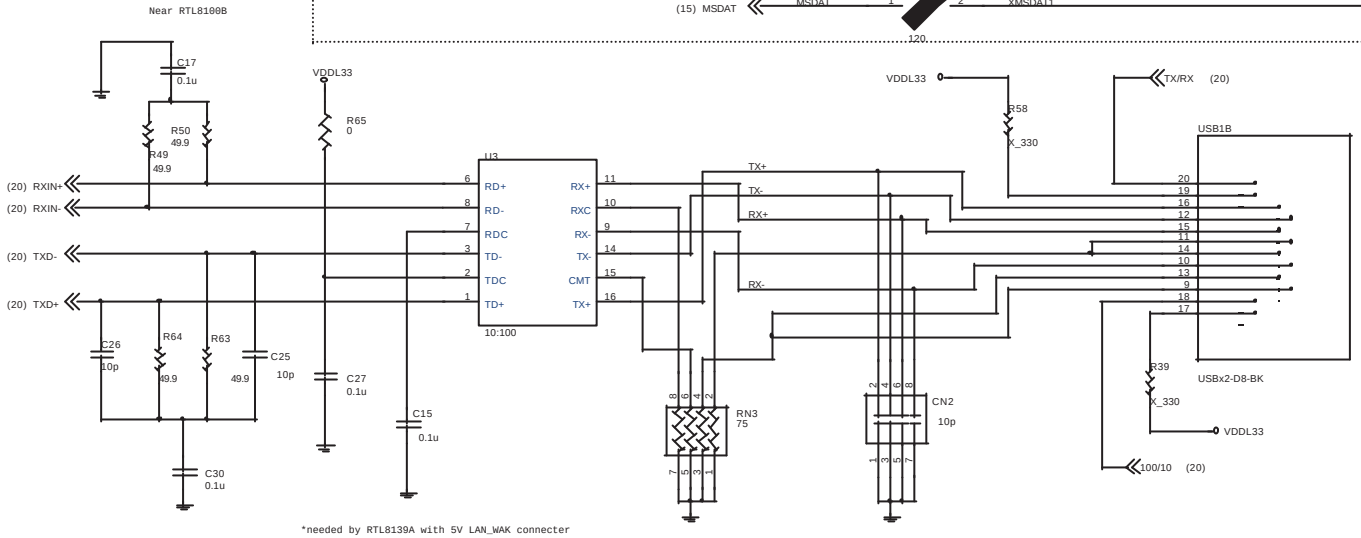

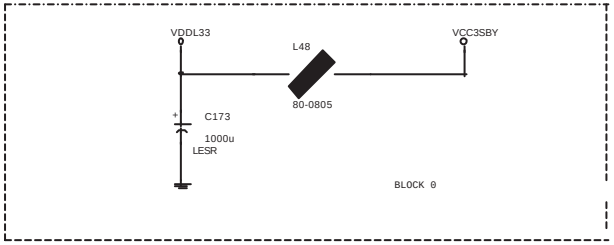

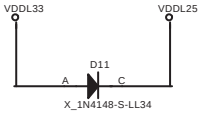

Micro-Star	Title: MS-6524	Rev 0A
Document Number: RJ45 & KB/MS CONNECTOR		
Last Revision Date: Thursday, October 18, 2001	Sheet 21 of 36	

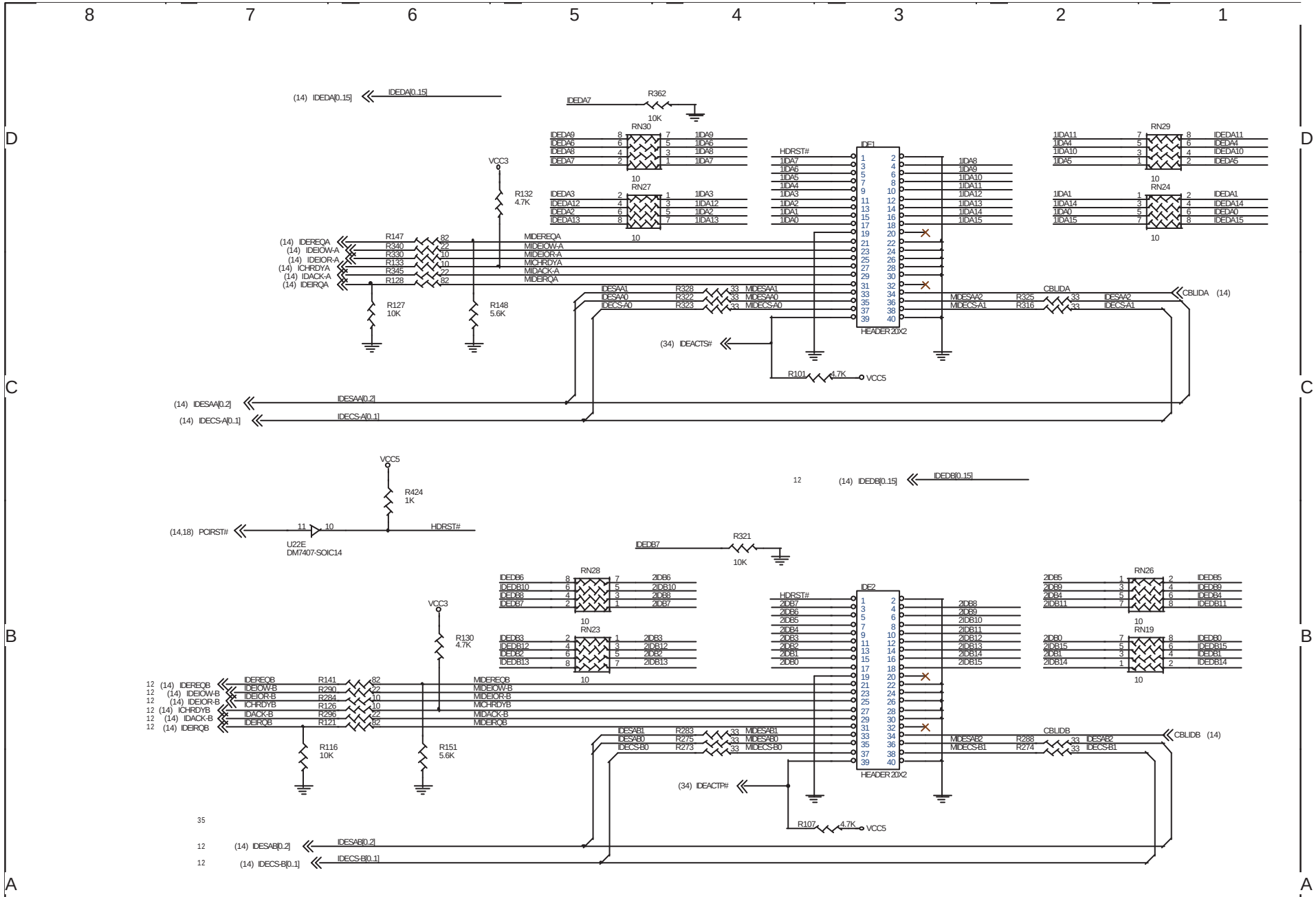

Micro-Star	Title: MS-6524	Rev: 0A
Document Number: IDE CONNECTOR		
Last Revision Date: Monday, October 15, 2001	Sheet 22 of 36	

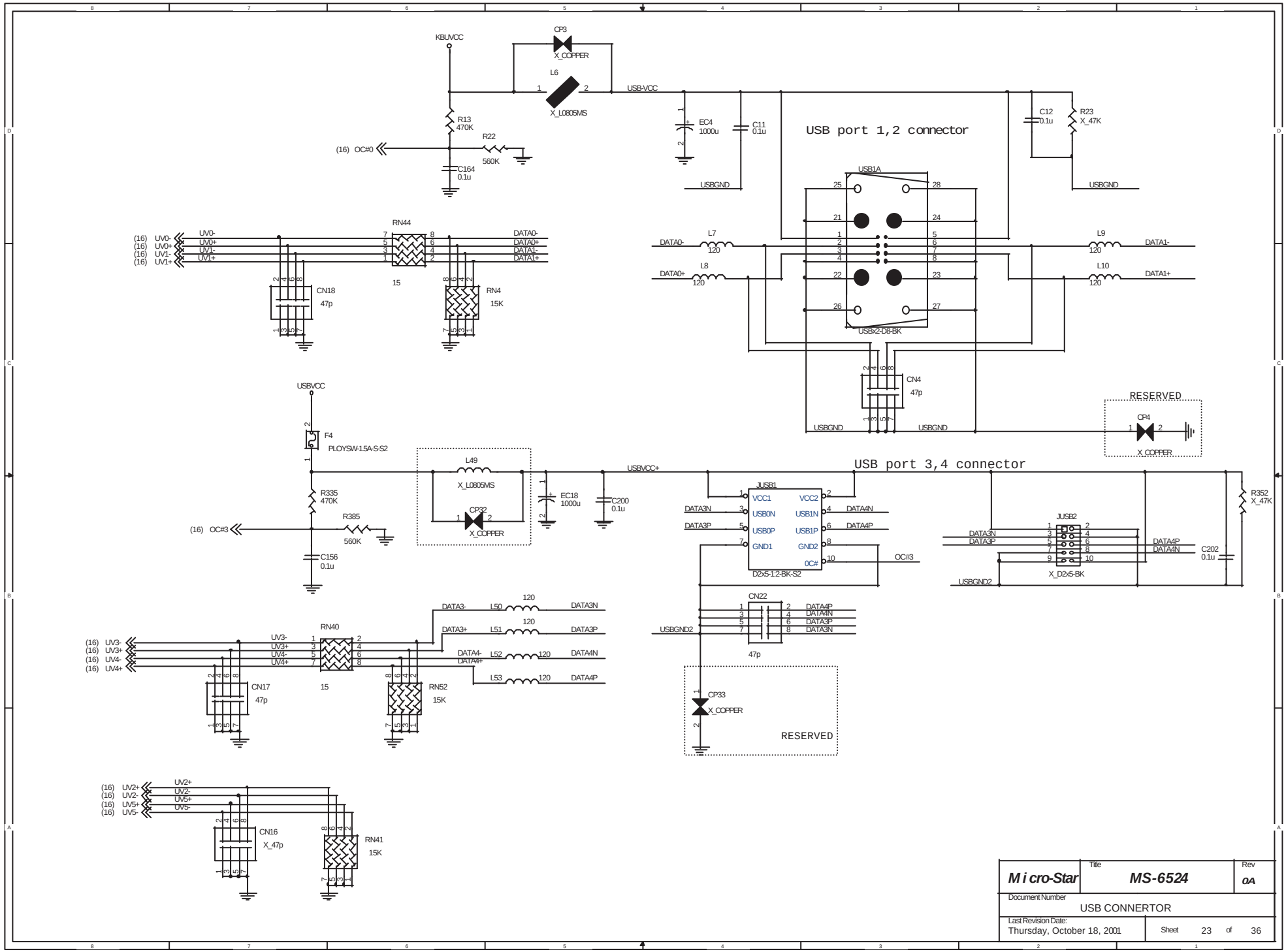

Micro-Star	Title: MS-6524	Rev: 0A
Document Number: USB CONNERTOR		
Last Revision Date: Thursday, October 18, 2001	Sheet 23 of 36	

Codec pin	200	201/202	972	9756
29	1000p	1000p	270p	820p
30	1000p	1000p	270p	820p
31	1u	1u	x	1u
32	1u	1u	0.1u+10u	1u
33	1u	x	x	0.047u
34	x	x	x	
2		202->R		
46		201->x		

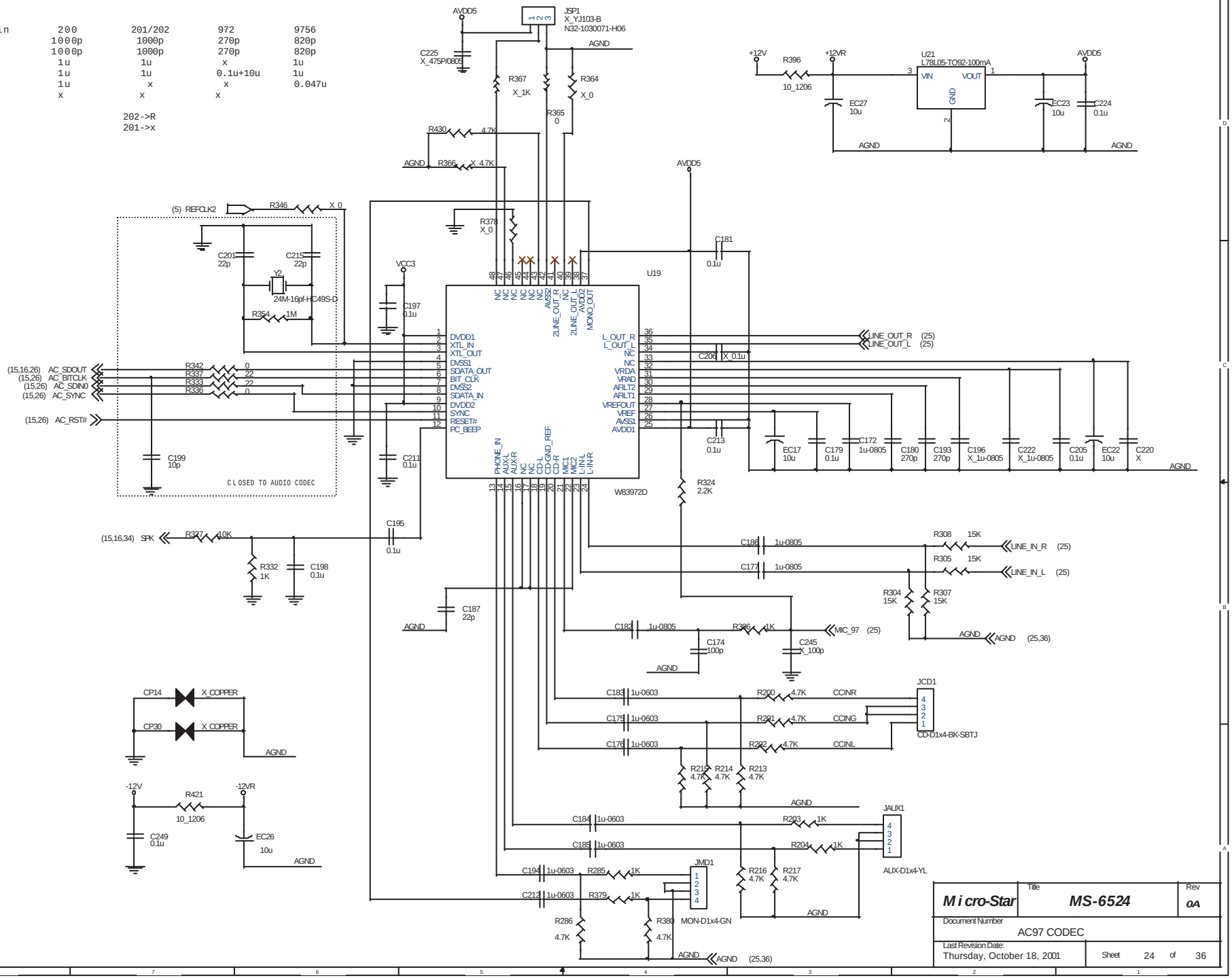

Micro-Star	Title: MS-6524	Rev: 0A
Document Number: AC97 CODEC		
Last Revision Date: Thursday, October 18, 2001	Sheet 24 of 36	

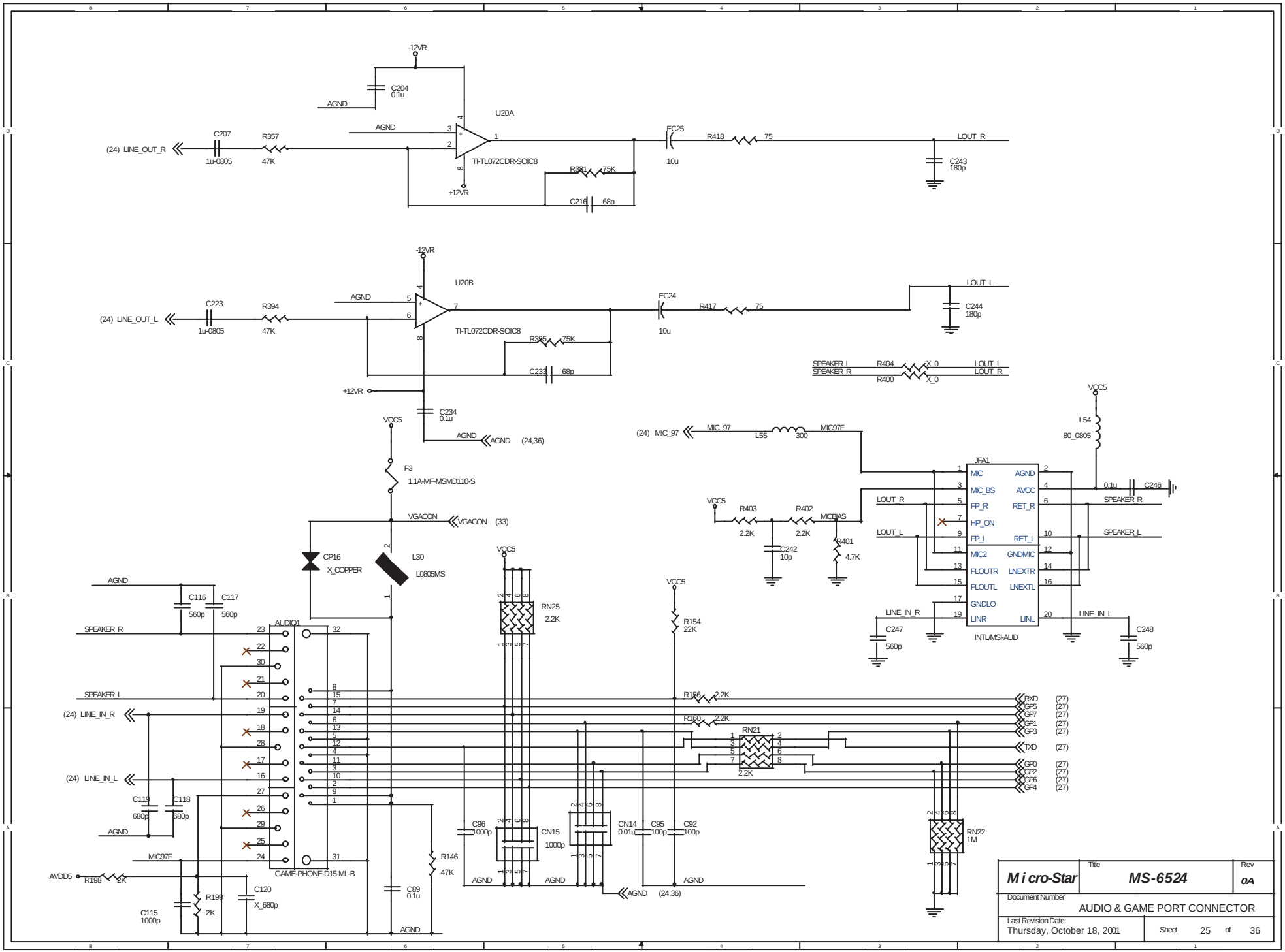
-12VR
C204
0.1u
AGND
U20A
(24) LINE_OUT_R
C207
1u-0805
R357
47K
TI-TL072CDR-SOIC8
+12VR
R381
75K
C216
68p
EC25
10u
R418
75
LOUT_R
C243
180p
U20B
(24) LINE_OUT_L
C223
1u-0805
R394
47K
TI-TL072CDR-SOIC8
R385
75K
C233
68p
EC24
10u
R417
75
LOUT_L
C244
180p
SPEAKER L
SPEAKER R
R404
R400
X_0
C234
0.1u
(24,36)
VCC5
F3
1.1A-MF-MSMD110-S
VGACON
(33)
CP16
X_COPPER
L30
L0805MS
(24) MIC_97
MIC_97
L55
300
MIC97F
L54
80_0805
JFA1
MIC
AGND
MIC_BS
AVCC
FP_R
RET_R
HP_ON
FP_L
RET_L
MIC2
GNDMIC
FLOUTR
LINEXTR
FLOUTL
LINEXTL
GNDLO
LINR
LINL
INTL/MSI-AUD
R403
R402
2.2K
MICBIAS
C242
10p
R401
4.7K
C246
SPEAKER R
SPEAKER L
LINE_IN_R
LINE_IN_L
C247
560p
C248
560p
C116
C117
560p
AUDIO1
GAME-PHONE-D15-ML-B
RN25
2.2K
R154
22K
R156
2.2K
R160
2.2K
RN21
RXD
GP5
GP7
GP1
GP3
TXD
GP0
GP2
GP6
GP4
(27)
C119
C118
680p
MIC97F
AVDD5
R198
2K
R199
2K
C120
X_680p
C115
1000p
R146
47K
C89
0.1u
C96
1000p
CN15
1000p
CN14
0.01u
C95
100p
C92
100p
RN22
1M
Micro-Star
Title
MS-6524
Rev
0A
Document Number
AUDIO & GAME PORT CONNECTOR
Last Revision Date:
Thursday, October 18, 2001
Sheet 25 of 36

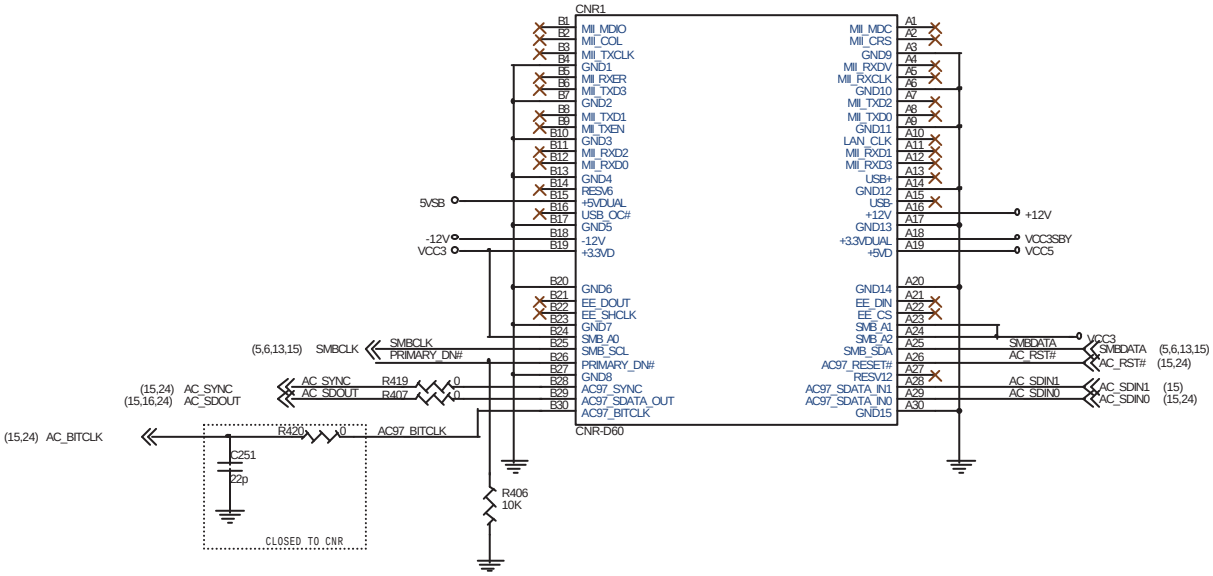

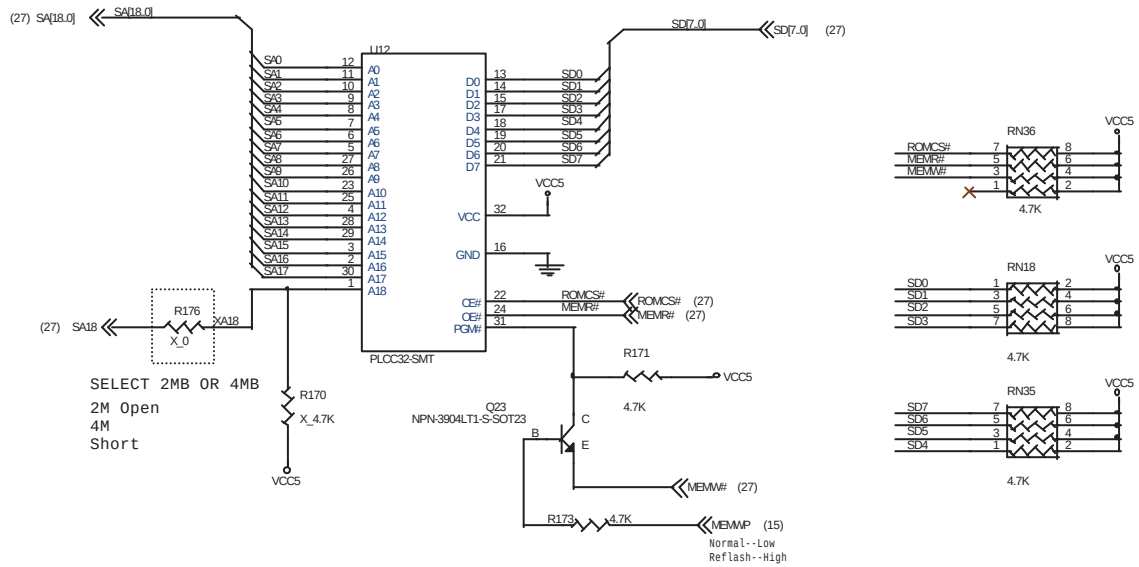

MICRO-STAR INT'L CO.,LTD.

Title: CNR CONNECTOR

Size: Custom | Document Number: MS-6558 | Rev: 0A

Date: Monday, October 15, 2001 | Sheet 26 of 36

Micro-Star | Title: MS-6524 | Rev: 0A

Document Number: CNR SLOT & FLASH MEMORY

Last Revision Date: Monday, October 15, 2001 | Sheet 26 of 36

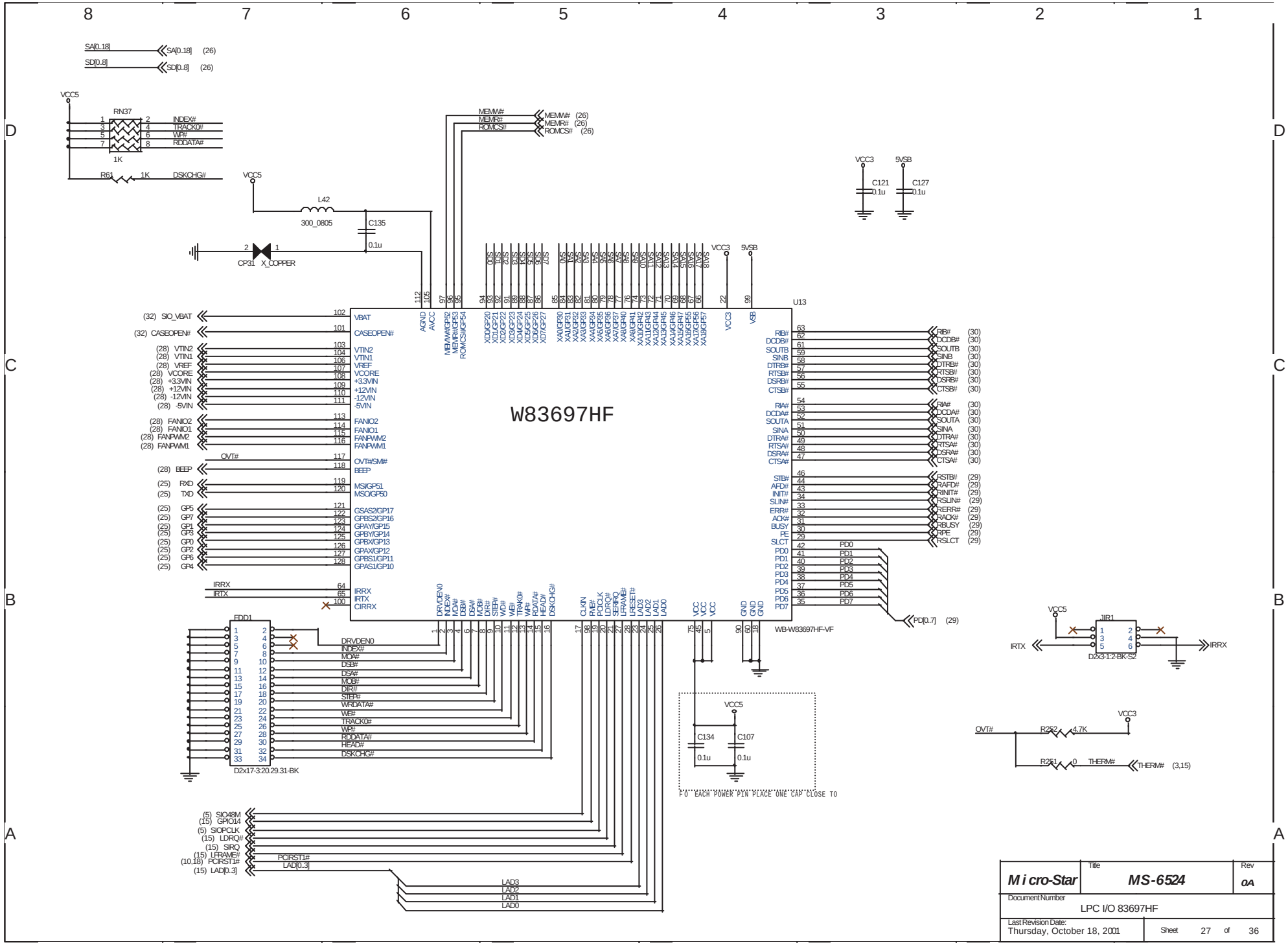
W83697HF
U13
WB-W83697HF-VF
SA[0.18]
SD[0.8]
RN37
1K
R61
DSKCHG#
INDEX#
TRACK0#
WP#
RDDATA#
MEMW#
MEMR#
ROMCS#
L42
300_0805
C135
0.1u
CP31
X_COPPER
VCC5
VCC3
5VSB
C121
C127
FDD1
D2x17-3:20.29.31-BK
JIR1
D2x3-1:2-BK-S2
IRTX
IRRX
OVT#
R252
4.7K
R251
THERM#
C134
C107
PD[0.7]
LAD[0.3]
PCIRST1#
SIO48M
GPIO14
SIOPCLK
LDRQ#
SIRQ
LFRAME#
LAD3
LAD2
LAD1
LAD0
PO EACH POWER PIN PLACE ONE CAP CLOSE TO
Micro-Star
MS-6524
0A
Document Number
LPC I/O 83697HF
Last Revision Date:
Thursday, October 18, 2001
Sheet 27 of 36

Hardware Monitor

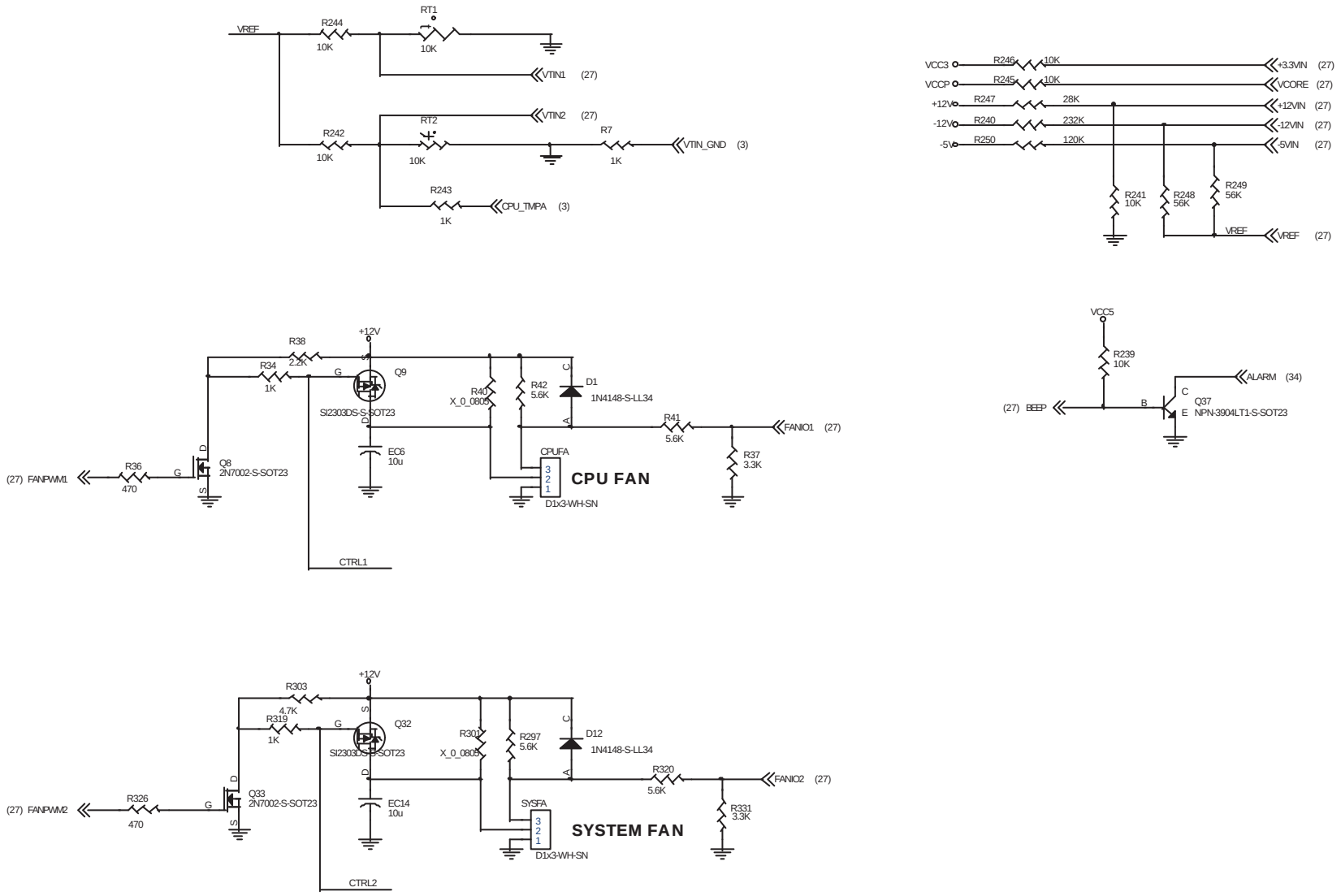

Micro-Star	Title MS-6524	Rev 0A
Document Number HARDWARE MONITOR		
Last Revision Date: Monday, October 15, 2001	Sheet 28 of 36	

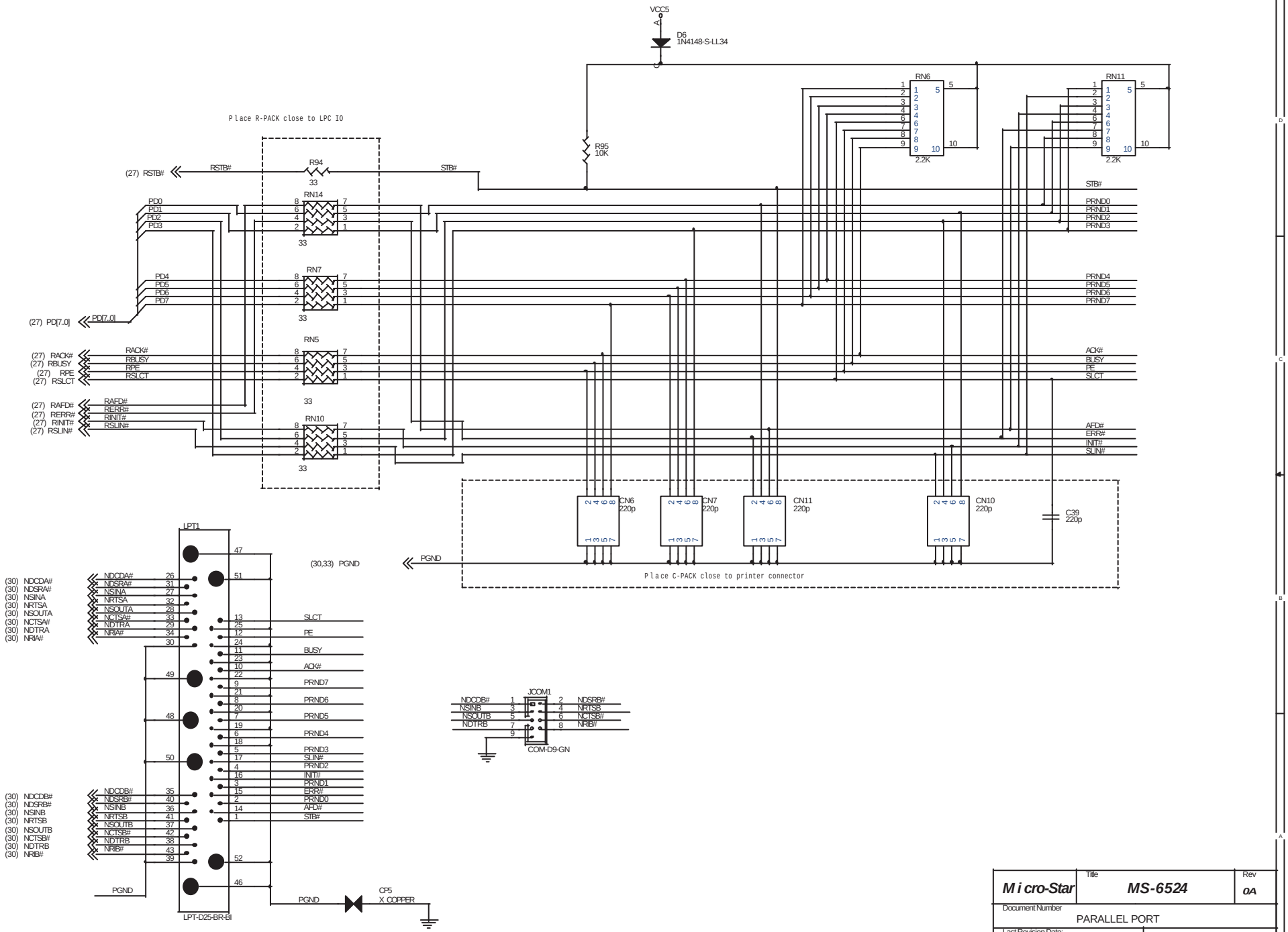

Micro-Star	Title: MS-6524	Rev: 0A
Document Number: PARALLEL PORT		
Last Revision Date: Thursday, October 18, 2001	Sheet 29 of 36	

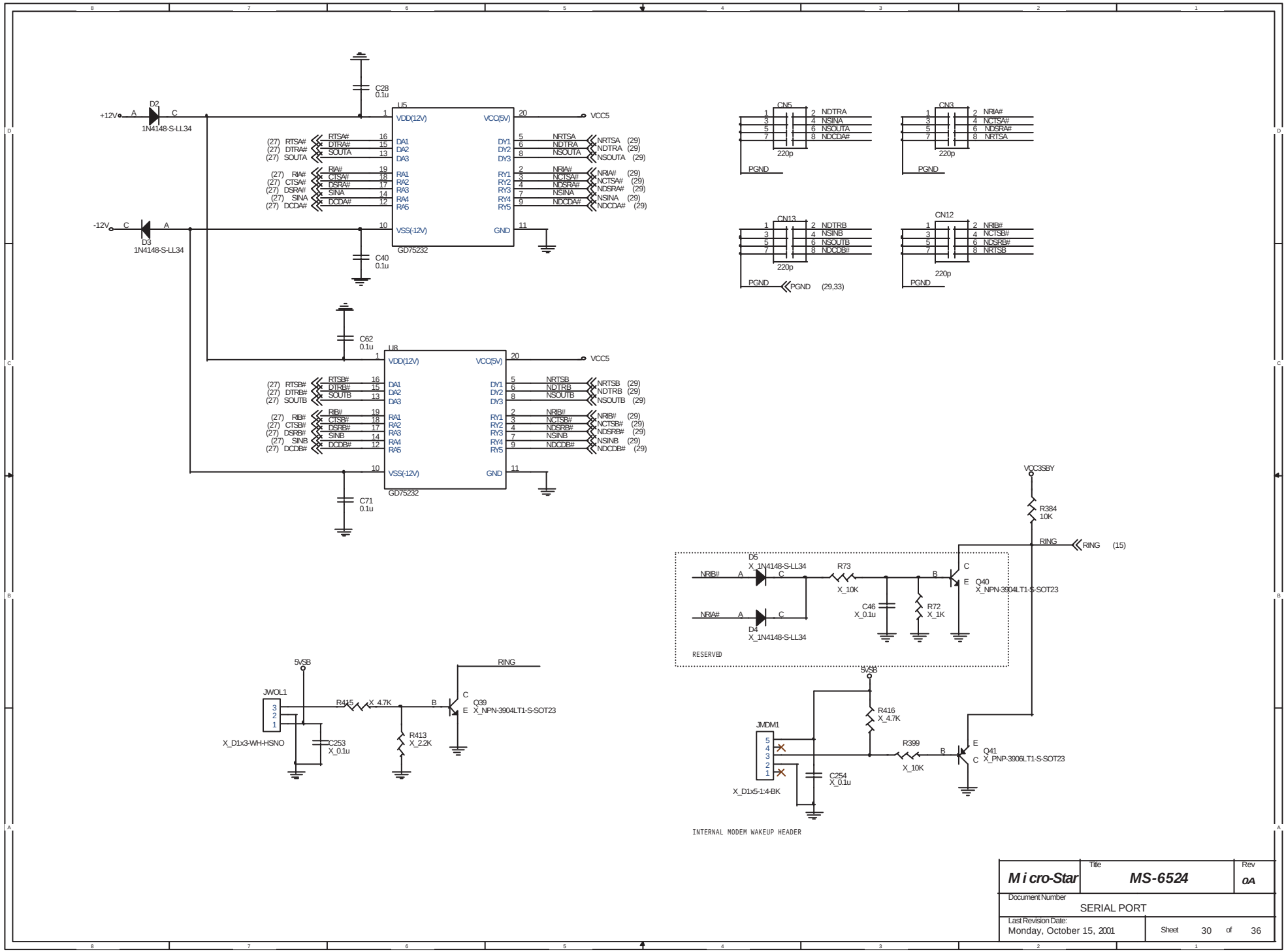

Micro-Star	Title: MS-6524	Rev: 0A
Document Number: SERIAL PORT		
Last Revision Date: Monday, October 15, 2001	Sheet 30 of 36	

1.8V STANDBY POWER TRANSLATOR

(30mils trace / 15 mils space)

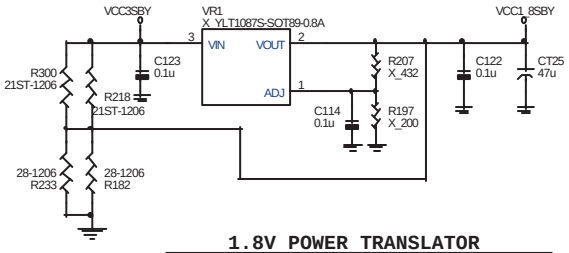

1.8V POWER TRANSLATOR

(50mils trace / 15 mils space)

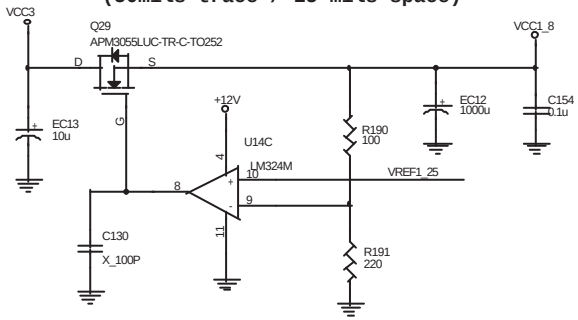

AGP 4X SLOT 1.5V or 3.3V POWER TRANSLATOR

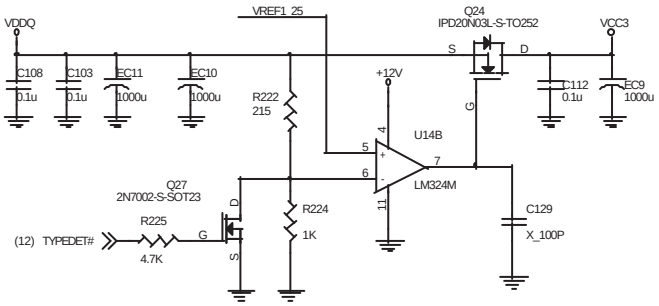

AUX_OK BLOCK

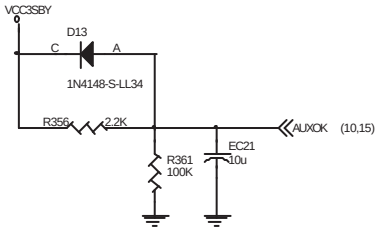

POWER TRANSLATOR

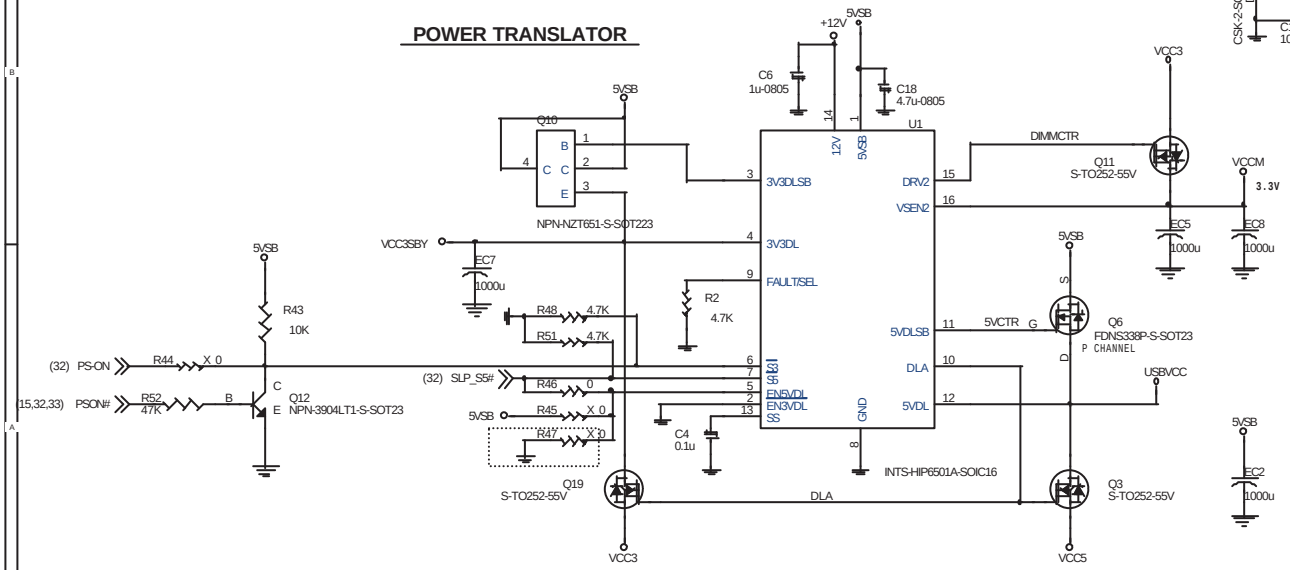

VCC_VID / VID_GOOD

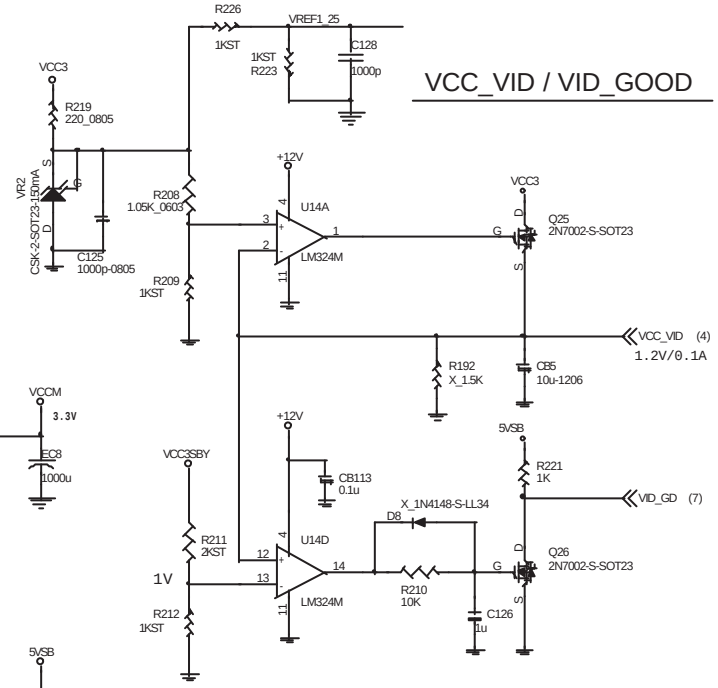

Micro-Star	Title: MS-6524	Rev: 0A
Document Number: VOLTAGE REGULATOR 1		
Last Revision Date: Monday, October 15, 2001	Sheet 31 of 36	

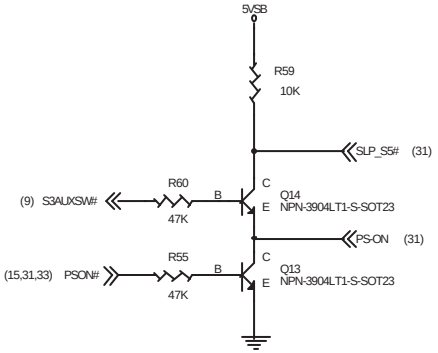

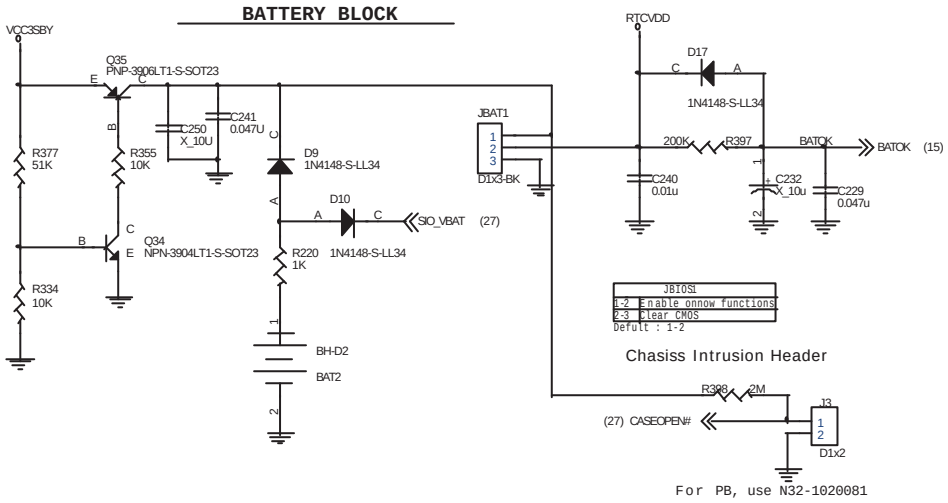

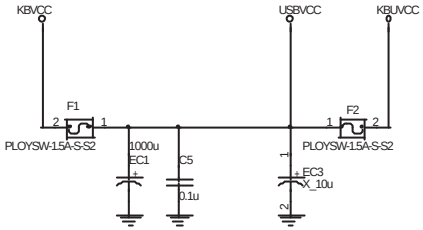

Micro-Star	Title: MS-6524	Rev: 0A
Document Number: VOLTAGE REGULATOR 2		
Last Revision Date: Monday, October 15, 2001	Sheet 32 of 36	

ATX CONNECTOR

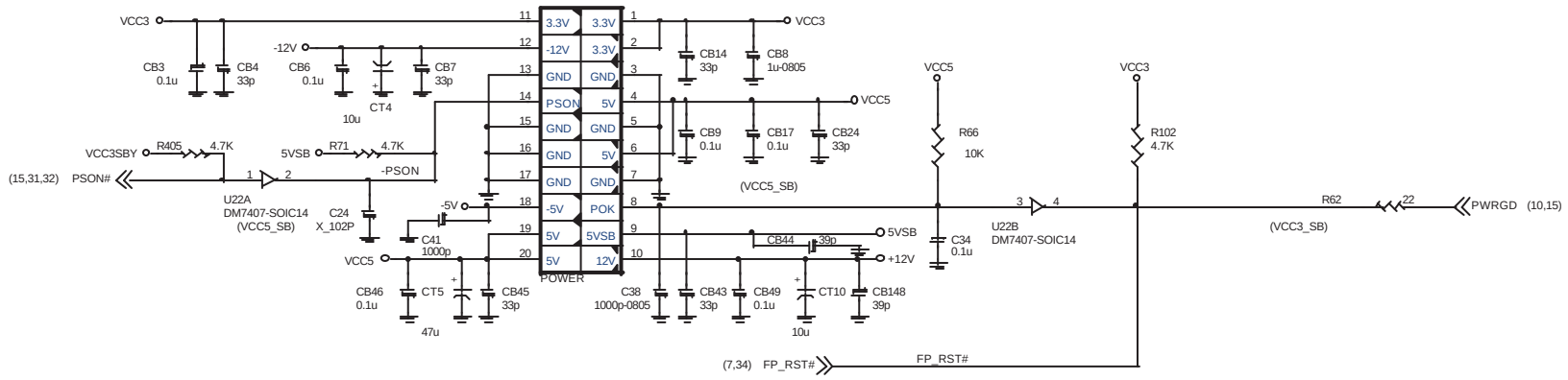

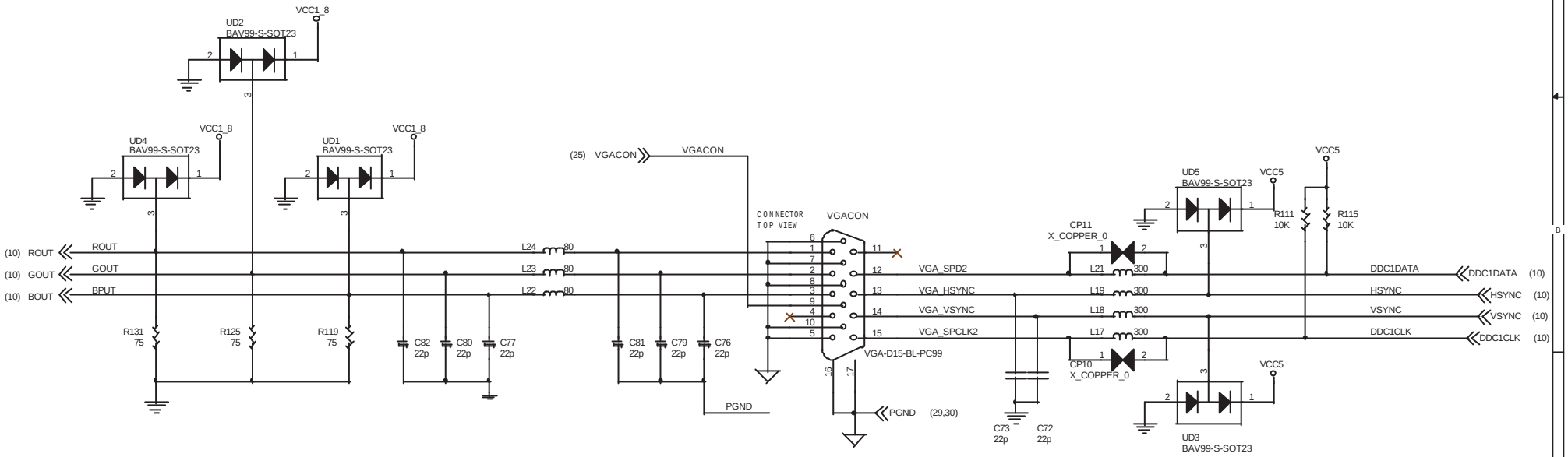

VGA CONNECTOR

Micro-Star	Title: MS-6524	Rev: 0A
Document Number: ATX POWER VGA CONNECTOR		
Last Revision Date: Thursday, October 18, 2001	Sheet 33 of 36	

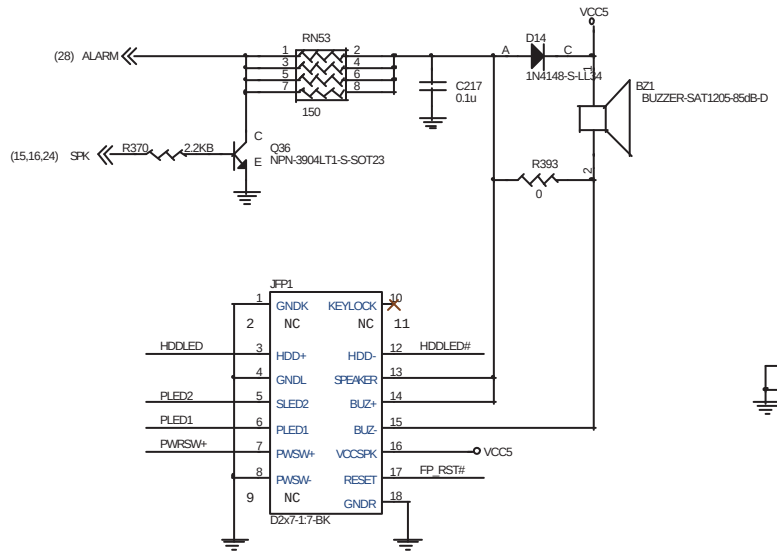

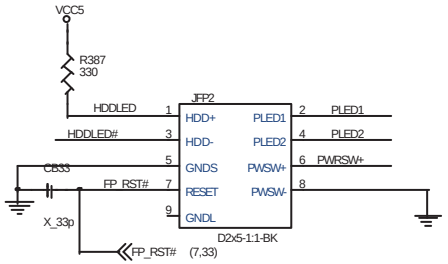

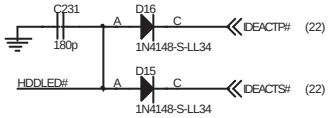

Dual Color LED Block

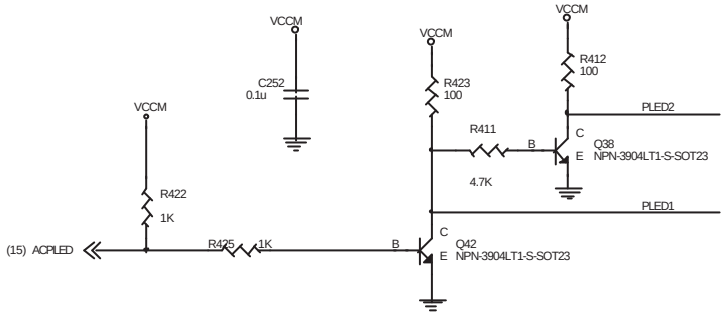

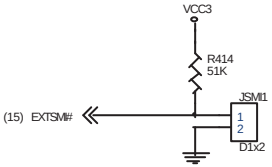

Micro-Star	Title: MS-6524	Rev: 0A
Document Number: FRONT PANEL		
Last Revision Date: Monday, October 15, 2001	Sheet 34 of 36	

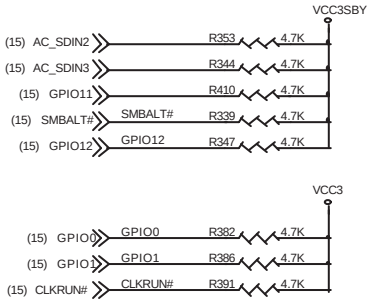

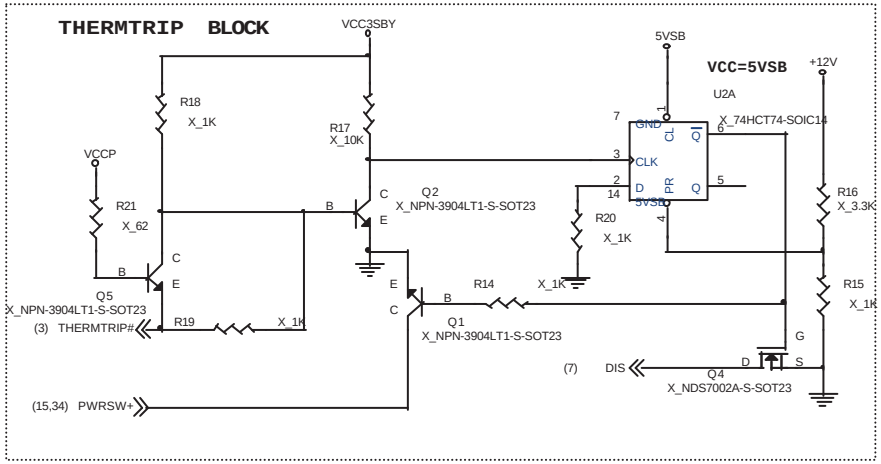

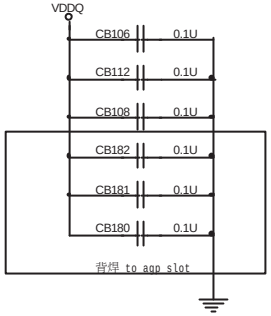

Micro-Star	Title: MS-6524	Rev: 0A
Document Number: THERMTRIP CIRCUIT		
Last Revision Date: Monday, October 15, 2001	Sheet 35 of 36	

PCB OTHER COMPONENT

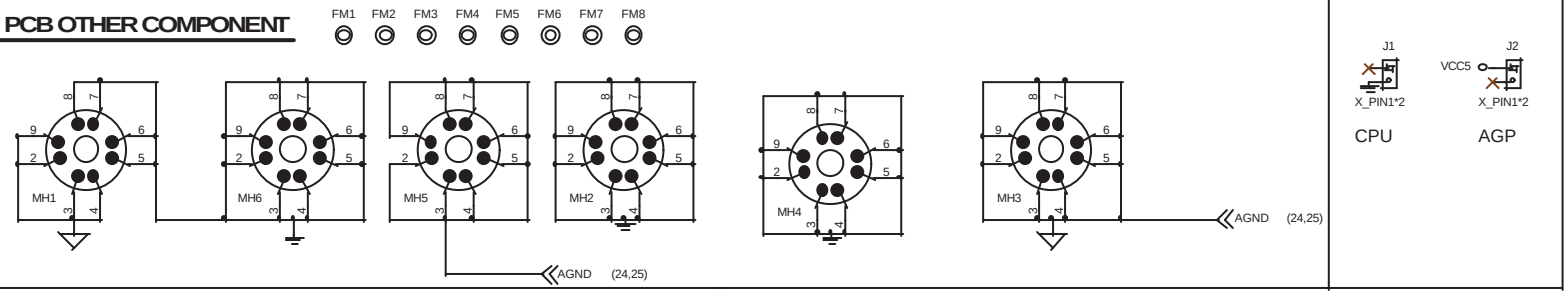

System Decoupling Capacitors

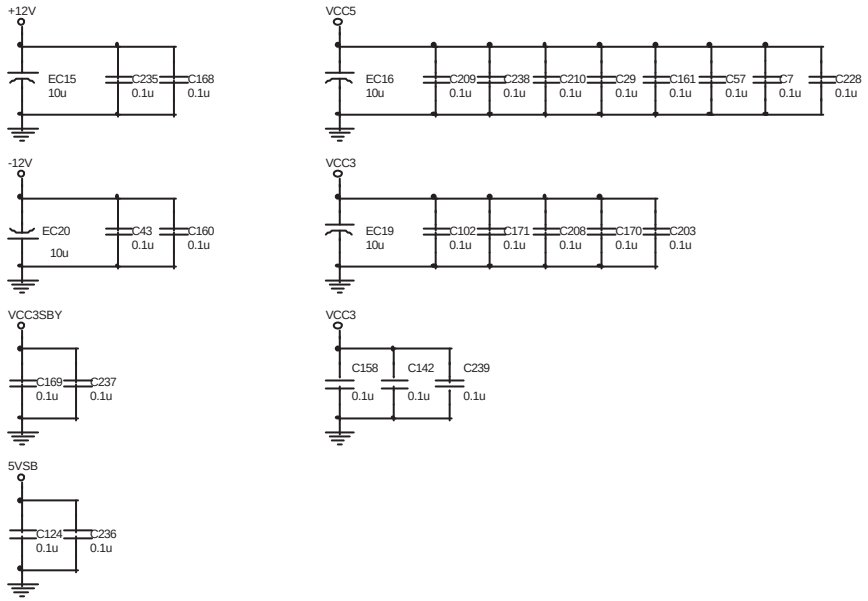

High Freq. return current decoupling

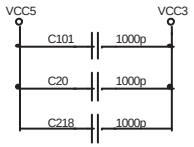

Micro-Star	Title: MS-6524	Rev: 0A
Document Number: DECOUPLING CAPACITOR & PCBOTHER		
Last Revision Date: Friday, October 19, 2001	Sheet 36 of 36	