INDEX

01 ---> This Page
02 ---> Clock GEN.
03 ---> CPU 0 1/2
04 ---> CPU 0 2/2
05 ---> CPU 1 1/2
06 ---> CPU 1 2/2
07 ---> CAP for P0 & P1
08 ---> CPU VID Compare
09 ---> MCH 1/4
10 ---> MCH 2/4
11 ---> MCH 3/4
12 ---> MCH 4/4
13 ---> DRCG
14 ---> ICH2 1/2
15 ---> ICH2 2/2
16 ---> CAP. for ICH2, Battery
17 ---> FWH
18 ---> MECC
19 ---> AGP Pro
20 ---> PCI1
21 ---> PCI2
22 ---> PCI3
23 ---> PCI 33 TERMINATION
24 ---> P64H
25 ---> PCI64_1
26 ---> PCI64_2
27 ---> PCI 66 TERMINATION
28 ---> LPC SIO & FDD Conn.
29 ---> IDE Connector
30 ---> KB/MS Connector
31 ---> COM1 & COM2 Connector
32 ---> Printer Port Connector
33 ---> USB Connector
34 ---> SB power for USB & Keyboard
35 ---> Audio CODAC ADI1885
36 ---> Speaker out & Audio Jack
37 ---> V REF. _1
38 ---> V REF. _2
39 ---> Power Connector
40 ---> PWM _1
41 ---> PWM _2
42 ---> Regulator
43 ---> MSI Front Panel
44 ---> LAN 82550 1/2
45 ---> LAN 82550 2/2
46 ---> AOLII
47 ---> SCSI 1/5 7899W_1
48 ---> SCSI 2/5 7899W_2
49 ---> SCSI 3/5 Channel 1
50 ---> SCSI 4/5 Channel 2
51 ---> SCSI 5/5 Misc.
52 ---> LPC Hardware Monitor
53 ---> Hardware Monitor (W83782D)
54 ---> IBM_1
55 ---> IBM_2
56 ---> MTG Hole

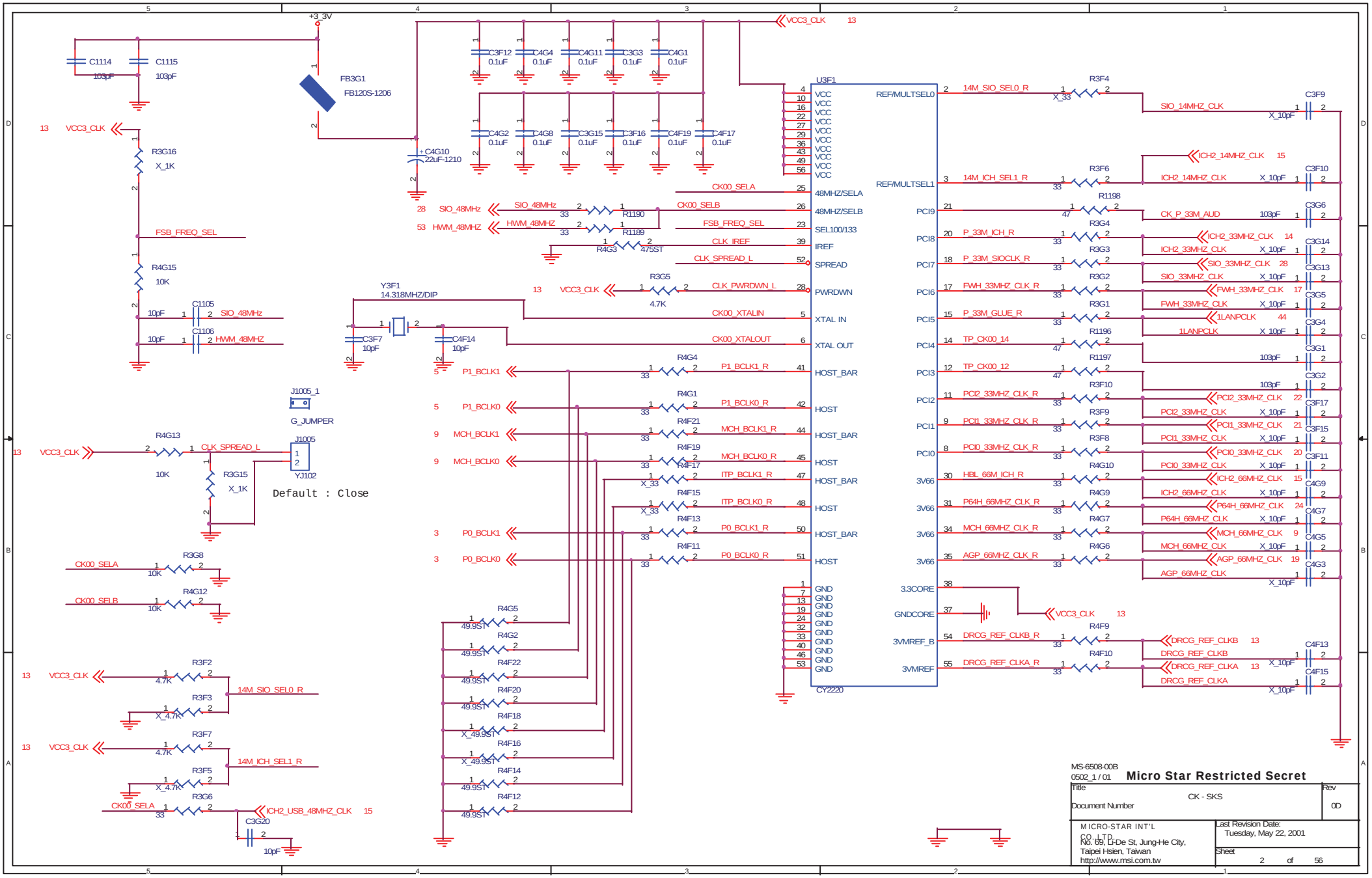
+3_3V
FB3G1
FB120S-1206
C1114
C1115
103pF
VCC3_CLK
13
C4G10
22uF-1210
C3F12 0.1uF
C4G4 0.1uF
C4G11 0.1uF
C3G3 0.1uF
C4G1 0.1uF
C4G2 0.1uF
C4G8 0.1uF
C3G15 0.1uF
C3F16 0.1uF
C4F19 0.1uF
C4F17 0.1uF
U3F1
CY2220
REF/MULTSEL0
REF/MULTSEL1
48MHZ/SELA
48MHZ/SELB
SEL100/133
IREF
SPREAD
PWRDWN
XTAL IN
XTAL OUT
HOST_BAR
HOST
3.3CORE
GNDCORE
3VMREF_B
3VMREF
14M_SIO_SEL0_R
14M_ICH_SEL1_R
SIO_14MHZ_CLK
ICH2_14MHZ_CLK
CK_P_33M_AUD
ICH2_33MHZ_CLK
SIO_33MHZ_CLK
FWH_33MHZ_CLK
1LANPCLK
TP_CK00_14
TP_CK00_12
PCI2_33MHZ_CLK
PCI1_33MHZ_CLK
PCI0_33MHZ_CLK
ICH2_66MHZ_CLK
P64H_66MHZ_CLK
MCH_66MHZ_CLK
AGP_66MHZ_CLK
DRCG_REF_CLKB
DRCG_REF_CLKA
CK00_SELA
CK00_SELB
FSB_FREQ_SEL
CLK_IREF
CLK_SPREAD_L
CLK_PWRDWN_L
CK00_XTALIN
CK00_XTALOUT
P1_BCLK1_R
P1_BCLK0_R
MCH_BCLK1_R
MCH_BCLK0_R
ITP_BCLK1_R
ITP_BCLK0_R
P0_BCLK1_R
P0_BCLK0_R
SIO_48MHz
HWM_48MHZ
R1190
R1189
R4G3
475ST
R3G5
4.7K
Y3F1
14.318MHZ/DIP
C3F7
10pF
C4F14
10pF
C1105
C1106
R4G15
10K
R3G16
X_1K
J1005_1
G_JUMPER
J1005
YJ102
R4G13
R3G15
Default : Close
R3G8
R4G12
R3F2
R3F3
R3F7
R3F5
R3G6
C3G20
ICH2_USB_48MHZ_CLK
15
R4G5
R4G2
R4F22
R4F20
R4F18
R4F16
R4F14
R4F12
49.9ST
R3F4
R3F6
R1198
R3G4
R3G3
R3G2
R3G1
R1196
R1197
R3F10
R3F9
R3F8
R4G10
R4G9
R4G7
R4G6
R4F9
R4F10
C3F9
C3F10
C3G6
C3G14
C3G13
C3G5
C3G4
C3G1
C3G2
C3F17
C3F15
C3F11
C4G9
C4G7
C4G5
C4G3
C4F13
C4F15
X_10pF
MS-6508-00B
0502_1 / 01
Micro Star Restricted Secret
Title
CK - SKS
Rev
0D
Document Number
MICRO-STAR INT'L CO.,LTD.
No. 69, Li-De St, Jung-He City,
Taipei Hsien, Taiwan
http://www.msi.com.tw
Last Revision Date:
Tuesday, May 22, 2001
Sheet
2 of 56

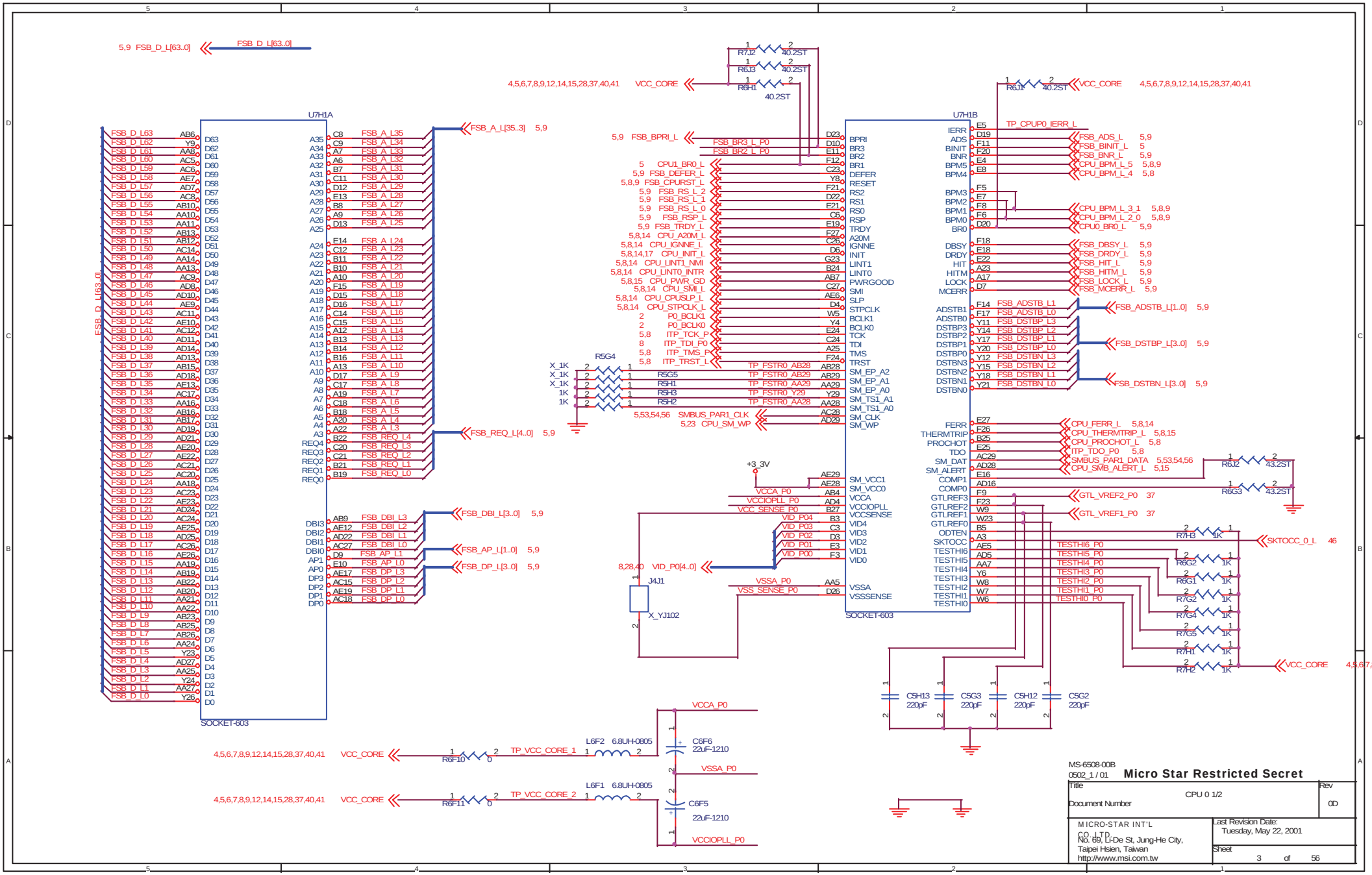
U7H1A
SOCKET-603
U7H1B
SOCKET-603
J4J1
X_YJ102
R5G4
R5G5
R5H1
R5H3
R5H2
R7J2
R6J3
R6H1
R6J1
R6J2
R6G3
R7H3
R6G2
R6G1
R7G2
R7G4
R7G5
R7H1
R7H2
R6F10
R6F11
L6F2 6.8UH-0805
L6F1 6.8UH-0805
C6F6 22uF-1210
C6F5 22uF-1210
C5H13 220pF
C5G3 220pF
C5H12 220pF
C5G2 220pF
VCC_CORE
VCCA_P0
VSSA_P0
VCCIOPLL_P0
TP_VCC_CORE_1
TP_VCC_CORE_2
MS-6508-00B
0502_1 / 01
Micro Star Restricted Secret
Title
CPU 0 1/2
Rev
0D
Document Number
MICRO-STAR INT'L CO.,LTD.
No. 69, Li-De St, Jung-He City,
Taipei Hsien, Taiwan
http://www.msi.com.tw
Last Revision Date:
Tuesday, May 22, 2001
Sheet
3 of 56

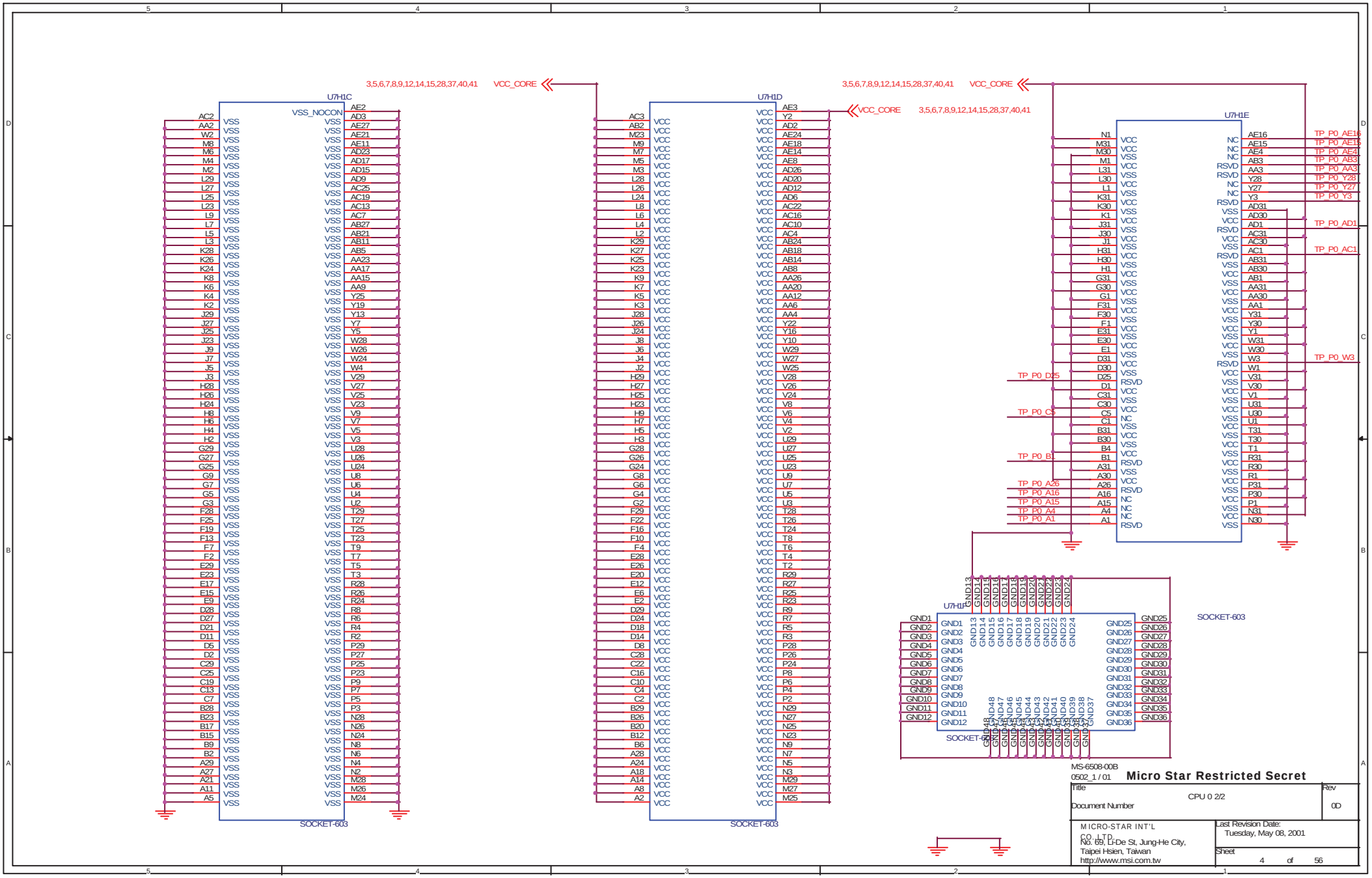
U7H1C
VSS_NOCON
SOCKET-603
3,5,6,7,8,9,12,14,15,28,37,40,41
VCC_CORE
U7H1D
SOCKET-603
U7H1E
TP_P0_AE16
TP_P0_AE15
TP_P0_AE4
TP_P0_AB3
TP_P0_AA3
TP_P0_Y28
TP_P0_Y27
TP_P0_Y3
TP_P0_AD1
TP_P0_AC1
TP_P0_W3
TP_P0_D25
TP_P0_C5
TP_P0_B1
TP_P0_A26
TP_P0_A16
TP_P0_A15
TP_P0_A4
TP_P0_A1
U7H1F
SOCKET-603
MS-6508-00B
0502_1 / 01
Micro Star Restricted Secret
Title
CPU 0 2/2
Rev
0D
Document Number
MICRO-STAR INT'L CO., LTD.
No. 69, Li-De St, Jung-He City,
Taipei Hsien, Taiwan
http://www.msi.com.tw
Last Revision Date:
Tuesday, May 08, 2001
Sheet
4 of 56

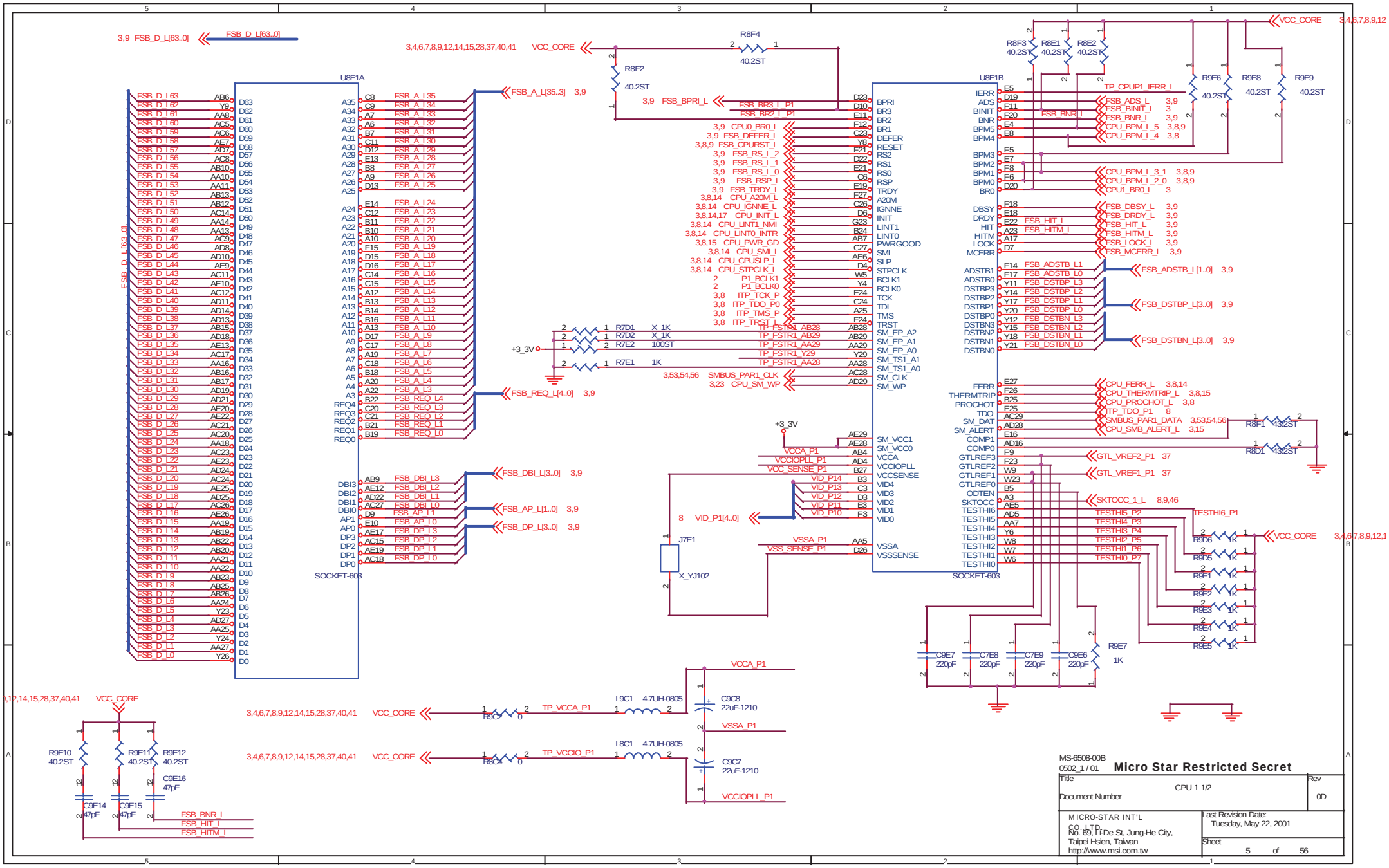
U8E1A
SOCKET-603
U8E1B
SOCKET-603
FSB_D_L[63..0]
FSB_A_L[35..3]
FSB_REQ_L[4..0]
FSB_DBI_L[3..0]
FSB_AP_L[1..0]
FSB_DP_L[3..0]
FSB_BPRI_L
FSB_BR3_L_P1
FSB_BR2_L_P1
VCC_CORE
+3_3V
R8F4
40.2ST
R8F2
40.2ST
R7D1 X_1K
R7D2 X_1K
R7E2 100ST
R7E1 1K
TP_FSTR1_AB28
TP_FSTR1_AB29
TP_FSTR1_AA29
TP_FSTR1_Y29
TP_FSTR1_AA28
SMBUS_PAR1_CLK
CPU_SM_WP
VCCA_P1
VCCIOPLL_P1
VCC_SENSE_P1
VSSA_P1
VSS_SENSE_P1
VID_P14
VID_P13
VID_P12
VID_P11
VID_P10
VID_P1[4..0]
J7E1
X_YJ102
FSB_ADS_L
FSB_BINIT_L
FSB_BNR_L
CPU_BPM_L_5
CPU_BPM_L_4
CPU_BPM_L_3_1
CPU_BPM_L_2_0
CPU1_BR0_L
FSB_DBSY_L
FSB_DRDY_L
FSB_HIT_L
FSB_HITM_L
FSB_LOCK_L
FSB_MCERR_L
FSB_ADSTB_L[1..0]
FSB_DSTBP_L[3..0]
FSB_DSTBN_L[3..0]
CPU_FERR_L
CPU_THERMTRIP_L
CPU_PROCHOT_L
ITP_TDO_P1
SMBUS_PAR1_DATA
CPU_SMB_ALERT_L
GTL_VREF2_P1
GTL_VREF1_P1
SKTOCC_1_L
TESTHI6_P1
TESTHI5_P2
TESTHI4_P3
TESTHI3_P4
TESTHI2_P5
TESTHI1_P6
TESTHI0_P7
R8F1 432ST
R8D1 432ST
R9E7 1K
C9E7 220pF
C7E8 220pF
C7E9 220pF
C9E6 220pF
R9E10 40.2ST
R9E11 40.2ST
R9E12 40.2ST
C9E16 47pF
C9E14 47pF
C9E15 47pF
R9C2 0
R8C4 0
TP_VCCA_P1
TP_VCCIO_P1
L9C1 4.7UH-0805
L8C1 4.7UH-0805
C9C8 22uF-1210
C9C7 22uF-1210
VCCIOPLL_P1
MS-6508-00B
0502_1 / 01
Micro Star Restricted Secret
Title
CPU 1 1/2
Rev
0D
Document Number
MICRO-STAR INT'L CO.,LTD.
No. 69, Li-De St, Jung-He City, Taipei Hsien, Taiwan
http://www.msi.com.tw
Last Revision Date:
Tuesday, May 22, 2001
Sheet
5 of 56

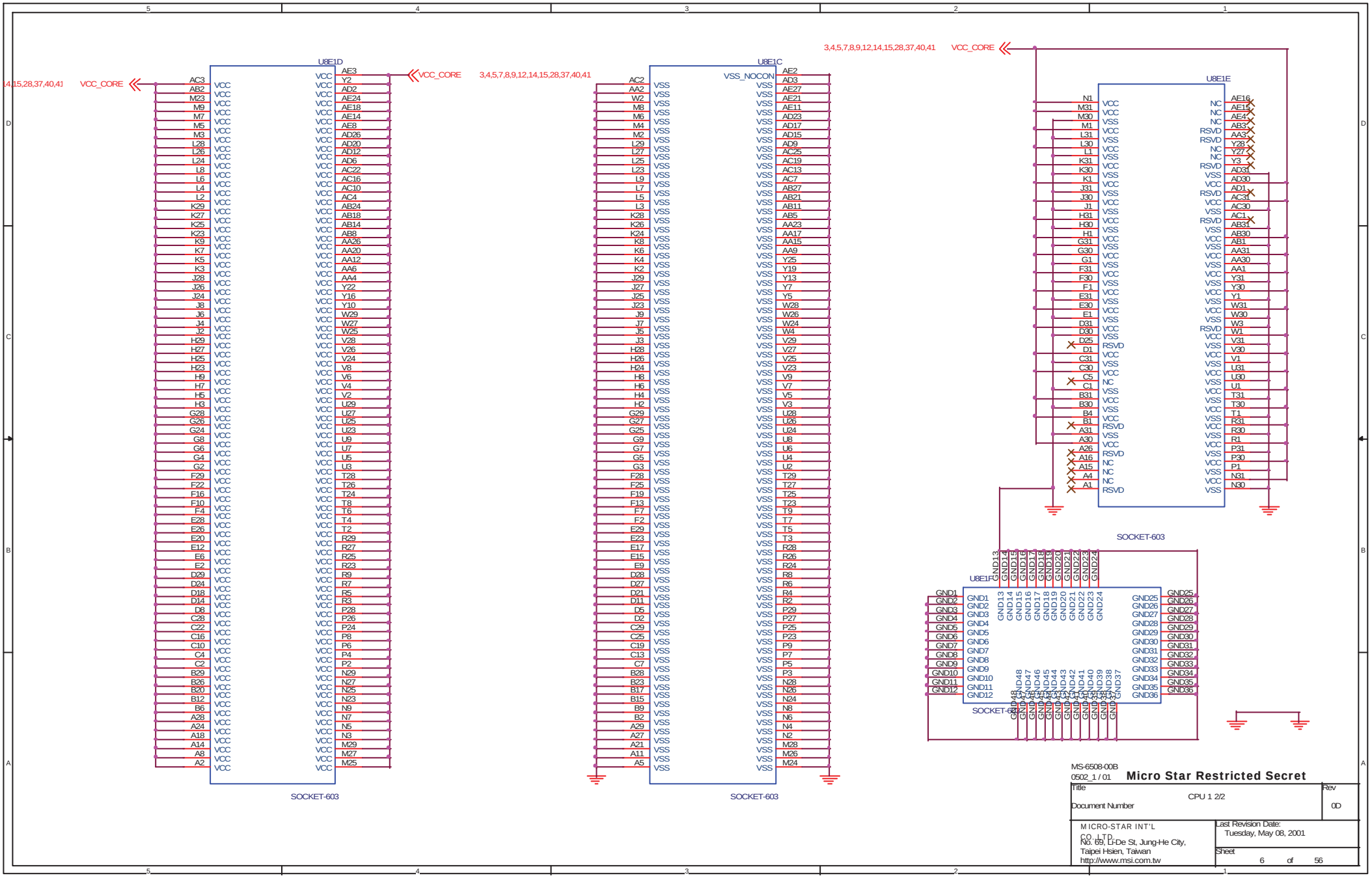
U8E1D
VCC_CORE
3,4,5,7,8,9,12,14,15,28,37,40,41
SOCKET-603
U8E1C
VSS_NOCON
SOCKET-603
U8E1E
SOCKET-603
U8E1F
SOCKET-603
MS-6508-00B
0502_1 / 01
Micro Star Restricted Secret
Title
CPU 1 2/2
Rev
0D
Document Number
MICRO-STAR INT'L CO., LTD.
No. 69, Li-De St, Jung-He City,
Taipei Hsien, Taiwan
http://www.msi.com.tw
Last Revision Date:
Tuesday, May 08, 2001
Sheet
6 of 56

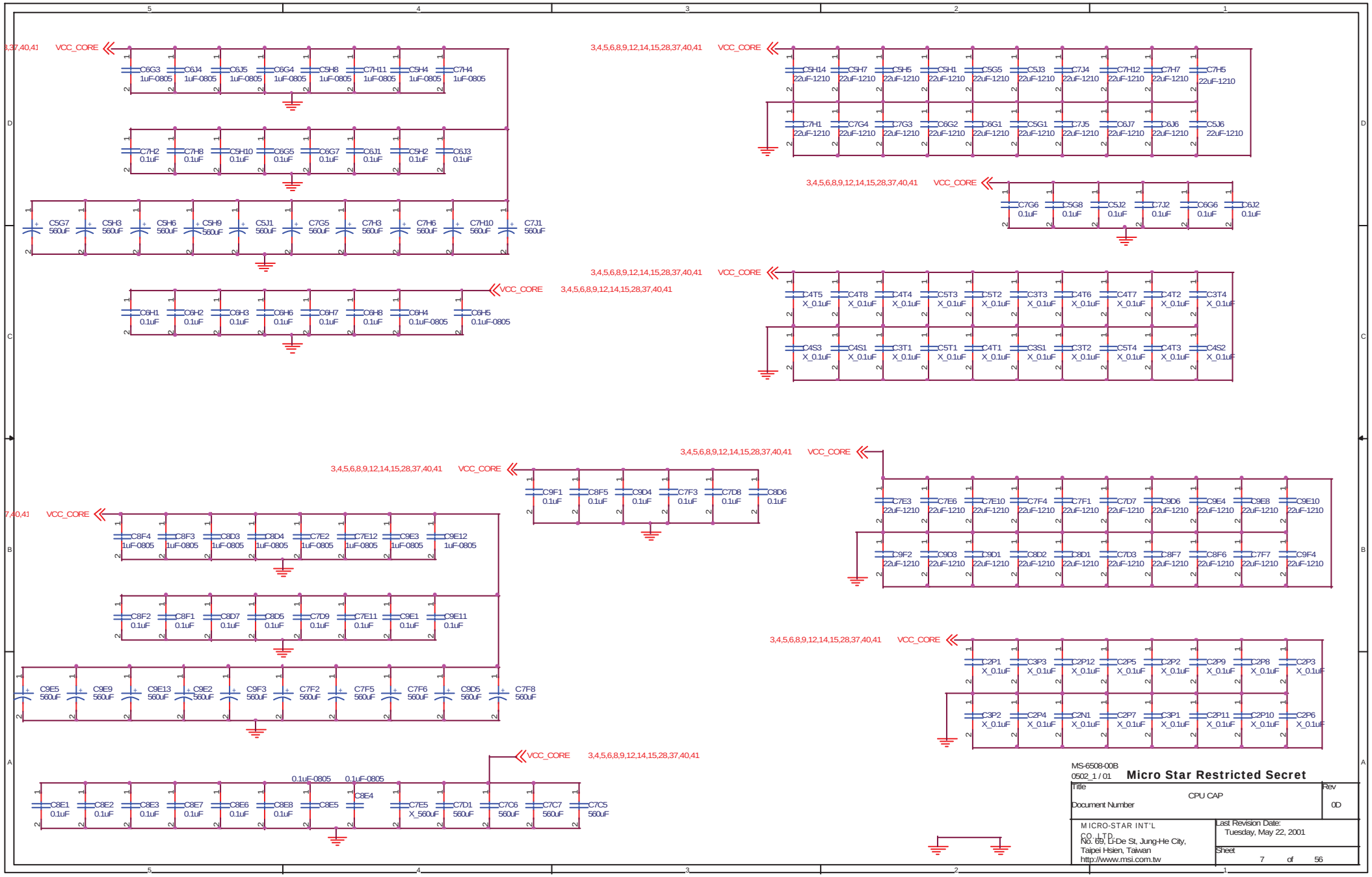
VCC_CORE
3,4,5,6,8,9,12,14,15,28,37,40,41
C6G3 1uF-0805
C6J4 1uF-0805
C6J5 1uF-0805
C6G4 1uF-0805
C5H8 1uF-0805
C7H11 1uF-0805
C5H4 1uF-0805
C7H4 1uF-0805
C7H2 0.1uF
C7H8 0.1uF
C5H10 0.1uF
C6G5 0.1uF
C6G7 0.1uF
C6J1 0.1uF
C5H2 0.1uF
C6J3 0.1uF
C5G7 560uF
C5H3 560uF
C5H6 560uF
C5H9 560uF
C5J1 560uF
C7G5 560uF
C7H3 560uF
C7H6 560uF
C7H10 560uF
C7J1 560uF
C6H1 0.1uF
C6H2 0.1uF
C6H3 0.1uF
C6H6 0.1uF
C6H7 0.1uF
C6H8 0.1uF
C6H4 0.1uF-0805
C6H5 0.1uF-0805
C5H14 22uF-1210
C5H7 22uF-1210
C5H5 22uF-1210
C5H1 22uF-1210
C5G5 22uF-1210
C5J3 22uF-1210
C7J4 22uF-1210
C7H12 22uF-1210
C7H7 22uF-1210
C7H5 22uF-1210
C7H1 22uF-1210
C7G4 22uF-1210
C7G3 22uF-1210
C6G2 22uF-1210
C6G1 22uF-1210
C5G1 22uF-1210
C7J5 22uF-1210
C6J7 22uF-1210
C6J6 22uF-1210
C5J6 22uF-1210
C7G6 0.1uF
C5G8 0.1uF
C5J2 0.1uF
C7J2 0.1uF
C6G6 0.1uF
C6J2 0.1uF
C4T5 X_0.1uF
C4T8 X_0.1uF
C4T4 X_0.1uF
C5T3 X_0.1uF
C5T2 X_0.1uF
C3T3 X_0.1uF
C4T6 X_0.1uF
C4T7 X_0.1uF
C4T2 X_0.1uF
C3T4 X_0.1uF
C4S3 X_0.1uF
C4S1 X_0.1uF
C3T1 X_0.1uF
C5T1 X_0.1uF
C4T1 X_0.1uF
C3S1 X_0.1uF
C3T2 X_0.1uF
C5T4 X_0.1uF
C4T3 X_0.1uF
C4S2 X_0.1uF
C9F1 0.1uF
C8F5 0.1uF
C9D4 0.1uF
C7F3 0.1uF
C7D8 0.1uF
C8D6 0.1uF
C7E3 22uF-1210
C7E6 22uF-1210
C7E10 22uF-1210
C7F4 22uF-1210
C7F1 22uF-1210
C7D7 22uF-1210
C9D6 22uF-1210
C9E4 22uF-1210
C9E8 22uF-1210
C9E10 22uF-1210
C9F2 22uF-1210
C9D3 22uF-1210
C9D1 22uF-1210
C8D2 22uF-1210
C8D1 22uF-1210
C7D3 22uF-1210
C8F7 22uF-1210
C8F6 22uF-1210
C7F7 22uF-1210
C9F4 22uF-1210
C8F4 1uF-0805
C8F3 1uF-0805
C8D3 1uF-0805
C8D4 1uF-0805
C7E2 1uF-0805
C7E12 1uF-0805
C9E3 1uF-0805
C9E12 1uF-0805
C8F2 0.1uF
C8F1 0.1uF
C8D7 0.1uF
C8D5 0.1uF
C7D9 0.1uF
C7E11 0.1uF
C9E1 0.1uF
C9E11 0.1uF
C9E5 560uF
C9E9 560uF
C9E13 560uF
C9E2 560uF
C9F3 560uF
C7F2 560uF
C7F5 560uF
C7F6 560uF
C9D5 560uF
C7F8 560uF
C2P1 X_0.1uF
C3P3 X_0.1uF
C2P12 X_0.1uF
C2P5 X_0.1uF
C2P2 X_0.1uF
C2P9 X_0.1uF
C2P8 X_0.1uF
C2P3 X_0.1uF
C3P2 X_0.1uF
C2P4 X_0.1uF
C2N1 X_0.1uF
C2P7 X_0.1uF
C3P1 X_0.1uF
C2P11 X_0.1uF
C2P10 X_0.1uF
C2P6 X_0.1uF
0.1uF-0805
0.1uF-0805
C8E1 0.1uF
C8E2 0.1uF
C8E3 0.1uF
C8E7 0.1uF
C8E6 0.1uF
C8E8 0.1uF
C8E5
C8E4
C7E5 X_560uF
C7D1 560uF
C7C6 560uF
C7C7 560uF
C7C5 560uF
MS-6508-00B
0502_1 / 01
Micro Star Restricted Secret
Title
CPU CAP
Rev
0D
Document Number
MICRO-STAR INT'L CO.,LTD.
No. 69, Li-De St, Jung-He City,
Taipei Hsien, Taiwan
http://www.msi.com.tw
Last Revision Date:
Tuesday, May 22, 2001
Sheet
7 of 56

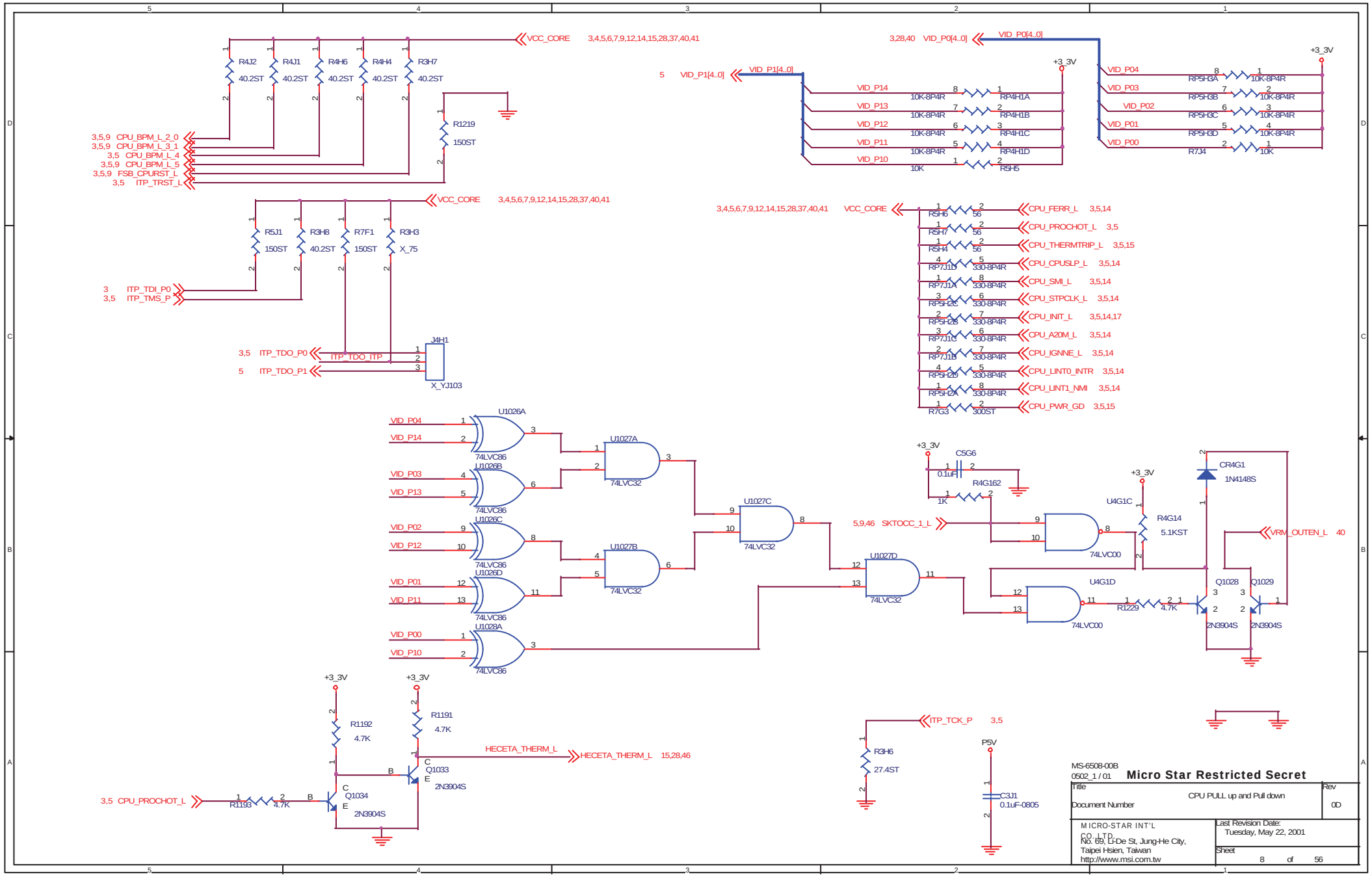
VCC_CORE 3,4,5,6,7,9,12,14,15,28,37,40,41
R4J2 40.2ST
R4J1 40.2ST
R4H6 40.2ST
R4H4 40.2ST
R3H7 40.2ST
R1219 150ST
3,5,9 CPU_BPM_L_2_0
3,5,9 CPU_BPM_L_3_1
3,5 CPU_BPM_L_4
3,5,9 CPU_BPM_L_5
3,5,9 FSB_CPURST_L
3,5 ITP_TRST_L
R5J1 150ST
R3H8 40.2ST
R7F1 150ST
R3H3 X_75
3 ITP_TDI_P0
3,5 ITP_TMS_P
3,5 ITP_TDO_P0
5 ITP_TDO_P1
ITP_TDO_ITP
J4H1
X_YJ103
3,28,40 VID_P0[4..0]
5 VID_P1[4..0]
+3_3V
VID_P14
VID_P13
VID_P12
VID_P11
VID_P10
10K-8P4R
RP4H1A
RP4H1B
RP4H1C
RP4H1D
10K
R5H5
VID_P04
VID_P03
VID_P02
VID_P01
VID_P00
RP5H3A
RP5H3B
RP5H3C
RP5H3D
R7J4
3,4,5,6,7,9,12,14,15,28,37,40,41 VCC_CORE
R5H6 56
R5H7 56
R5H4 56
RP7J1D 330-8P4R
RP7J1A 330-8P4R
RP5H2C 330-8P4R
RP5H2B 330-8P4R
RP7J1C 330-8P4R
RP7J1B 330-8P4R
RP5H2D 330-8P4R
RP5H2A 330-8P4R
R7G3 300ST
CPU_FERR_L 3,5,14
CPU_PROCHOT_L 3,5
CPU_THERMTRIP_L 3,5,15
CPU_CPUSLP_L 3,5,14
CPU_SMI_L 3,5,14
CPU_STPCLK_L 3,5,14
CPU_INIT_L 3,5,14,17
CPU_A20M_L 3,5,14
CPU_IGNNE_L 3,5,14
CPU_LINT0_INTR 3,5,14
CPU_LINT1_NMI 3,5,14
CPU_PWR_GD 3,5,15
U1026A
U1026B
U1026C
U1026D
U1028A
74LVC86
U1027A
U1027B
U1027C
U1027D
74LVC32
C5G6 0.1uF
R4G162 1K
5,9,46 SKTOCC_1_L
U4G1C
U4G1D
74LVC00
R4G14 5.1KST
CR4G1 1N4148S
VRM_OUTEN_L 40
R1229 4.7K
Q1028
Q1029
2N3904S
R1192 4.7K
R1191 4.7K
HECETA_THERM_L
HECETA_THERM_L 15,28,46
Q1033
Q1034
3,5 CPU_PROCHOT_L
R1193 4.7K
ITP_TCK_P 3,5
R3H6 27.4ST
P5V
C3J1 0.1uF-0805
MS-6508-00B
0502_1 / 01
Micro Star Restricted Secret
Title
CPU PULL up and Pull down
Rev
0D
Document Number
MICRO-STAR INT'L CO.,LTD.
No. 69, Li-De St, Jung-He City,
Taipei Hsien, Taiwan
http://www.msi.com.tw
Last Revision Date:
Tuesday, May 22, 2001
Sheet
8 of 56

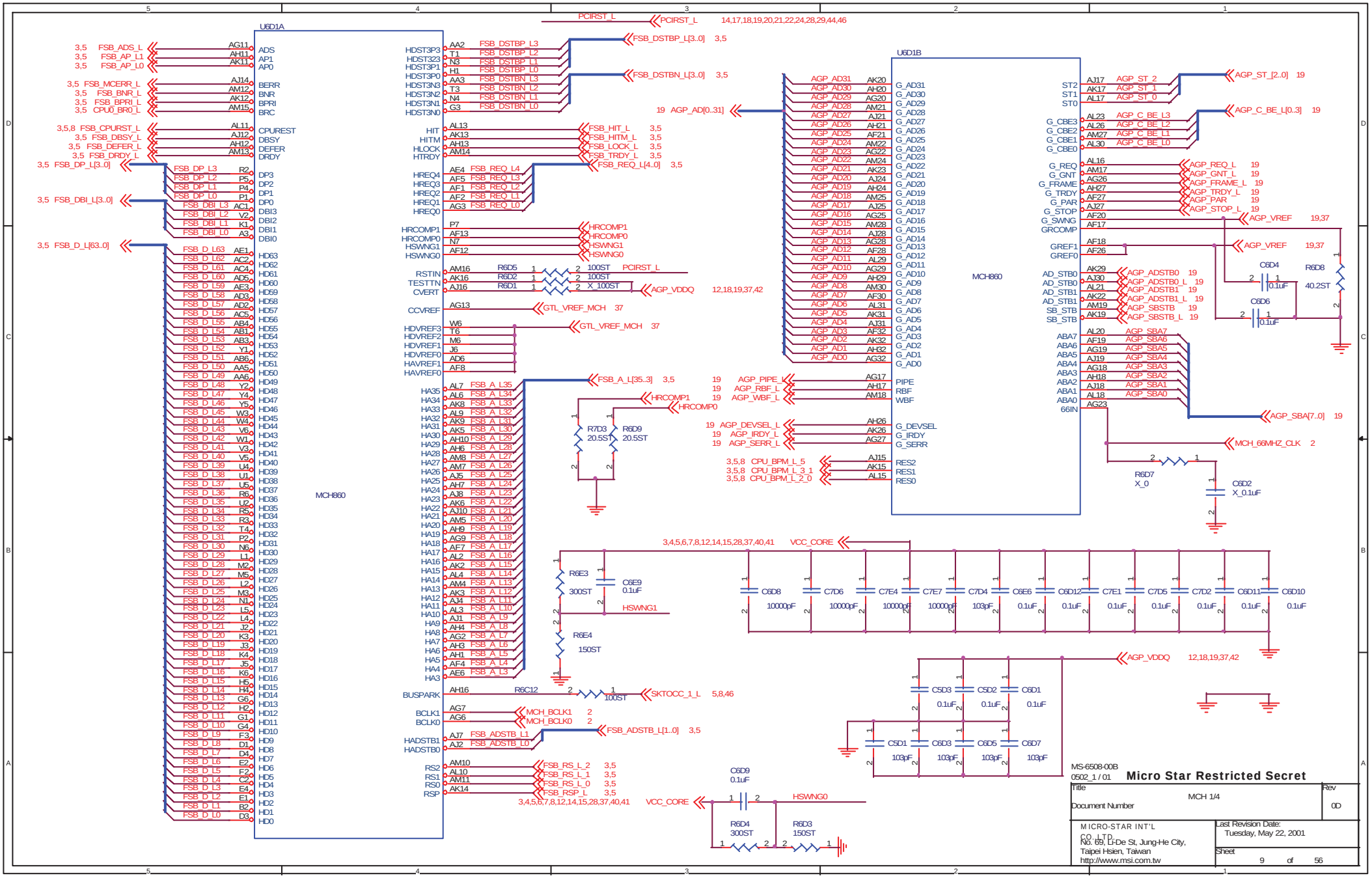
U6D1A
MCH860
U6D1B
MCH860
PCIRST_L
14,17,18,19,20,21,22,24,28,29,44,46
FSB_DSTBP_L[3..0] 3,5
FSB_DSTBN_L[3..0] 3,5
19 AGP_AD[0..31]
FSB_HIT_L 3,5
FSB_HITM_L 3,5
FSB_LOCK_L 3,5
FSB_TRDY_L 3,5
FSB_REQ_L[4..0] 3,5
HRCOMP1
HRCOMP0
HSWNG1
HSWNG0
AGP_VDDQ 12,18,19,37,42
GTL_VREF_MCH 37
FSB_A_L[35..3] 3,5
AGP_PIPE_L 19
AGP_RBF_L 19
AGP_WBF_L 19
AGP_DEVSEL_L 19
AGP_IRDY_L 19
AGP_SERR_L 19
CPU_BPM_L_5 3,5,8
CPU_BPM_L_3_1 3,5,8
CPU_BPM_L_2_0 3,5,8
AGP_ST_[2..0] 19
AGP_C_BE_L[0..3] 19
AGP_REQ_L 19
AGP_GNT_L 19
AGP_FRAME_L 19
AGP_TRDY_L 19
AGP_PAR 19
AGP_STOP_L 19
AGP_VREF 19,37
AGP_ADSTB0 19
AGP_ADSTB0_L 19
AGP_ADSTB1 19
AGP_ADSTB1_L 19
AGP_SBSTB 19
AGP_SBSTB_L 19
AGP_SBA[7..0] 19
MCH_66MHZ_CLK 2
3,4,5,6,7,8,12,14,15,28,37,40,41 VCC_CORE
AGP_VDDQ 12,18,19,37,42
SKTOCC_1_L 5,8,46
MCH_BCLK1 2
MCH_BCLK0 2
FSB_ADSTB_L[1..0] 3,5
FSB_RS_L_2 3,5
FSB_RS_L_1 3,5
FSB_RS_L_0 3,5
FSB_RSP_L 3,5
3,4,5,6,7,8,12,14,15,28,37,40,41 VCC_CORE
HSWNG0
HSWNG1
MS-6508-00B
0502_1 / 01
Micro Star Restricted Secret
Title
MCH 1/4
Rev
0D
Document Number
MICRO-STAR INT'L CO.,LTD.
No. 69, Li-De St, Jung-He City, Taipei Hsien, Taiwan
http://www.msi.com.tw
Last Revision Date:
Tuesday, May 22, 2001
Sheet
9 of 56

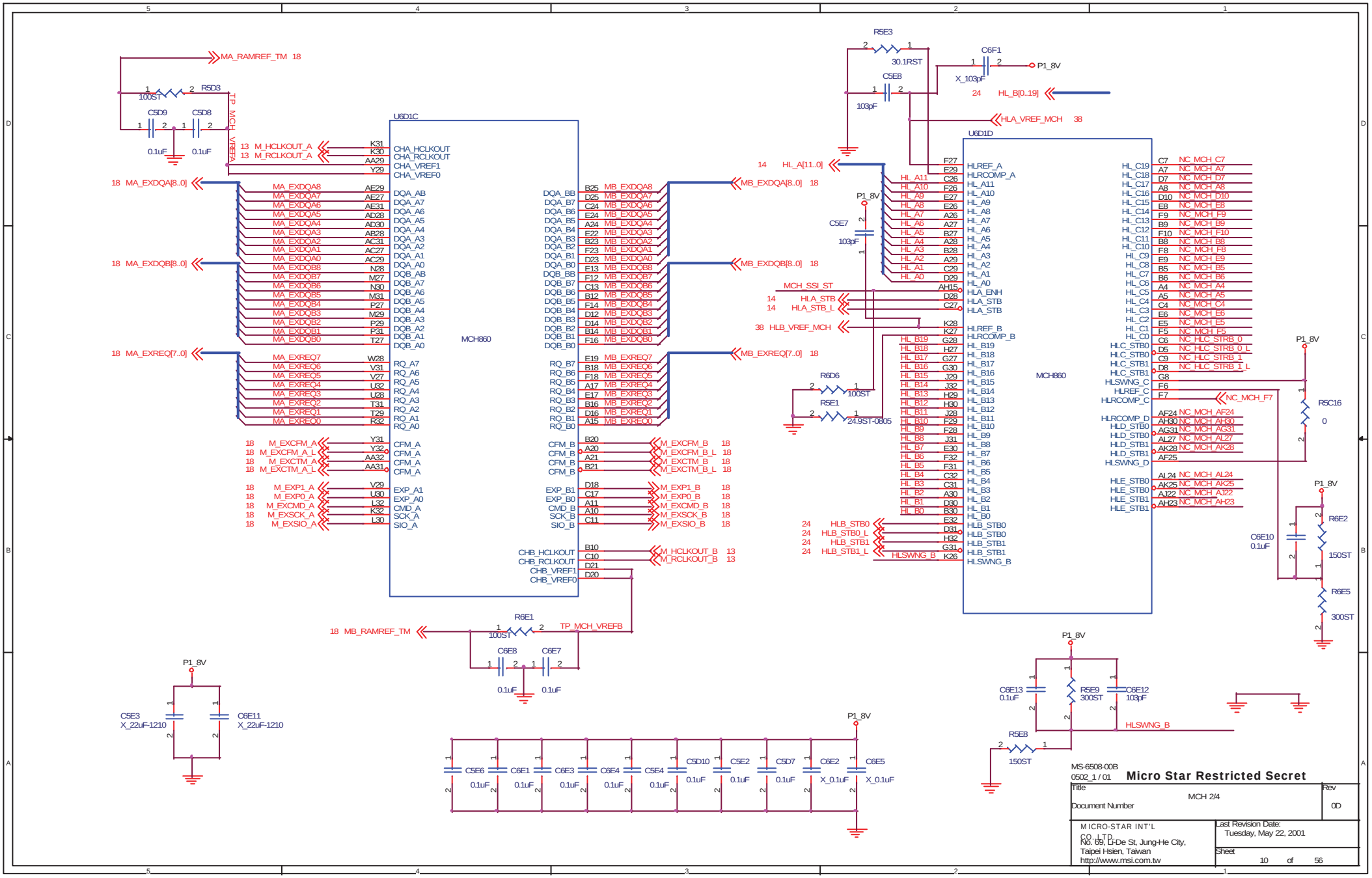

MS-6508-00B
0502_1 / 01

Micro Star Restricted Secret

Title: MCH 2/4	Rev: 0D
Document Number	
MICRO-STAR INT'L CO., LTD. No. 69, Li-De St, Jung-He City, Taipei Hsien, Taiwan http://www.msi.com.tw	Last Revision Date: Tuesday, May 22, 2001
	Sheet 10 of 56

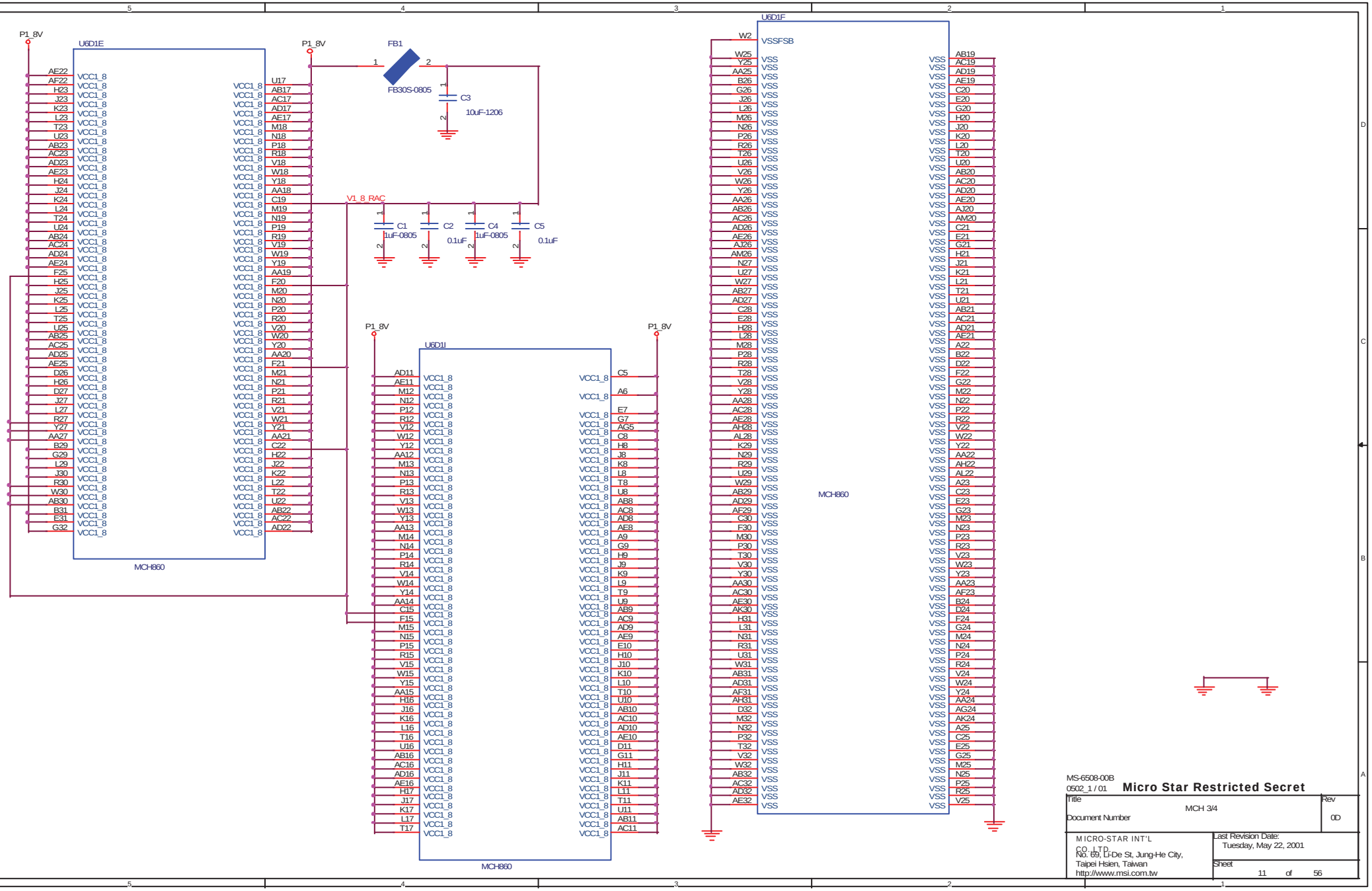
P1_8V
U6D1E
MCH860
FB1
FB30S-0805
C3
10uF-1206
V1_8_RAC
C1
1uF-0805
C2
0.1uF
C4
1uF-0805
C5
0.1uF
U6D1I
U6D1F
VSSFSB
VCC1_8
VSS
MS-6508-00B
0502_1 / 01
Micro Star Restricted Secret
Title
MCH 3/4
Rev
0D
Document Number
MICRO-STAR INT'L CO., LTD.
No. 69, Li-De St, Jung-He City,
Taipei Hsien, Taiwan
http://www.msi.com.tw
Last Revision Date:
Tuesday, May 22, 2001
Sheet
11 of 56

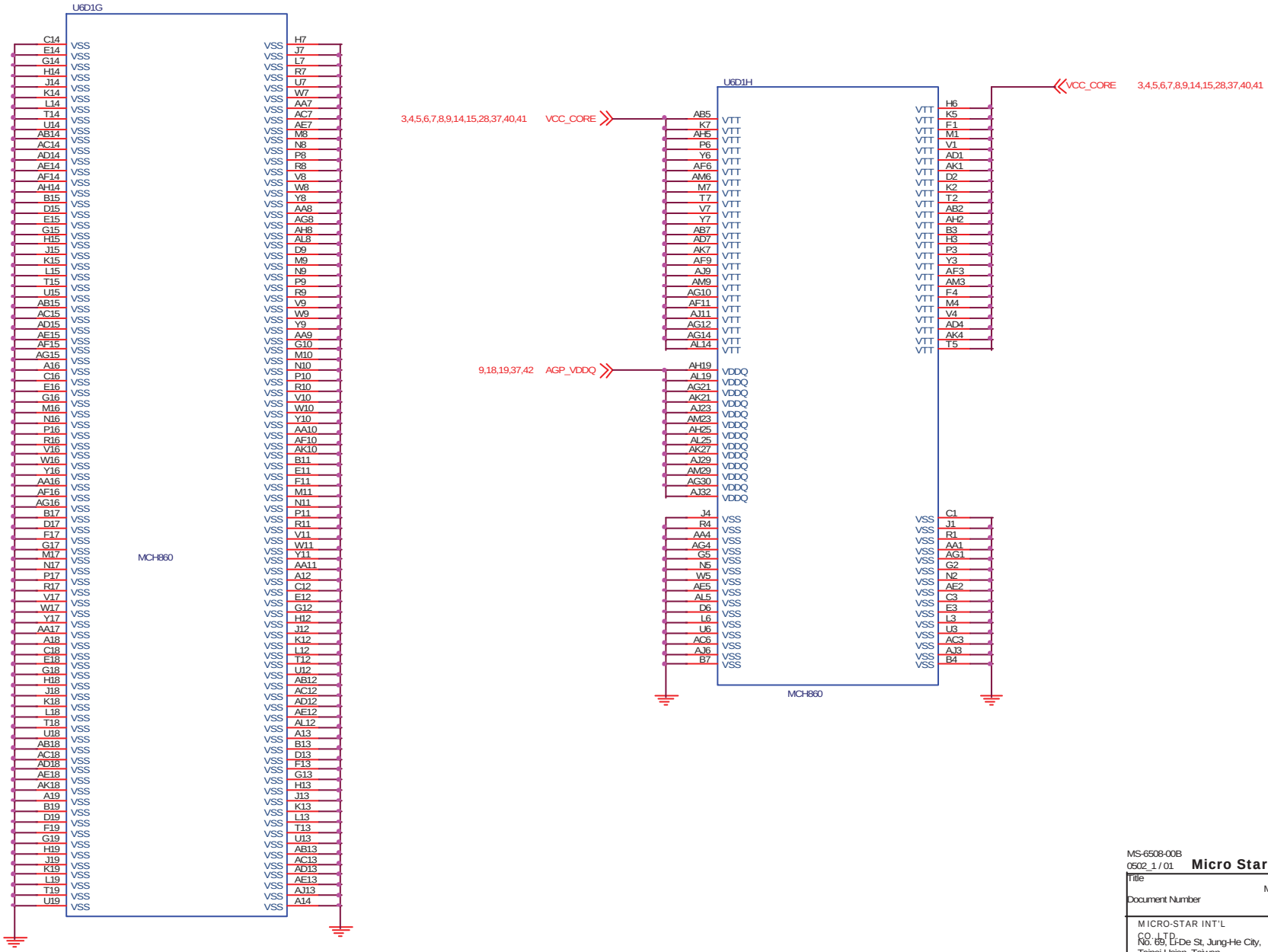

MS-6508-00B
0502_1 / 01

Micro Star Restricted Secret

Title	MCH 4/4	Rev
Document Number		0D
MICRO-STAR INT'L CO., LTD. No. 69, Li-De St, Jung-He City, Taipei Hsien, Taiwan http://www.msi.com.tw	Last Revision Date: Tuesday, May 08, 2001	
	Sheet 12 of 56	

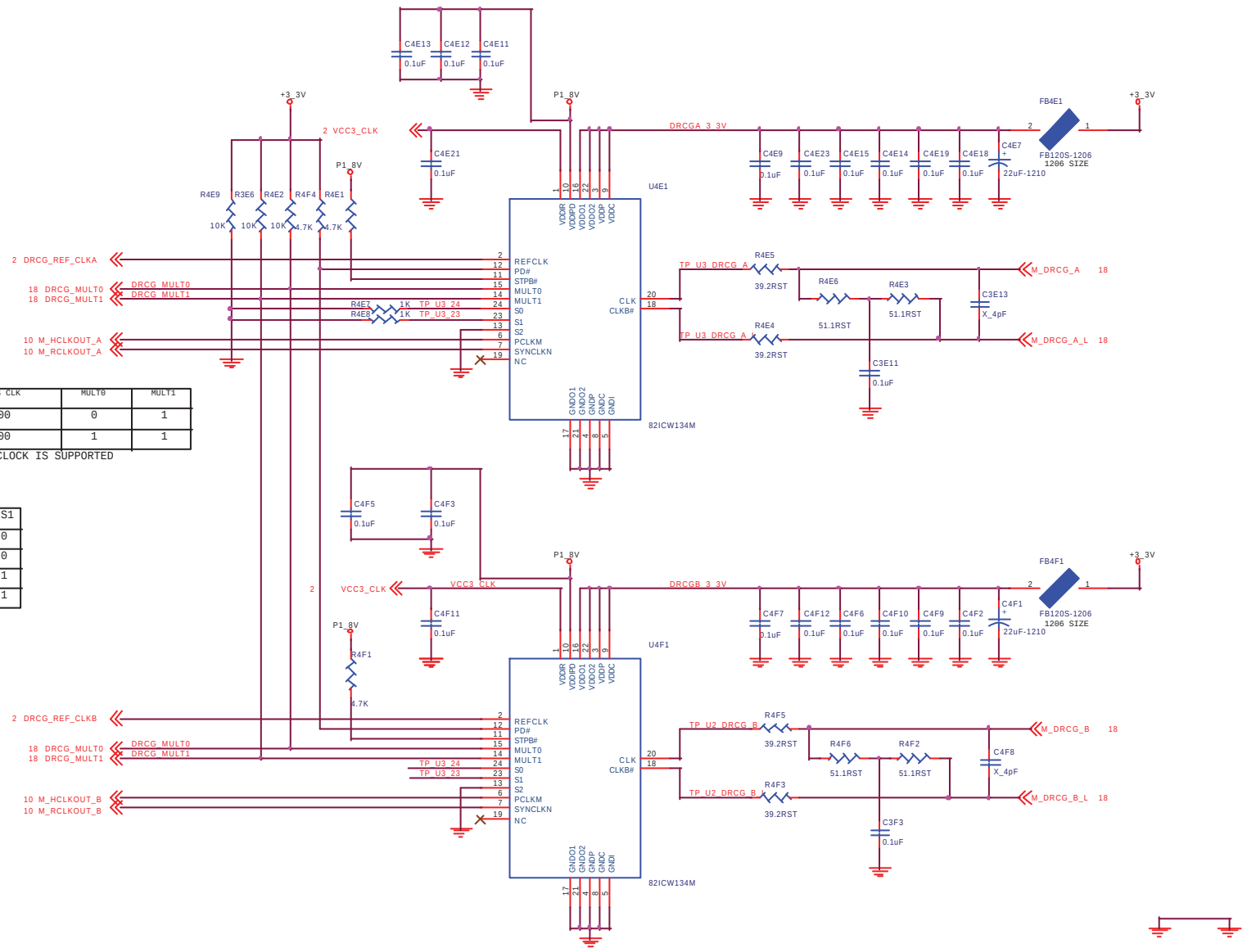

	SYSTEM BUS	RAMBUS CLK	MULT0	MULT1
X3	100	300	0	1
X4	100	400	1	1

NOTE: ONLY 400MHZ RAMBUS CLOCK IS SUPPORTED FOR SYSTEMS USING THE MEC.

FUNCTION	S0	S1
NORMAL	0	0
BYPASS	1	0
TEST	1	1
OUTPUT TEST <OE>	0	1

DRCG (RAMBUS CLOCK)

MS-6508-00B
0502_1 / 01

Micro Star Restricted Secret

Title	DRCG	Rev 0D
Document Number		

MICRO-STAR INT'L CO.,LTD.
No. 69, Li-De St, Jung-He City, Taipei Hsien, Taiwan
http://www.msi.com.tw

Last Revision Date: Tuesday, May 22, 2001

Sheet 13 of 56

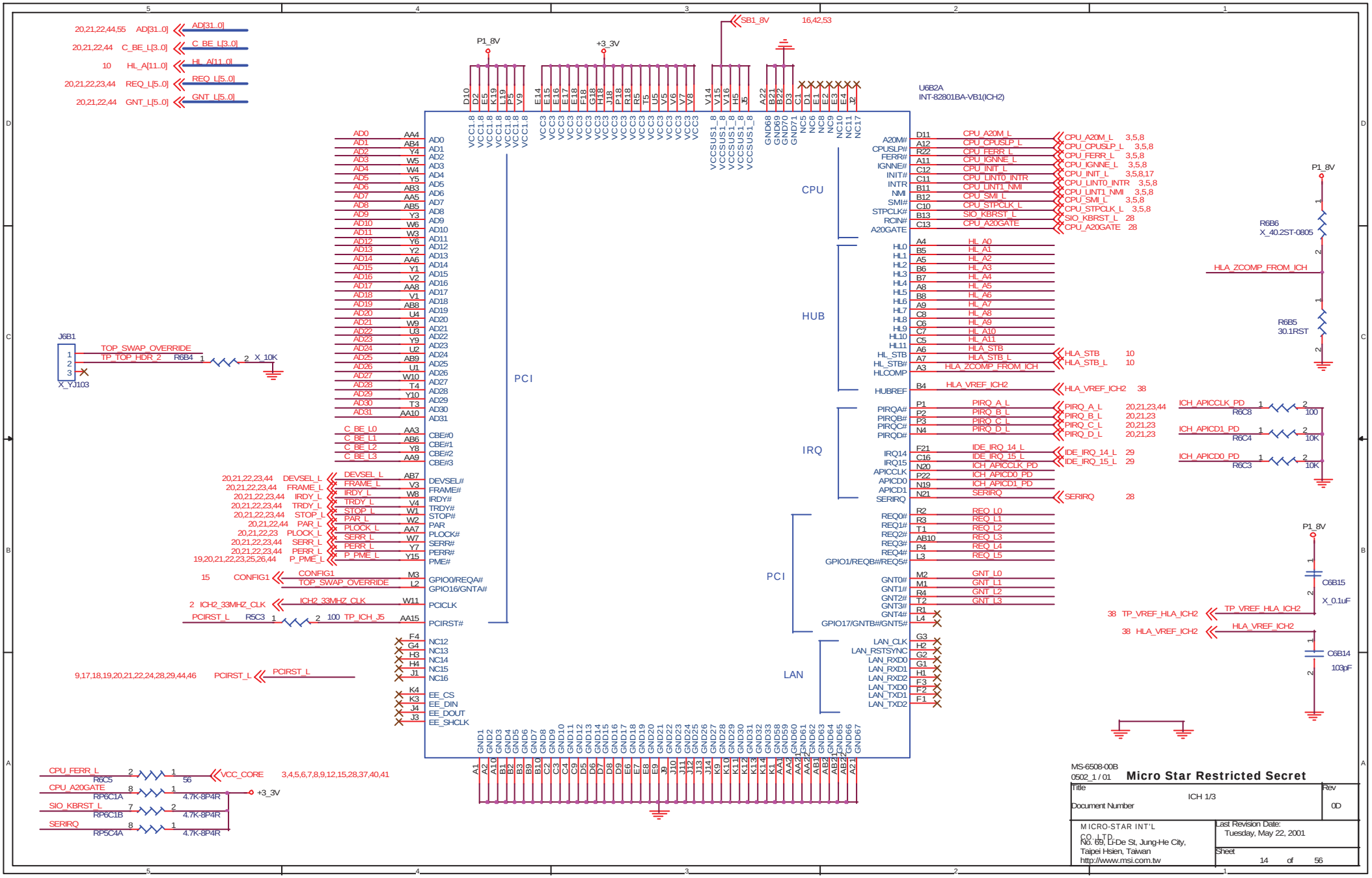
U6B2A
INT-82801BA-VB1(ICH2)
PCI
CPU
HUB
IRQ
LAN
J6B1
X_YJ103
TOP_SWAP_OVERRIDE
TP_TOP_HDR_2
R6B4
X_10K
P1_8V
+3_3V
SB1_8V
R6B6
X_40.2ST-0805
HLA_ZCOMP_FROM_ICH
R6B5
30.1RST
ICH_APICCLK_PD
R6C8
100
ICH_APICD1_PD
R6C4
10K
ICH_APICD0_PD
R6C3
10K
C6B15
X_0.1uF
TP_VREF_HLA_ICH2
HLA_VREF_ICH2
C6B14
103pF
CPU_FERR_L
R6C5
56
VCC_CORE
CPU_A20GATE
RP6C1A
4.7K-8P4R
SIO_KBRST_L
RP6C1B
4.7K-8P4R
SERIRQ
RP5C4A
4.7K-8P4R
MS-6508-00B
0502_1 / 01
Micro Star Restricted Secret
Title
ICH 1/3
Rev
0D
Document Number
MICRO-STAR INT'L CO.,LTD.
No. 69, Li-De St, Jung-He City,
Taipei Hsien, Taiwan
http://www.msi.com.tw
Last Revision Date:
Tuesday, May 22, 2001
Sheet
14 of 56

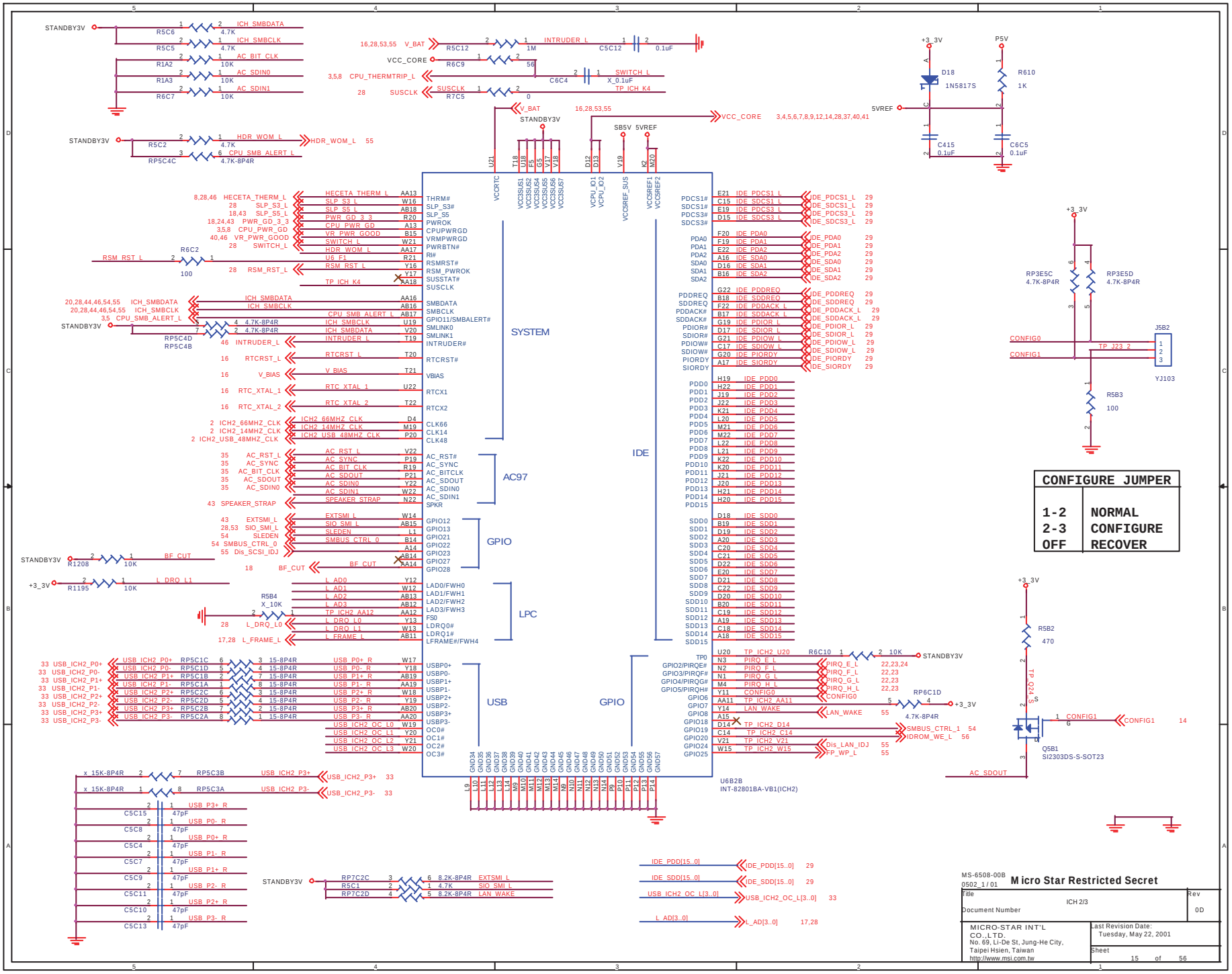
SYSTEM
AC97
GPIO
LPC
USB
IDE
GPIO
U6B2B
INT-82801BA-VB1(ICH2)
CONFIGURE JUMPER
1-2 NORMAL
2-3 CONFIGURE
OFF RECOVER
Micro Star Restricted Secret
MS-6508-00B
0502_1/01
Title
ICH 2/3
Document Number
Rev
0D
MICRO-STAR INT'L CO.,LTD.
No. 69, Li-De St, Jung-He City, Taipei Hsien, Taiwan
http://www.msi.com.tw
Last Revision Date:
Tuesday, May 22, 2001
Sheet
15 of 56

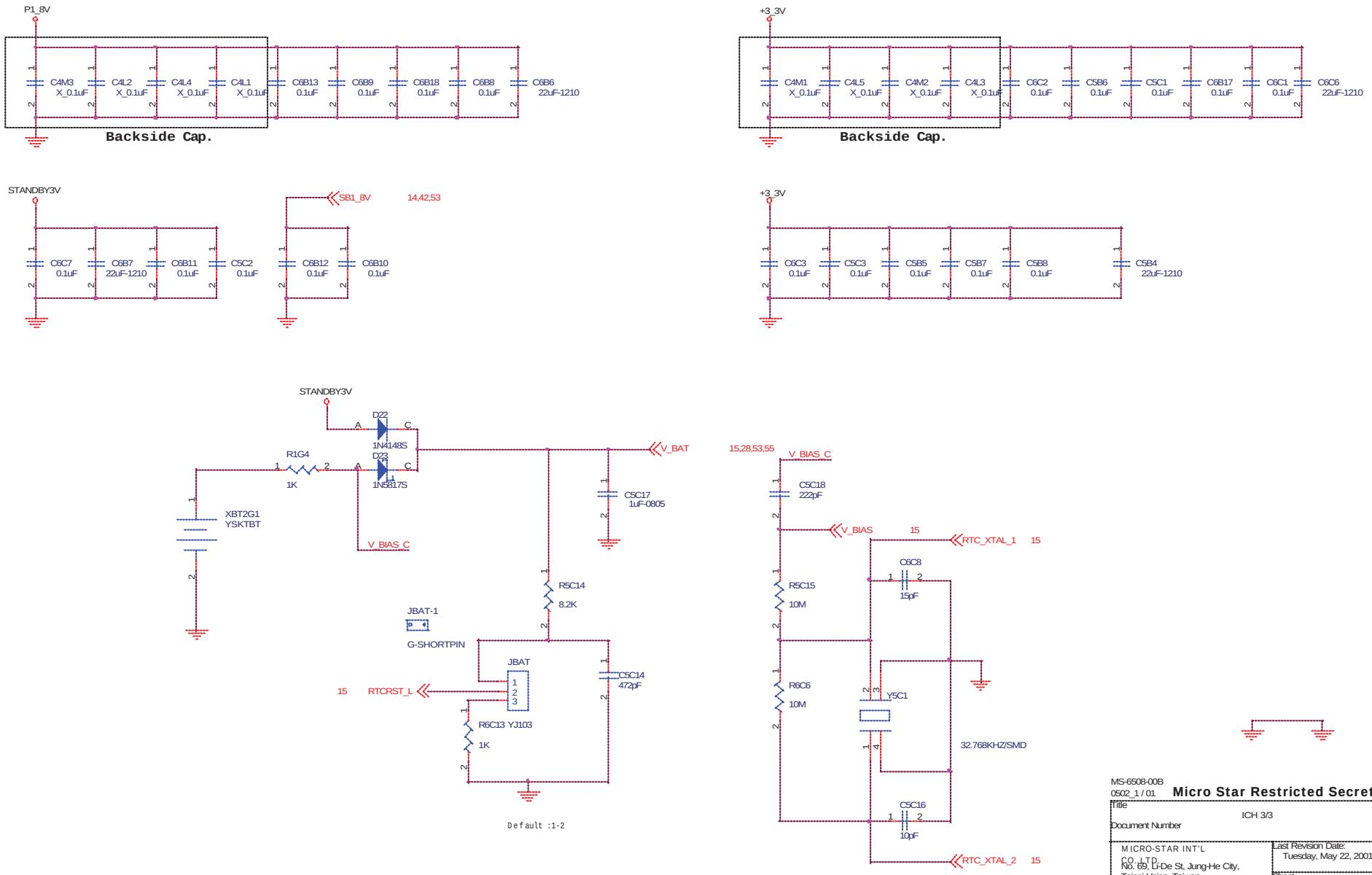

MS-6508-00B
0502_1 / 01

Micro Star Restricted Secret

Title	ICH 3/3
Rev	0D
Document Number	
MICRO-STAR INT'L CO., LTD. No. 69, Li-De St, Jung-He City, Taipei Hsien, Taiwan http://www.msi.com.tw	Last Revision Date: Tuesday, May 22, 2001
	Sheet 16 of 56

FWH

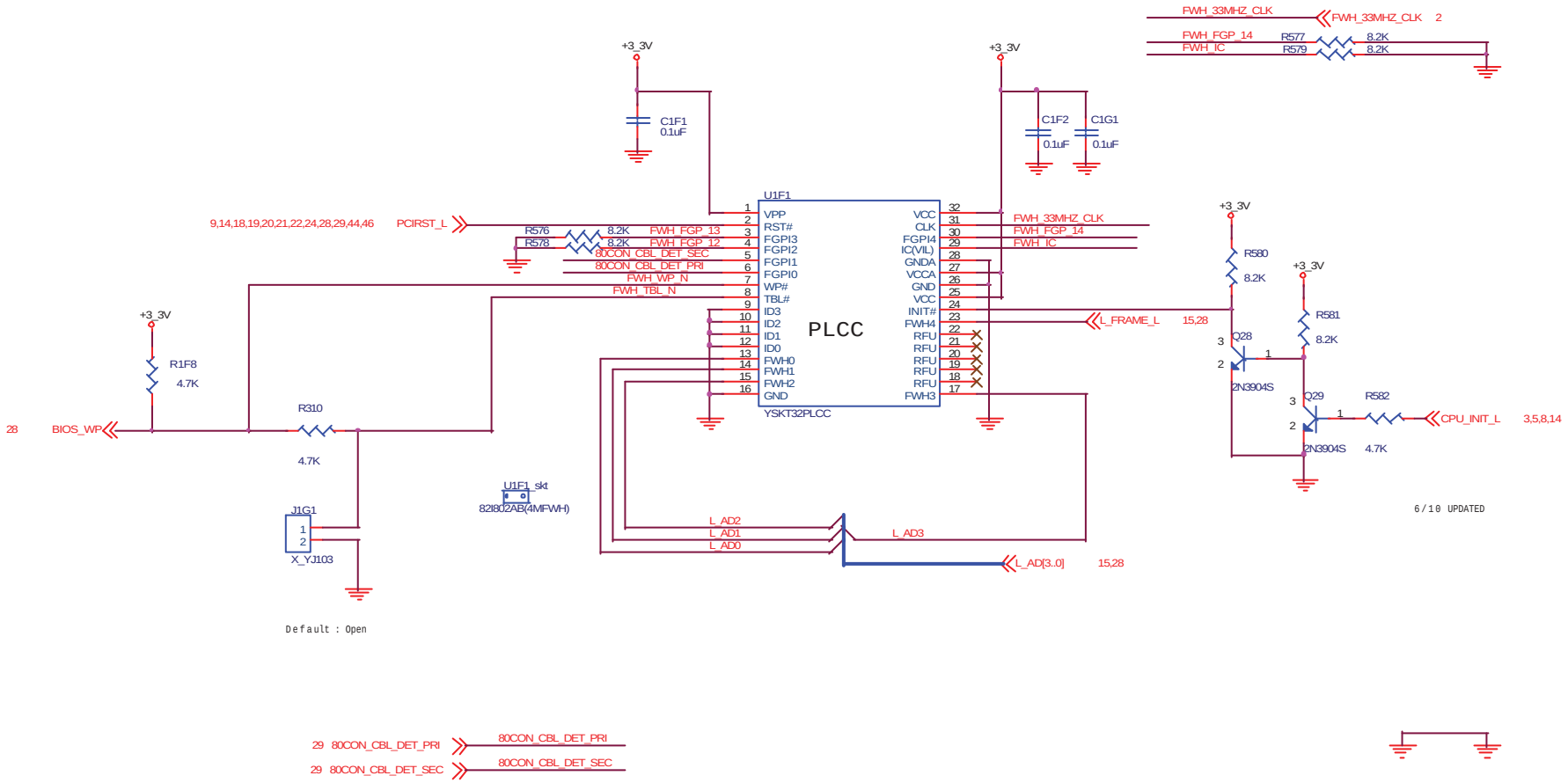

MS-6508-00B
0502_1/01

Micro Star Restricted Secret

Title: FWH	Rev: 0D
Document Number	
MICRO-STAR INT'L CO.,LTD. No. 69, Li-De St, Jung-He City, Taipei Hsien, Taiwan http://www.msi.com.tw	Last Revision Date: Tuesday, May 22, 2001
	Sheet 17 of 56

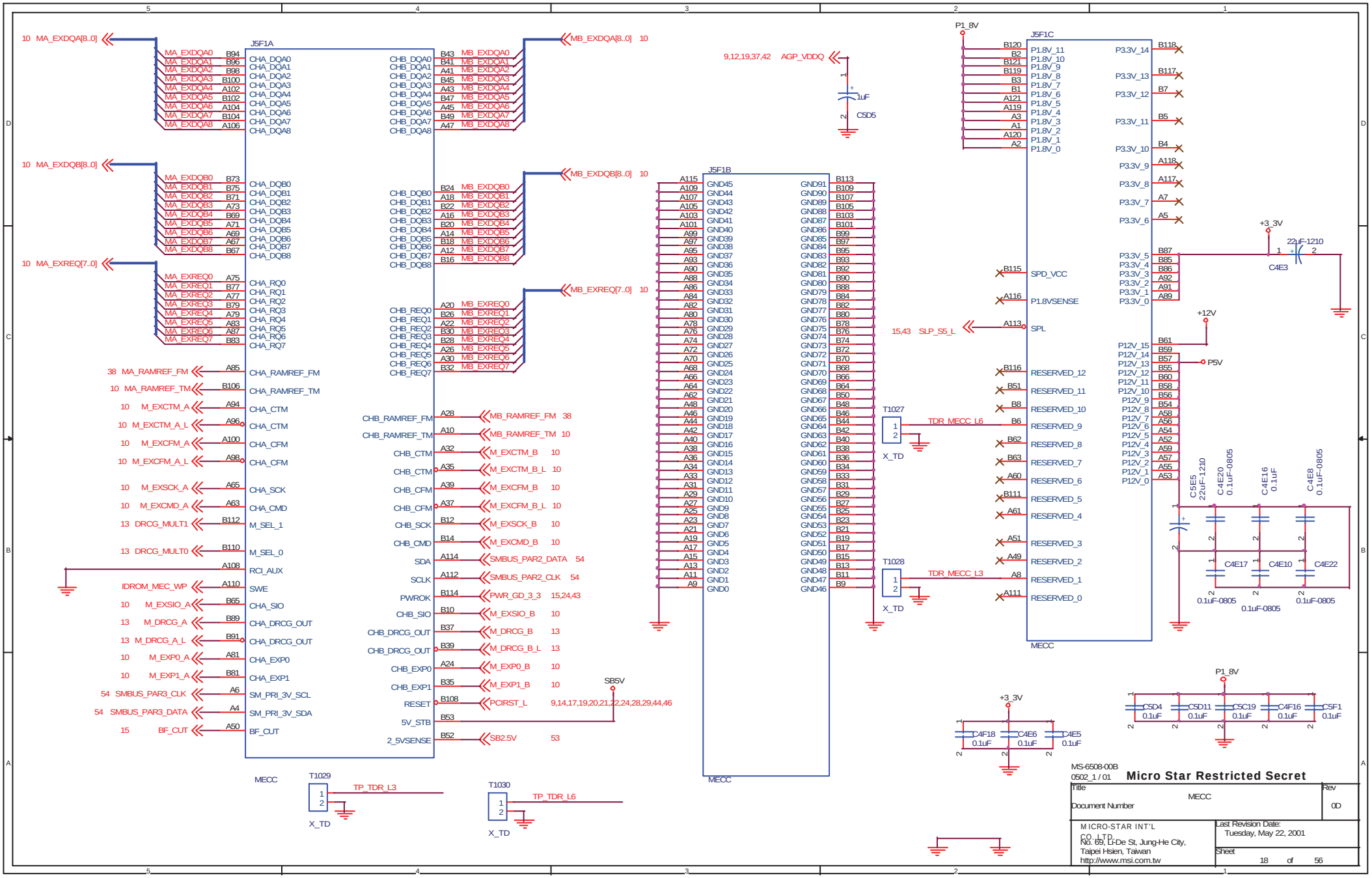
J5F1A
J5F1B
J5F1C
MECC
10 MA_EXDQA[8..0]
10 MA_EXDQB[8..0]
10 MA_EXREQ[7..0]
MB_EXDQA[8..0] 10
MB_EXDQB[8..0] 10
MB_EXREQ[7..0] 10
9,12,19,37,42 AGP_VDDQ
1uF
C5D5
P1_8V
+3_3V
22uF-1210
C4E3
+12V
P5V
15,43 SLP_S5_L
T1027
TDR_MECC_L6
X_TD
T1028
TDR_MECC_L3
T1029
TP_TDR_L3
T1030
TP_TDR_L6
SB5V
38 MA_RAMREF_FM
10 MA_RAMREF_TM
10 M_EXCTM_A
10 M_EXCTM_A_L
10 M_EXCFM_A
10 M_EXCFM_A_L
10 M_EXSCK_A
10 M_EXCMD_A
13 DRCG_MULT1
13 DRCG_MULT0
IDROM_MEC_WP
10 M_EXSIO_A
13 M_DRCG_A
13 M_DRCG_A_L
10 M_EXP0_A
10 M_EXP1_A
54 SMBUS_PAR3_CLK
54 SMBUS_PAR3_DATA
15 BF_CUT
MB_RAMREF_FM 38
MB_RAMREF_TM 10
M_EXCTM_B 10
M_EXCTM_B_L 10
M_EXCFM_B 10
M_EXCFM_B_L 10
M_EXSCK_B 10
M_EXCMD_B 10
SMBUS_PAR2_DATA 54
SMBUS_PAR2_CLK 54
PWR_GD_3_3 15,24,43
M_EXSIO_B 10
M_DRCG_B 13
M_DRCG_B_L 13
M_EXP0_B 10
M_EXP1_B 10
PCIRST_L 9,14,17,19,20,21,22,24,28,29,44,46
SB2.5V 53
C5E5 22uF-1210
C4E20 0.1uF-0805
C4E16 0.1uF
C4E8 0.1uF-0805
C4E17 0.1uF-0805
C4E10 0.1uF-0805
C4E22 0.1uF-0805
C4F18 0.1uF
C4E6 0.1uF
C4E5 0.1uF
C5D4 0.1uF
C5D11 0.1uF
C5C19 0.1uF
C4F16 0.1uF
C5F1 0.1uF
MS-6508-00B
0502_1 / 01
Micro Star Restricted Secret
Title
MECC
Rev
0D
Document Number
MICRO-STAR INT'L CO.,LTD.
No. 69, Li-De St, Jung-He City,
Taipei Hsien, Taiwan
http://www.msi.com.tw
Last Revision Date:
Tuesday, May 22, 2001
Sheet
18 of 56

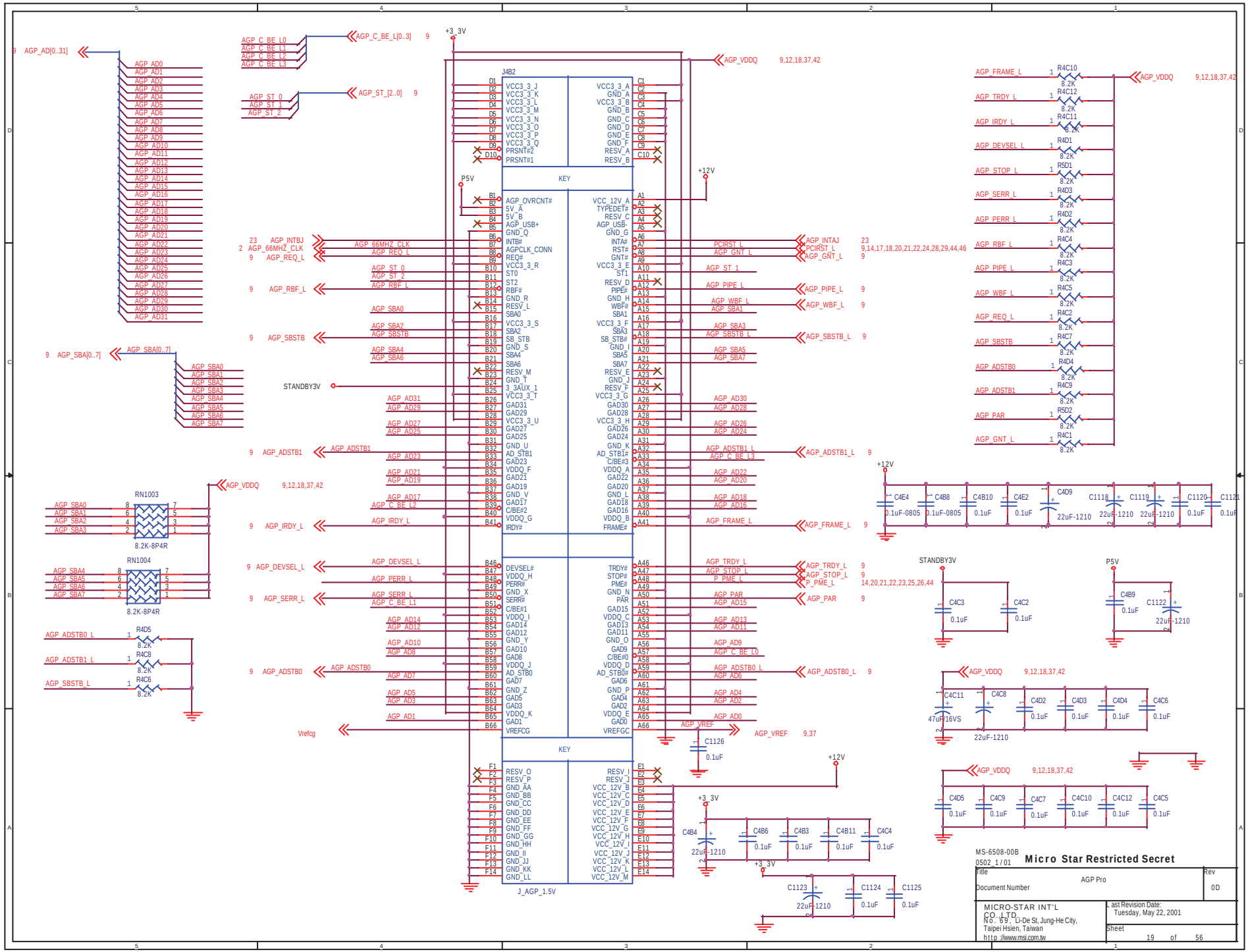
J4B2
J_AGP_1.5V
KEY
KEY
RN1003
8.2K-8P4R
RN1004
8.2K-8P4R
+3_3V
+12V
P5V
STANDBY3V
AGP_VDDQ 9,12,18,37,42
AGP_VREF 9,37
Vrefcg
MS-6508-00B
0502_1/01
Micro Star Restricted Secret
Title
AGP Pro
Document Number
Rev
0D
MICRO-STAR INT'L CO., LTD.
No. 69, Li-De St, Jung-He City, Taipei Hsien, Taiwan
http://www.msi.com.tw
Last Revision Date:
Tuesday, May 22, 2001
Sheet
19 of 56

PCI Connector 1

IDSEL: AD<25>
INTA#: PIRQ_B_L
INTB#: PIRQ_A_L
INTC#: PIRQ_C_L
INTD#: PIRQ_D_L

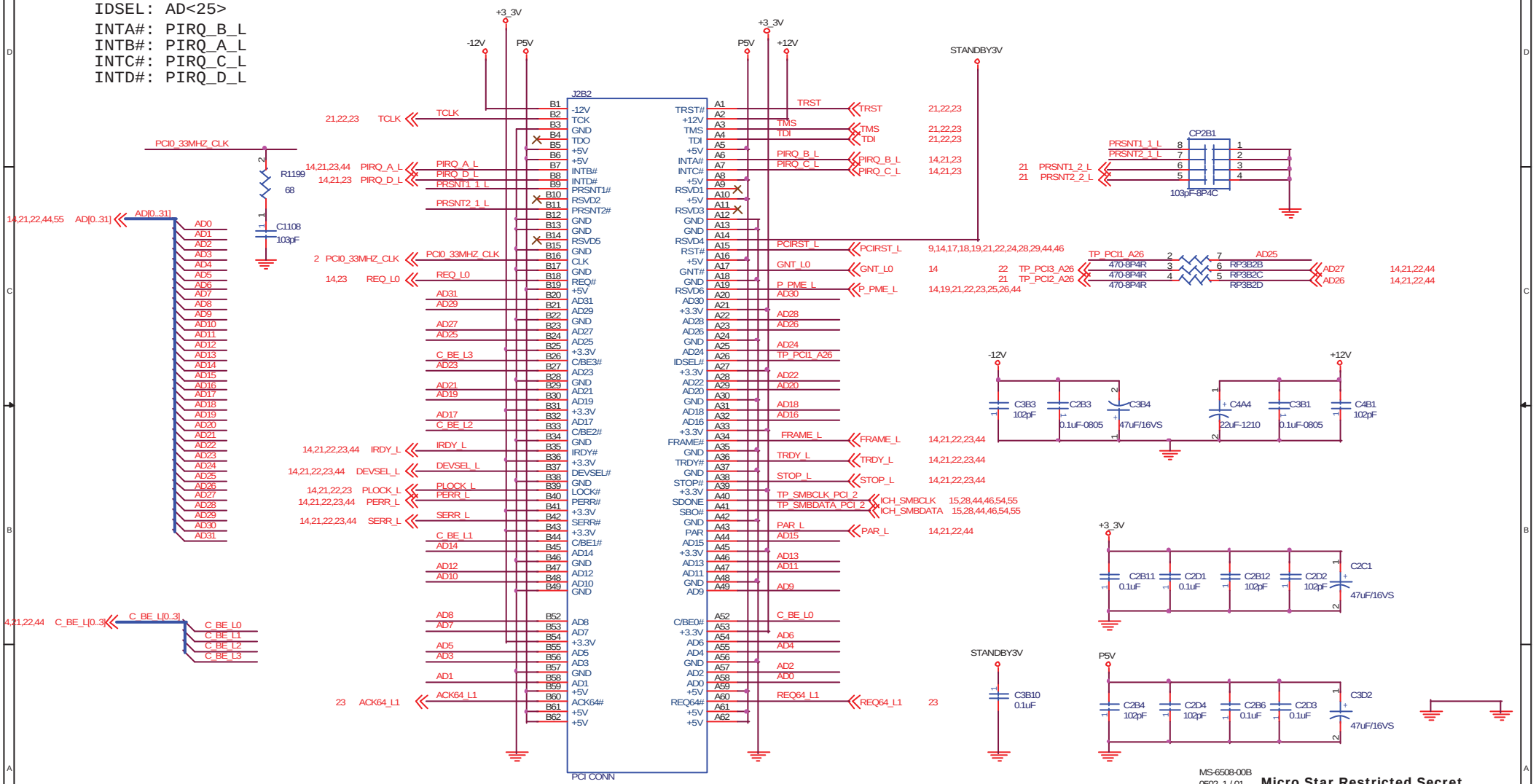

MS-6508-00B
0502_1 / 01

Micro Star Restricted Secret

Title	PCI 1
Rev	0D
Document Number	
MICRO-STAR INT'L CO., LTD. No. 69, Li-De St, Jung-He City, Taipei Hsien, Taiwan http://www.msi.com.tw	Last Revision Date: Tuesday, May 22, 2001
	Sheet 20 of 56

PCI Connector 2

IDSEL: AD<26>
INTA#: PIRQ_C_L
INTB#: PIRQ_D_L
INTC#: PIRQ_A_L
INTD#: PIRQ_B_L

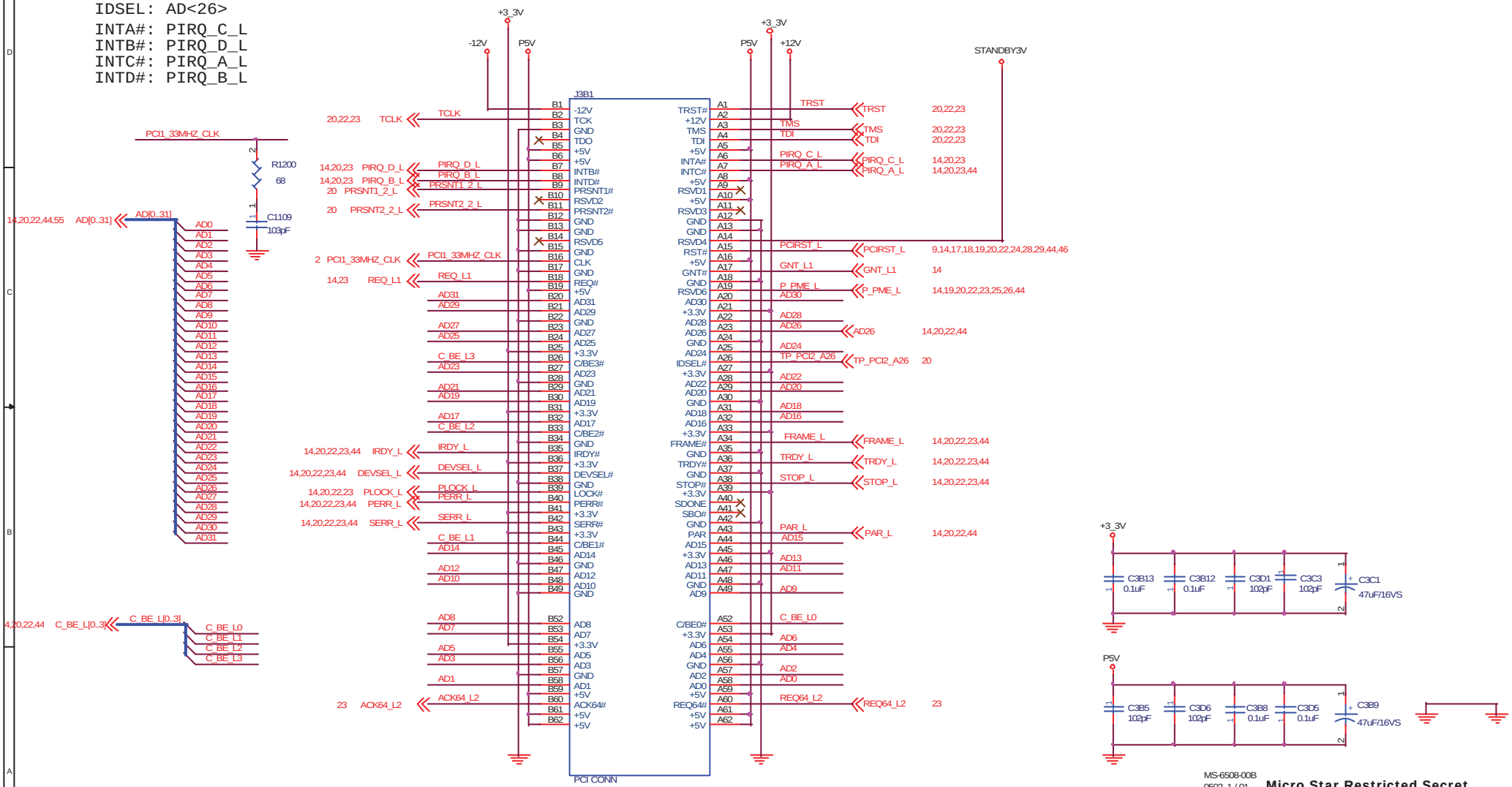

MS-6508-00B
0502_1 / 01

Micro Star Restricted Secret

Title	PCI 2
Document Number	
Rev	0D
MICRO-STAR INT'L CO., LTD. No. 69, Li-De St, Jung-He City, Taipei Hsien, Taiwan http://www.msi.com.tw	Last Revision Date: Tuesday, May 22, 2001
Sheet	21 of 56

PCI Connector 3

IDSEL: AD<27>
INTA#: PIRQ_F_L
INTB#: PIRQ_E_L
INTC#: PIRQ_G_L
INTD#: PIRQ_H_L

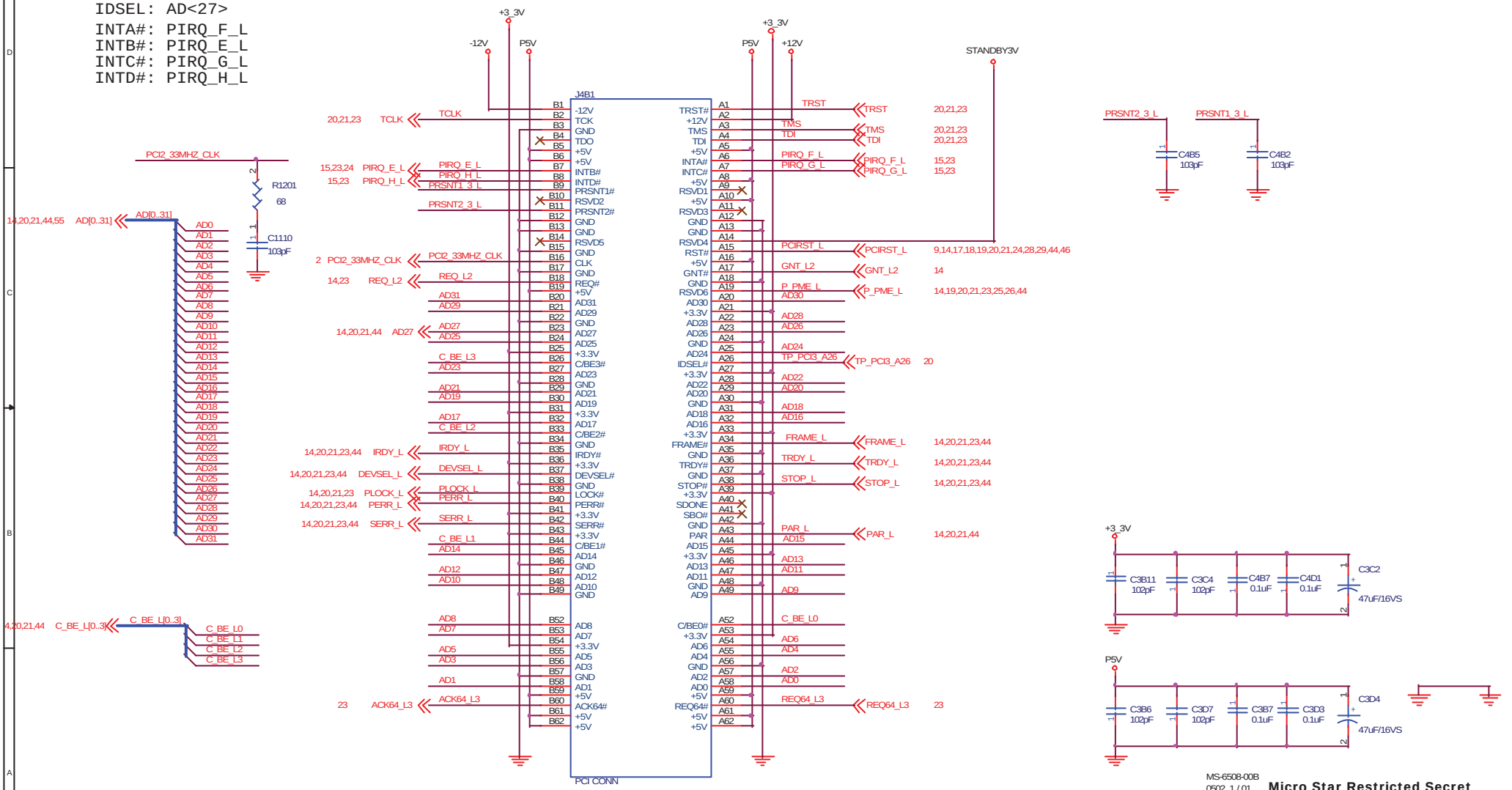

MS-6508-00B
0502_1 / 01

Micro Star Restricted Secret

Title	PCI 3
Rev	0D
Document Number	
MICRO-STAR INT'L CO., LTD. No. 69, Li-De St, Jung-He City, Taipei Hsien, Taiwan http://www.msi.com.tw	Last Revision Date: Tuesday, May 22, 2001
	Sheet 22 of 56

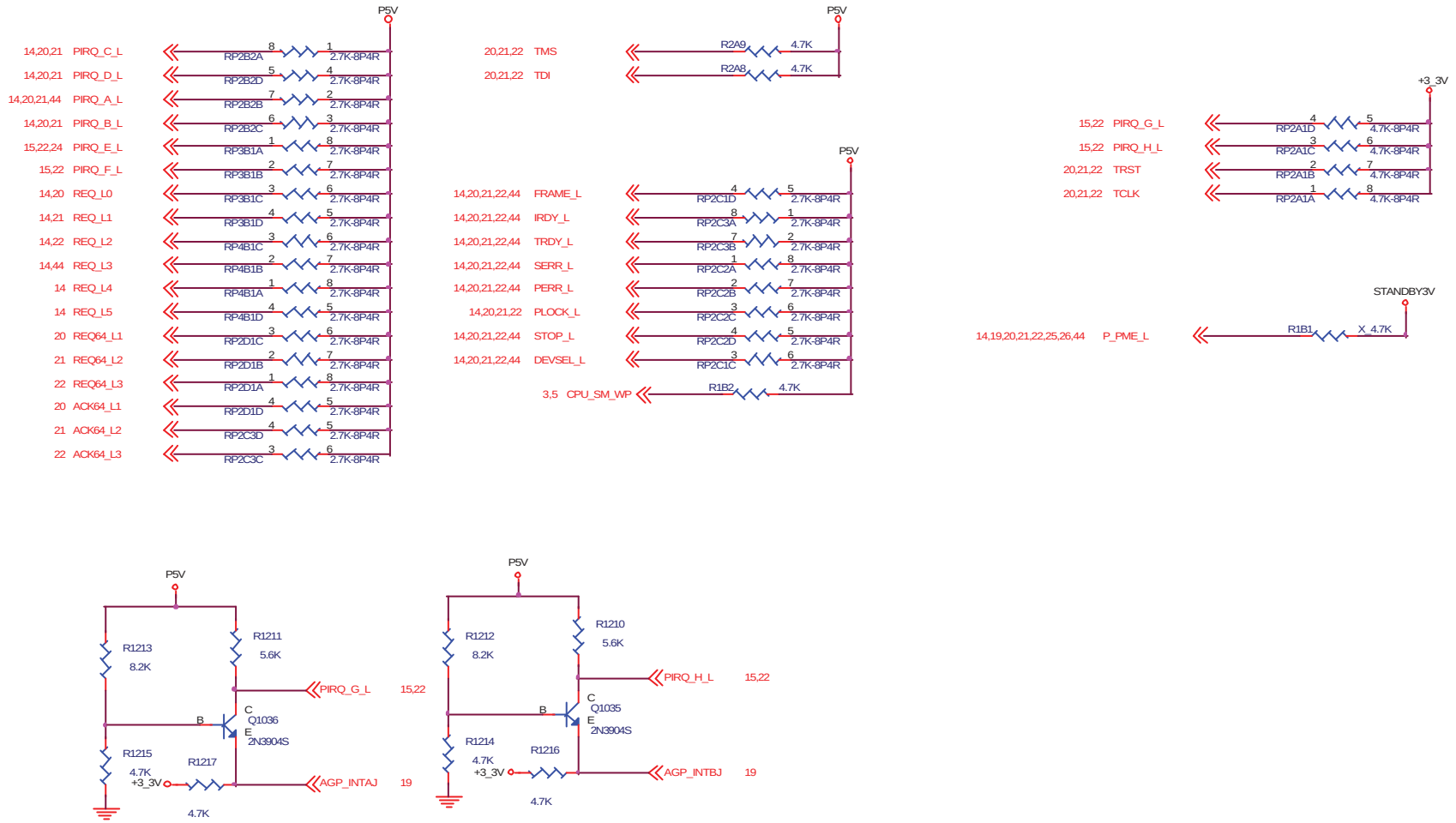

MS-6508-00B
0502_1 / 01

Micro Star Restricted Secret

Title	PCI 33 Termination	Rev
Document Number		0D
MICRO-STAR INT'L CO.,LTD. No. 69, Li-De St, Jung-He City, Taipei Hsien, Taiwan http://www.msi.com.tw		Last Revision Date: Tuesday, May 08, 2001
		Sheet 23 of 56

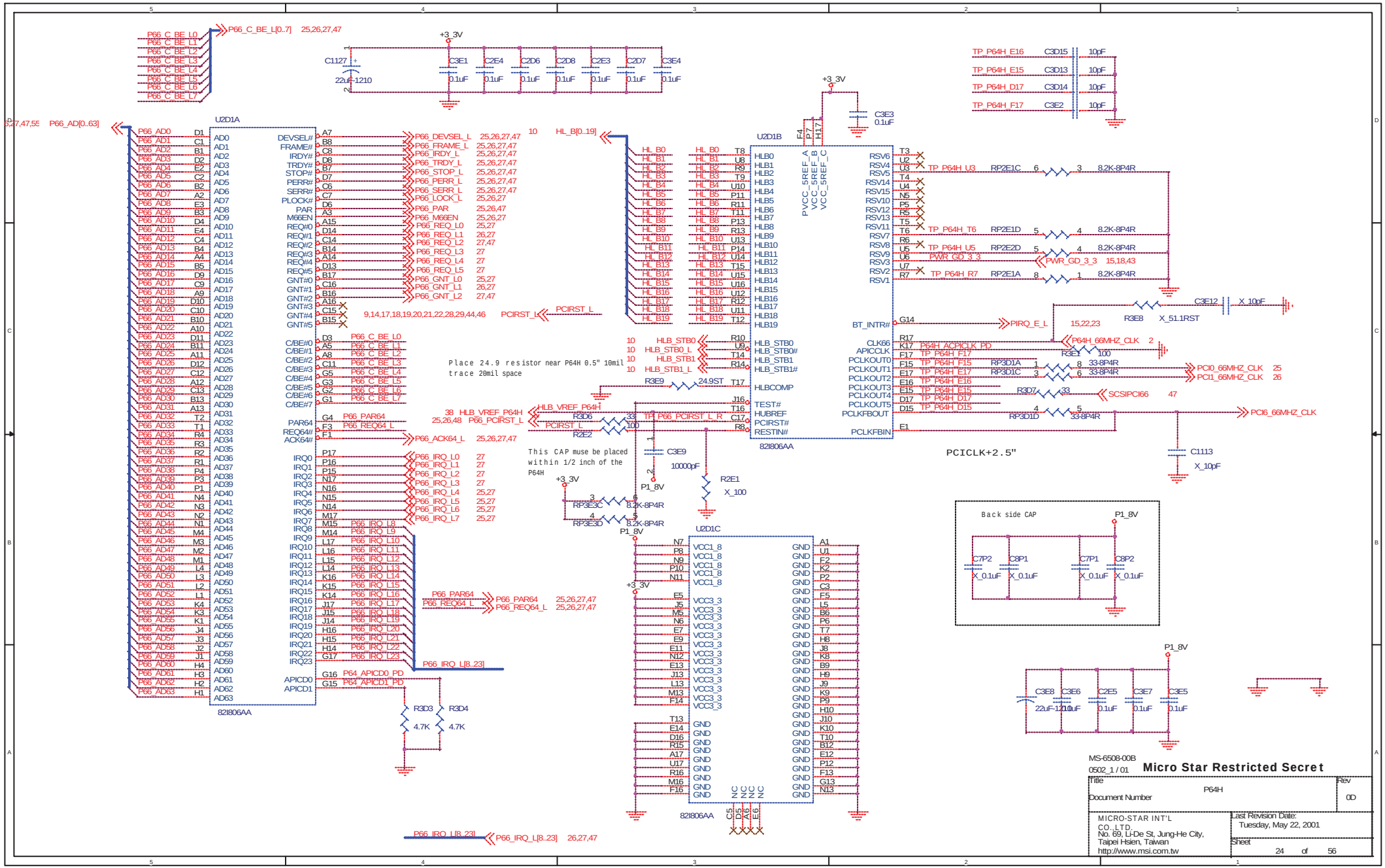
U2D1A
82I806AA
U2D1B
82I806AA
U2D1C
82I806AA
Place 24.9 resistor near P64H 0.5" 10mil trace 20mil space
This CAP muse be placed within 1/2 inch of the P64H
PCICLK+2.5"
Back side CAP
MS-6508-00B
0502_1 / 01
Micro Star Restricted Secret
Title
P64H
Rev
0D
Document Number
MICRO-STAR INT'L CO.,LTD.
No. 69, Li-De St, Jung-He City, Taipei Hsien, Taiwan
http://www.msi.com.tw
Last Revision Date:
Tuesday, May 22, 2001
Sheet
24 of 56

PCI 64 SLOT2

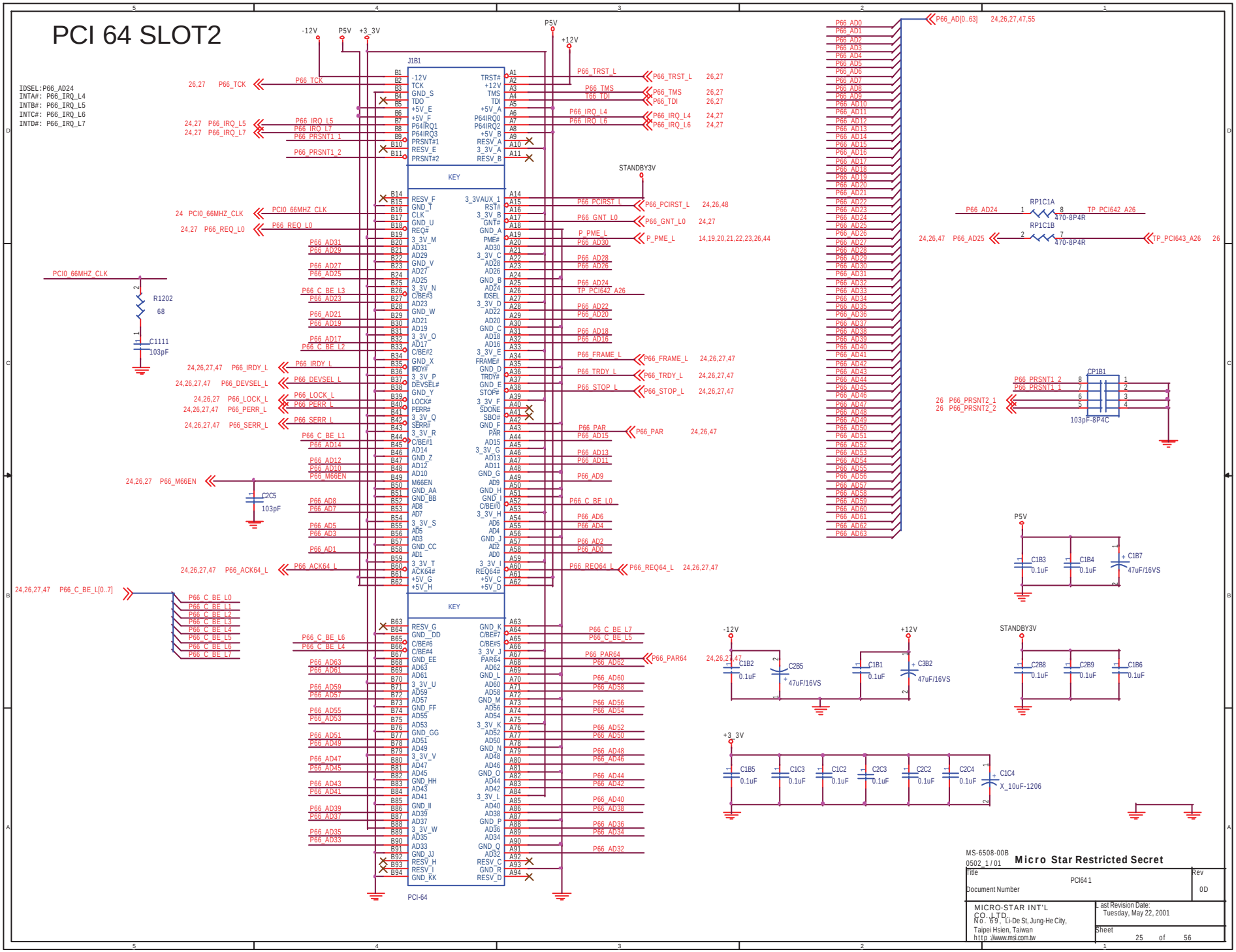
IDSEL:P66_AD24
INTA#: P66_IRQ_L4
INTB#: P66_IRQ_L5
INTC#: P66_IRQ_L6
INTD#: P66_IRQ_L7
J1B1
KEY
KEY
PCI-64
-12V
P5V
+3_3V
+12V
STANDBY3V
R1202
68
C1111
103pF
C2C5
103pF
RP1C1A
470-8P4R
RP1C1B
470-8P4R
CP1B1
103pF-8P4C
C1B3
0.1uF
C1B4
0.1uF
C1B7
47uF/16VS
C1B2
0.1uF
C2B5
47uF/16VS
C1B1
0.1uF
C3B2
47uF/16VS
C2B8
0.1uF
C2B9
0.1uF
C1B6
0.1uF
C1B5
0.1uF
C1C3
0.1uF
C1C2
0.1uF
C2C3
0.1uF
C2C2
0.1uF
C2C4
0.1uF
C1C4
X_10uF-1206
MS-6508-00B
0502_1/01
Micro Star Restricted Secret
Title
PCI64 1
Rev
0D
Document Number
MICRO-STAR INT'L CO.,LTD.
No. 69, Li-De St, Jung-He City,
Taipei Hsien, Taiwan
http://www.msi.com.tw
Last Revision Date:
Tuesday, May 22, 2001
Sheet
25 of 56

PCI 64 SLOT2

IDSEL:P66_AD25
INTA#: P66_IRQ_L8
INTB#: P66_IRQ_L9
INTC#: P66_IRQ_L10
INTD#: P66_IRQ_L11

J2B1

Pin	Signal	Pin	Signal
B1	-12V	A1	TRST#
B2	TCK	A2	+12V
B3	GND_S	A3	TMS
B4	TDO	A4	TDI
B5	+5V_E	A5	+5V_A
B6	+5V_F	A6	P64IRQ0
B7	P64IRQ1	A7	P64IRQ2
B8	P64IRQ3	A8	+5V_B
B9	PRSNT#1	A9	RESV_A
B10	RESV_E	A10	3_3V_A
B11	PRSNT#2	A11	RESV_B
	KEY		
B14	RESV_F	A14	3_3VAUX_1
B15	GND_T	A15	RST#
B16	CLK	A16	3_3V_B
B17	GND_U	A17	GNT#
B18	REQ#	A18	GND_A
B19	3_3V_M	A19	PME#
B20	AD31	A20	AD30
B21	AD29	A21	3_3V_C
B22	GND_V	A22	AD28
B23	AD27	A23	AD26
B24	AD25	A24	GND_B
B25	3_3V_N	A25	AD24
B26	C/BE#3	A26	IDSEL
B27	AD23	A27	3_3V_D
B28	GND_W	A28	AD22
B29	AD21	A29	AD20
B30	AD19	A30	GND_C
B31	3_3V_O	A31	AD18
B32	AD17	A32	AD16
B33	C/BE#2	A33	3_3V_E
B34	GND_X	A34	FRAME#
B35	IRDY#	A35	GND_D
B36	3_3V_P	A36	TRDY#
B37	DEVSEL#	A37	GND_E
B38	GND_Y	A38	STOP#
B39	LOCK#	A39	3_3V_F
B40	PERR#	A40	SDONE
B41	3_3V_Q	A41	SBO#
B42	SERR#	A42	GND_F
B43	3_3V_R	A43	PAR
B44	C/BE#1	A44	AD15
B45	AD14	A45	3_3V_G
B46	GND_Z	A46	AD13
B47	AD12	A47	AD11
B48	AD10	A48	GND_G
B49	M66EN	A49	AD9
B50	GND_AA	A50	GND_H
B51	GND_BB	A51	GND_I
B52	AD8	A52	C/BE#0
B53	AD7	A53	3_3V_H
B54	3_3V_S	A54	AD6
B55	AD5	A55	AD4
B56	AD3	A56	GND_J
B57	GND_CC	A57	AD2
B58	AD1	A58	AD0
B59	3_3V_T	A59	3_3V_I
B60	ACK64#	A60	REQ64#
B61	+5V_G	A61	+5V_C
B62	+5V_H	A62	+5V_D
	KEY		
B63	RESV_G	A63	GND_K
B64	GND_DD	A64	C/BE#7
B65	C/BE#6	A65	C/BE#5
B66	C/BE#4	A66	3_3V_J
B67	GND_EE	A67	PAR64
B68	AD63	A68	AD62
B69	AD61	A69	GND_L
B70	3_3V_U	A70	AD60
B71	AD59	A71	AD58
B72	AD57	A72	GND_M
B73	GND_FF	A73	AD56
B74	AD55	A74	AD54
B75	AD53	A75	3_3V_K
B76	GND_GG	A76	AD52
B77	AD51	A77	AD50
B78	AD49	A78	GND_N
B79	3_3V_V	A79	AD48
B80	AD47	A80	AD46
B81	AD45	A81	GND_O
B82	GND_HH	A82	AD44
B83	AD43	A83	AD42
B84	AD41	A84	3_3V_L
B85	GND_II	A85	AD40
B86	AD39	A86	AD38
B87	AD37	A87	GND_P
B88	3_3V_W	A88	AD36
B89	AD35	A89	AD34
B90	AD33	A90	GND_Q
B91	GND_JJ	A91	AD32
B92	RESV_H	A92	RESV_C
B93	RESV_I	A93	GND_R
B94	GND_KK	A94	RESV_D

PCI-64

-12V P5V +3_3V P5V +12V STANDBY3V

25,27 P66_TCK — P66_TCK
24,27 P66_IRQ_L9 — P66_IRQ_L9
24,27 P66_IRQ_L11 — P66_IRQ_L11
25 P66_PRSNT2_1 — P66_PRSNT2_1
25 P66_PRSNT2_2 — P66_PRSNT2_2
P66_TRST_L — P66_TRST_L 25,27
P66_TMS — P66_TMS 25,27
T66_TDI — P66_TDI 25,27
P66_IRQ_L8 — P66_IRQ_L8 24,27
P66_IRQ_L10 — P66_IRQ_L10 24,27

PCI1_66MHZ_CLK
R1203 68
C1112 103pF
24 PCI1_66MHZ_CLK — PCI1_66MHZ_CLK
24,27 P66_REQ_L1 — P66_REQ_L1
P66_PCIRST_L — P66_PCIRST_L 24,25,48
P66_GNT_L1 — P66_GNT_L1 24,27
P_PME_L — P_PME_L 14,19,20,21,22,23,25,44
P66_AD31 / P66_AD29
P66_AD27 / P66_AD25
24,25,47 P66_AD25
P66_C_BE_L3 / P66_AD23
P66_AD21 / P66_AD19
P66_AD17 / P66_C_BE_L2
P66_AD30
P66_AD28 / P66_AD26
P66_AD24 / TP_PCI643_A26 — TP_PCI643_A26 25
P66_AD22 / P66_AD20
P66_AD18 / P66_AD16
24,25,27,47 P66_IRDY_L — P66_IRDY_L
24,25,27,47 P66_DEVSEL_L — P66_DEVSEL_L
24,25,27 P66_LOCK_L — P66_LOCK_L
24,25,27,47 P66_PERR_L — P66_PERR_L
24,25,27,47 P66_SERR_L — P66_SERR_L
P66_FRAME_L — P66_FRAME_L 24,25,27,47
P66_TRDY_L — P66_TRDY_L 24,25,27,47
P66_STOP_L — P66_STOP_L 24,25,27,47
P66_PAR / P66_AD15 — P66_PAR 24,25,47
P66_C_BE_L1 / P66_AD14
P66_AD12 / P66_AD10 / P66_M66EN
P66_AD13 / P66_AD11
P66_AD9
24,25,27 P66_M66EN
C1C5 103pF
P66_AD8 / P66_AD7
P66_C_BE_L0
P66_AD5 / P66_AD3
P66_AD6 / P66_AD4
P66_AD1
P66_AD2 / P66_AD0
24,25,27,47 P66_ACK64_L — P66_ACK64_L
P66_REQ64_L — P66_REQ64_L 24,25,27,47

24,25,27,47 P66_C_BE_L[0..7]
P66_C_BE_L0 / P66_C_BE_L1 / P66_C_BE_L2 / P66_C_BE_L3 / P66_C_BE_L4 / P66_C_BE_L5 / P66_C_BE_L6 / P66_C_BE_L7

P66_C_BE_L7 / P66_C_BE_L5
P66_C_BE_L6 / P66_C_BE_L4
P66_PAR64 — P66_PAR64 24,25,27,47
P66_AD63 / P66_AD61
P66_AD60 / P66_AD58
P66_AD59 / P66_AD57
P66_AD56 / P66_AD54
P66_AD55 / P66_AD53
P66_AD52 / P66_AD50
P66_AD51 / P66_AD49
P66_AD48 / P66_AD46
P66_AD47 / P66_AD45
P66_AD44 / P66_AD42
P66_AD43 / P66_AD41
P66_AD40 / P66_AD38
P66_AD39 / P66_AD37
P66_AD36 / P66_AD34
P66_AD35 / P66_AD33
P66_AD32

P66_AD[0..63] 24,25,27,47,55
P66_AD0 … P66_AD63

P5V: C1D2 0.1uF, C2D5 0.1uF, C1D1 47uF/16VS

-12V: C2B1 0.1uF, C2A36 47uF/16VS

+12V: C2B2 0.1uF, C1A7 47uF/16VS

STANDBY3V: C2B10 0.1uF, C2B7 0.1uF, C1B8 0.1uF

+3_3V: C1E2 0.1uF, C2E1 0.1uF, C2E2 0.1uF, C1E1 0.1uF, C1D3 0.1uF, C1C1 0.1uF, C1D4 X_22uF-1210

MS-6508-00B
0502_1/01

Micro Star Restricted Secret

Title	PCI 64 2	Rev 0D
Document Number		
MICRO-STAR INT'L CO.,LTD. No. 69, Li-De St, Jung-He City, Taipei Hsien, Taiwan http://www.msi.com.tw	Last Revision Date: Tuesday, May 22, 2001	Sheet 26 of 56

MS-6508-00B
0502_1 / 01

Micro Star Restricted Secret

Title	PCI 66 Termination	Rev
Document Number		0D
MICRO-STAR INT'L CO., LTD. No. 69, Li-De St, Jung-He City, Taipei Hsien, Taiwan http://www.msi.com.tw	Last Revision Date: Tuesday, May 08, 2001	
	Sheet 27 of 56	

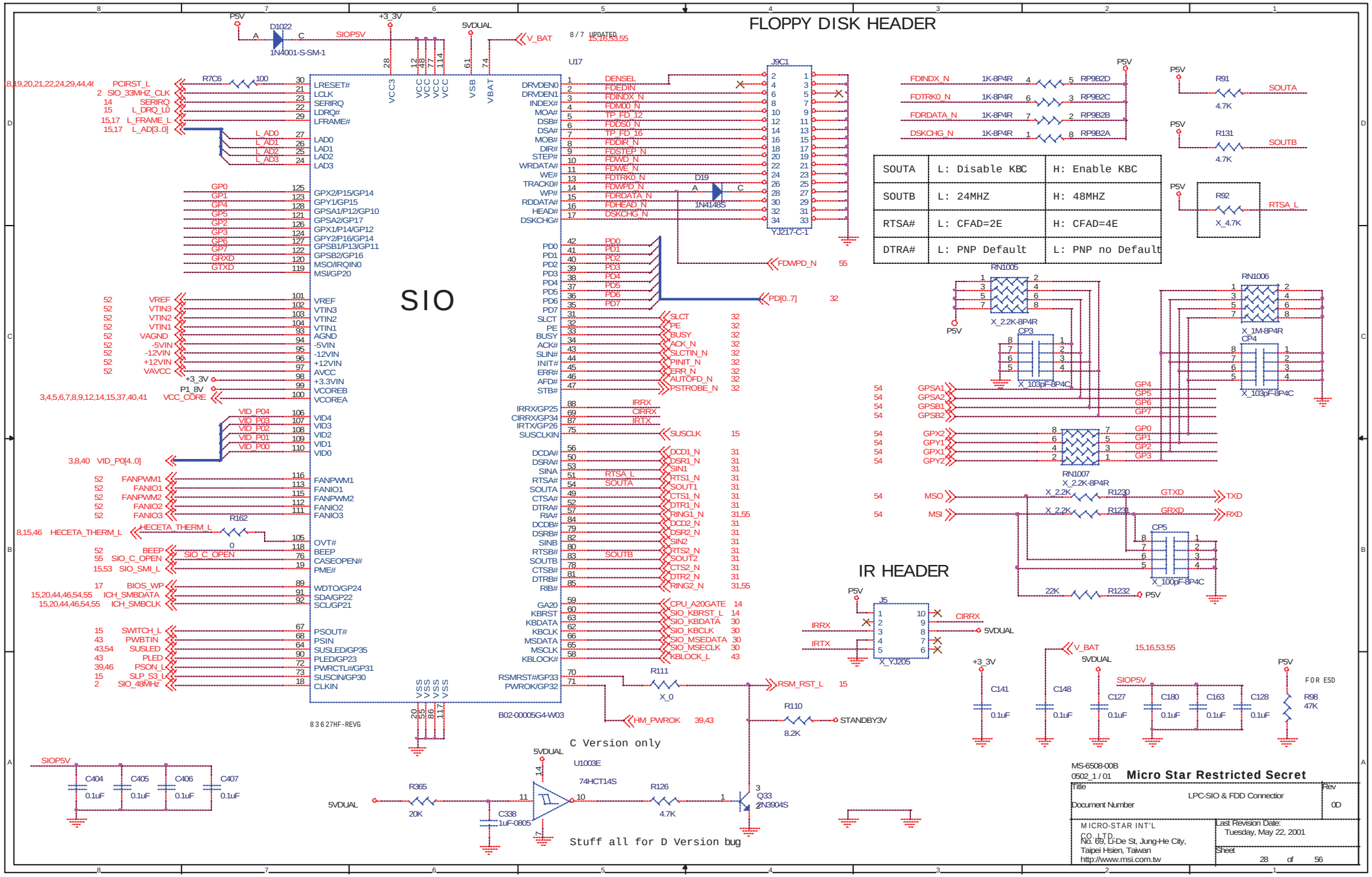

SOUTA	L: Disable KBC	H: Enable KBC
SOUTB	L: 24MHZ	H: 48MHZ
RTSA#	L: CFAD=2E	H: CFAD=4E
DTRA#	L: PNP Default	L: PNP no Default

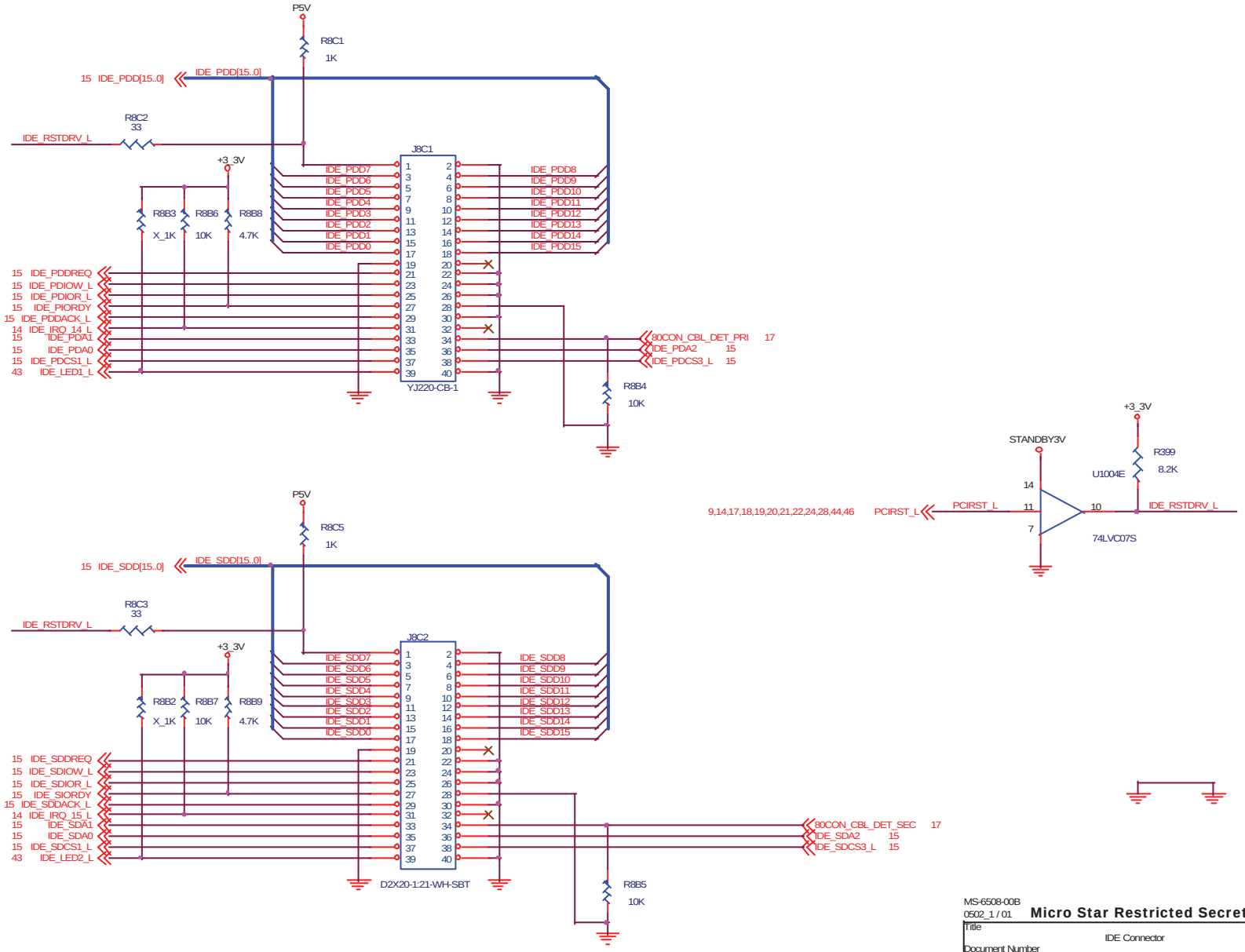

MS-6508-00B
0502_1 / 01

Micro Star Restricted Secret

Title	IDE Connector	Rev 0D
Document Number		
MICRO-STAR INT'L CO., LTD. No. 69, Li-De St, Jung-He City, Taipei Hsien, Taiwan http://www.msi.com.tw	Last Revision Date: Tuesday, May 22, 2001	Sheet 29 of 56

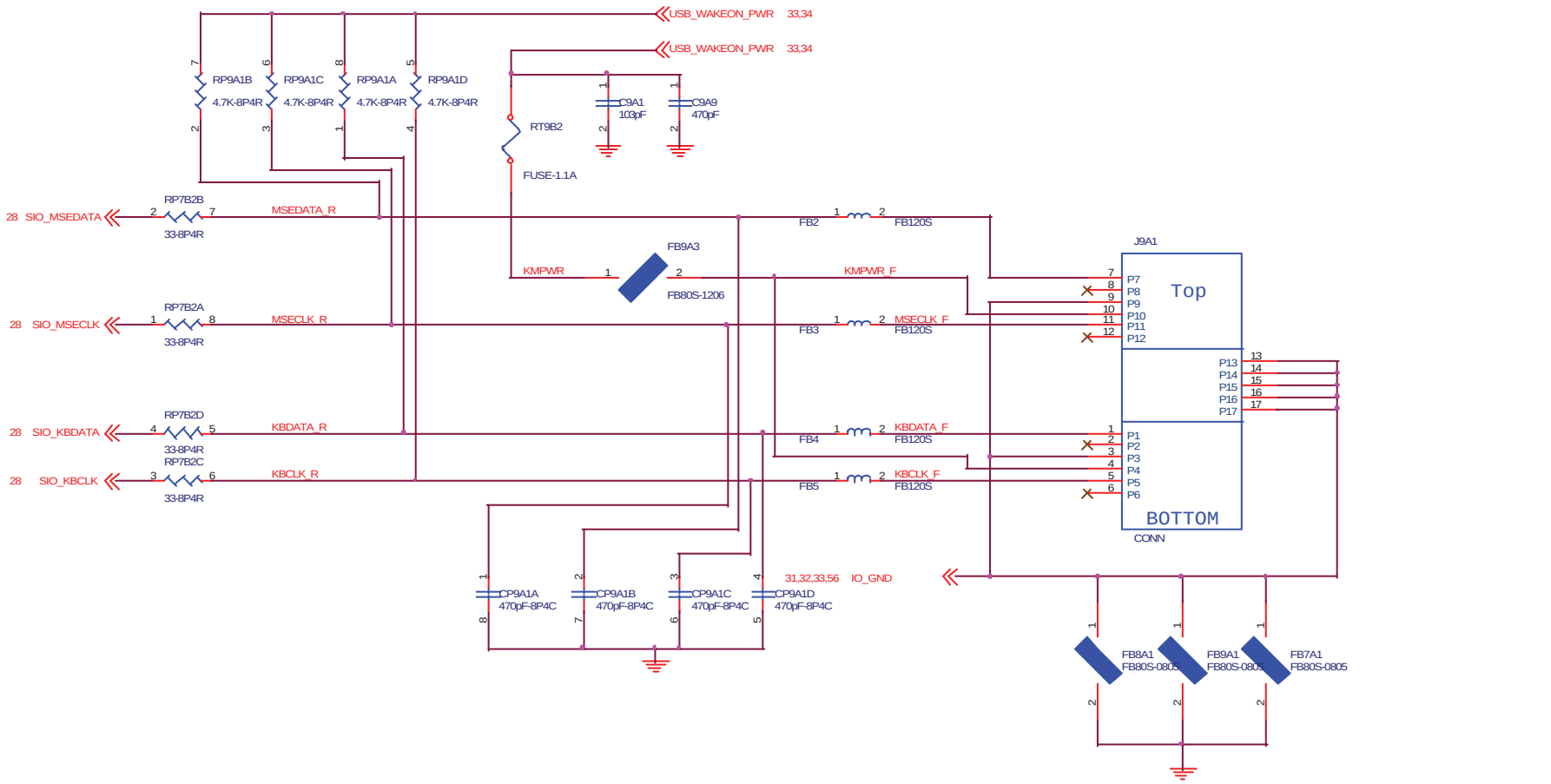

MS-6508-00B
0502_1 / 01

Micro Star Restricted Secret

Title	KB/MS Connector	Rev 0D
Document Number		
MICRO-STAR INT'L CO., LTD. No. 69, Li-De St, Jung-He City, Taipei Hsien, Taiwan http://www.msi.com.tw	Last Revision Date: Tuesday, May 22, 2001	
	Sheet 30 of 56	

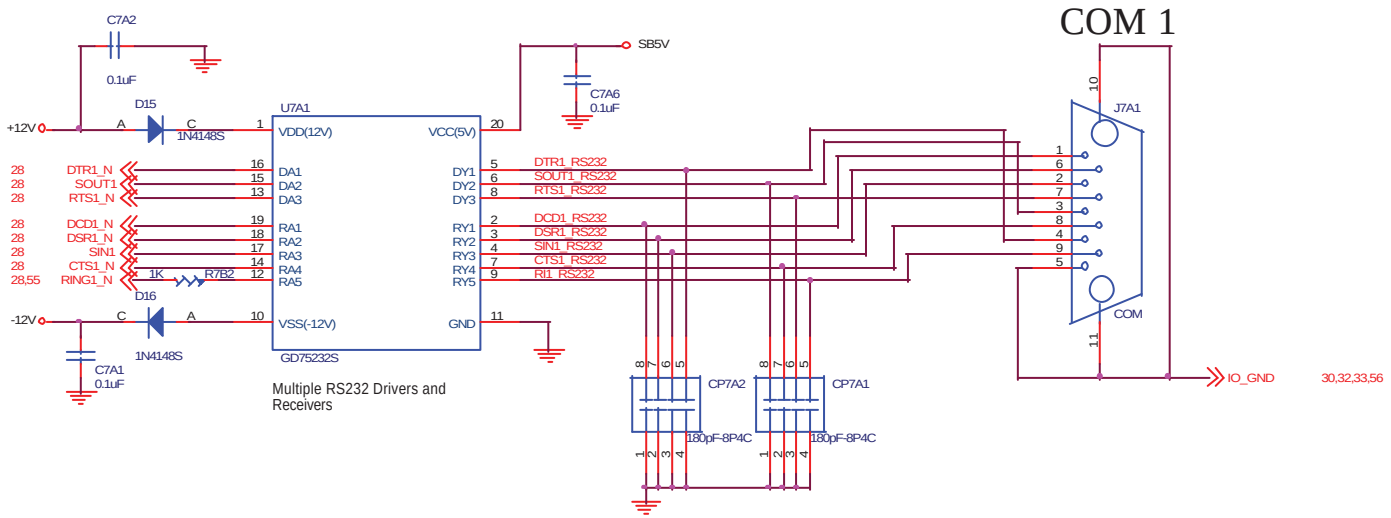

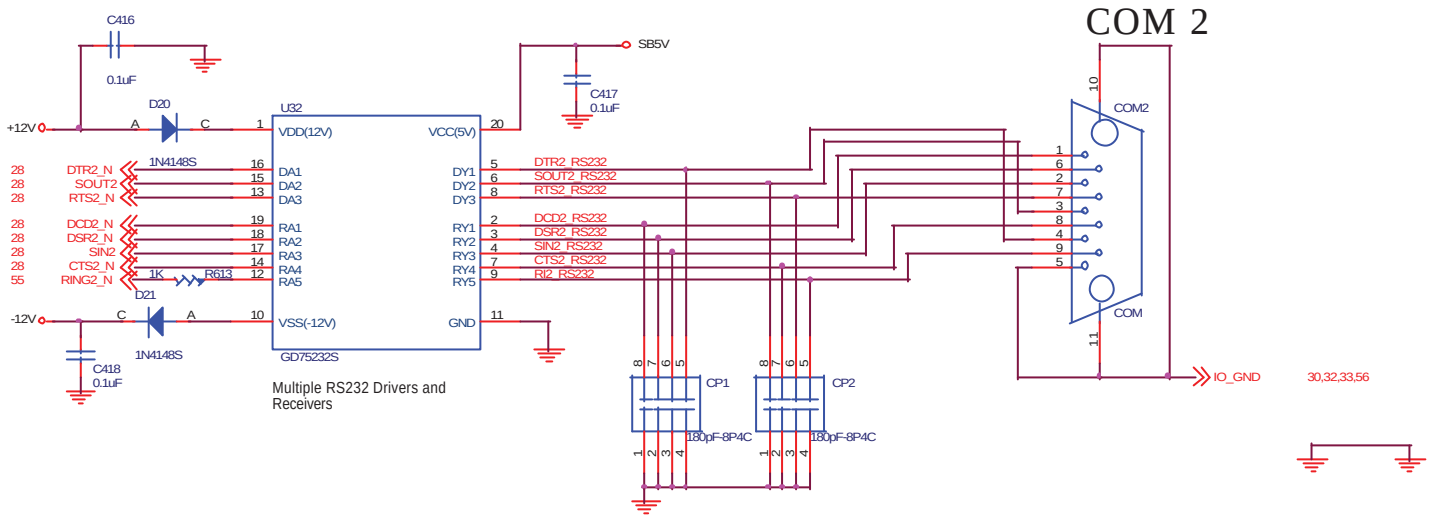

MS-6508-00B
0502_1 / 01

Micro Star Restricted Secret

Title	COM Port	Rev
Document Number		0D
MICRO-STAR INT'L CO., LTD. No. 69, Li-De St, Jung-He City, Taipei Hsien, Taiwan http://www.msi.com.tw		Last Revision Date: Tuesday, May 22, 2001
		Sheet 31 of 56

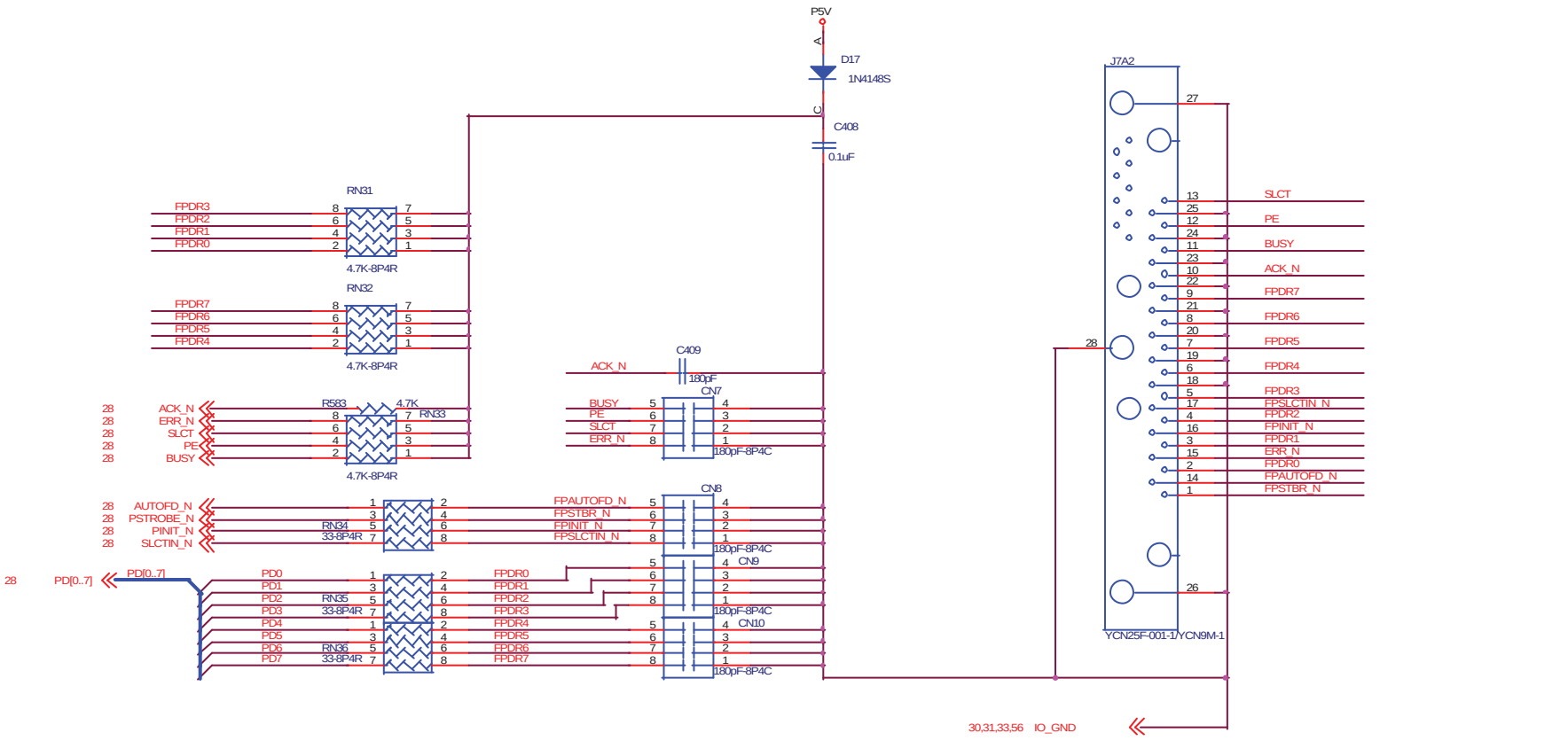

MS-6508-00B
0502_1 / 01

Micro Star Restricted Secret

Title	Printer Port	Rev
Document Number		0D
MICRO-STAR INT'L CO., LTD. No. 69, Li-De St, Jung-He City, Taipei Hsien, Taiwan http://www.msi.com.tw	Last Revision Date: Tuesday, May 22, 2001	
	Sheet 32 of 56	

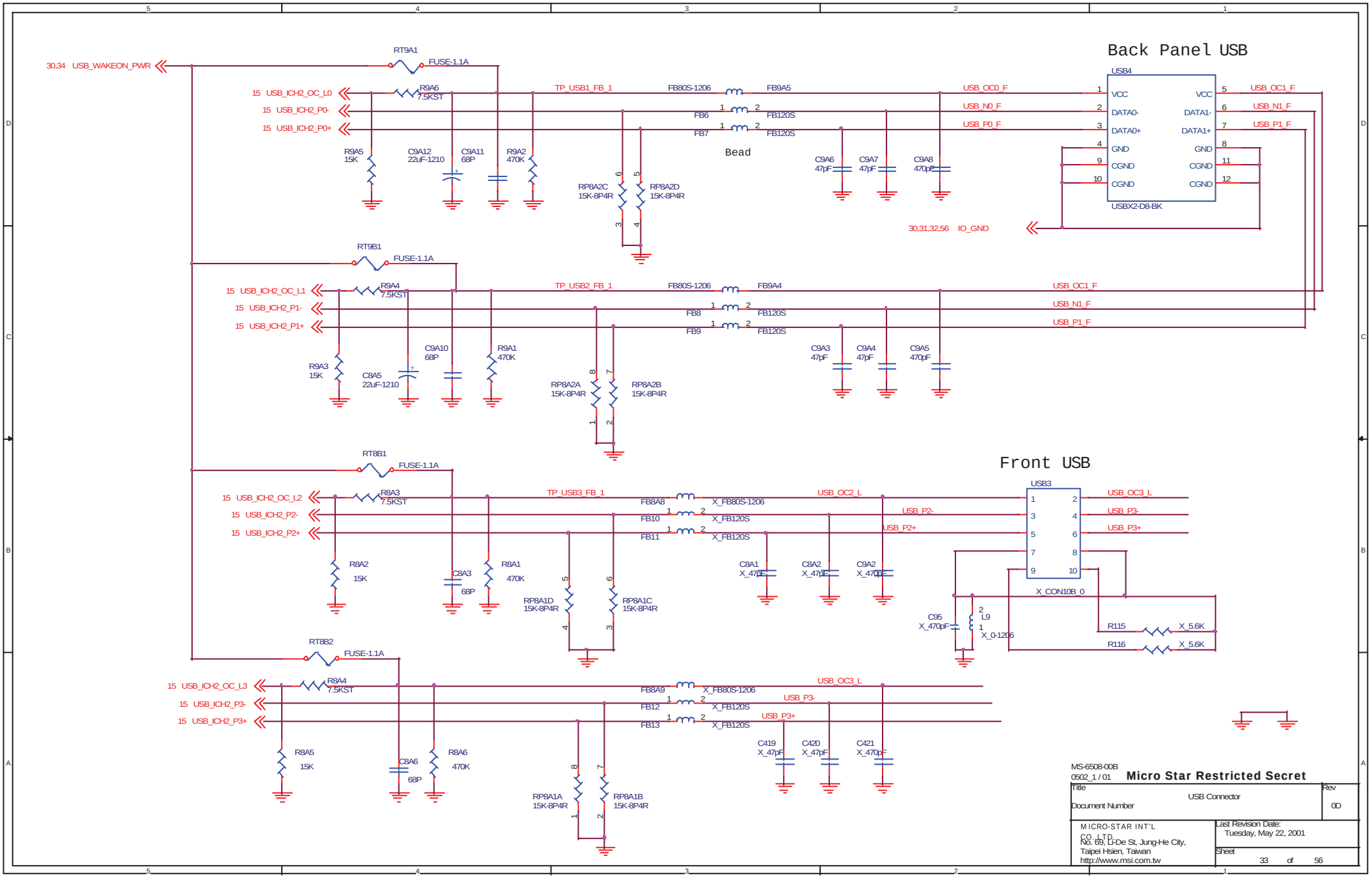
Back Panel USB
Front USB
30,34 USB_WAKEON_PWR
RT9A1
FUSE-1.1A
15 USB_ICH2_OC_L0
15 USB_ICH2_P0-
15 USB_ICH2_P0+
R9A6
7.5KST
TP_USB1_FB_1
FB80S-1206
FB9A5
FB6
FB7
FB120S
Bead
USB_OC0_F
USB_N0_F
USB_P0_F
USB4
VCC
DATA0-
DATA0+
GND
CGND
DATA1-
DATA1+
USB_OC1_F
USB_N1_F
USB_P1_F
USBX2-D8-BK
30,31,32,56 IO_GND
R9A5
15K
C9A12
22uF-1210
C9A11
68P
R9A2
470K
RP8A2C
15K-8P4R
RP8A2D
15K-8P4R
C9A6
47pF
C9A7
47pF
C9A8
470pF
RT9B1
FUSE-1.1A
15 USB_ICH2_OC_L1
15 USB_ICH2_P1-
15 USB_ICH2_P1+
R9A4
7.5KST
TP_USB2_FB_1
FB80S-1206
FB9A4
FB8
FB9
FB120S
R9A3
15K
C8A5
22uF-1210
C9A10
68P
R9A1
470K
RP8A2A
15K-8P4R
RP8A2B
15K-8P4R
C9A3
47pF
C9A4
47pF
C9A5
470pF
RT8B1
FUSE-1.1A
15 USB_ICH2_OC_L2
15 USB_ICH2_P2-
15 USB_ICH2_P2+
R8A3
7.5KST
TP_USB3_FB_1
FB8A8
X_FB80S-1206
FB10
FB11
X_FB120S
USB_OC2_L
USB_P2-
USB_P2+
USB3
USB_OC3_L
USB_P3-
USB_P3+
X_CON10B_0
R8A2
15K
C8A3
68P
R8A1
470K
RP8A1D
15K-8P4R
RP8A1C
15K-8P4R
C8A1
X_47pF
C8A2
X_47pF
C9A2
X_470pF
C95
X_470pF
L9
X_0-1206
R115
X_5.6K
R116
X_5.6K
RT8B2
FUSE-1.1A
15 USB_ICH2_OC_L3
15 USB_ICH2_P3-
15 USB_ICH2_P3+
R8A4
7.5KST
FB8A9
X_FB80S-1206
FB12
FB13
X_FB120S
USB_OC3_L
USB_P3-
USB_P3+
R8A5
15K
C8A6
68P
R8A6
470K
RP8A1A
15K-8P4R
RP8A1B
15K-8P4R
C419
X_47pF
C420
X_47pF
C421
X_470pF
MS-6508-00B
0502_1 / 01
Micro Star Restricted Secret
Title
USB Connector
Rev
0D
Document Number
MICRO-STAR INT'L CO., LTD.
No. 69, Li-De St, Jung-He City,
Taipei Hsien, Taiwan
http://www.msi.com.tw
Last Revision Date:
Tuesday, May 22, 2001
Sheet
33 of 56

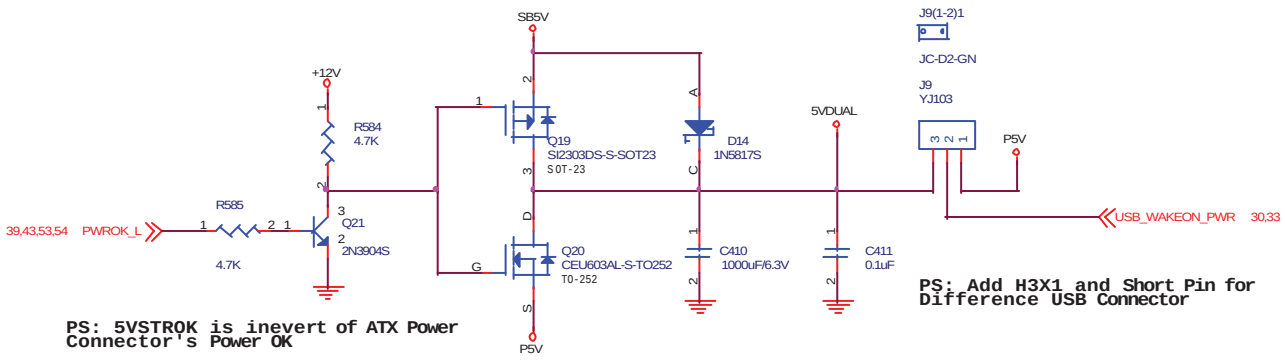

PS: 5VSTROK is inevert of ATX Power Connector's Power OK

PS: Add H3X1 and Short Pin for Difference USB Connector

MS-6508-00B
0502_1 / 01

Micro Star Restricted Secret

Title: Wake On Power	Rev: 0D
Document Number	
MICRO-STAR INT'L CO., LTD. No. 69, Li-De St, Jung-He City, Taipei Hsien, Taiwan http://www.msi.com.tw	Last Revision Date: Tuesday, May 22, 2001
	Sheet 34 of 56

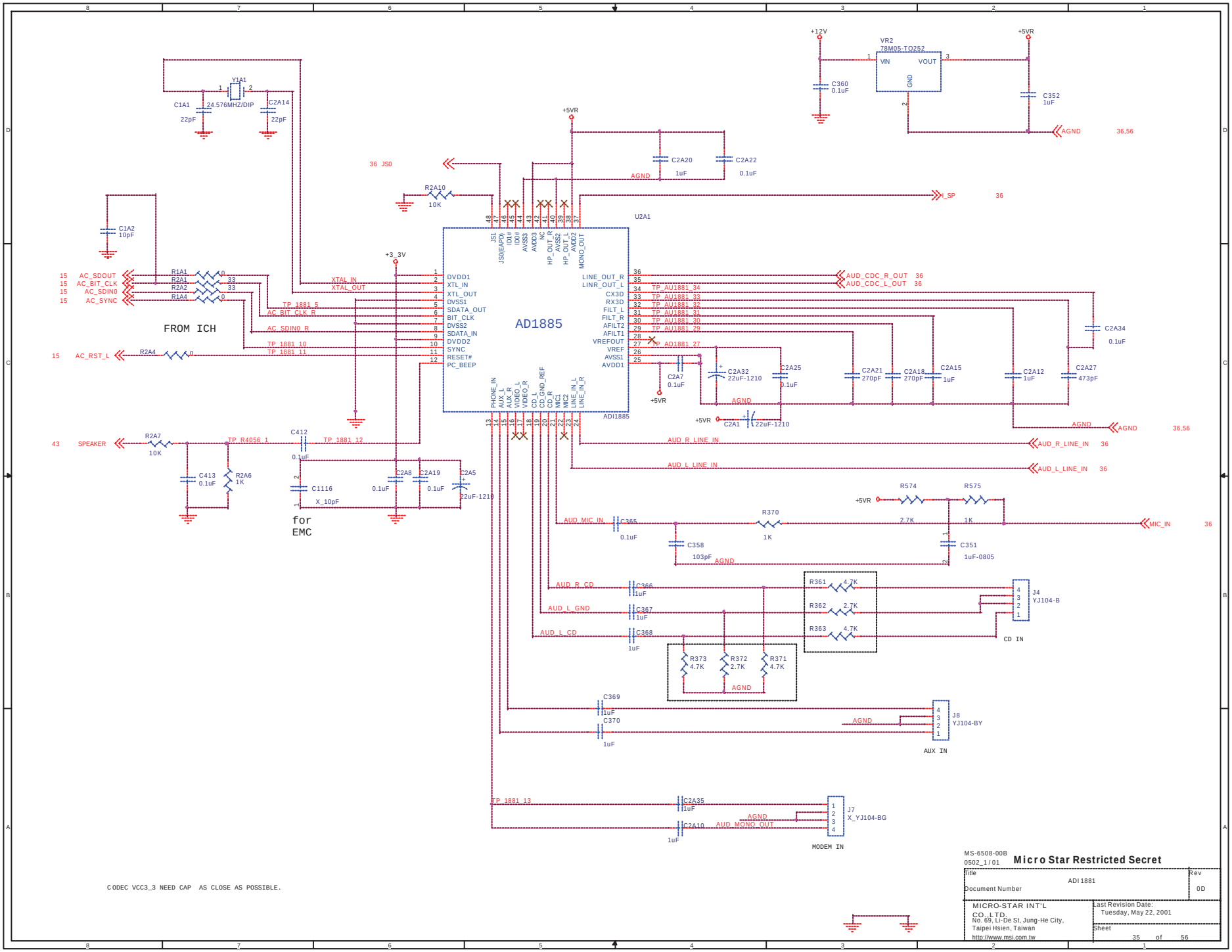

CODEC VCC3_3 NEED CAP AS CLOSE AS POSSIBLE.

MS-6508-00B
0502_1/01

Micro Star Restricted Secret

Title	ADI1881	Rev 0D
Document Number		
MICRO-STAR INT'L CO.,LTD. No. 69, Li-De St, Jung-He City, Taipei Hsien, Taiwan http://www.msi.com.tw	Last Revision Date: Tuesday, May 22, 2001	
	Sheet 35 of 56	

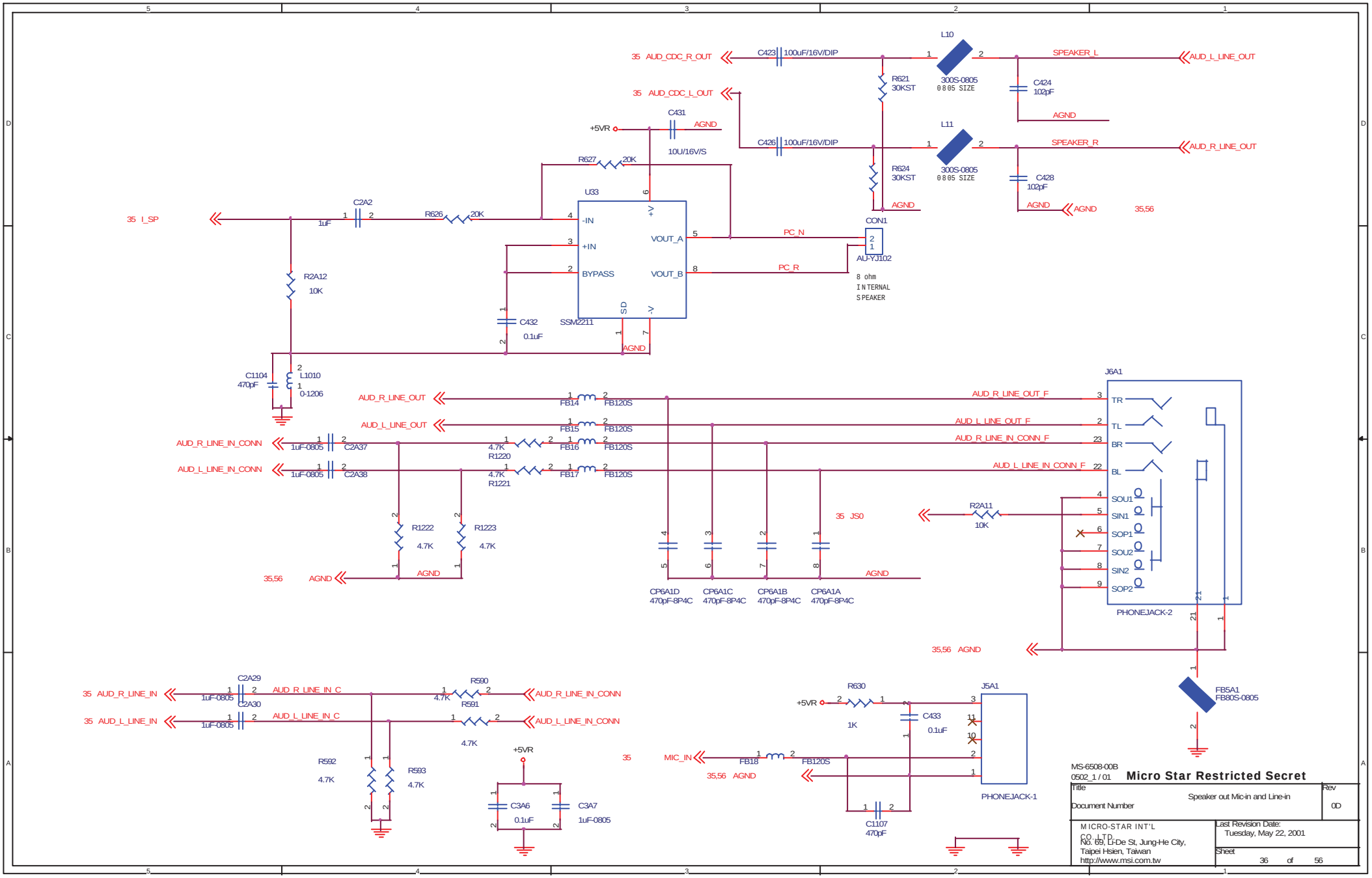
35 AUD_CDC_R_OUT
C423 100uF/16V/DIP
L10
300S-0805
0805 SIZE
SPEAKER_L
AUD_L_LINE_OUT
R621
30KST
C424
102pF
AGND
35 AUD_CDC_L_OUT
C431
10U/16V/S
+5VR
AGND
C426 100uF/16V/DIP
L11
SPEAKER_R
AUD_R_LINE_OUT
R624
30KST
C428
102pF
R627 20K
U33
SSM2211
-IN
+IN
BYPASS
VOUT_A
VOUT_B
+V
-V
SD
35 I_SP
C2A2
1uF
R626 20K
PC_N
PC_R
CON1
AU-YJ102
8 ohm
INTERNAL
SPEAKER
35,56
R2A12
10K
C432
0.1uF
C1104
470pF
L1010
0-1206
AUD_R_LINE_OUT
AUD_L_LINE_OUT
FB14
FB15
FB120S
AUD_R_LINE_IN_CONN
AUD_L_LINE_IN_CONN
1uF-0805
C2A37
C2A38
4.7K
R1220
R1221
FB16
FB17
R1222
R1223
4.7K
35,56 AGND
CP6A1D
CP6A1C
CP6A1B
CP6A1A
470pF-8P4C
J6A1
AUD_R_LINE_OUT_F
AUD_L_LINE_OUT_F
AUD_R_LINE_IN_CONN_F
AUD_L_LINE_IN_CONN_F
TR
TL
BR
BL
SOU1
SIN1
SOP1
SOU2
SIN2
SOP2
35 JS0
R2A11
10K
PHONEJACK-2
35,56 AGND
FB5A1
FB80S-0805
35 AUD_R_LINE_IN
35 AUD_L_LINE_IN
C2A29
C2A30
AUD_R_LINE_IN_C
AUD_L_LINE_IN_C
R590
R591
AUD_R_LINE_IN_CONN
AUD_L_LINE_IN_CONN
R592
R593
4.7K
+5VR
C3A6
0.1uF
C3A7
1uF-0805
35 MIC_IN
FB18
FB120S
35,56 AGND
R630
1K
C433
0.1uF
J5A1
PHONEJACK-1
C1107
470pF
MS-6508-00B
0502_1 / 01
Micro Star Restricted Secret
Title
Speaker out Mic-in and Line-in
Rev
0D
Document Number
MICRO-STAR INT'L CO.,LTD.
No. 69, Li-De St, Jung-He City,
Taipei Hsien, Taiwan
http://www.msi.com.tw
Last Revision Date:
Tuesday, May 22, 2001
Sheet
36 of 56

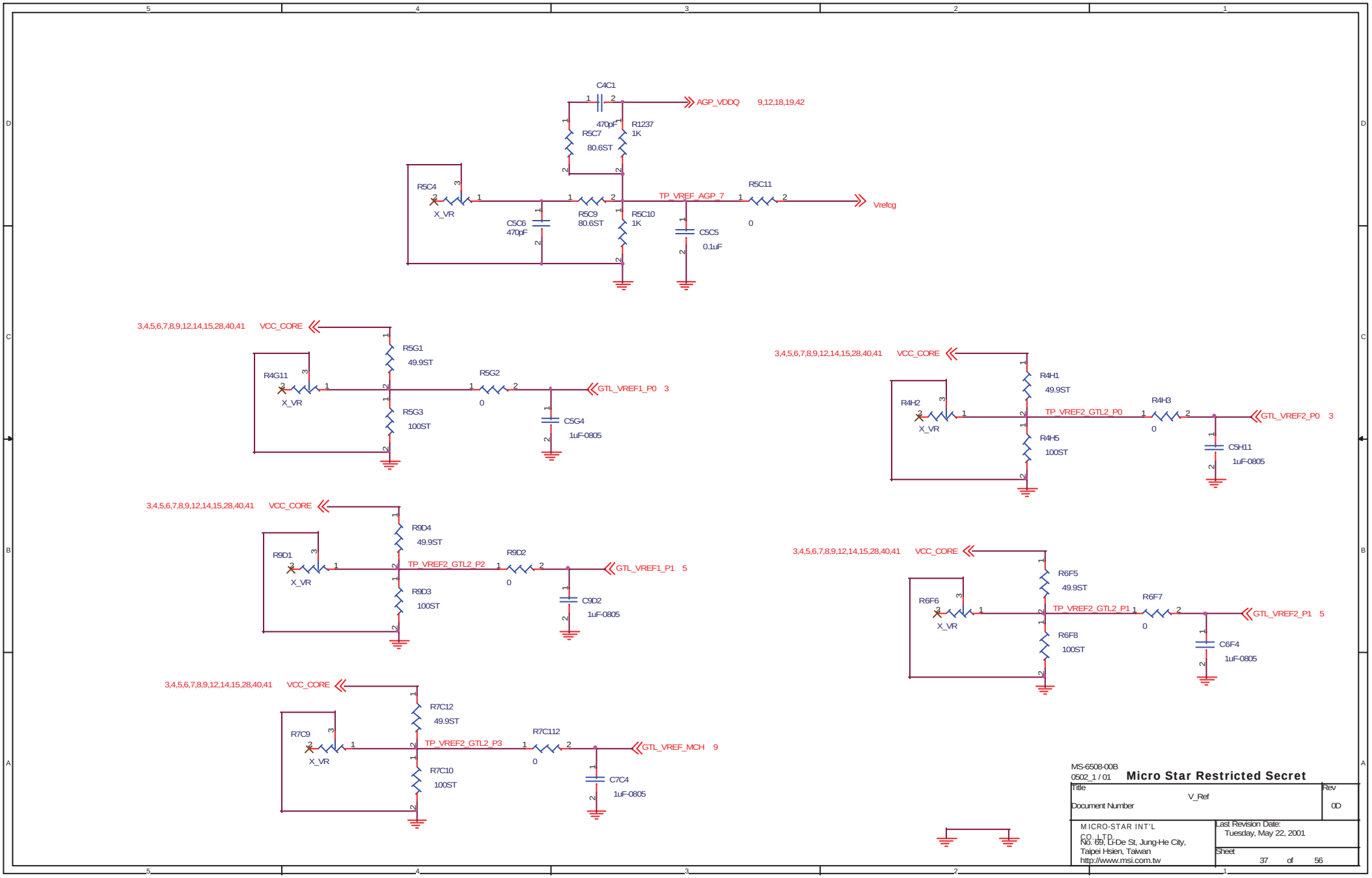

MS-6508-00B
0502_1 / 01

Micro Star Restricted Secret

Title: V_Ref	Rev: 0D
Document Number	
MICRO-STAR INT'L CO., LTD. No. 69, Li-De St, Jung-He City, Taipei Hsien, Taiwan http://www.msi.com.tw	Last Revision Date: Tuesday, May 22, 2001
	Sheet 37 of 56

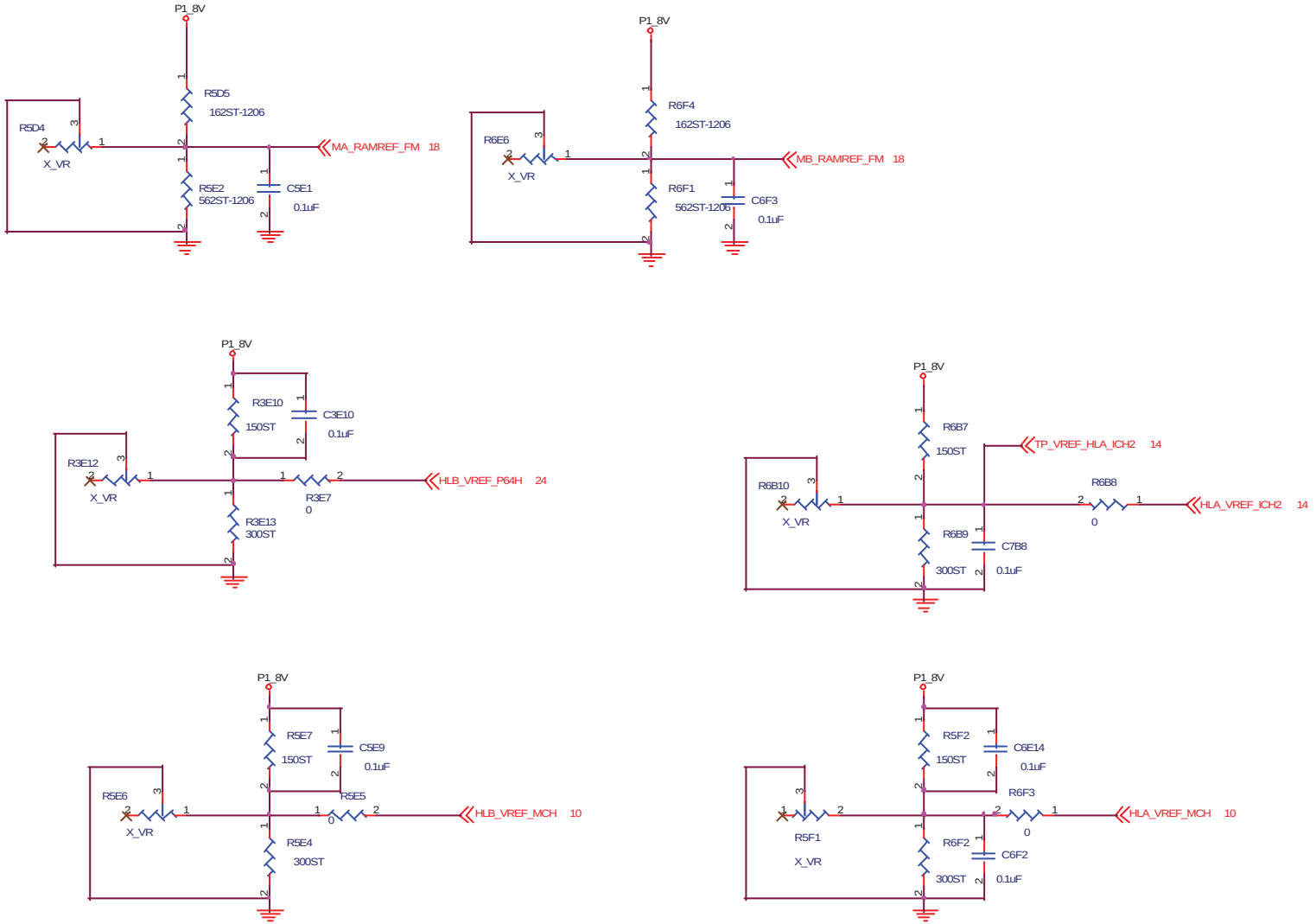

MS-6508-00B
0502_1 / 01

Micro Star Restricted Secret

Title: V_Ref	Rev: 0D
Document Number	
MICRO-STAR INT'L CO., LTD. No. 69, Li-De St, Jung-He City, Taipei Hsien, Taiwan http://www.msi.com.tw	Last Revision Date: Tuesday, May 22, 2001
	Sheet 38 of 56

STANDBY3V Voltage Regulator

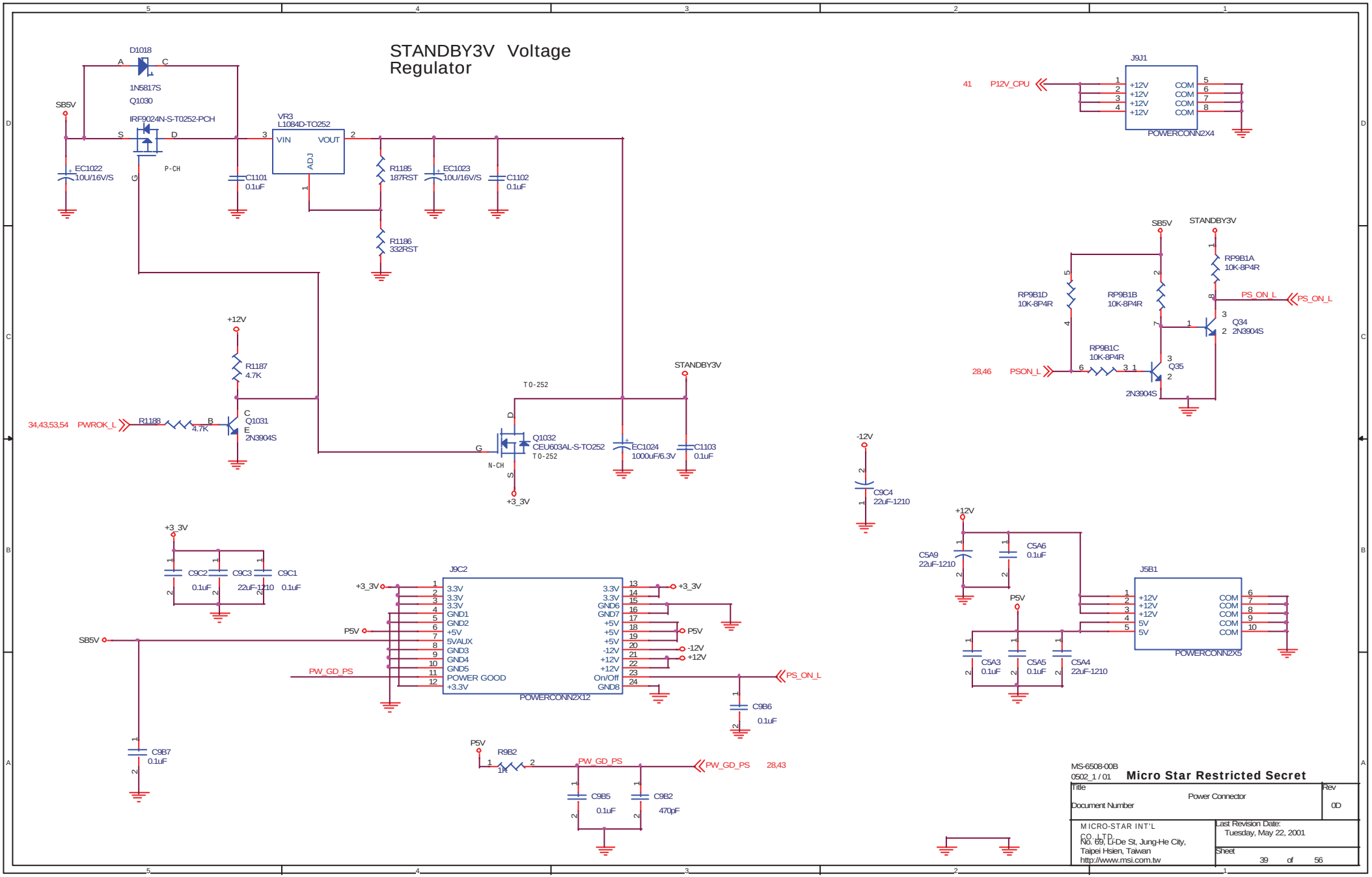

MS-6508-00B
0502_1 / 01

Micro Star Restricted Secret

Title	Power Connector	Rev 0D
Document Number		
MICRO-STAR INT'L CO., LTD. No. 69, Li-De St, Jung-He City, Taipei Hsien, Taiwan http://www.msi.com.tw	Last Revision Date: Tuesday, May 22, 2001	Sheet 39 of 56

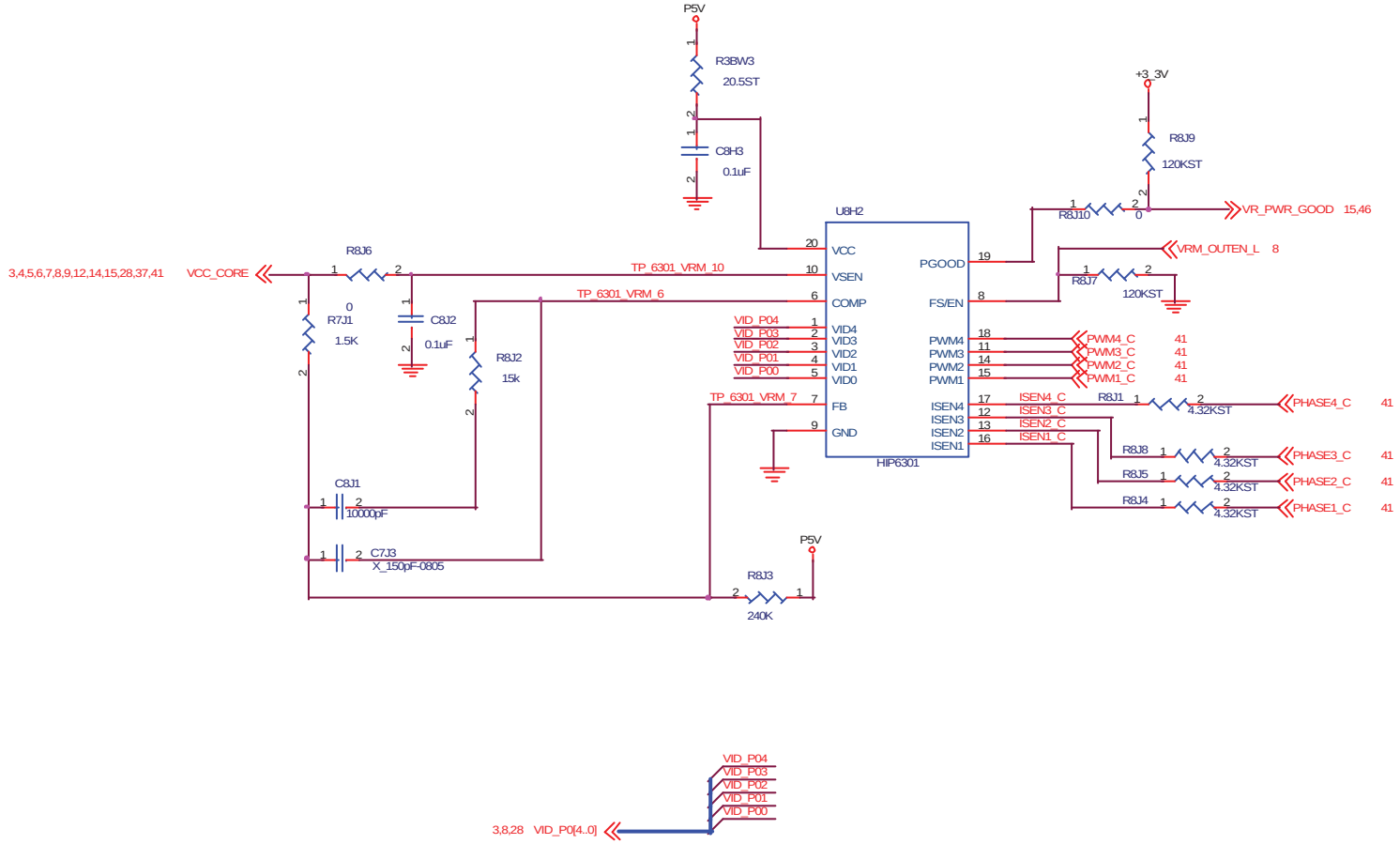

MS-6508-00B
0502_1 / 01

Micro Star Restricted Secret

Title: PWM 1	Rev: 0D
Document Number	
MICRO-STAR INT'L CO., LTD. No. 69, Li-De St, Jung-He City, Taipei Hsien, Taiwan http://www.msi.com.tw	Last Revision Date: Tuesday, May 22, 2001
	Sheet 40 of 56

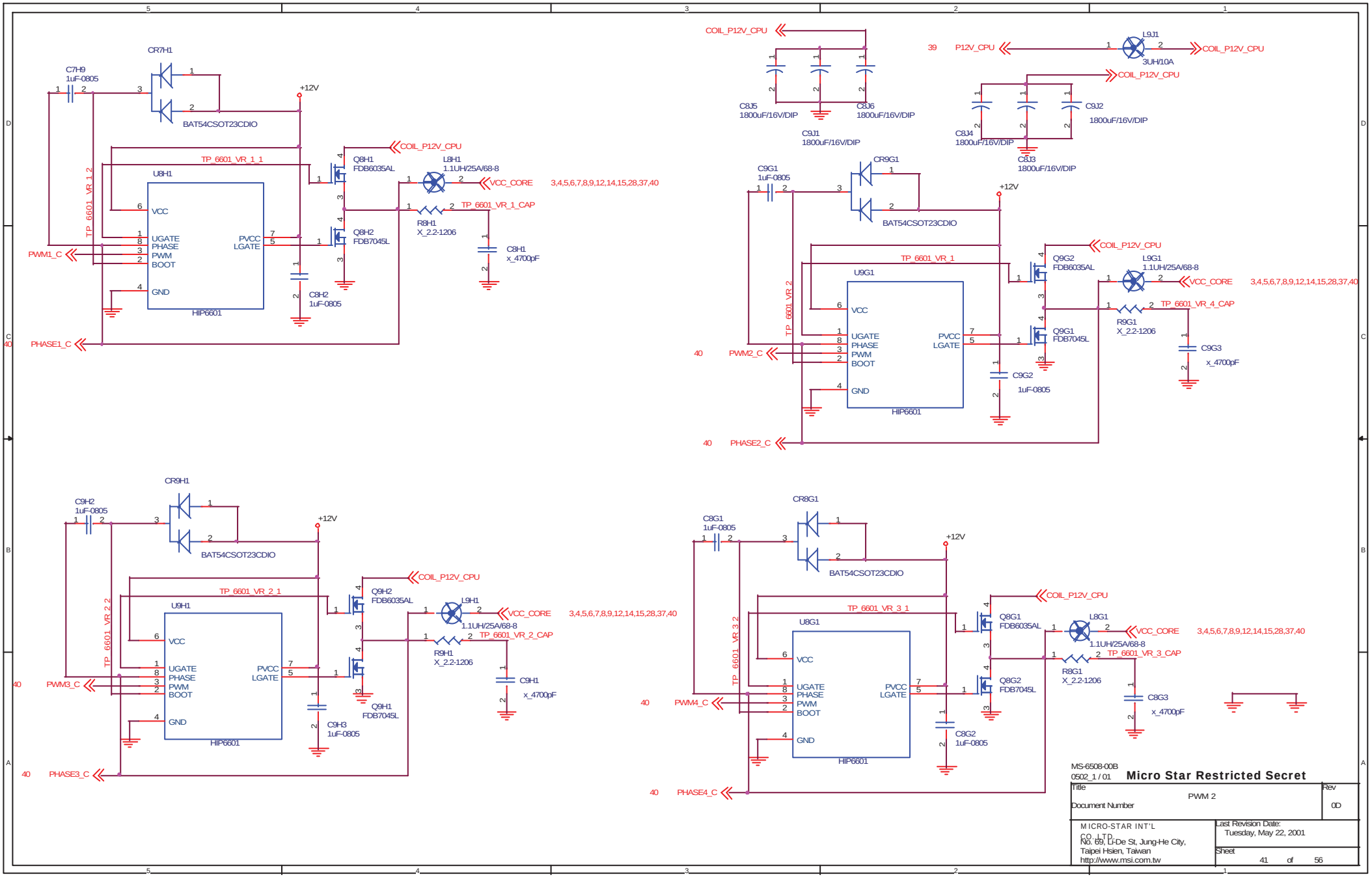
CR7H1
C7H9
1uF-0805
BAT54CSOT23CDIO
+12V
COIL_P12V_CPU
TP_6601_VR_1_1
U8H1
Q8H1
FDB6035AL
L8H1
1.1UH/25A/68-8
VCC_CORE
3,4,5,6,7,8,9,12,14,15,28,37,40
TP_6601_VR_1_CAP
R8H1
X_2.2-1206
C8H1
x_4700pF
Q8H2
FDB7045L
C8H2
1uF-0805
VCC
UGATE
PHASE
PWM
BOOT
GND
PVCC
LGATE
HIP6601
TP_6601_VR_1_2
PWM1_C
PHASE1_C
C8J5
1800uF/16V/DIP
C8J6
1800uF/16V/DIP
C9J1
1800uF/16V/DIP
39
P12V_CPU
L9J1
3UH/10A
C9J2
1800uF/16V/DIP
C8J4
1800uF/16V/DIP
C8J3
1800uF/16V/DIP
CR9G1
C9G1
1uF-0805
U9G1
Q9G2
FDB6035AL
L9G1
1.1UH/25A/68-8
TP_6601_VR_4_CAP
R9G1
X_2.2-1206
C9G3
x_4700pF
Q9G1
FDB7045L
C9G2
1uF-0805
TP_6601_VR_2
PWM2_C
PHASE2_C
CR9H1
C9H2
1uF-0805
U9H1
Q9H2
FDB6035AL
L9H1
TP_6601_VR_2_CAP
R9H1
C9H1
Q9H1
FDB7045L
C9H3
1uF-0805
TP_6601_VR_2_2
PWM3_C
PHASE3_C
CR8G1
C8G1
1uF-0805
U8G1
Q8G1
FDB6035AL
L8G1
TP_6601_VR_3_CAP
R8G1
C8G3
Q8G2
FDB7045L
C8G2
1uF-0805
TP_6601_VR_3_2
PWM4_C
PHASE4_C
MS-6508-00B
0502_1 / 01
Micro Star Restricted Secret
Title
PWM 2
Rev
0D
Document Number
MICRO-STAR INT'L CO.,LTD.
No. 69, Li-De St, Jung-He City,
Taipei Hsien, Taiwan
http://www.msi.com.tw
Last Revision Date:
Tuesday, May 22, 2001
Sheet
41 of 56

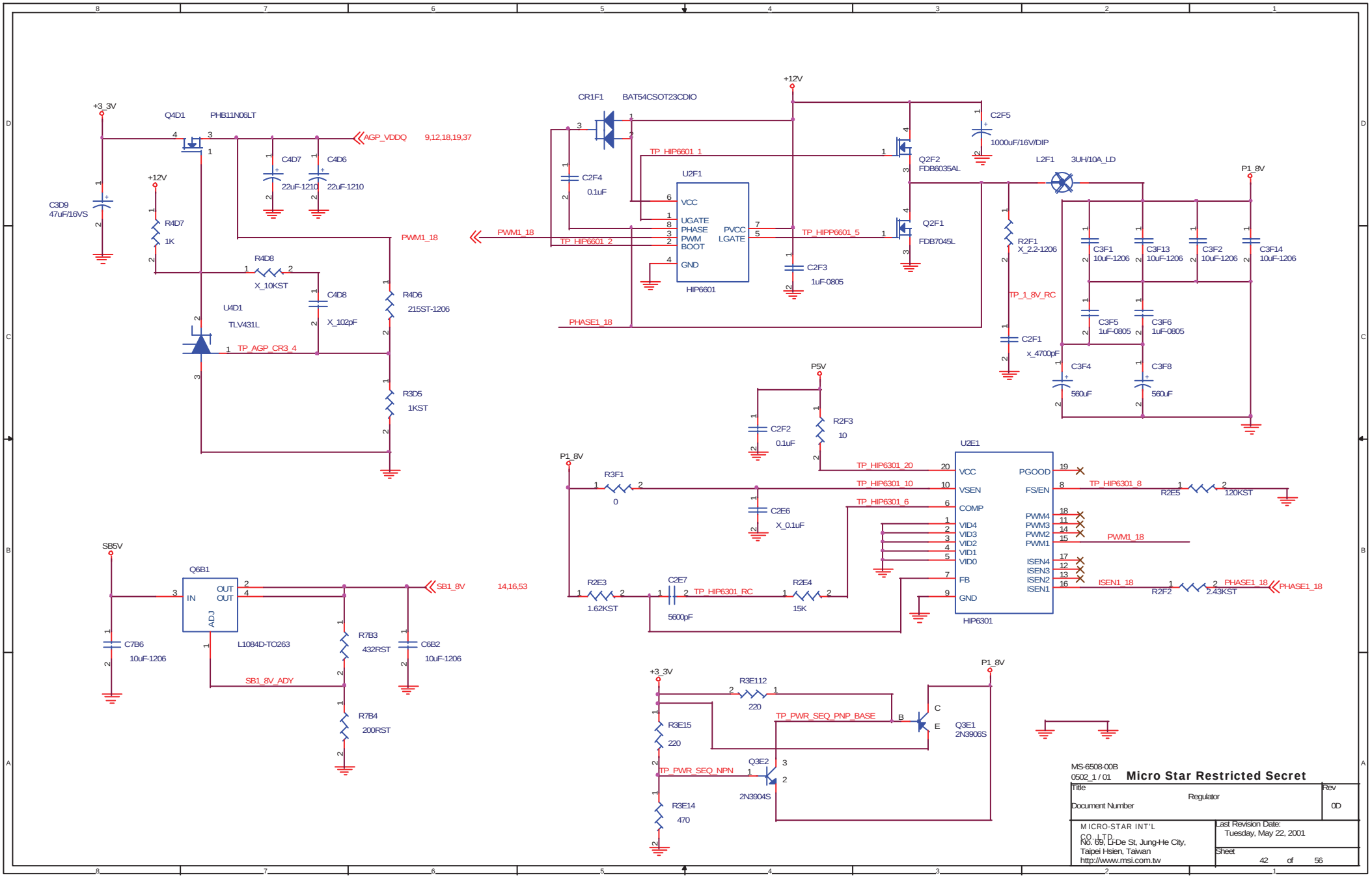
+3_3V
Q4D1
PHB11N06LT
AGP_VDDQ
9,12,18,19,37
C4D7
22uF-1210
C4D6
22uF-1210
C3D9
47uF/16VS
+12V
R4D7
1K
R4D8
X_10KST
C4D8
X_102pF
U4D1
TLV431L
TP_AGP_CR3_4
PWM1_18
R4D6
215ST-1206
R3D5
1KST
CR1F1
BAT54CSOT23CDIO
C2F4
0.1uF
U2F1
VCC
UGATE
PHASE
PWM
BOOT
GND
PVCC
LGATE
HIP6601
TP_HIP6601_1
TP_HIP6601_2
TP_HIPP6601_5
C2F3
1uF-0805
Q2F2
FDB6035AL
Q2F1
FDB7045L
C2F5
1000uF/16V/DIP
L2F1
3UH/10A_LD
P1_8V
R2F1
X_2.2-1206
TP_1_8V_RC
C2F1
x_4700pF
C3F1
10uF-1206
C3F13
10uF-1206
C3F2
10uF-1206
C3F14
10uF-1206
C3F5
1uF-0805
C3F6
1uF-0805
C3F4
560uF
C3F8
560uF
PHASE1_18
P5V
C2F2
0.1uF
R2F3
10
U2E1
TP_HIP6301_20
TP_HIP6301_10
TP_HIP6301_6
VCC
VSEN
COMP
VID4
VID3
VID2
VID1
VID0
FB
GND
PGOOD
FS/EN
PWM4
PWM3
PWM2
PWM1
ISEN4
ISEN3
ISEN2
ISEN1
HIP6301
TP_HIP6301_8
R2E5
120KST
ISEN1_18
R2F2
2.43KST
PHASE1_18
R3F1
0
C2E6
X_0.1uF
R2E3
1.62KST
C2E7
5600pF
TP_HIP6301_RC
R2E4
15K
SB5V
Q6B1
IN
OUT
ADJ
L1084D-TO263
C7B6
10uF-1206
SB1_8V
14,16,53
R7B3
432RST
C6B2
10uF-1206
SB1_8V_ADY
R7B4
200RST
R3E112
220
TP_PWR_SEQ_PNP_BASE
Q3E1
2N3906S
R3E15
220
TP_PWR_SEQ_NPN
Q3E2
2N3904S
R3E14
470
MS-6508-00B
0502_1 / 01
Micro Star Restricted Secret
Title
Regulator
Rev
0D
Document Number
MICRO-STAR INT'L CO., LTD.
No. 69, Li-De St, Jung-He City,
Taipei Hsien, Taiwan
http://www.msi.com.tw
Last Revision Date:
Tuesday, May 22, 2001
Sheet
42 of 56

Front Pannel & ATX Power Connector

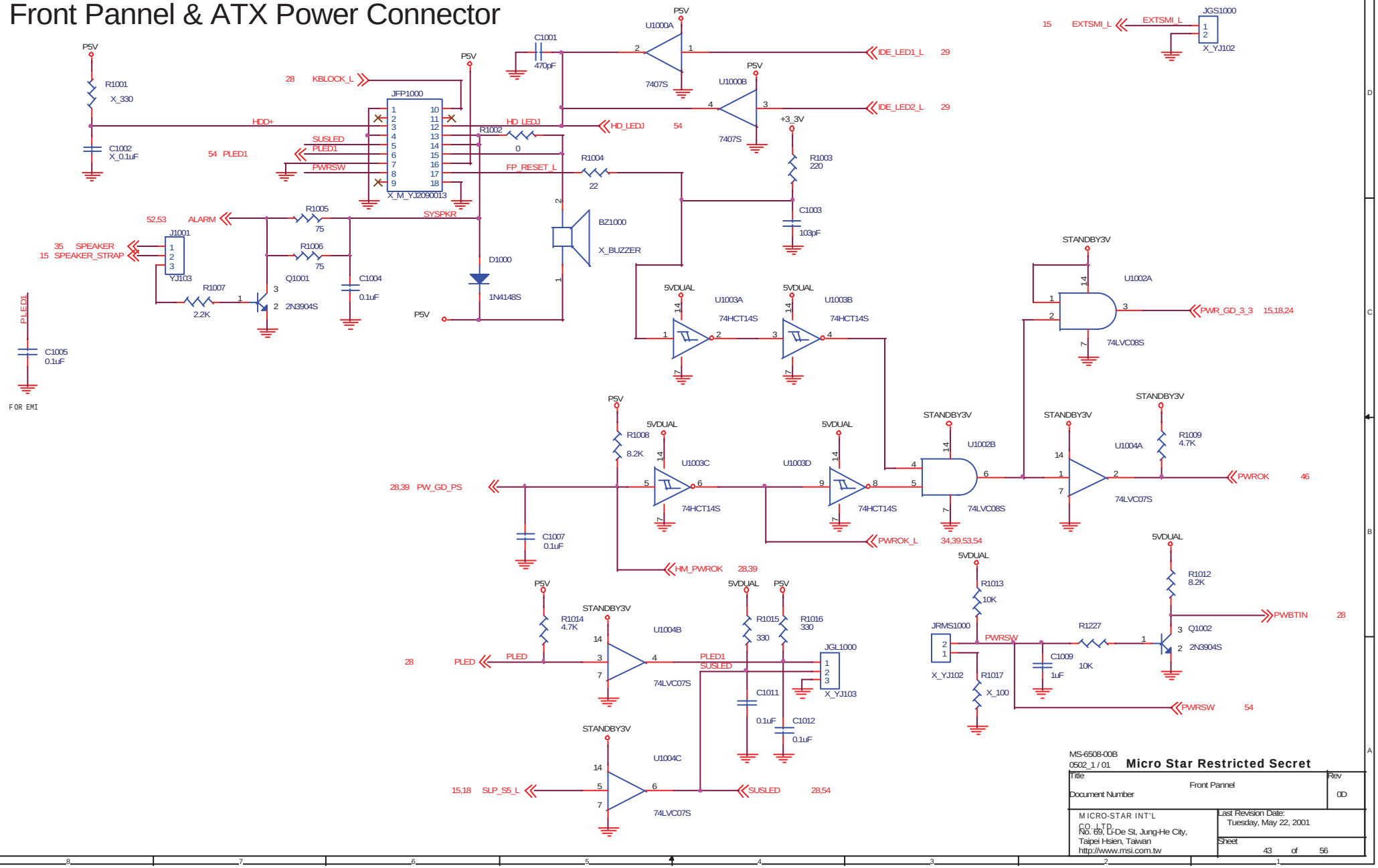

MS-6508-00B
0502_1 / 01

Micro Star Restricted Secret

Title	Front Pannel	Rev 0D
Document Number		
MICRO-STAR INT'L CO., LTD. No. 69, Li-De St, Jung-He City, Taipei Hsien, Taiwan http://www.msi.com.tw	Last Revision Date: Tuesday, May 22, 2001	Sheet 43 of 56

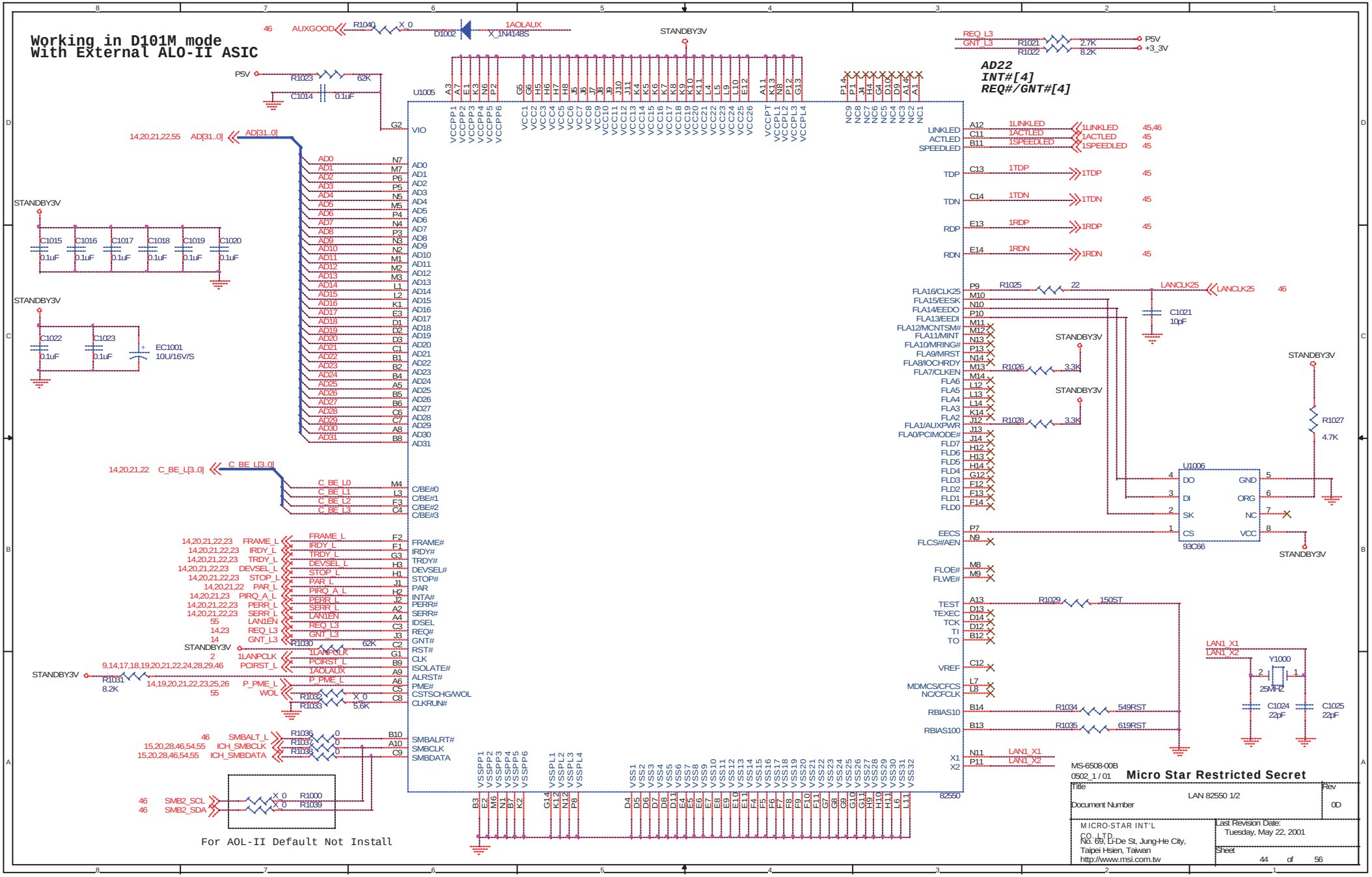
Working in D101M mode
With External ALO-II ASIC
AD22
INT#[4]
REQ#/GNT#[4]
U1005
82550
U1006
93C66
Y1000
25MHZ
STANDBY3V
P5V
+3_3V
AD[31..0]
C_BE_L[3..0]
LANCLK25
LAN1_X1
LAN1_X2
1LINKLED
1ACTLED
1SPEEDLED
1TDP
1TDN
1RDP
1RDN
1AOLAUX
1LANPCLK
PCIRST_L
P_PME_L
ICH_SMBCLK
ICH_SMBDATA
SMB2_SCL
SMB2_SDA
LAN 82550 1/2
MS-6508-00B
0502_1 / 01
Micro Star Restricted Secret
MICRO-STAR INT'L CO., LTD.
No. 69, Li-De St, Jung-He City, Taipei Hsien, Taiwan
http://www.msi.com.tw
Tuesday, May 22, 2001
44 of 56
For AOL-II Default Not Install

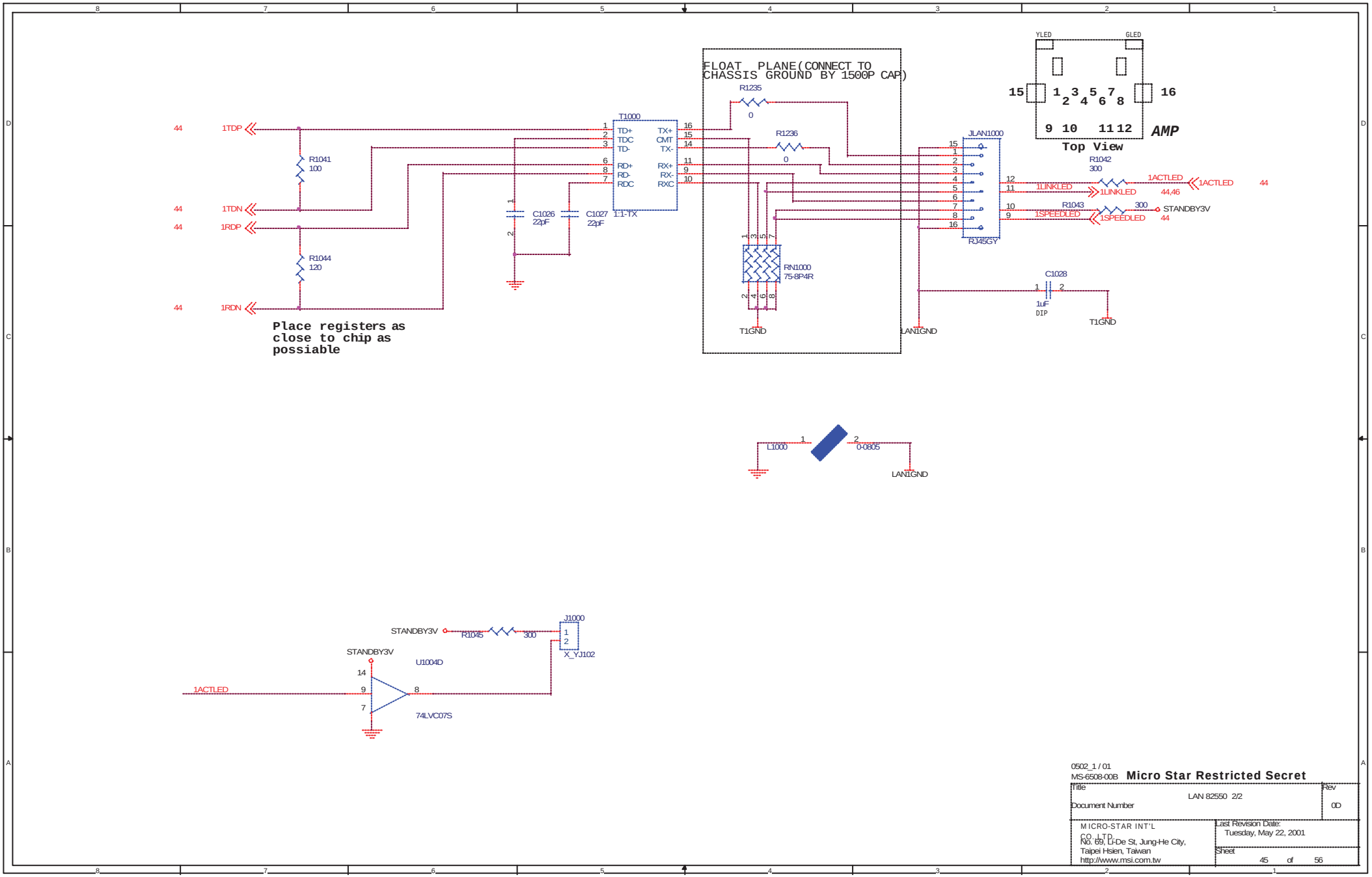

0502_1 / 01
MS-6508-00B **Micro Star Restricted Secret**

Title	LAN 82550 2/2	Rev
Document Number		0D

MICRO-STAR INT'L CO., LTD.
No. 69, Li-De St, Jung-He City, Taipei Hsien, Taiwan
http://www.msi.com.tw

Last Revision Date: Tuesday, May 22, 2001

Sheet 45 of 56

AlertOnLAN 2

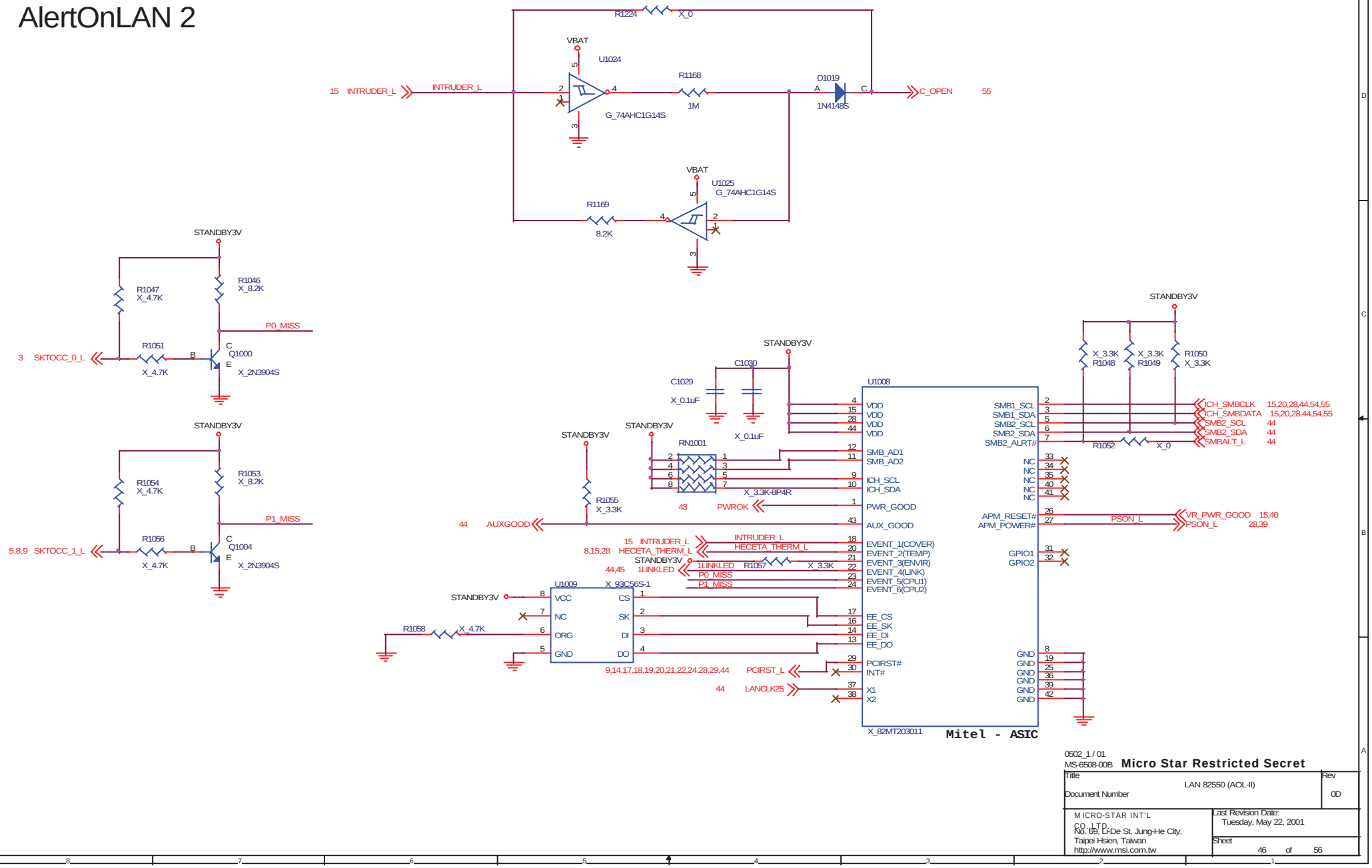

0502_1 / 01
MS-6508-00B **Micro Star Restricted Secret**

Title	LAN 82550 (AOL-II)	Rev
Document Number		0D
MICRO-STAR INT'L CO.,LTD. No. 69, Li-De St, Jung-He City, Taipei Hsien, Taiwan http://www.msi.com.tw	Last Revision Date: Tuesday, May 22, 2001	
	Sheet 46 of 56	

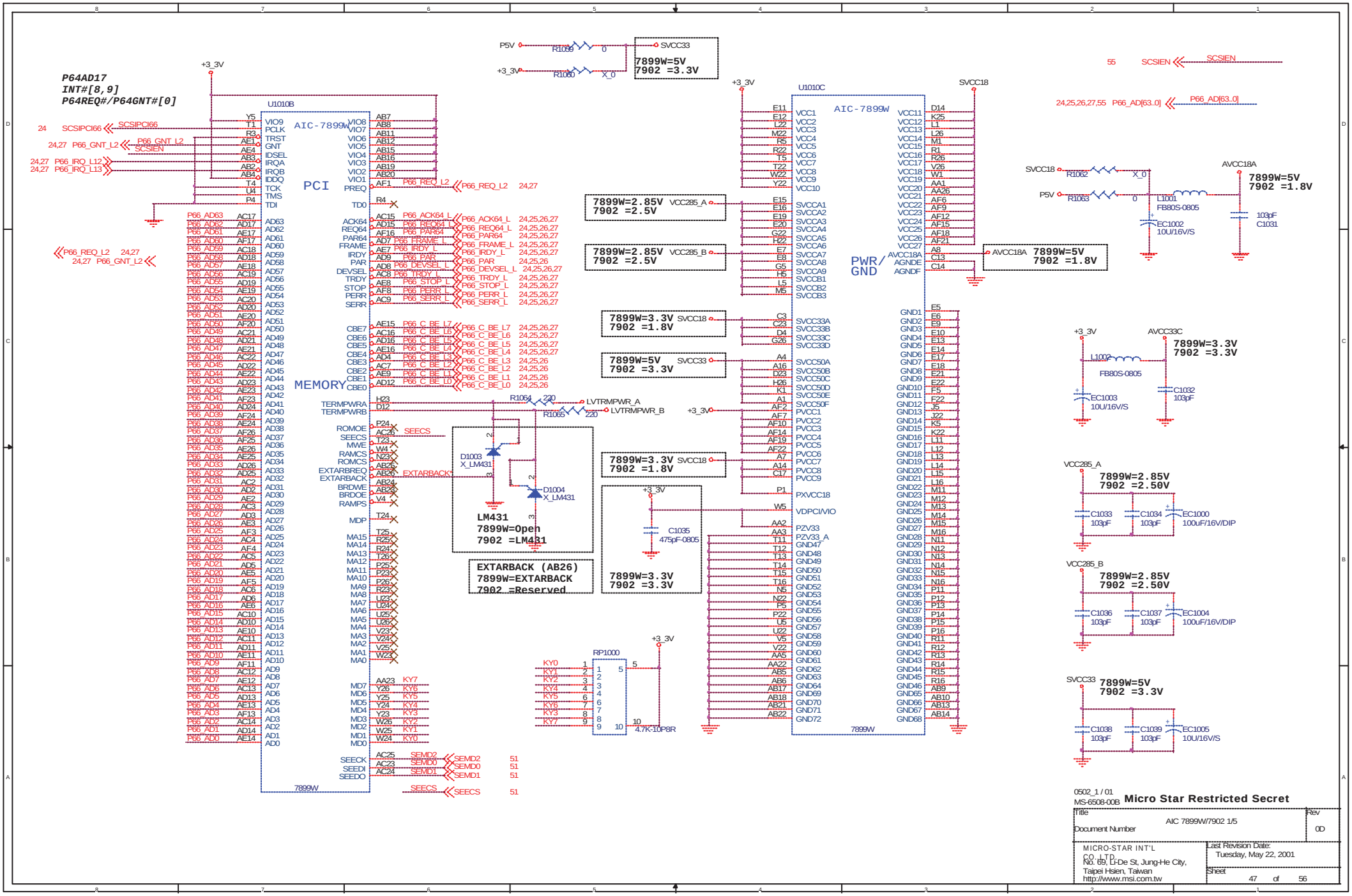
P64AD17
INT#[8,9]
P64REQ#/P64GNT#[0]
U1010B
AIC-7899W
PCI
MEMORY
7899W
U1010C
PWR/GND
SCSIPCI66
P66_GNT_L2
SCSIEN
P66_IRQ_L12
P66_IRQ_L13
P66_REQ_L2
P66_AD[63..0]
P66_ACK64_L
P66_REQ64_L
P66_PAR64
P66_FRAME_L
P66_IRDY_L
P66_PAR
P66_DEVSEL_L
P66_TRDY_L
P66_STOP_L
P66_PERR_L
P66_SERR_L
P66_C_BE_L7
P66_C_BE_L6
P66_C_BE_L5
P66_C_BE_L4
P66_C_BE_L3
P66_C_BE_L2
P66_C_BE_L1
P66_C_BE_L0
SEECS
EXTARBACK
SEMD2
SEMD0
SEMD1
KY7
KY6
KY5
KY4
KY3
KY2
KY1
KY0
LVTRMPWR_A
LVTRMPWR_B
R1064 220
R1065 220
D1003 X_LM431
D1004 X_LM431
LM431
7899W=Open
7902 =LM431
EXTARBACK (AB26)
7899W=EXTARBACK
7902 =Reserved
RP1000
4.7K-10P8R
P5V
R1059 0
R1060 X_0
SVCC33
7899W=5V
7902 =3.3V
7899W=2.85V
7902 =2.5V
VCC285_A
VCC285_B
7899W=3.3V
7902 =1.8V
SVCC18
7899W=5V
7902 =3.3V
C1035 475pF-0805
SVCC18
R1062 X_0
R1063 0
L1001 FB80S-0805
EC1002 10U/16V/S
AVCC18A
7899W=5V
7902 =1.8V
C1031 103pF
L1002 FB80S-0805
EC1003 10U/16V/S
AVCC33C
7899W=3.3V
7902 =3.3V
C1032 103pF
VCC285_A
7899W=2.85V
7902 =2.50V
C1033 103pF
C1034 103pF
EC1000 100uF/16V/DIP
VCC285_B
7899W=2.85V
7902 =2.50V
C1036 103pF
C1037 103pF
EC1004 100uF/16V/DIP
SVCC33
7899W=5V
7902 =3.3V
C1038 103pF
C1039 103pF
EC1005 10U/16V/S
0502_1 / 01
MS-6508-00B
Micro Star Restricted Secret
Title
AIC 7899W/7902 1/5
Rev
0D
Document Number
MICRO-STAR INT'L CO.,LTD.
No. 69, Li-De St, Jung-He City, Taipei Hsien, Taiwan
http://www.msi.com.tw
Last Revision Date:
Tuesday, May 22, 2001
Sheet
47 of 56

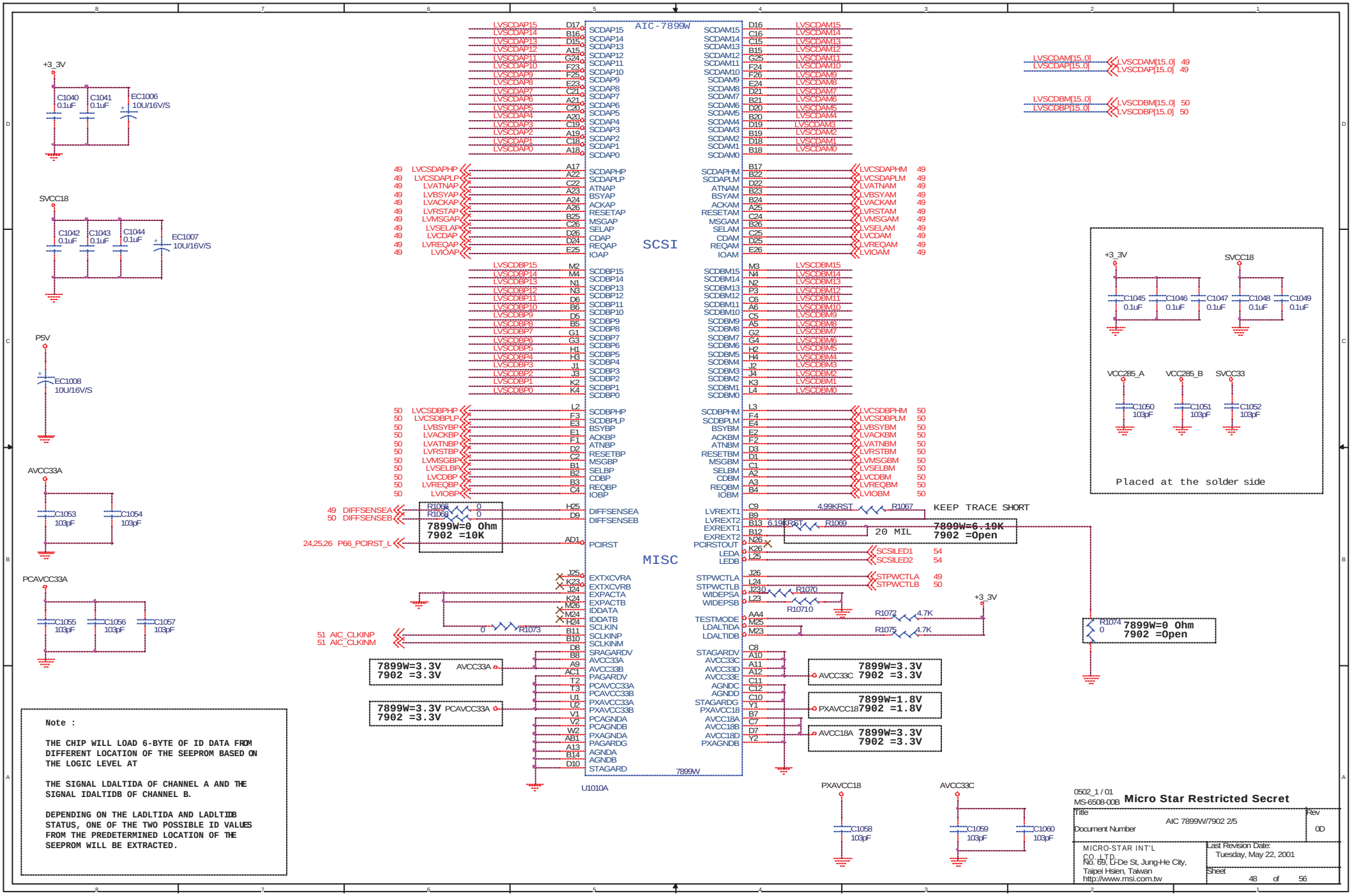

Note :

THE CHIP WILL LOAD 6-BYTE OF ID DATA FROM DIFFERENT LOCATION OF THE SEEPROM BASED ON THE LOGIC LEVEL AT

THE SIGNAL LDALTIDA OF CHANNEL A AND THE SIGNAL IDALTIDB OF CHANNEL B.

DEPENDING ON THE LADLTIDA AND LADLTIDB STATUS, ONE OF THE TWO POSSIBLE ID VALUES FROM THE PREDETERMINED LOCATION OF THE SEEPROM WILL BE EXTRACTED.

0502_1 / 01
MS-6508-00B **Micro Star Restricted Secret**

Title	AIC 7899W/7902 2/5
Rev	0D
Document Number	
MICRO-STAR INT'L CO.,LTD. No. 69, Li-De St, Jung-He City, Taipei Hsien, Taiwan http://www.msi.com.tw	Last Revision Date: Tuesday, May 22, 2001
	Sheet 48 of 56

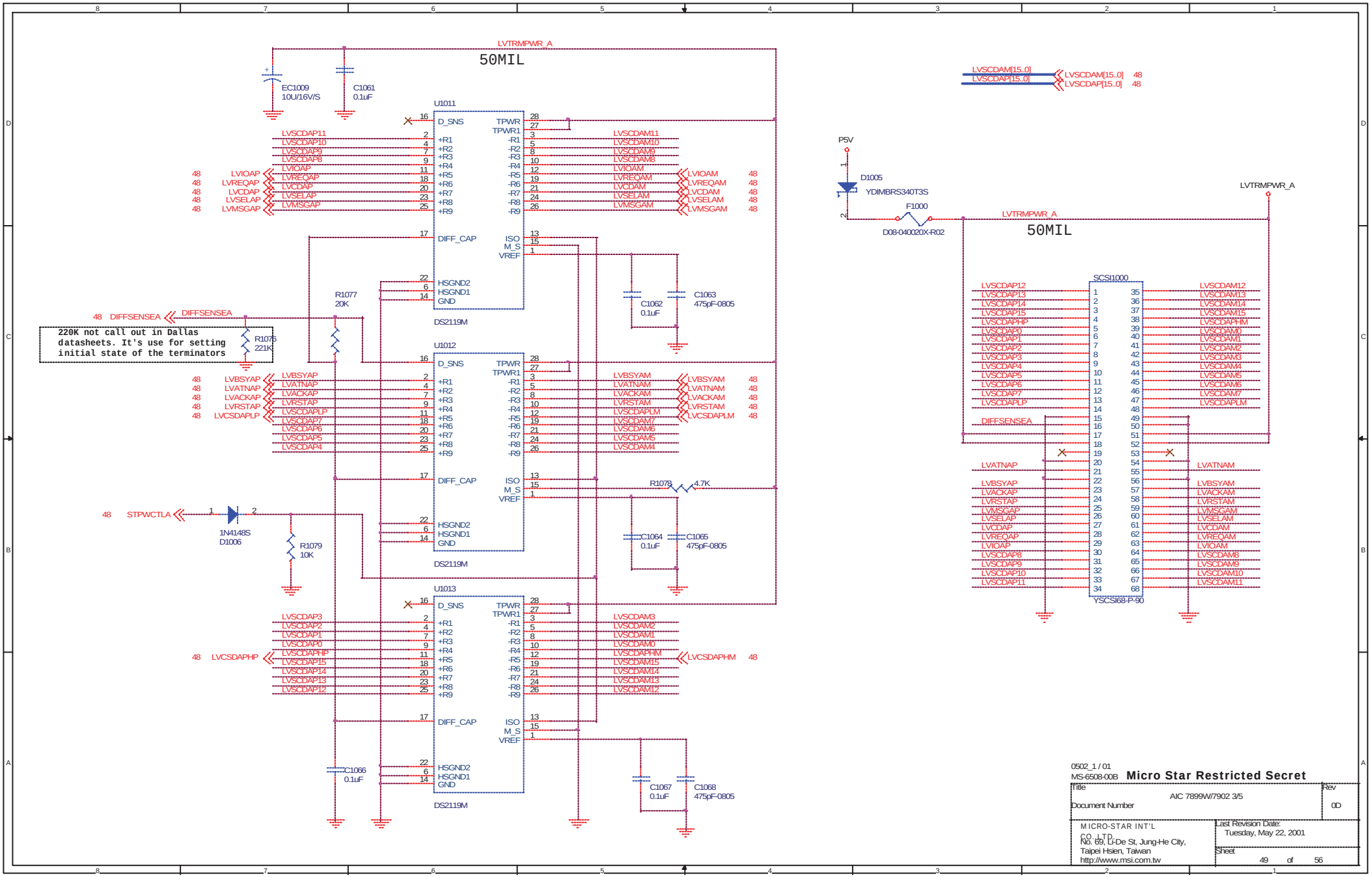
LVTRMPWR_A
50MIL
EC1009
10U/16V/S
C1061
0.1uF
U1011
D_SNS
TPWR
TPWR1
+R1
+R2
+R3
+R4
+R5
+R6
+R7
+R8
+R9
-R1
-R2
-R3
-R4
-R5
-R6
-R7
-R8
-R9
DIFF_CAP
ISO
M_S
VREF
HSGND2
HSGND1
GND
DS2119M
LVSCDAP11
LVSCDAP10
LVSCDAP9
LVSCDAP8
LVIOAP
LVREQAP
LVCDAP
LVSELAP
LVMSGAP
LVSCDAM11
LVSCDAM10
LVSCDAM9
LVSCDAM8
LVIOAM
LVREQAM
LVCDAM
LVSELAM
LVMSGAM
C1062
0.1uF
C1063
475pF-0805
R1077
20K
DIFFSENSEA
R1076
221K
220K not call out in Dallas datasheets. It's use for setting initial state of the terminators
U1012
LVBSYAP
LVATNAP
LVACKAP
LVRSTAP
LVCSDAPLP
LVSCDAP7
LVSCDAP6
LVSCDAP5
LVSCDAP4
LVBSYAM
LVATNAM
LVACKAM
LVRSTAM
LVSCDAPLM
LVSCDAM7
LVSCDAM6
LVSCDAM5
LVSCDAM4
R1078
4.7K
STPWCTLA
1N4148S
D1006
R1079
10K
C1064
0.1uF
C1065
475pF-0805
U1013
LVSCDAP3
LVSCDAP2
LVSCDAP1
LVSCDAP0
LVCSDAPHP
LVSCDAP15
LVSCDAP14
LVSCDAP13
LVSCDAP12
LVSCDAM3
LVSCDAM2
LVSCDAM1
LVSCDAM0
LVCSDAPHM
LVSCDAM15
LVSCDAM14
LVSCDAM13
LVSCDAM12
C1066
0.1uF
C1067
0.1uF
C1068
475pF-0805
LVSCDAM[15..0]
LVSCDAP[15..0]
P5V
D1005
YDIMBRS340T3S
F1000
D08-040020X-R02
SCSI1000
YSCSI68-P-90
0502_1 / 01
MS-6508-00B
Micro Star Restricted Secret
Title
AIC 7899W/7902 3/5
Rev
0D
Document Number
MICRO-STAR INT'L CO.,LTD.
No. 69, Li-De St, Jung-He City,
Taipei Hsien, Taiwan
http://www.msi.com.tw
Last Revision Date:
Tuesday, May 22, 2001
Sheet
49 of 56

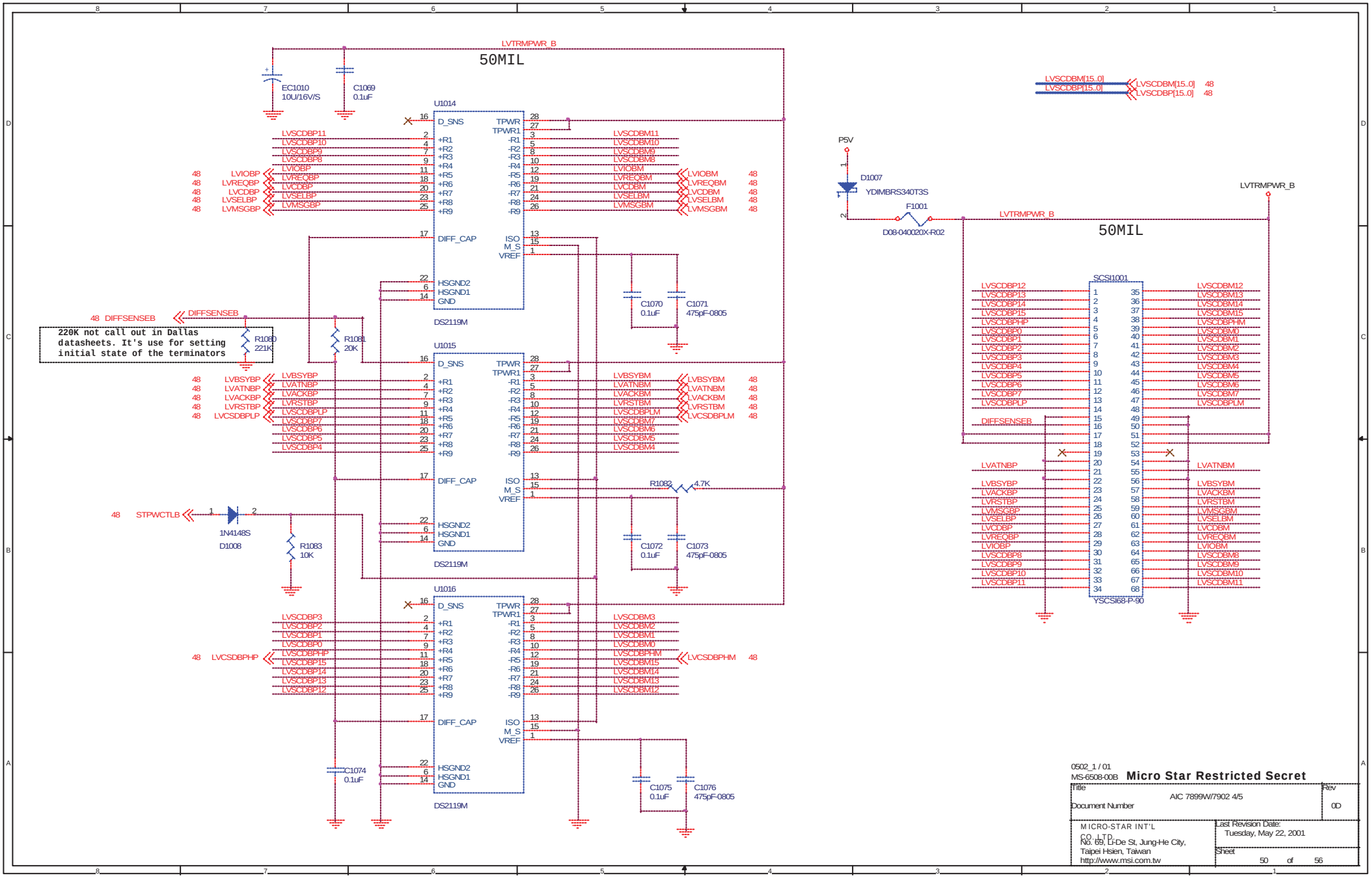
LVTRMPWR_B
50MIL
EC1010
10U/16V/S
C1069
0.1uF
U1014
D_SNS
TPWR
TPWR1
+R1
+R2
+R3
+R4
+R5
+R6
+R7
+R8
+R9
-R1
-R2
-R3
-R4
-R5
-R6
-R7
-R8
-R9
DIFF_CAP
ISO
M_S
VREF
HSGND2
HSGND1
GND
DS2119M
LVSCDBP11
LVSCDBP10
LVSCDBP9
LVSCDBP8
LVIOBP
LVREQBP
LVCDBP
LVSELBP
LVMSGBP
LVSCDBM11
LVSCDBM10
LVSCDBM9
LVSCDBM8
LVIOBM
LVREQBM
LVCDBM
LVSELBM
LVMSGBM
C1070
0.1uF
C1071
475pF-0805
DIFFSENSEB
220K not call out in Dallas datasheets. It's use for setting initial state of the terminators
R1080
221K
R1081
20K
U1015
LVBSYBP
LVATNBP
LVACKBP
LVRSTBP
LVCSDBPLP
LVSCDBP7
LVSCDBP6
LVSCDBP5
LVSCDBP4
LVBSYBM
LVATNBM
LVACKBM
LVRSTBM
LVSCDBPLM
LVSCDBM7
LVSCDBM6
LVSCDBM5
LVSCDBM4
STPWCTLB
1N4148S
D1008
R1083
10K
R1082
4.7K
C1072
0.1uF
C1073
475pF-0805
U1016
LVSCDBP3
LVSCDBP2
LVSCDBP1
LVSCDBP0
LVSCDBPHP
LVSCDBP15
LVSCDBP14
LVSCDBP13
LVSCDBP12
LVSCDBM3
LVSCDBM2
LVSCDBM1
LVSCDBM0
LVSCDBPHM
LVSCDBM15
LVSCDBM14
LVSCDBM13
LVSCDBM12
LVCSDBPHP
LVCSDBPHM
C1074
0.1uF
C1075
0.1uF
C1076
475pF-0805
LVSCDBM[15..0]
LVSCDBP[15..0]
P5V
D1007
YDIMBRS340T3S
F1001
D08-040020X-R02
SCSI1001
YSCSI68-P-90
0502_1 / 01
MS-6508-00B
Micro Star Restricted Secret
Title
AIC 7899W/7902 4/5
Rev
0D
Document Number
MICRO-STAR INT'L CO.,LTD.
No. 69, Li-De St, Jung-He City, Taipei Hsien, Taiwan
http://www.msi.com.tw
Last Revision Date:
Tuesday, May 22, 2001
Sheet
50 of 56

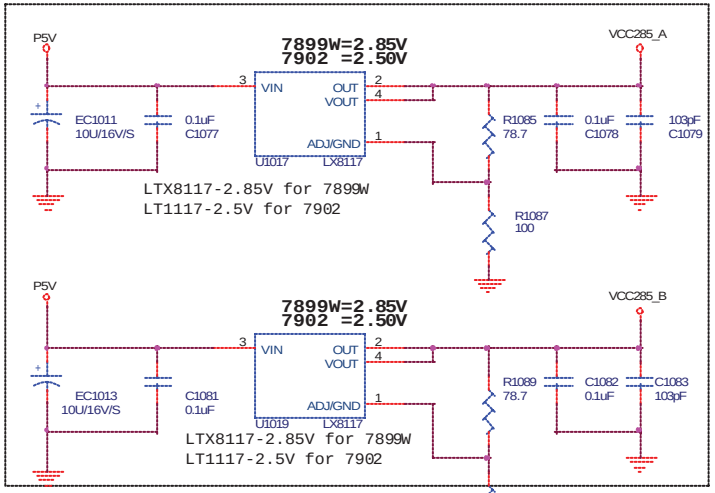

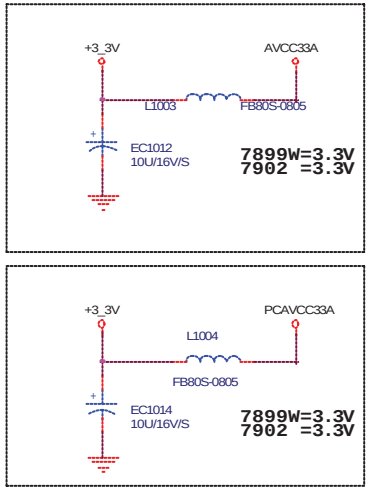

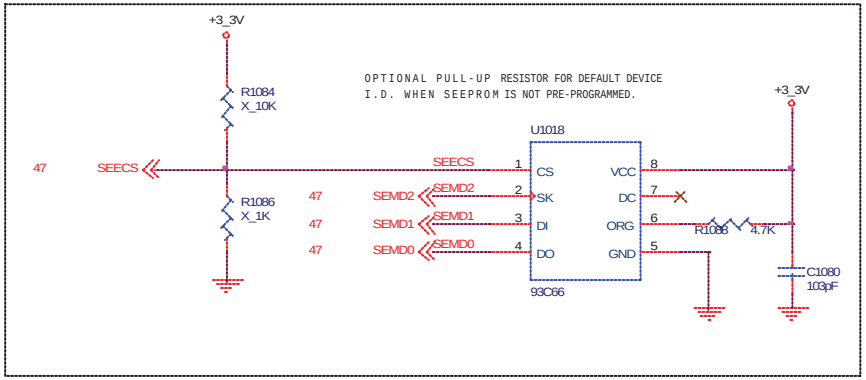

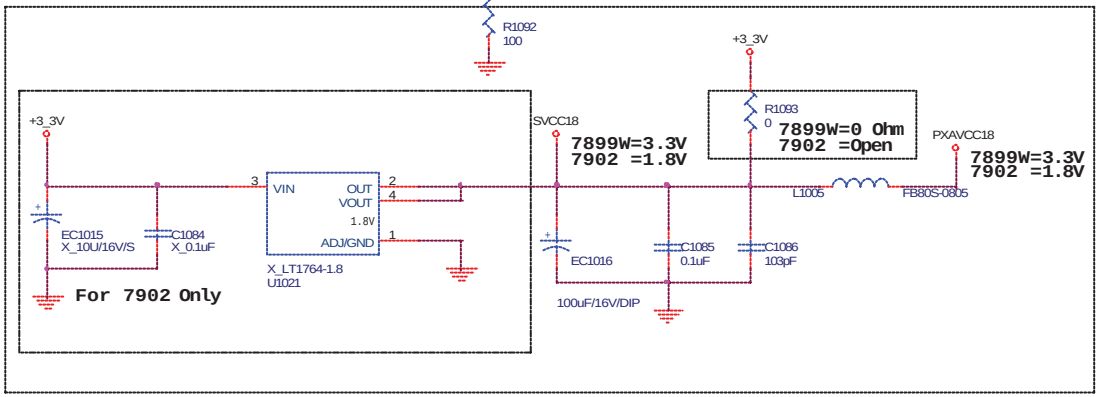

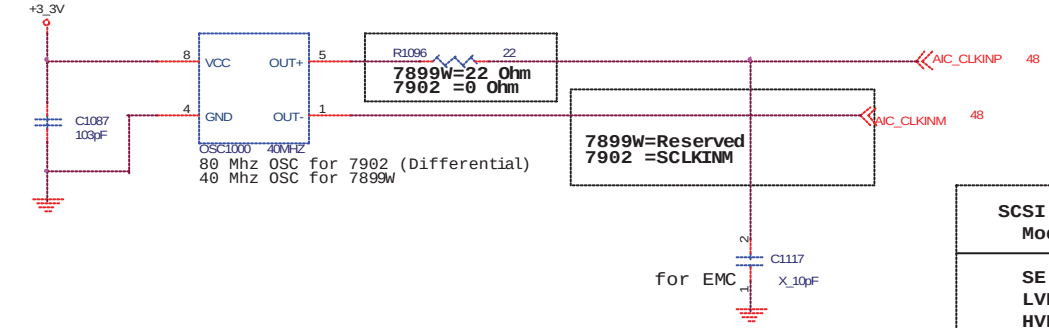

SCSI ASIC Voltage	AIC7902		AIC7899W	
	Current(A)	Power(W)	Current(A)	Power(W)
1 x 1.8V	TBD	TBD	N/A	N/A
2 x 2.5V	TBD	TBD	N/A	N/A
2 x 2.85V	N/A	N/A	0.630	1.796
1 x 3.3V	TBD	TBD	0.477	1.574
1 x 5V	N/A	N/A	0.043	0.215
Total		TBD		3.59

SCSI Bus Mode	Diffsense Signal Voltage Range(V)	Maxumum SCSI Transfer Rate
SE	-0.35 to 0.5	40MB/Sec
LVD	0.7 to 1.9	320MB/Sec
HVD	2.4 to 5.5	40MB/Sec

0502_1 / 01
MS-6508-00B **Micro Star Restricted Secret**

Title: AIC 7899W/7902 5/5
Rev: 0D
Document Number

MICRO-STAR INT'L CO., LTD.
No. 69, Li-De St, Jung-He City, Taipei Hsien, Taiwan
http://www.msi.com.tw

Last Revision Date: Tuesday, May 22, 2001
Sheet 51 of 56

LPC Hardware Monitor

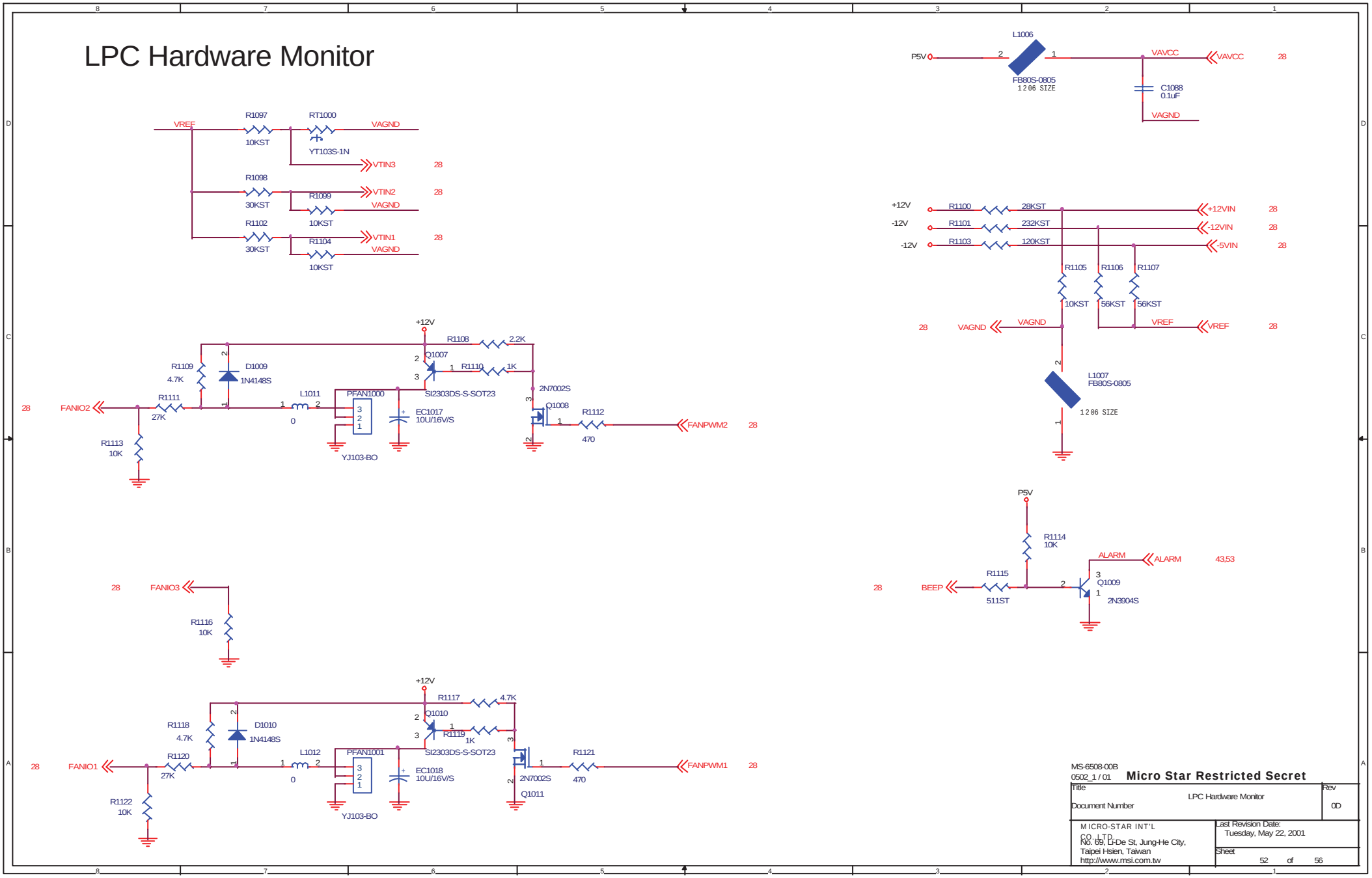

MS-6508-00B
0502_1 / 01

Micro Star Restricted Secret

Title	LPC Hardware Monitor	Rev 0D
Document Number		
MICRO-STAR INT'L CO., LTD. No. 69, Li-De St, Jung-He City, Taipei Hsien, Taiwan http://www.msi.com.tw	Last Revision Date: Tuesday, May 22, 2001	Sheet 52 of 56

Winbond W782D Hardware Monitor

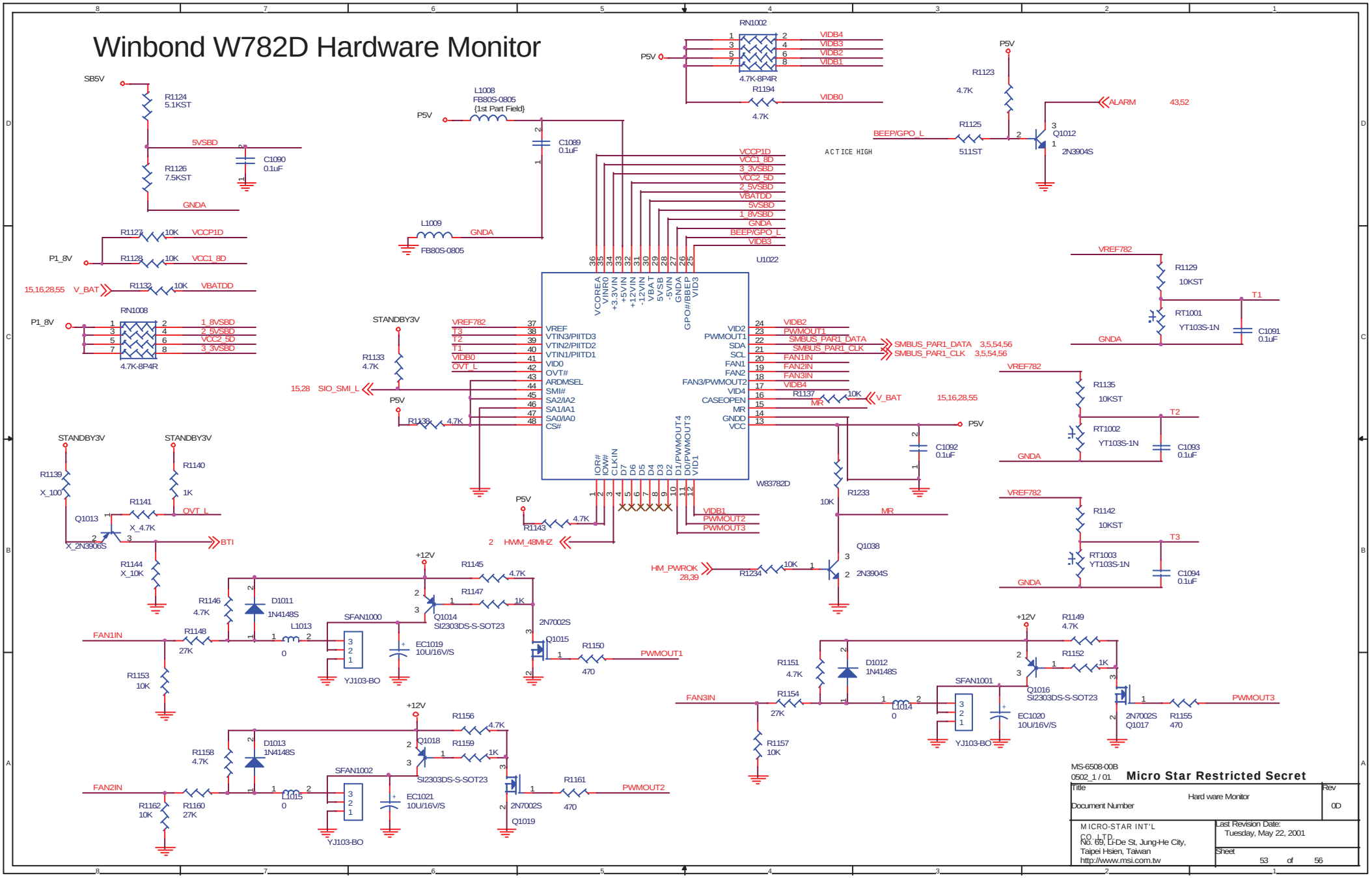

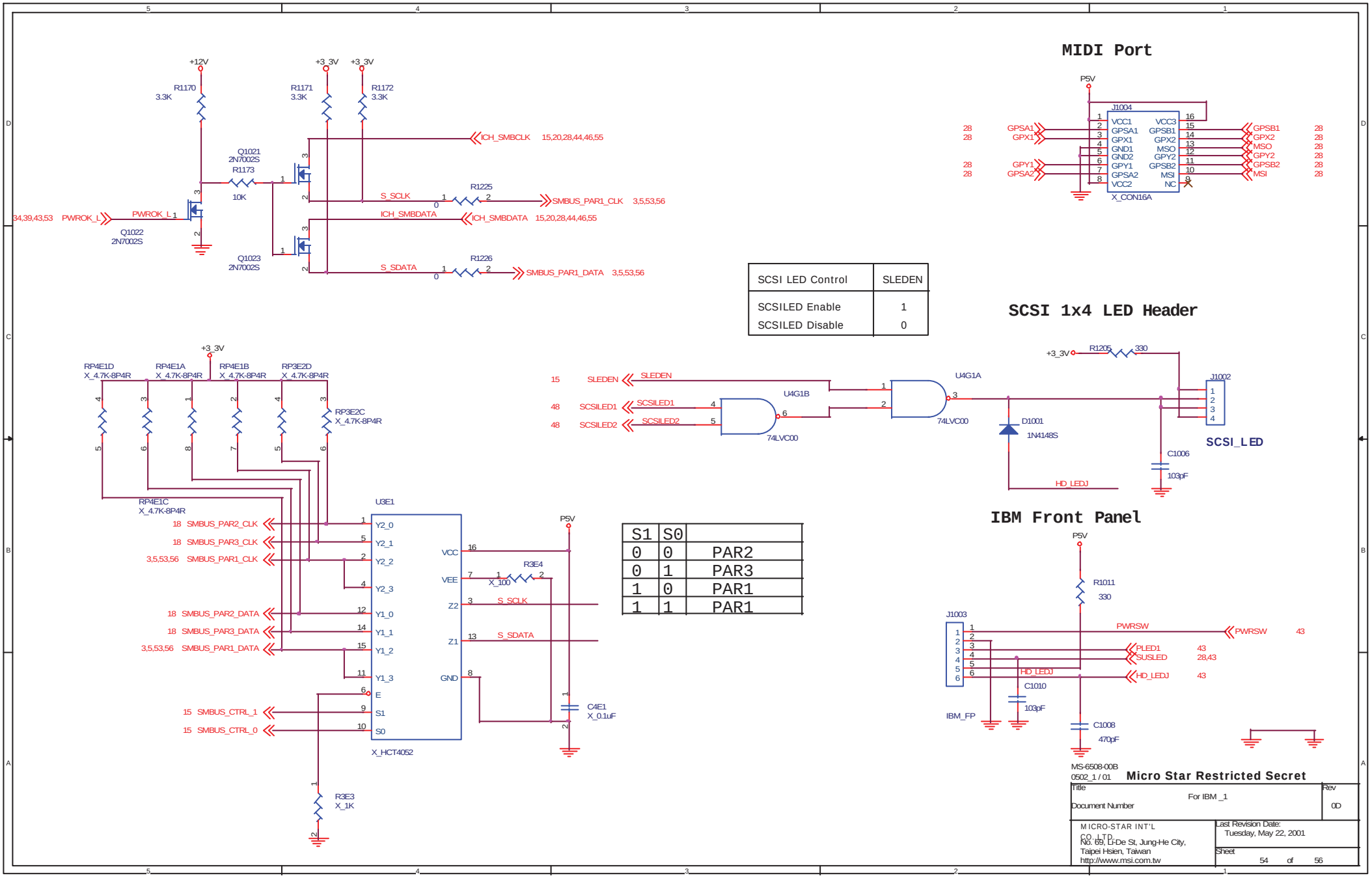

SCSI LED Control	SLEDEN
SCSILED Enable	1
SCSILED Disable	0

S1	S0	
0	0	PAR2
0	1	PAR3
1	0	PAR1
1	1	PAR1

AOL1 Header

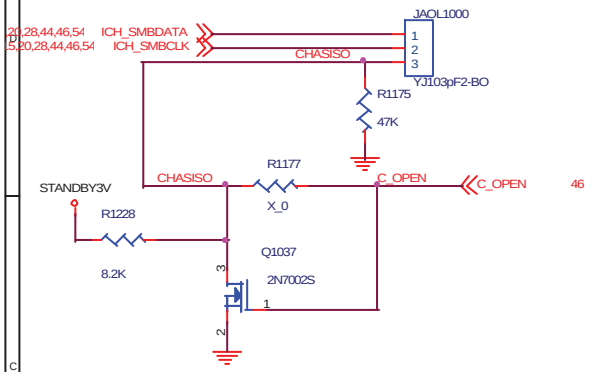

Floppy Write Protiction

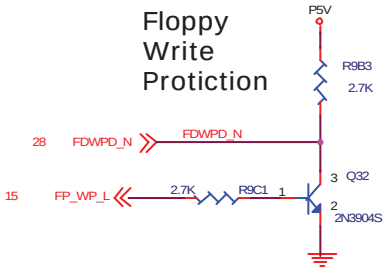

Chassis Intrusion Header

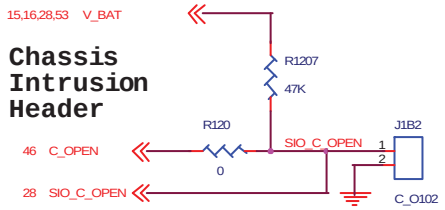

Disable On Board LAN

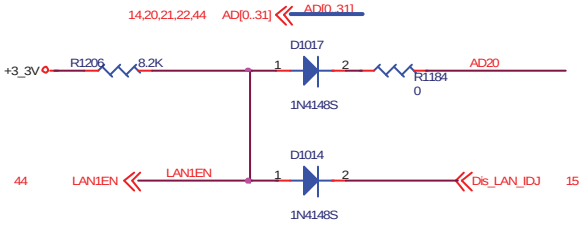

INTERNAL MODEM WAKEUP HEADER

8/14 UPDATED

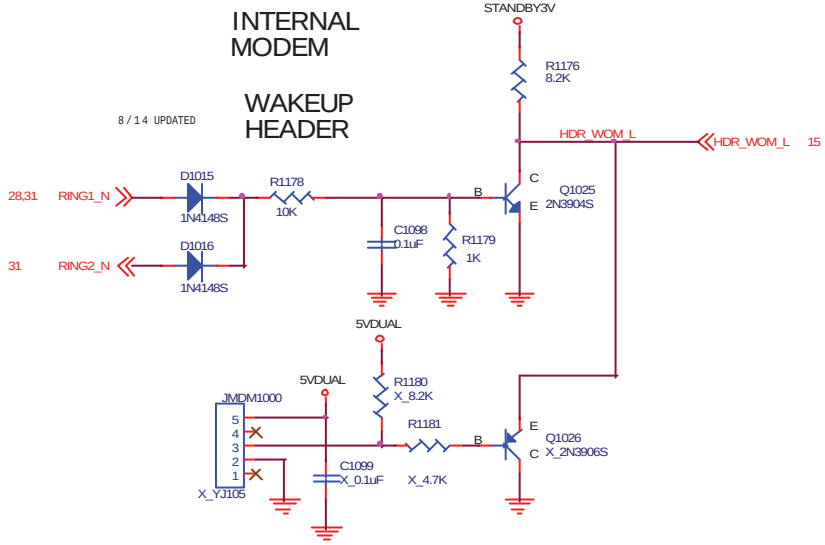

Disable On Board SCSI

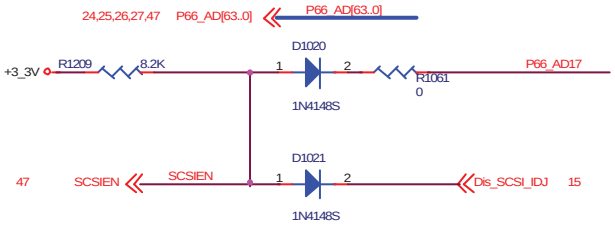

Wakeup On LAN Header

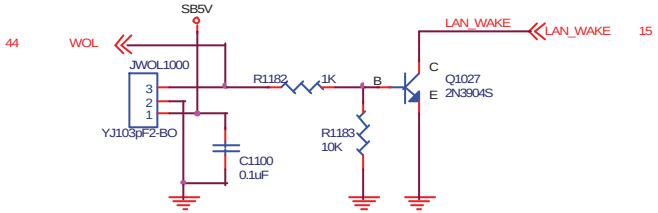

MS-6508-00B
0502_1 / 01

Micro Star Restricted Secret

Title	For IBM_2	Rev 0D
Document Number		
MICRO-STAR INT'L CO., LTD. No. 69, Li-De St, Jung-He City, Taipei Hsien, Taiwan http://www.msi.com.tw	Last Revision Date: Tuesday, May 22, 2001	
	Sheet 55 of 56	

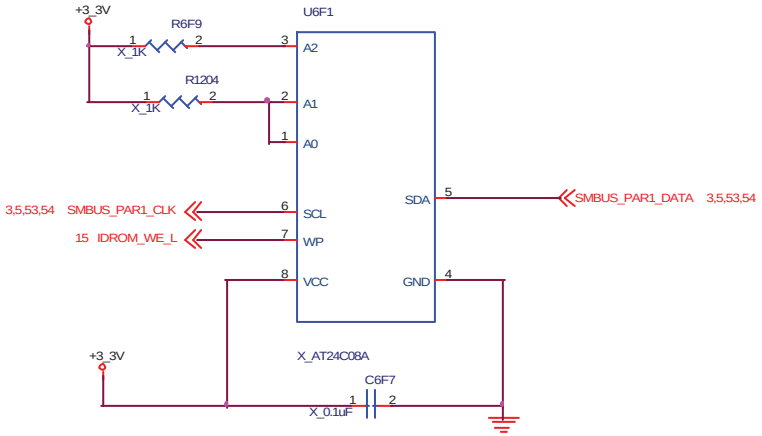

SMBUS ADDR : AC

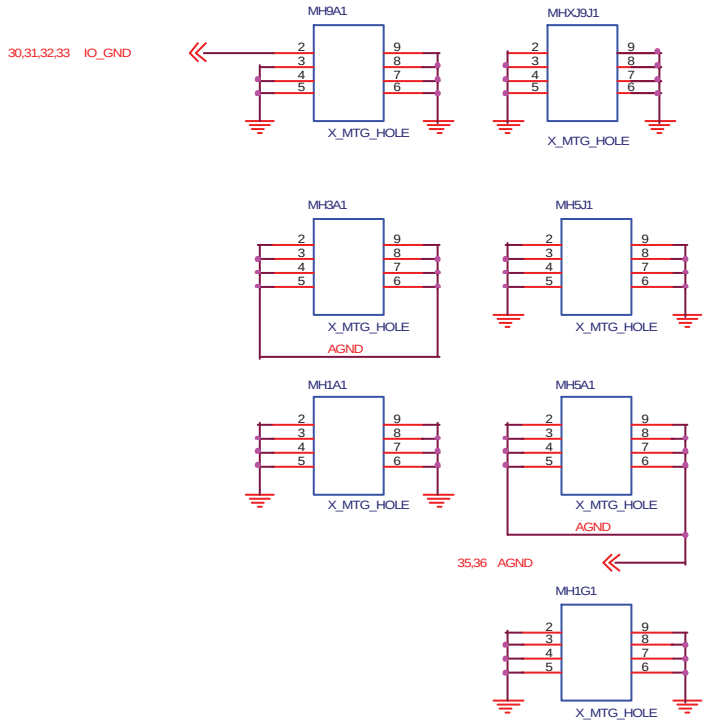

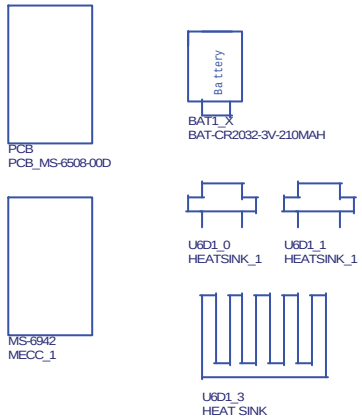

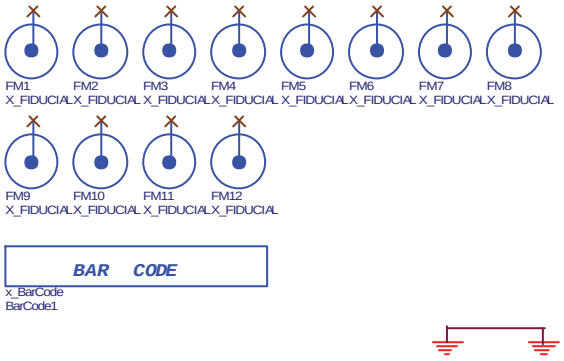

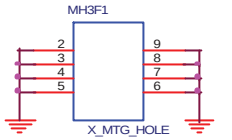

MS-6508-00B
0502_1 / 01

Micro Star Restricted Secret

Title	... ...	Rev
Document Number		0D
MICRO-STAR INT'L CO., LTD. No. 69, Li-De St, Jung-He City, Taipei Hsien, Taiwan http://www.msi.com.tw	Last Revision Date: Tuesday, May 22, 2001	
	Sheet 56 of 56	