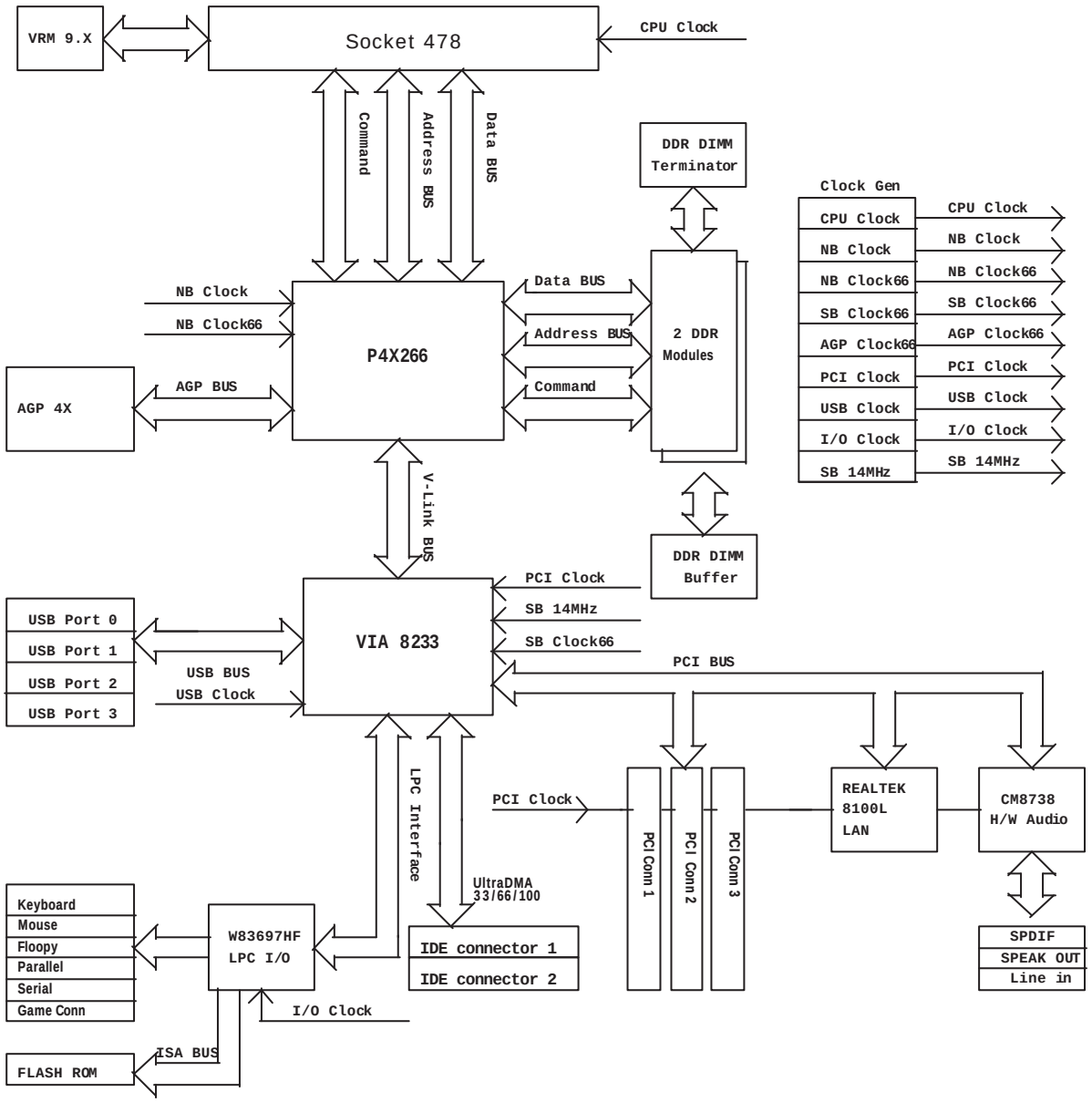

01-Block drigrame & Cover sheet
02-Power Delivery & GP I/O
03-Willamette 478 CPU part 1
04-Willamette 478 CPU part 2
05-Main Clock & DDR Clock buffer
06-VRM 9.X
07-P4X266 part 1 & 4
08-P4X266 part 2
09-P4X266 part 3
10-AGP slot & Pull-UP/DN resistor
11-DIMM 1 & 2
12-DDR terminator & regulator
13-VT8233 PART 1 & USB PORT
14-VT8233 part 2
15-VT8233 PART 3 & MS1
16-PCI slot 1 & 2 & 3
17-CM8738 H/W Audio controller
18-Audio Channel Selector & Connector
19-ATA66/100 CONNECTOR & KEYBOARD / MOUSE
20-Windbond W83697HF LPC I/O & Flash ROM.
21-Com/Parallel port
22-ATX POWER COM & FRONT PANEL
23-Main Power
24-Decouplibg capacitor
25-REALTEK 8100L LAN
26-PCB OTHER COMPONEMT
27-MAINAL

Title	{Title}	
Size	Document Number MS-6505	Rev 0B
Date: Wednesday, August 01, 2001	Sheet 1 of 27	

Power Delivery Map

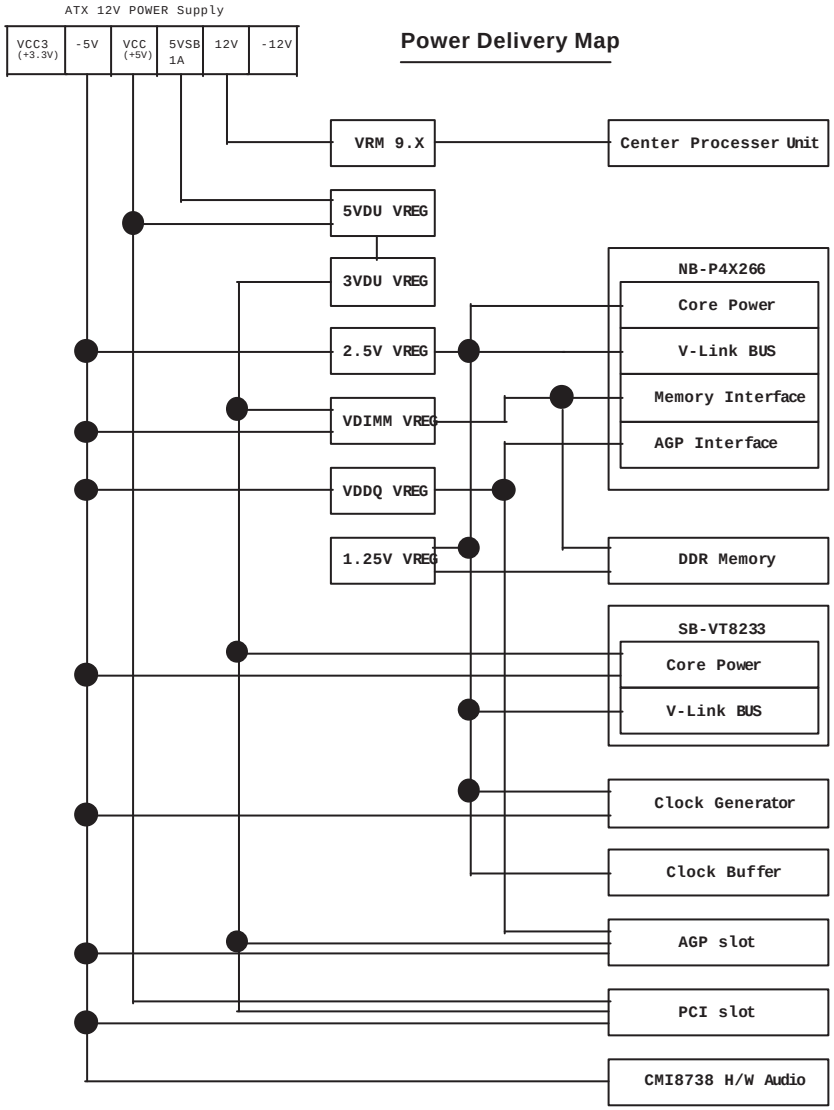

IRQ# Routing Table

AGP Slot	PIRQ#A	PIRQ#B			
PCI Slot 1	PIRQ#A	PIRQ#B	PIRQ#C	PIRQ#D	ID select= AD16
PCI Slot 2	PIRQ#B	PIRQ#C	PIRQ#D	PIRQ#A	ID select= AD17
PCI Slot 3	PIRQ#C	PIRQ#D	PIRQ#A	PIRQ#B	ID select= AD18
H/W Audio	PIRQ#D				ID select= AD23
REK-RTL8100	PIRQ#B				ID select= AD25

GPIO Table on SB-VT8233

GPO_0	Flash Rom protection Hi: Disable, Low: Enable
GPI_2	Sleep button
GPIO_8	IDE_1 mode detection
GPIO_9	IDE_2 mode detection
GPIO_10	LPC_PME#
GPIO_24	Diag-LED_1
GPIO_25	Diag-LED_2
GPIO_26	PCB version control
GPIO_27	PCB version control
GPIO_30	Diag-LED_3
GPIO_31	Diag-LED_4

GPIO Table on LPC I/O W83697

AUDIO : Hardware Audio controller installed

Chipset: VIA P4X266 + VT8233

LPC I/O: Winbond W83697EF

Flashrom: ISA Flashrom

Title	{Title}	
Size	Document Number MS-6505	Rev 0B
Date: Wednesday, August 01, 2001	Sheet 2 of 27	

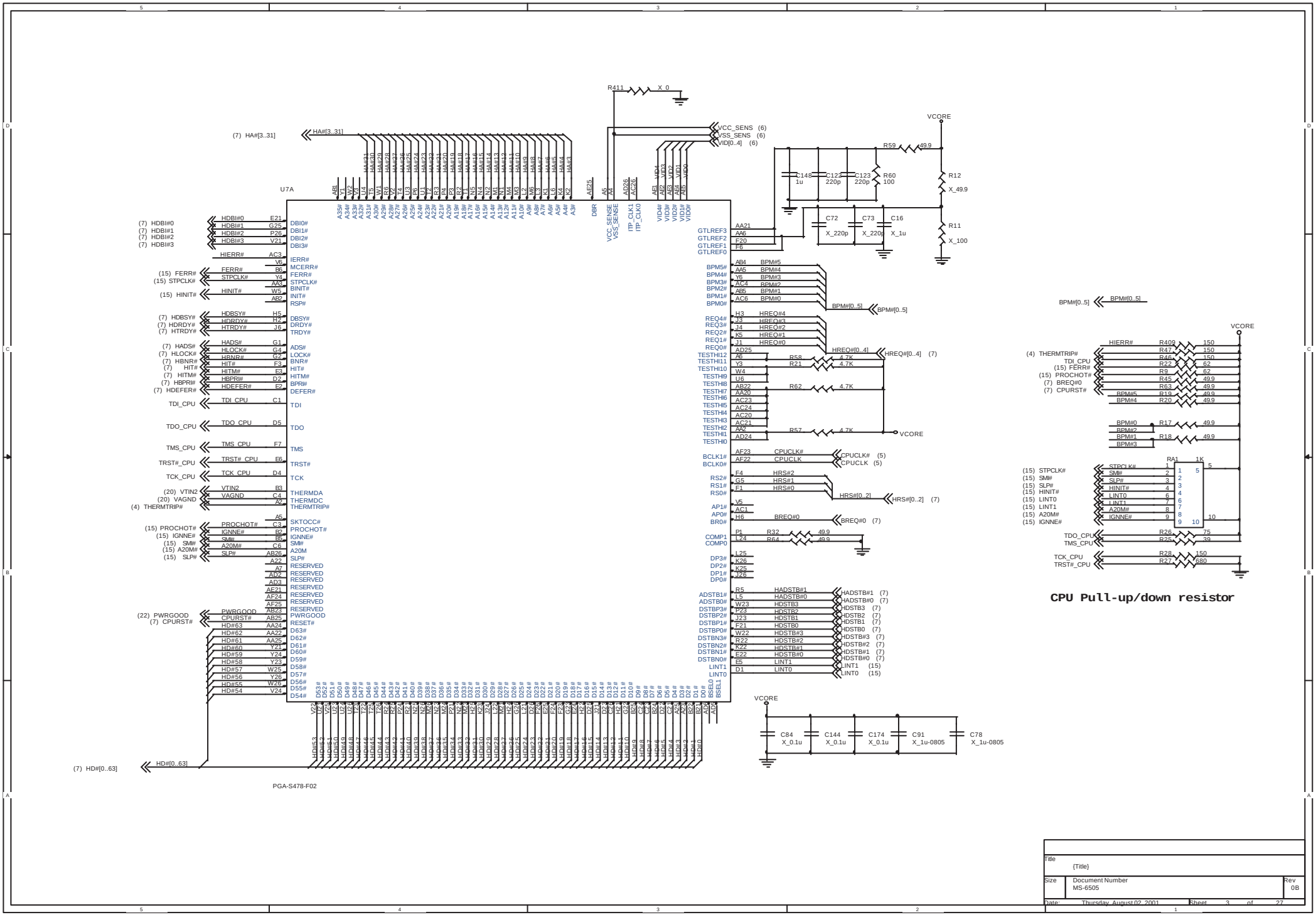
U7A
PGA-S478-F02
VCORE
R411 X_0
VCC_SENS (6)
VSS_SENS (6)
VID[0..4] (6)
R59 49.9
R60 100
R12 X_49.9
R11 X_100
C148 1u
C122 220p
C123 220p
C72 X_220p
C73 X_220p
C16 X_1u
C84 X_0.1u
C144 X_0.1u
C174 X_0.1u
C91 X_1u-0805
C78 X_1u-0805
(7) HA#[3..31]
HA#[3..31]
(7) HD#[0..63]
HD#[0..63]
(7) HDBI#0
(7) HDBI#1
(7) HDBI#2
(7) HDBI#3
(15) FERR#
(15) STPCLK#
(15) HINIT#
(7) HDBSY#
(7) HDRDY#
(7) HTRDY#
(7) HADS#
(7) HLOCK#
(7) HBNR#
(7) HIT#
(7) HITM#
(7) HBPR#
(7) HDEFER#
TDI_CPU
TDO_CPU
TMS_CPU
TRST#_CPU
TCK_CPU
(20) VTIN2
(20) VAGND
(4) THERMTRIP#
(15) PROCHOT#
(15) IGNNE#
(15) SMI#
(15) A20M#
(15) SLP#
(22) PWRGOOD
(7) CPURST#
BPM#[0..5]
HREQ#[0..4] (7)
HRS#[0..2] (7)
BREQ#0 (7)
CPUCLK# (5)
CPUCLK (5)
HADSTB#1 (7)
HADSTB#0 (7)
HDSTB3 (7)
HDSTB2 (7)
HDSTB1 (7)
HDSTB0 (7)
HDSTB#3 (7)
HDSTB#2 (7)
HDSTB#1 (7)
HDSTB#0 (7)
LINT1 (15)
LINT0 (15)
HIERR# R409 150
(4) THERMTRIP# R47 150
TDI_CPU R46 150
(15) FERR# R22 62
(15) PROCHOT# R9 62
(7) BREQ#0 R45 49.9
(7) CPURST# R63 49.9
BPM#5 R19 49.9
BPM#4 R20 49.9
BPM#0 R17 49.9
BPM#2
BPM#1 R18 49.9
BPM#3
RA1 1K
(15) STPCLK#
(15) SMI#
(15) SLP#
(15) HINIT#
(15) LINT0
(15) LINT1
(15) A20M#
(15) IGNNE#
TDO_CPU R26 75
TMS_CPU R25 39
TCK_CPU R28 150
TRST#_CPU R27 680
CPU Pull-up/down resistor
Title
{Title}
Size
Document Number
MS-6505
Rev
0B
Date: Thursday, August 02, 2001
Sheet 3 of 27

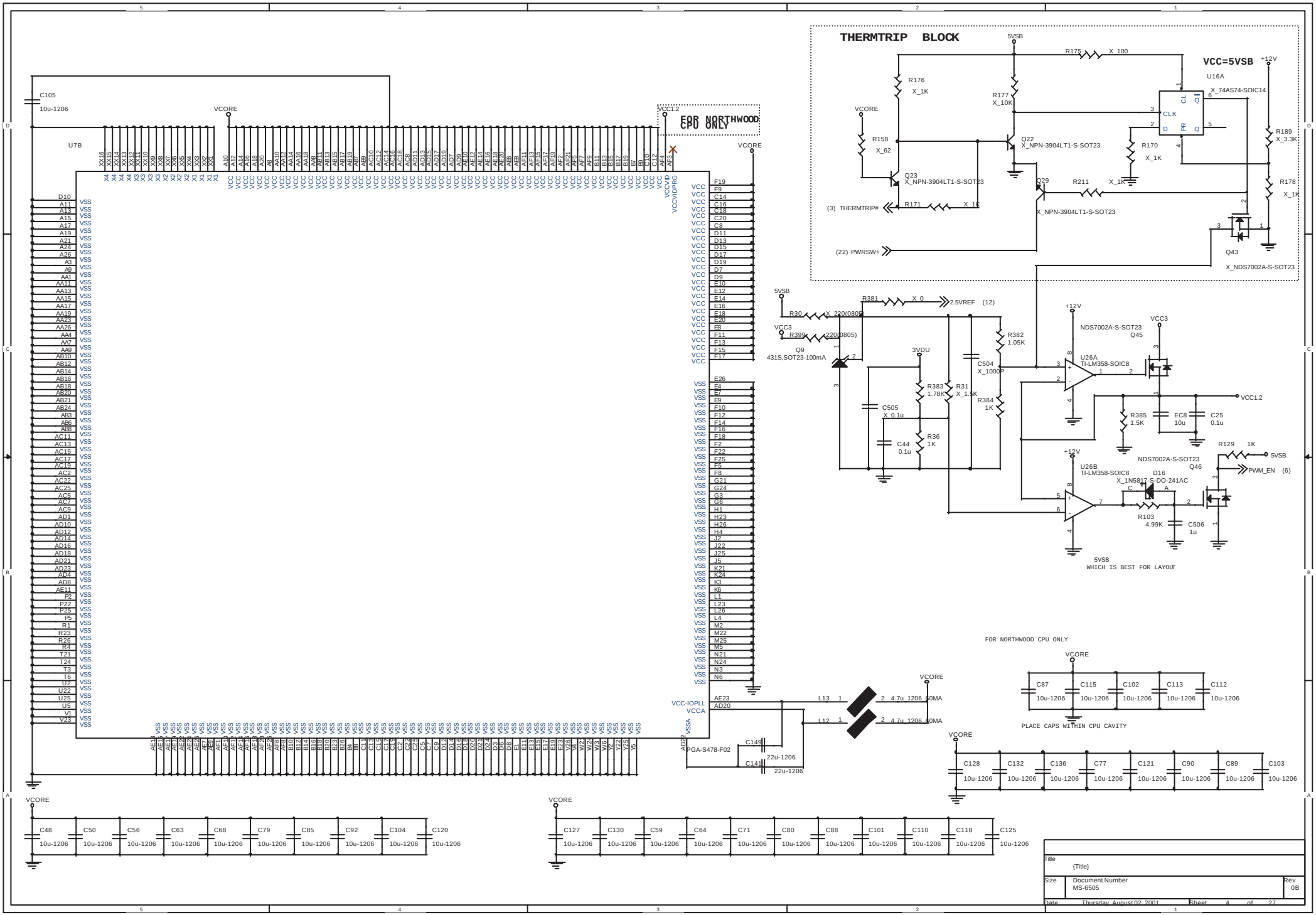
THERMTRIP BLOCK
VCC=5VSB
U16A
X_74AS74-SOIC14
R175 X_100
R176 X_1K
R177 X_10K
R158 X_62
Q22 X_NPN-3904LT1-S-SOT23
Q23 X_NPN-3904LT1-S-SOT23
Q29 X_NPN-3904LT1-S-SOT23
R211 X_1K
R170 X_1K
R189 X_3.3K
R178 X_1K
R171 X_1K
(3) THERMTRIP#
(22) PWRSW+
Q43 X_NDS7002A-S-SOT23
U7B
C105 10u-1206
VCORE
VCC1.2
FOR NORTHWOOD CPU ONLY
PGA-S478-F02
R381 X_0
2.5VREF (12)
R30 X_220(0805)
R399 2200(0805)
Q9 431S,SOT23-100mA
R382 1.05K
C504 X_1000P
R383 1.78K
R31 X_1.5K
R384 1K
C505 X_0.1u
C44 0.1u
R36 1K
U26A TI-LM358-SOIC8
NDS7002A-S-SOT23 Q45
R385 1.5K
EC8 10u
C25 0.1u
U26B TI-LM358-SOIC8
NDS7002A-S-SOT23 Q46
D16 X_1N5817-S-DO-241AC
R103 4.99K
C506 1u
R129 1K
PWM_EN (6)
5VSB WHICH IS BEST FOR LAYOUT
L13 4.7u 1206 60MA
L12 4.7u 1206 60MA
C149 22u-1206
C141 22u-1206
FOR NORTHWOOD CPU ONLY
C87 C115 C102 C113 C112 10u-1206
PLACE CAPS WITHIN CPU CAVITY
C128 C132 C136 C77 C121 C90 C89 C103 10u-1206
C48 C50 C56 C63 C68 C79 C85 C92 C104 C120 10u-1206
C127 C130 C59 C64 C71 C80 C88 C101 C110 C118 C125 10u-1206
Title {Title}
Size Document Number MS-6505 Rev 0B
Date: Thursday, August 02, 2001 Sheet 4 of 27

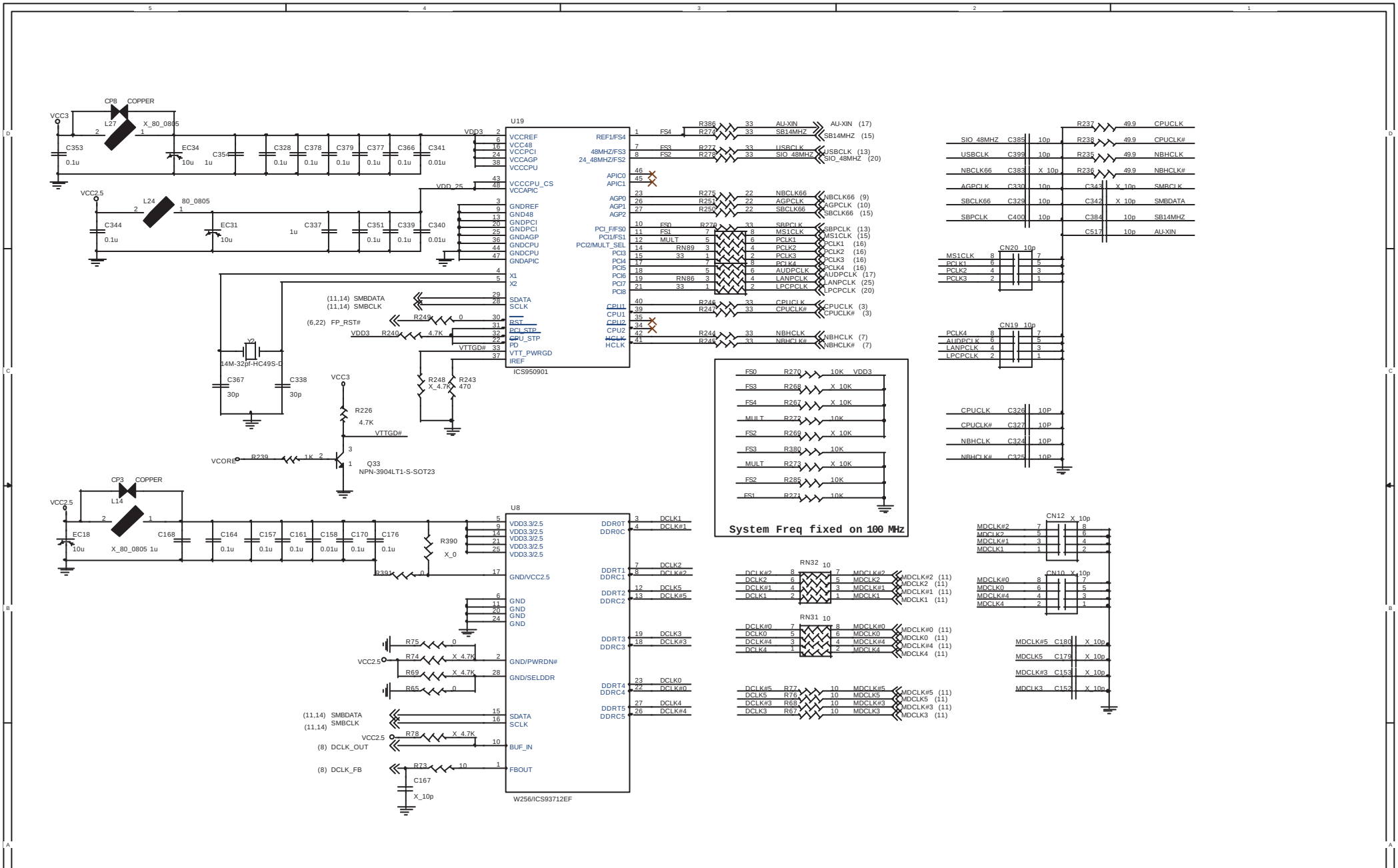

Title
{Title}

Size	Document Number	Rev
	MS-6505	0B

Date: Thursday, August 02, 2001 Sheet 5 of 27

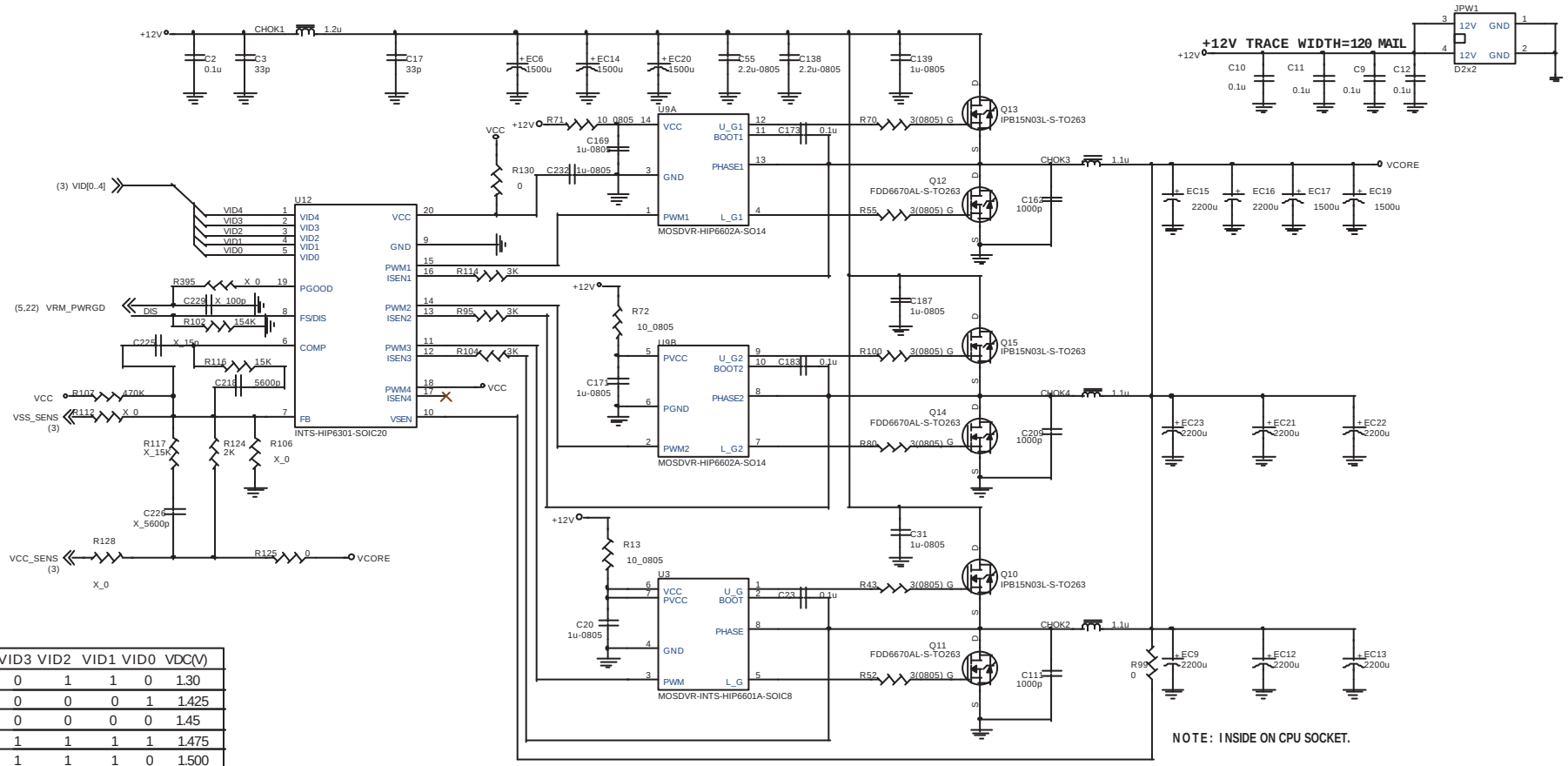

VID4	VID3	VID2	VID1	VID0	VDC(V)
1	0	1	1	0	1.30
1	0	0	0	1	1.425
1	0	0	0	0	1.45
0	1	1	1	1	1.475
0	1	1	1	0	1.500
0	1	1	0	1	1.525
0	1	1	0	0	1.550
0	1	0	1	1	1.575
0	1	0	1	0	1.600
0	1	0	0	1	1.625

VID4	VID3	VID2	VID1	VID0	VDC(V)
0	1	0	0	0	1.650
0	0	1	1	1	1.675
0	0	1	1	0	1.70
0	0	1	0	1	1.725
0	0	1	0	0	1.75
0	0	0	1	1	1.775
0	0	0	1	0	1.80
0	0	0	0	1	1.825
0	0	0	0	0	1.85
1	1	1	1	1	OFF

Title	{Title}	
Size	Document Number MS-6505	Rev 0B
Date: Thursday, August 02, 2001	Sheet 6 of 27	

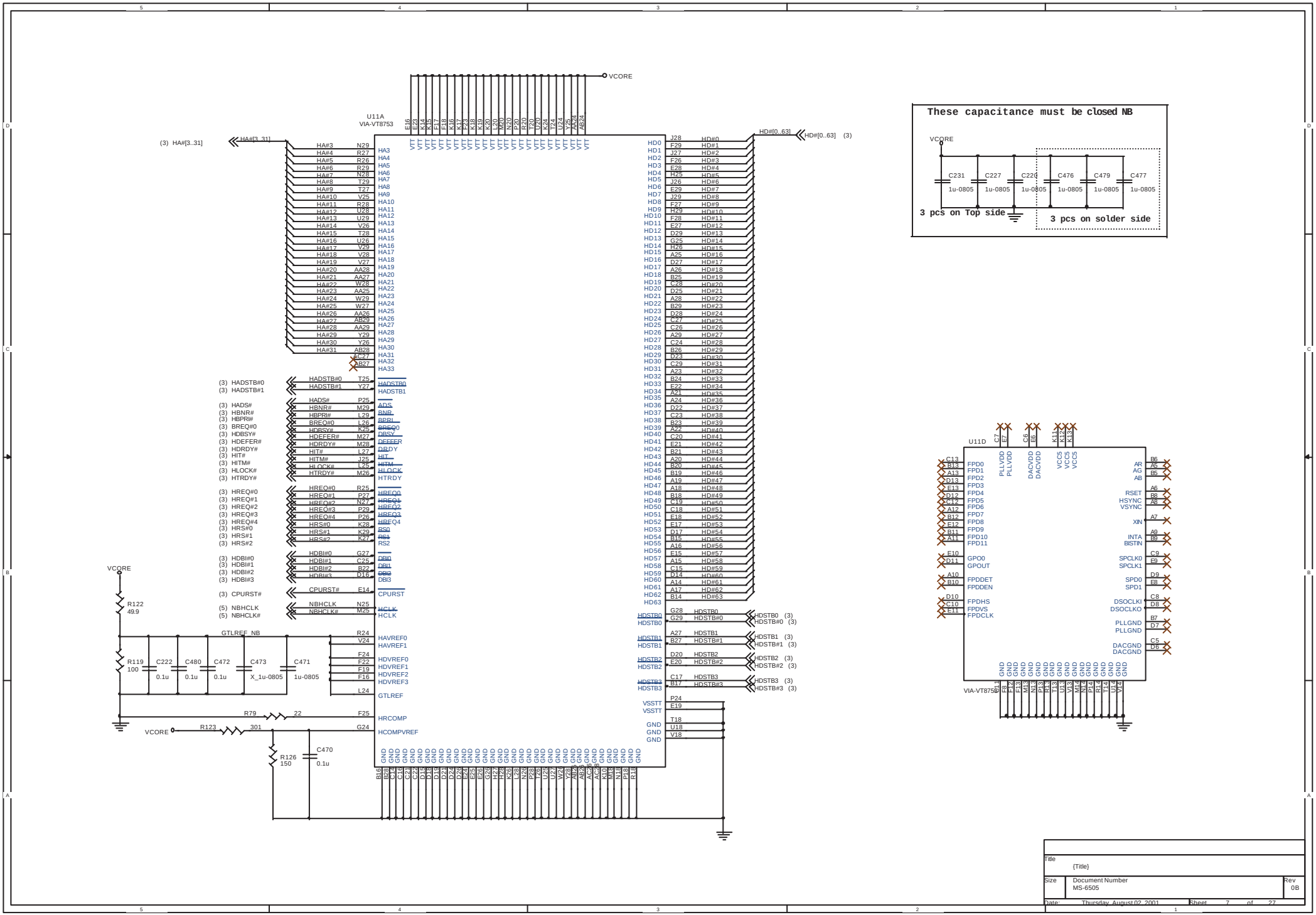

Title
{Title}

Size	Document Number	Rev
	MS-6505	0B

Date: Thursday, August 02, 2001 Sheet 7 of 27

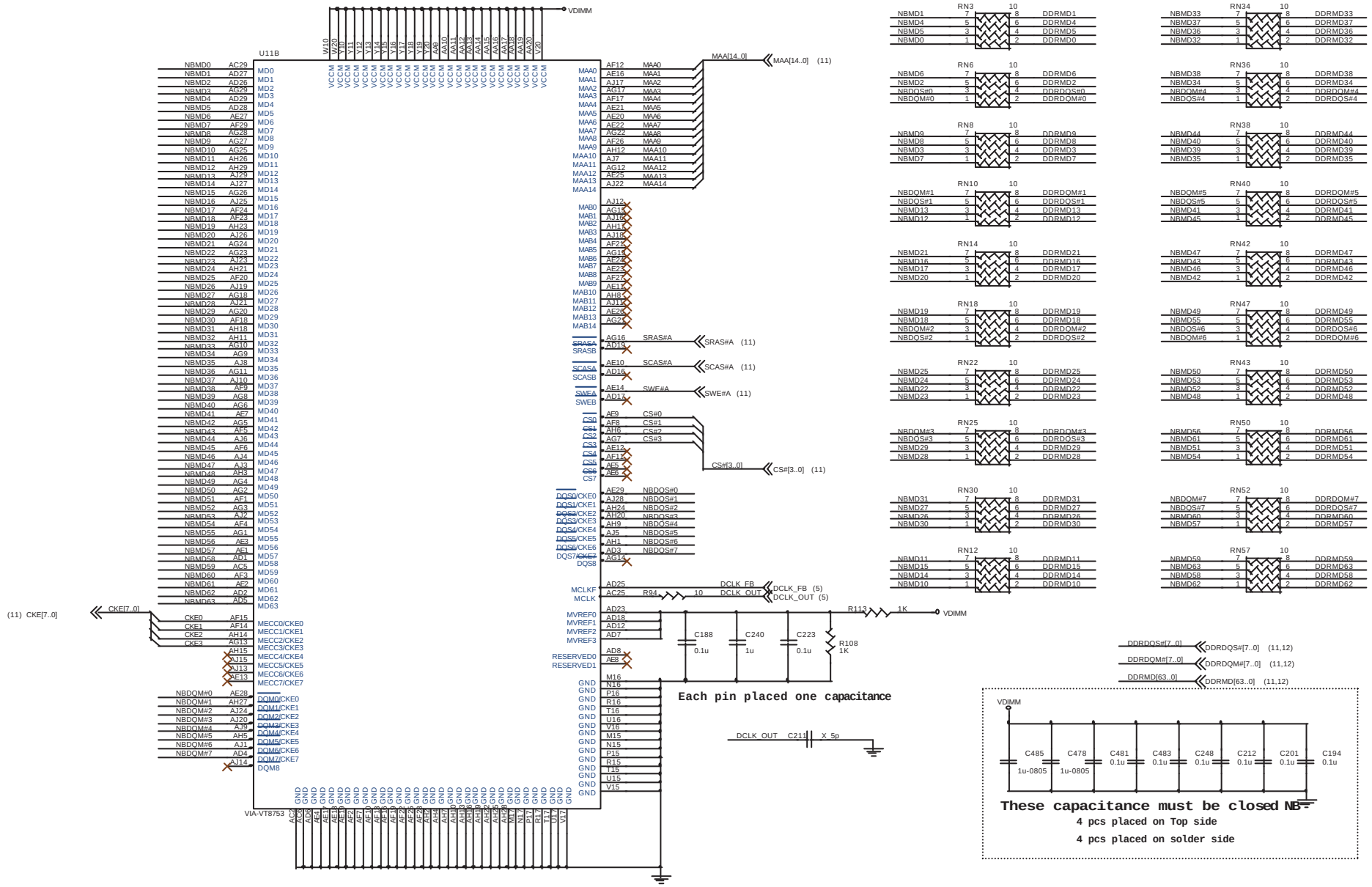

Title	{Title}
Size	Document Number MS-6505
Rev	0B
Date:	Thursday, August 02, 2001
Sheet	8 of 27

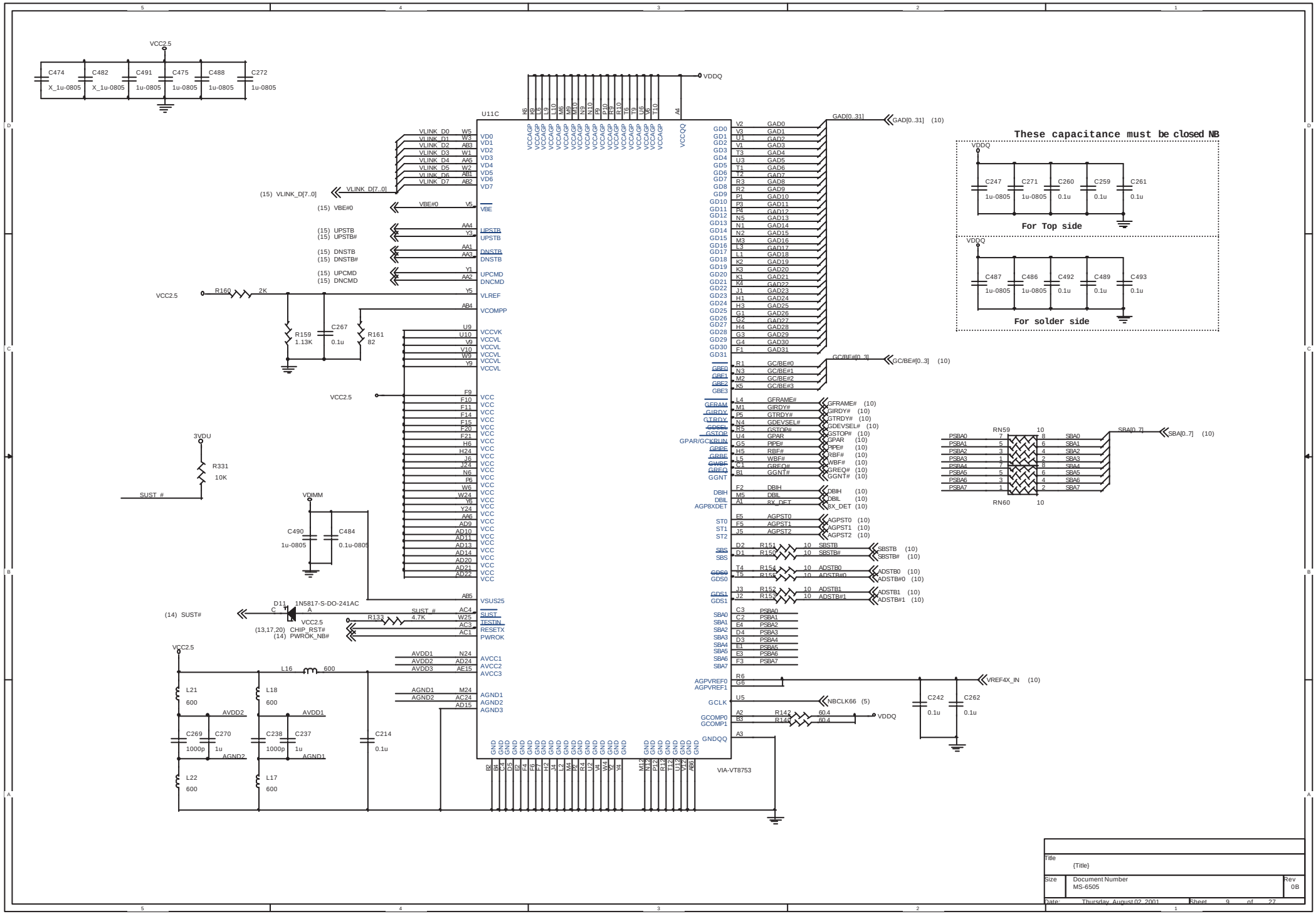
VCC2.5
C474 X_1u-0805
C482 X_1u-0805
C491 1u-0805
C475 1u-0805
C488 1u-0805
C272 1u-0805
VDDQ
U11C
VIA-VT8753
VLINK_D[7..0]
VBE#0
UPSTB
UPSTB#
DNSTB
DNSTB#
UPCMD
DNCMD
VLREF
VCOMPP
R160 2K
R159 1.13K
C267 0.1u
R161 82
VCCVK
VCCVL
VCC
3VDU
R331 10K
SUST_#
VDIMM
C490 1u-0805
C484 0.1u-0805
D11 1N5817-S-DO-241AC
VSUS25
SUST_#
TESTIN
RESETX
PWROK
R133 4.7K
(14) SUST#
(13,17,20) CHIP_RST#
(14) PWROK_NB#
AVCC1
AVCC2
AVCC3
AGND1
AGND2
AGND3
L16 600
L21 600
L18 600
L22 600
L17 600
C269 1000p
C270 1u
C238 1000p
C237 1u
C214 0.1u
GAD[0..31]
GC/BE#[0..3]
GFRAME#
GIRDY#
GTRDY#
GDEVSEL#
GSTOP#
GPAR
PIPE#
RBF#
WBF#
GREQ#
GGNT#
DBIH
DBIL
8X_DET
AGPST0
AGPST1
AGPST2
SBSTB
SBSTB#
ADSTB0
ADSTB#0
ADSTB1
ADSTB#1
PSBA0
PSBA1
PSBA2
PSBA3
PSBA4
PSBA5
PSBA6
PSBA7
AGPVREF0
AGPVREF1
GCLK
NBCLK66 (5)
GCOMP0
GCOMP1
R142 60.4
R143 60.4
GNDQQ
VREF4X_IN (10)
C242 0.1u
C262 0.1u
RN59
RN60
SBA[0..7]
These capacitance must be closed NB
C247 1u-0805
C271 1u-0805
C260 0.1u
C259 0.1u
C261 0.1u
For Top side
C487 1u-0805
C486 1u-0805
C492 0.1u
C489 0.1u
C493 0.1u
For solder side
Title
{Title}
Size
Document Number
MS-6505
Rev
0B
Date: Thursday, August 02, 2001
Sheet 9 of 27

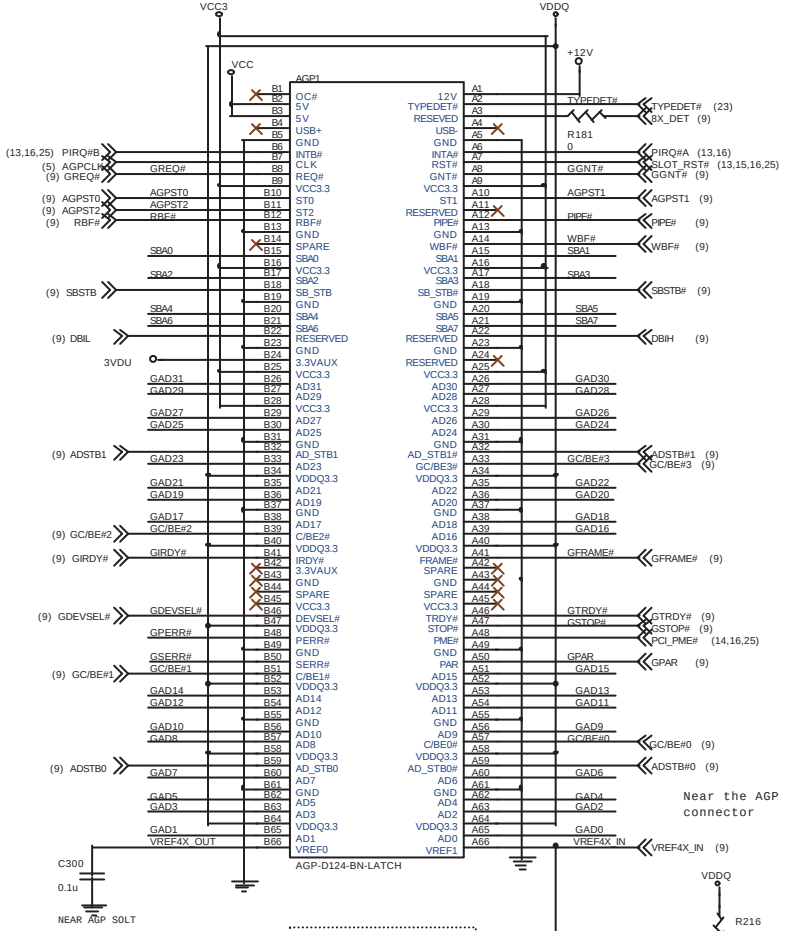

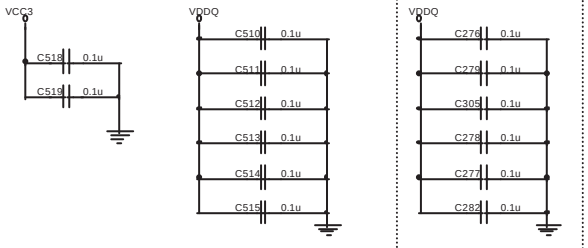

Closed to AGP slot

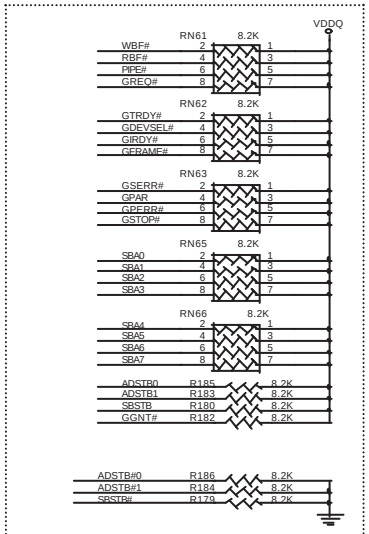

AGP Pull-up/down resistor

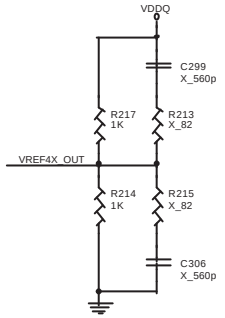

CLOSED TO AGP SLOT

Title	{Title}	
Size	Document Number MS-6505	Rev 0B
Date: Thursday, August 02, 2001	Sheet 10 of 27	

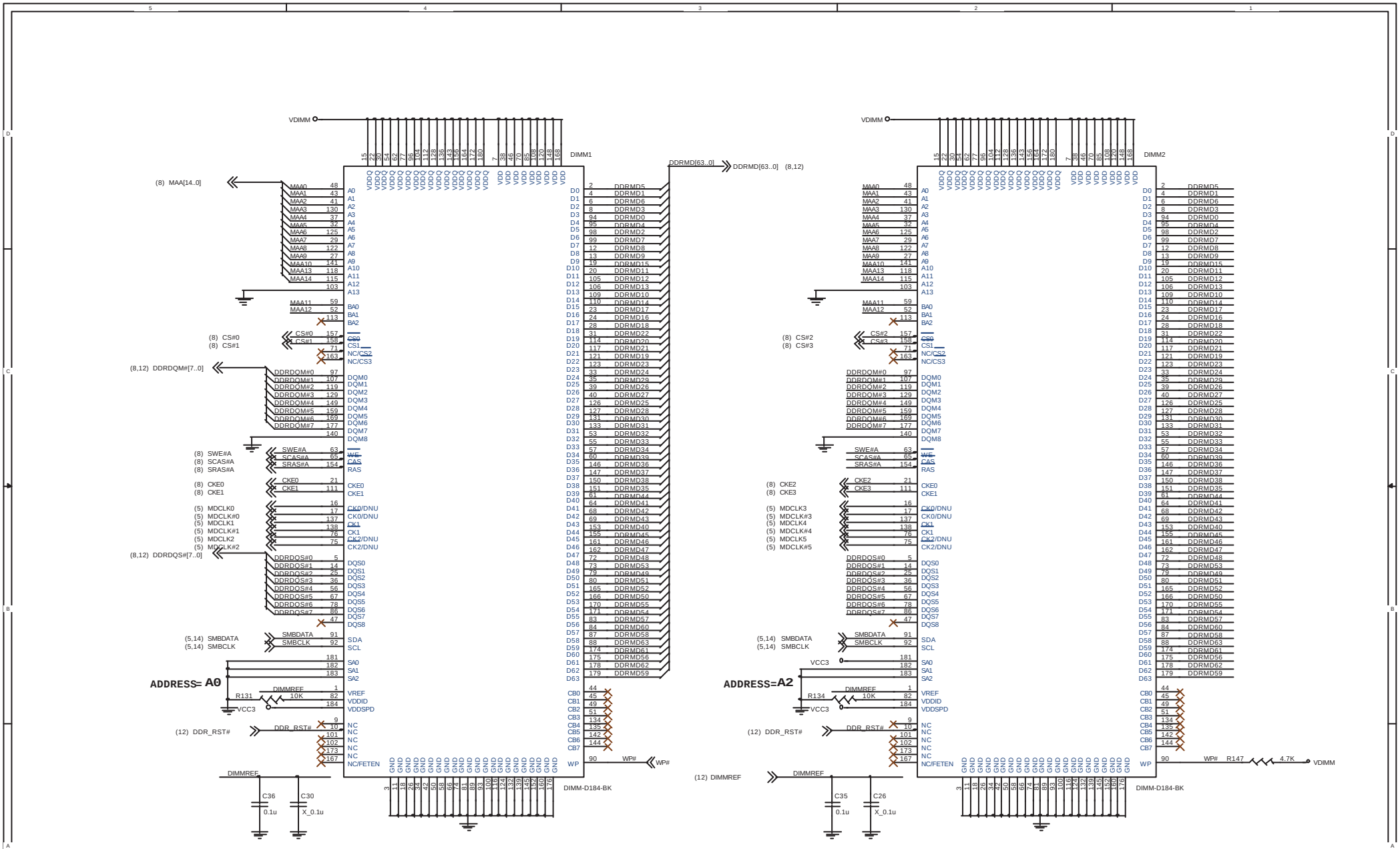

Title	{Title}	
Size	Document Number MS-6505	Rev 0B
Date: Thursday, August 02, 2001	Sheet 11 of 27	

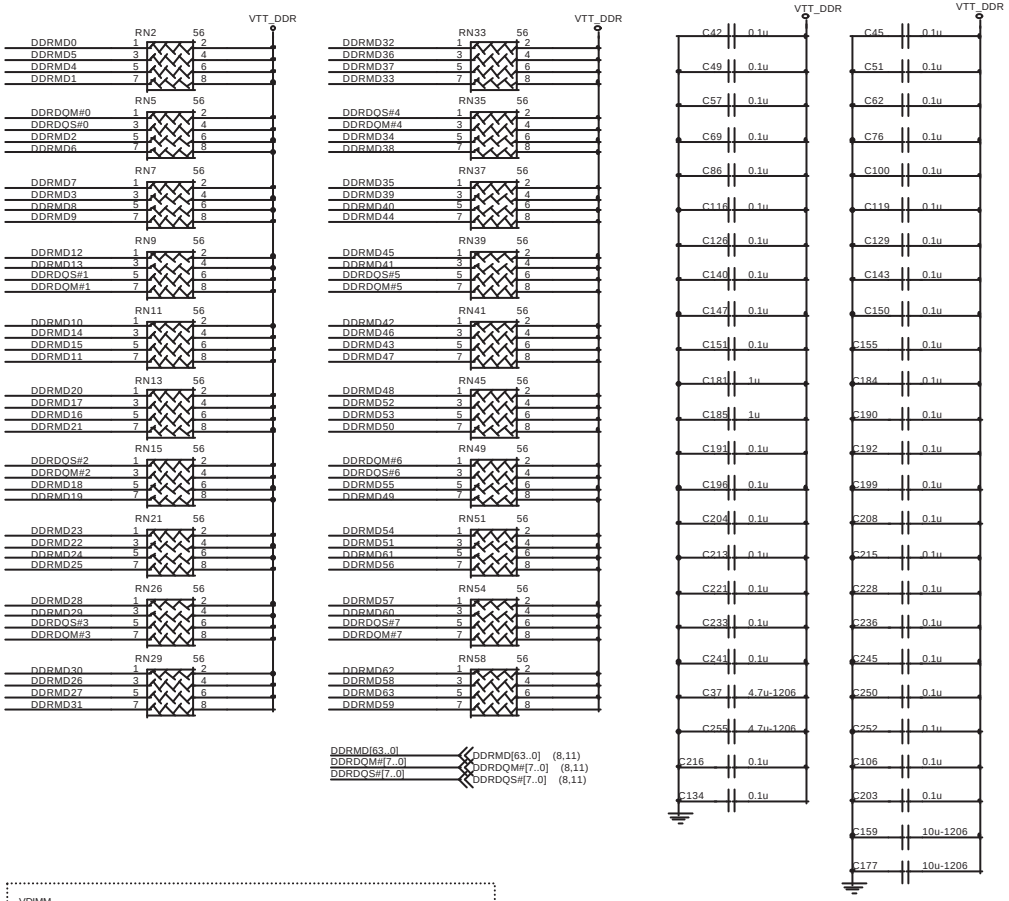

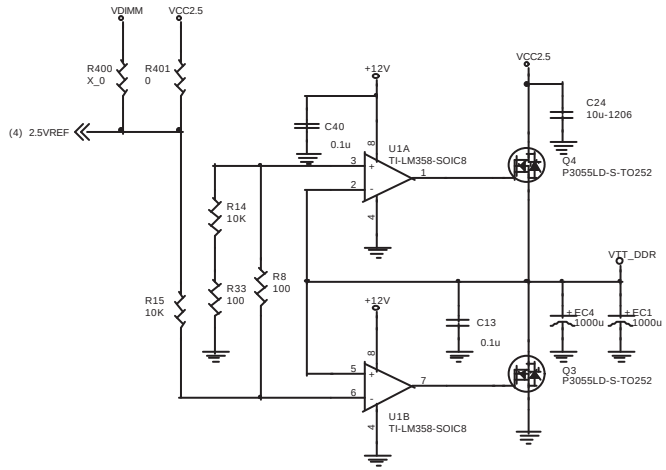

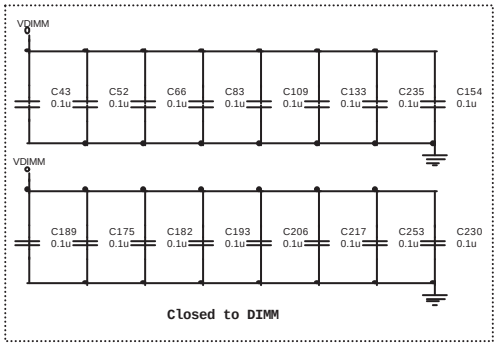

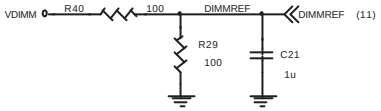

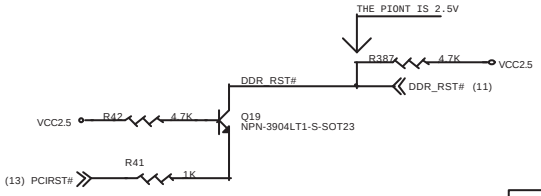

Title	{Title}	
Size	Document Number MS-6505	Rev 0B
Date: Thursday, August 02, 2001	Sheet 12 of 27	

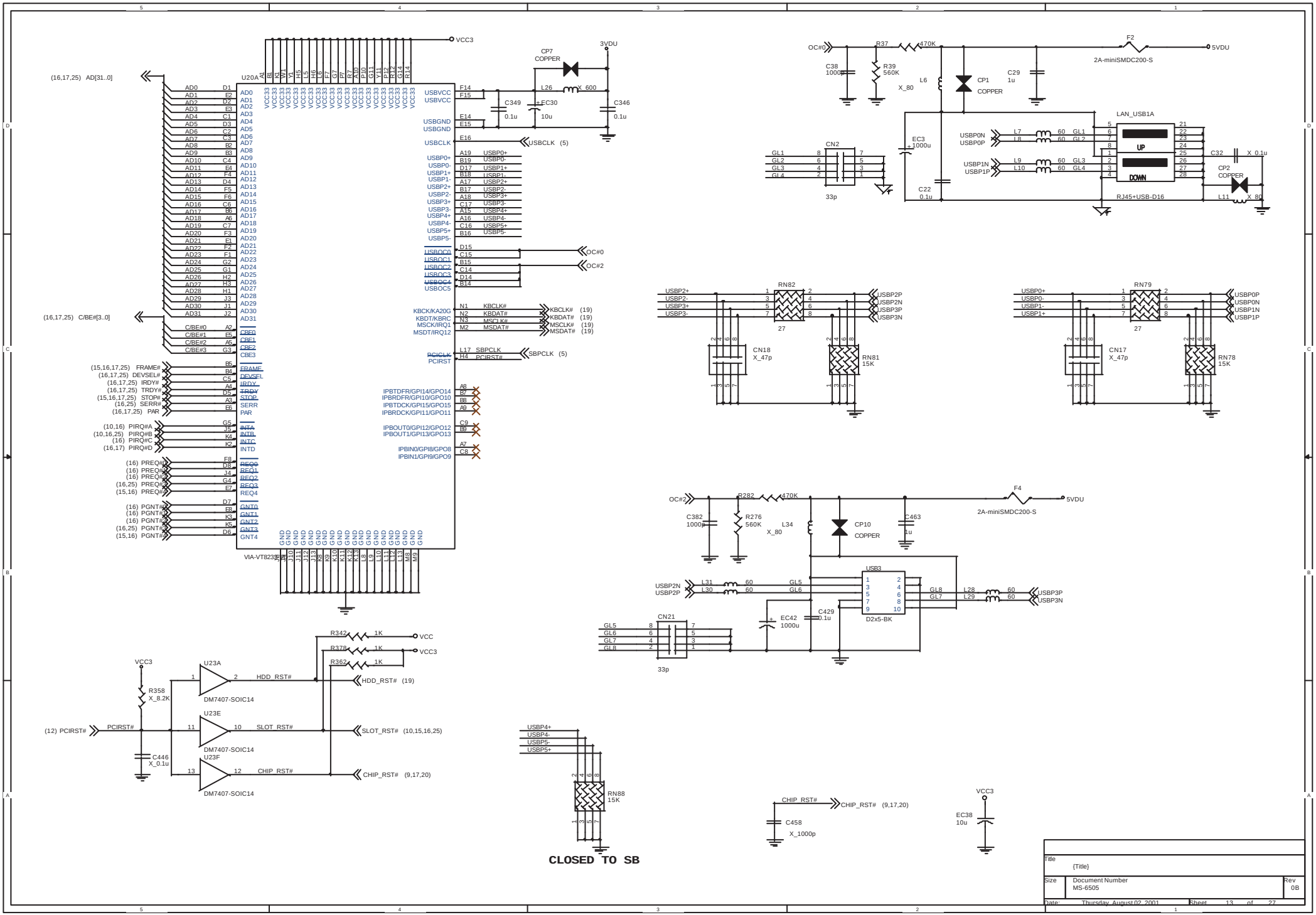

Title {Title}

Size | Document Number MS-6505 | Rev 0B

Date: Thursday, August 02, 2001 | Sheet 13 of 27

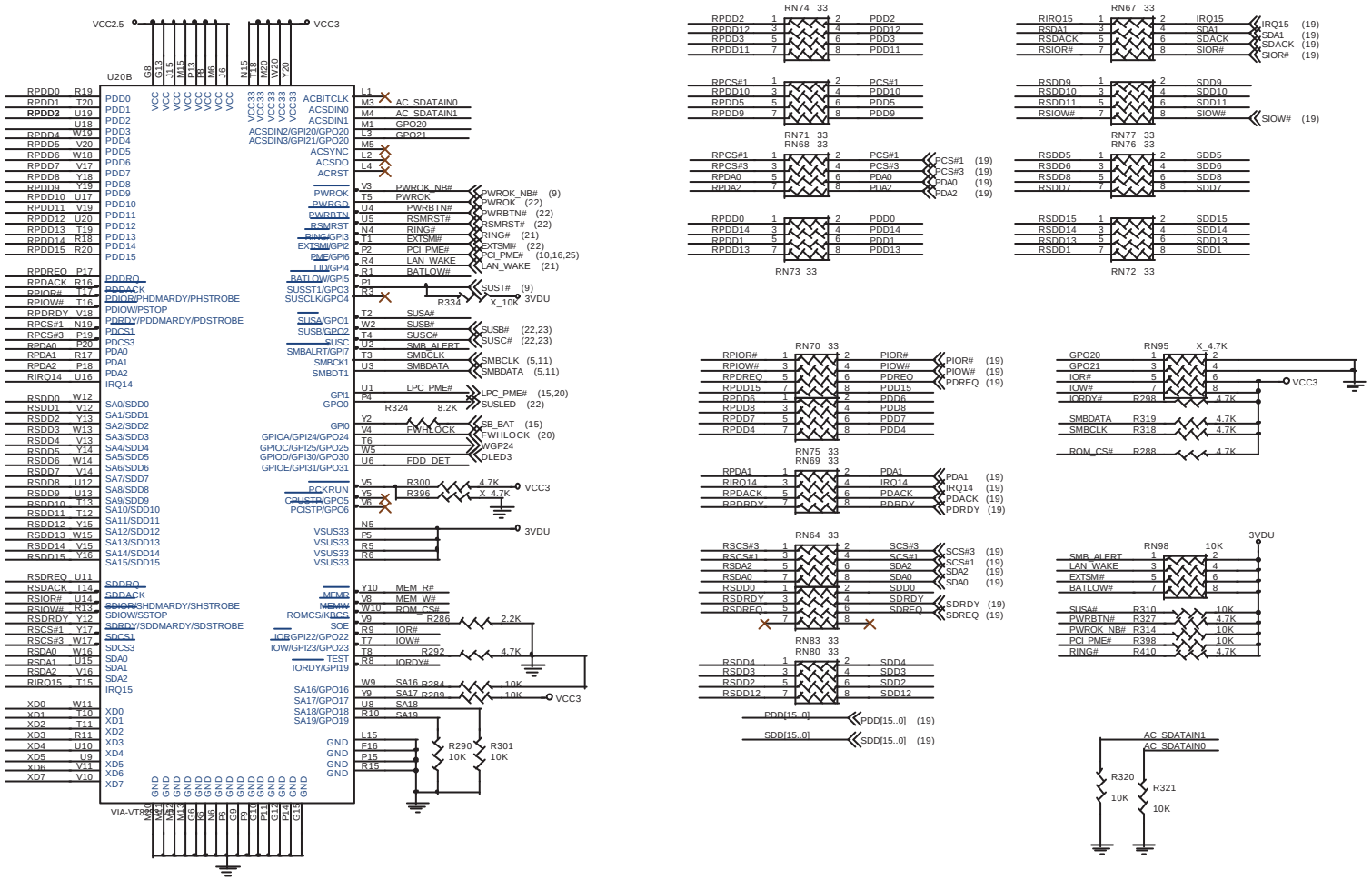

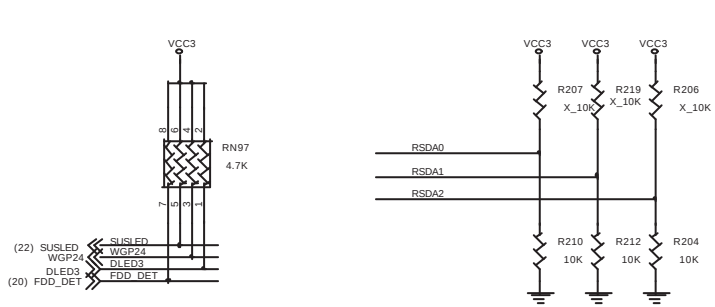

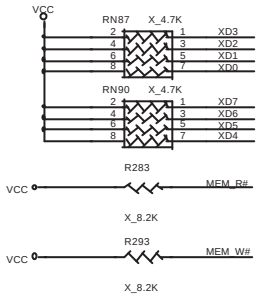

Title	{Title}	
Size	Document Number MS-6505	Rev 0A
Date: Thursday, August 02, 2001	Sheet 14 of 26	

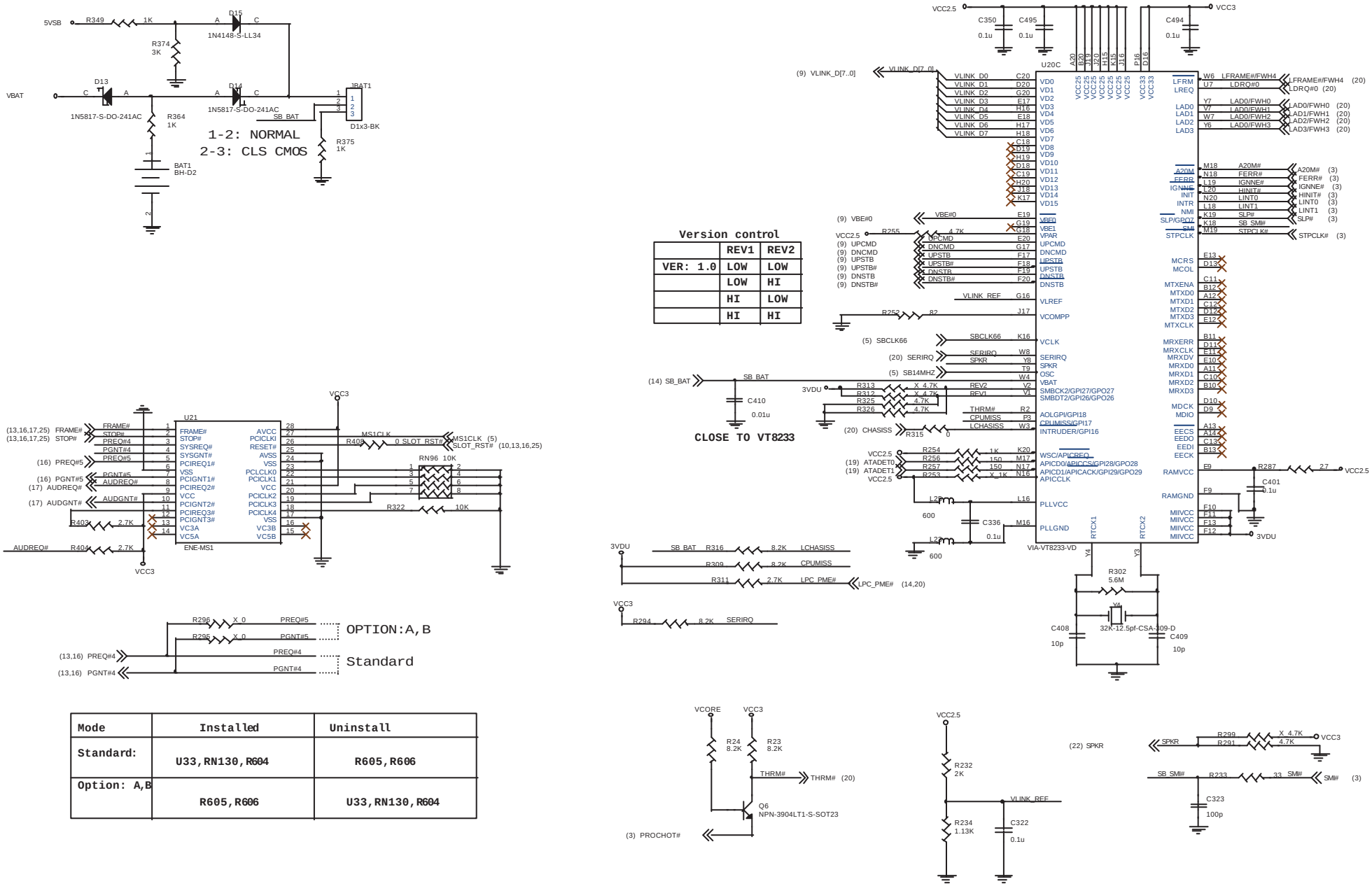

Mode	Installed	Uninstall
Standard:	U33,RN130,R604	R605,R606
Option: A,B	R605,R606	U33,RN130,R604

Title {Title}

Size | Document Number MS-6505 | Rev 0A

Date: Thursday, August 02, 2001 | Sheet 15 of 26

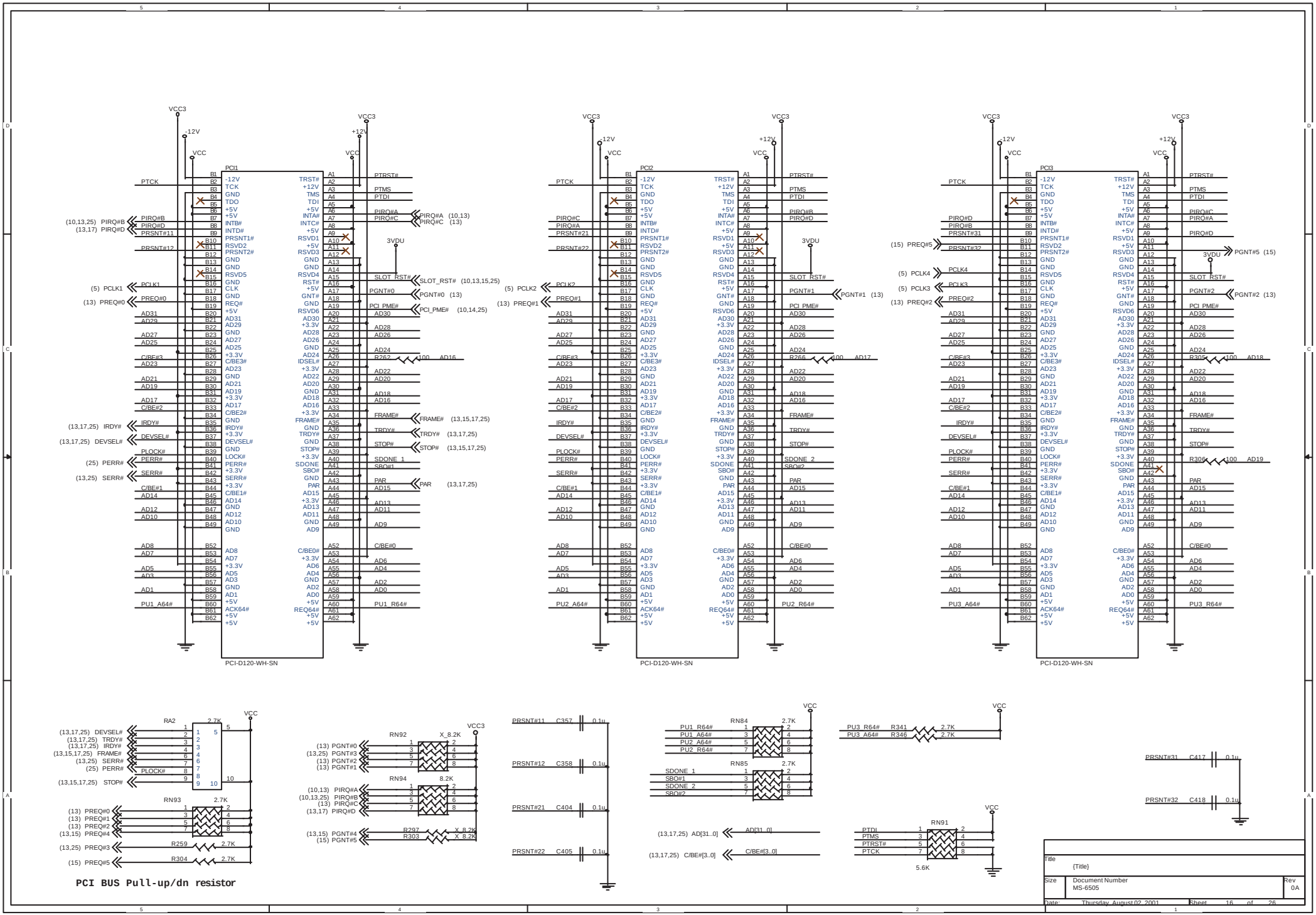
PCI1
PCI2
PCI3
PCI-D120-WH-SN
PCI BUS Pull-up/dn resistor
RA2
RN92
RN93
RN94
RN84
RN85
RN91
PRSNT#11 C357 0.1u
PRSNT#12 C358 0.1u
PRSNT#21 C404 0.1u
PRSNT#22 C405 0.1u
PRSNT#31 C417 0.1u
PRSNT#32 C418 0.1u
Title
{Title}
Size
Document Number
MS-6505
Rev
0A
Date: Thursday, August 02, 2001
Sheet 16 of 26

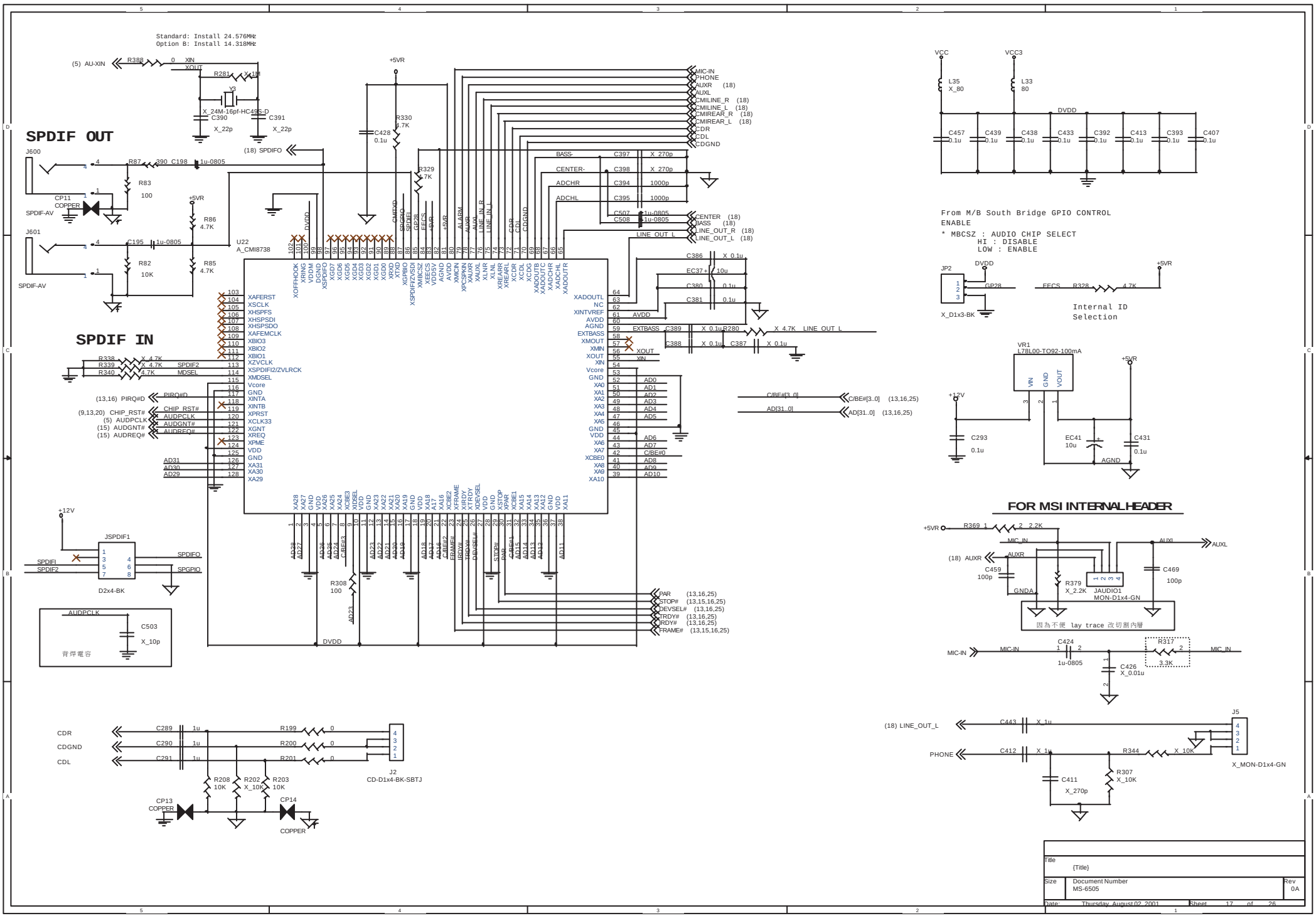
Standard: Install 24.576MHz
Option B: Install 14.318MHz
SPDIF OUT
SPDIF IN
U22
A_CMI8738
FOR MSI INTERNAL HEADER
From M/B South Bridge GPIO CONTROL
ENABLE
* MBCSZ : AUDIO CHIP SELECT
HI : DISABLE
LOW : ENABLE
Internal ID
Selection
背焊電容
因為不便 lay trace 改切割內層
Title
{Title}
Size
Document Number
MS-6505
Rev
0A
Date: Thursday, August 02, 2001
Sheet 17 of 26

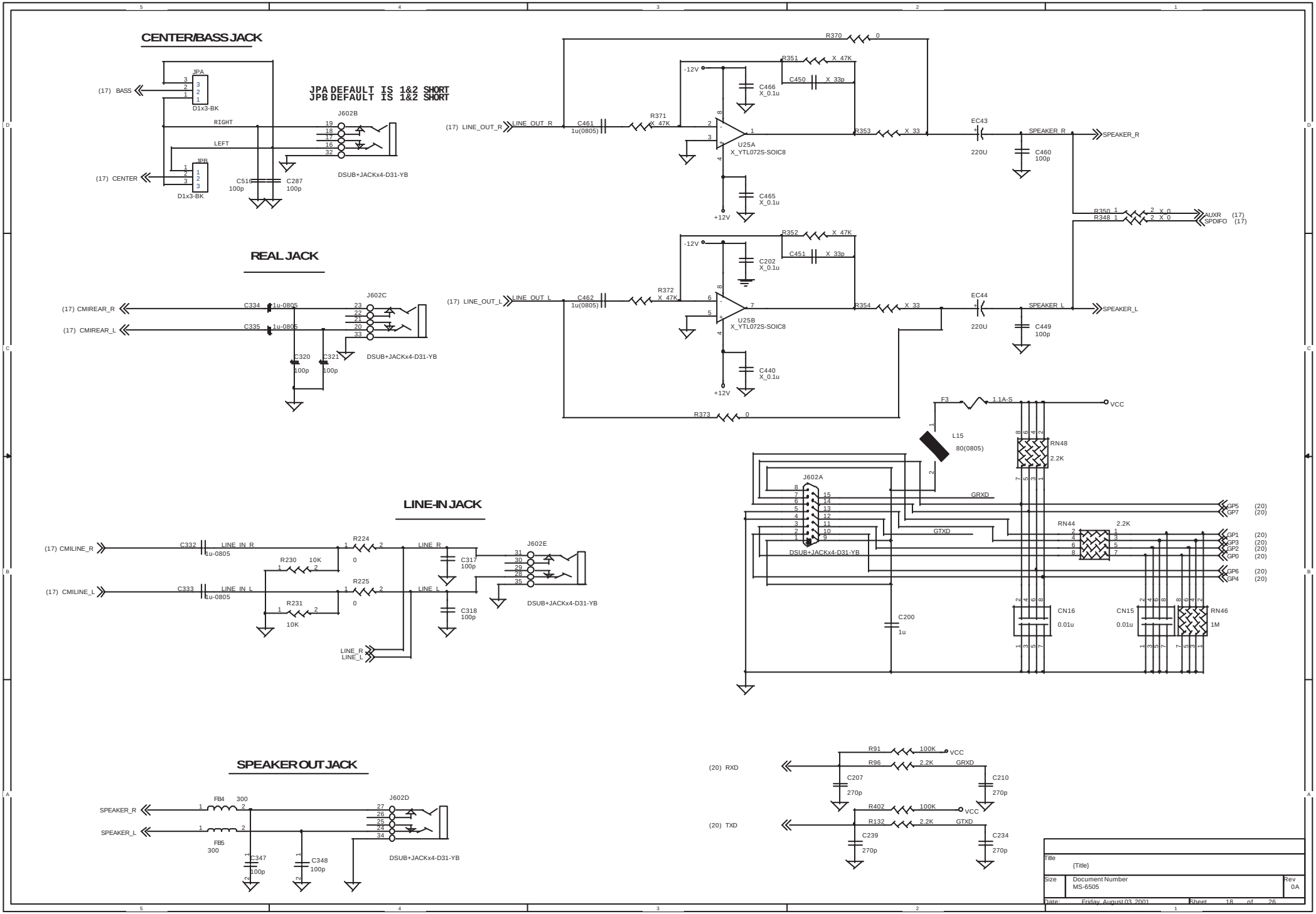
CENTER/BASS JACK
JPA DEFAULT IS 1&2 SHORT
JPB DEFAULT IS 1&2 SHORT
(17) BASS
(17) CENTER
JPA
JPB
D1x3-BK
RIGHT
LEFT
J602B
DSUB+JACKx4-D31-YB
C516 100p
C287 100p
REAL JACK
(17) CMIREAR_R
(17) CMIREAR_L
C334 1u-0805
C335 1u-0805
J602C
C320 100p
C321 100p
DSUB+JACKx4-D31-YB
LINE-IN JACK
(17) CMILINE_R
(17) CMILINE_L
C332 1u-0805
C333 1u-0805
LINE_IN_R
LINE_IN_L
R224 0
R225 0
R230 10K
R231 10K
LINE_R
LINE_L
C317 100p
C318 100p
J602E
DSUB+JACKx4-D31-YB
SPEAKER OUT JACK
SPEAKER_R
SPEAKER_L
FB4 300
FB5 300
C347 100p
C348 100p
J602D
DSUB+JACKx4-D31-YB
(17) LINE_OUT_R
LINE_OUT_R
C461 1u(0805)
R371 X_47K
R370 0
R351 X_47K
C450 X_33p
-12V
C466 X_0.1u
U25A X_YTL072S-SOIC8
C465 X_0.1u
+12V
R353 X_33
EC43 220U
SPEAKER_R
C460 100p
SPEAKER_R
R350 1 2 X_0
R348 1 2 X_0
AUXR (17)
SPDIFO (17)
(17) LINE_OUT_L
LINE_OUT_L
C462 1u(0805)
R372 X_47K
R352 X_47K
C451 X_33p
C202 X_0.1u
U25B X_YTL072S-SOIC8
C440 X_0.1u
R354 X_33
EC44 220U
SPEAKER_L
C449 100p
SPEAKER_L
R373 0
F3 1.1A-S
VCC
L15 80(0805)
RN48 2.2K
J602A
DSUB+JACKx4-D31-YB
GRXD
GTXD
RN44 2.2K
GP5 (20)
GP7 (20)
GP1 (20)
GP3 (20)
GP2 (20)
GP0 (20)
GP6 (20)
GP4 (20)
C200 1u
CN16 0.01u
CN15 0.01u
RN46 1M
(20) RXD
(20) TXD
R91 100K
R96 2.2K
R402 100K
R132 2.2K
C207 270p
C210 270p
C239 270p
C234 270p
Title
{Title}
Size
Document Number
MS-6505
Rev
0A
Date: Friday, August 03, 2001
Sheet 18 of 26

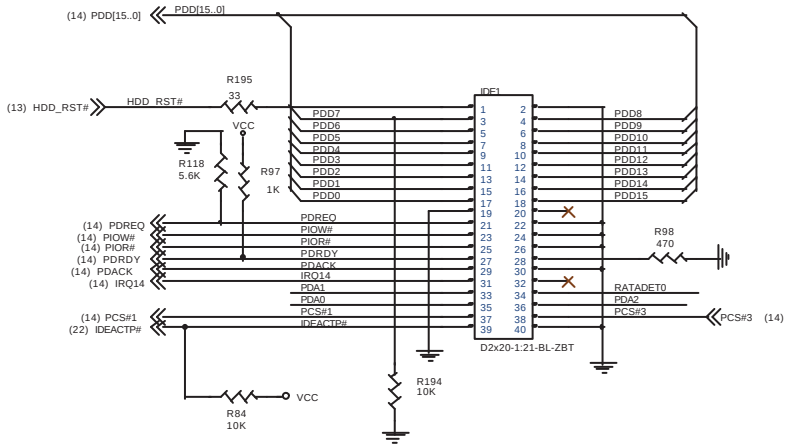

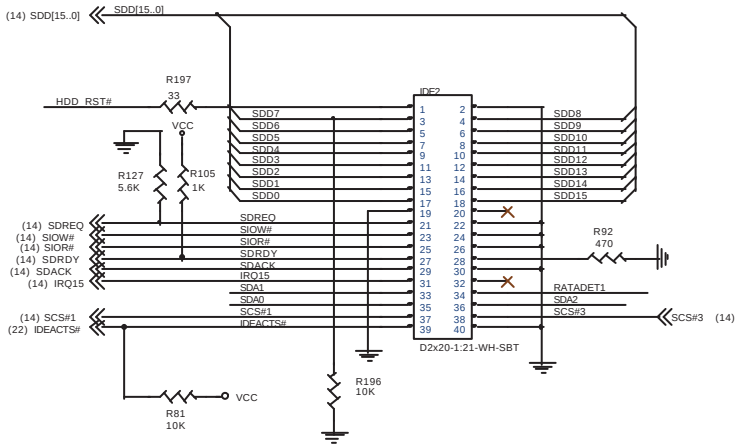

KB password wakeup
enable jumper
1-2: Enable
2-3: Disable

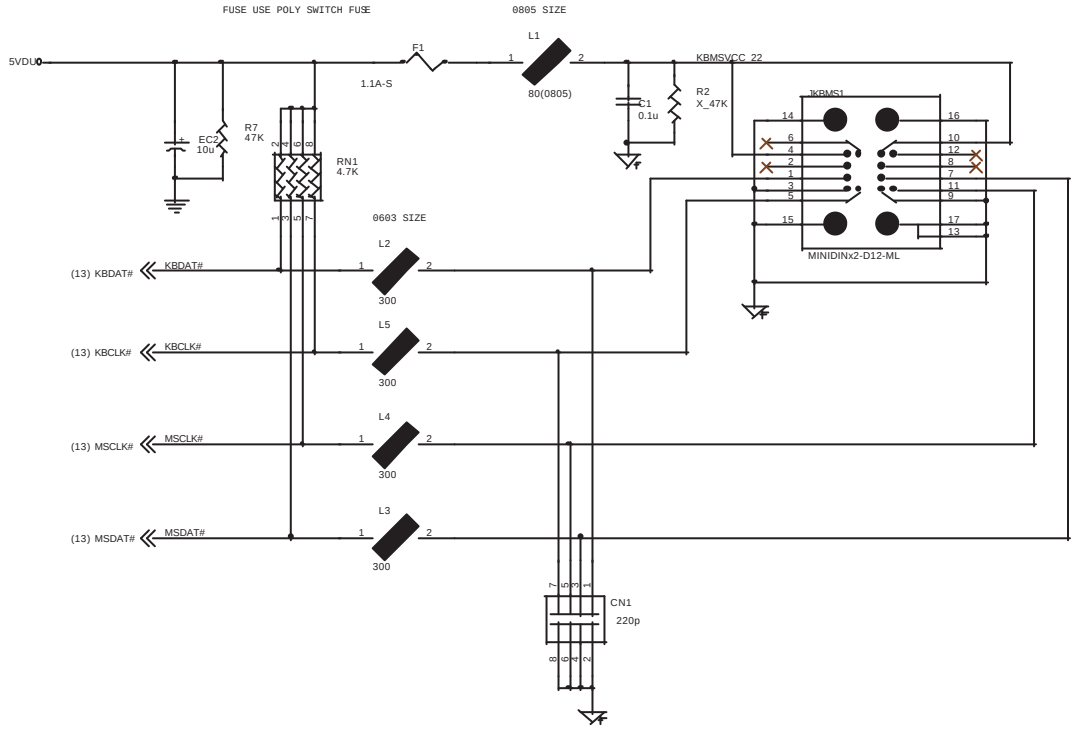

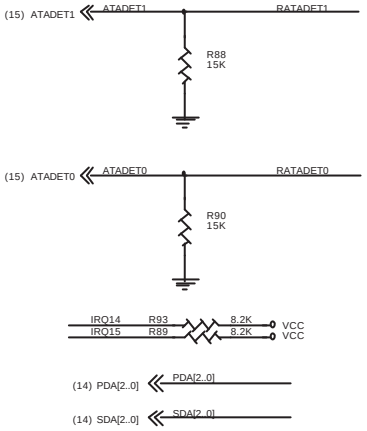

Title	{Title}	
Size	Document Number MS-6505	Rev 0A
Date: Thursday, August 02, 2001	Sheet 19 of 26	

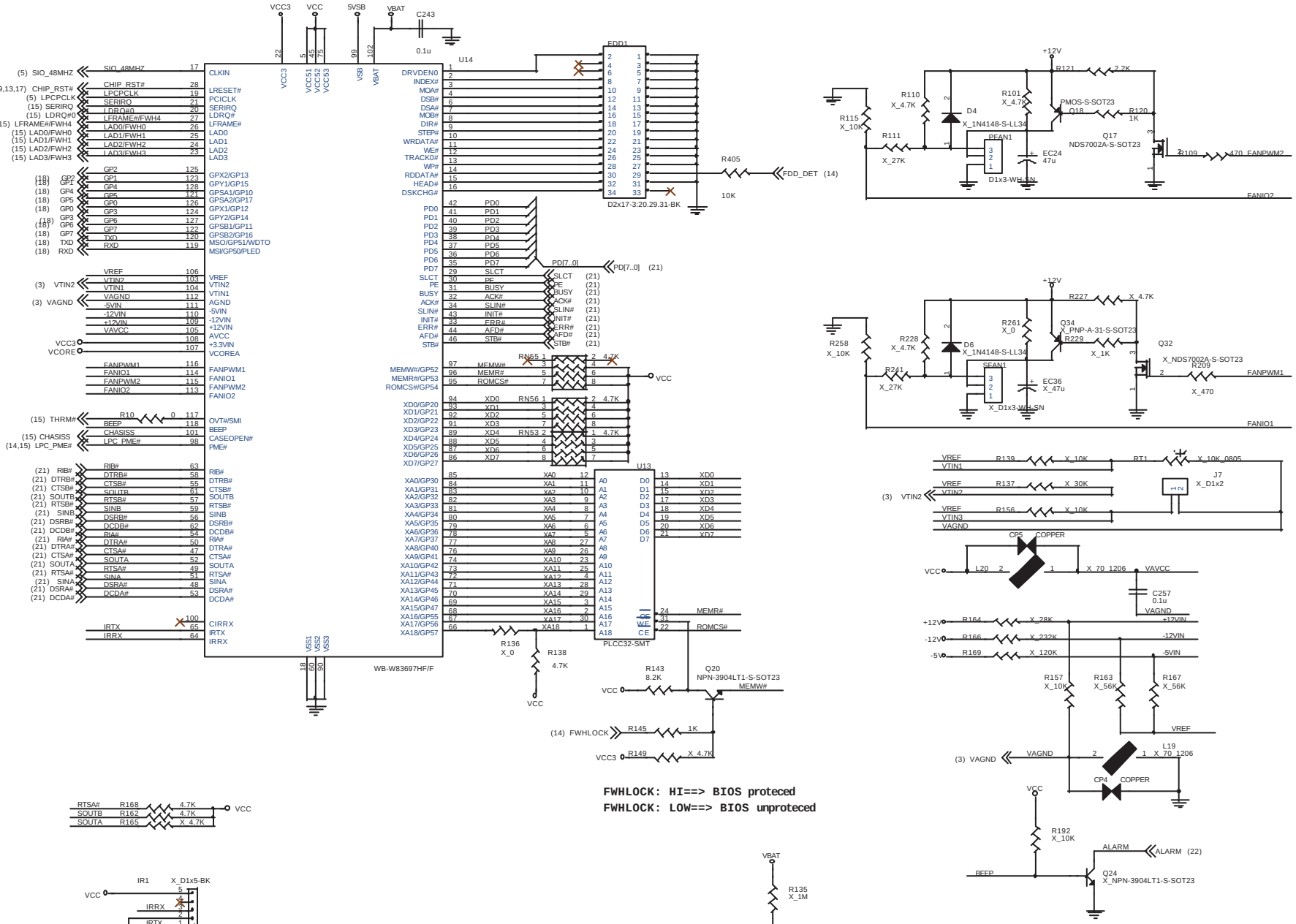
U14
WB-W83697HF/F
FDD1
D2x17-3:20.29.31-BK
U13
PLCC32-SMT
FANIO2
FANIO1
FWHLOCK: HI==> BIOS proteced
FWHLOCK: LOW==> BIOS unproteced
IR1 X_D1x5-BK
Title
{Title}
Size
Document Number
MS-6505
Rev
0A
Date: Thursday, August 02, 2001
Sheet 20 of 26

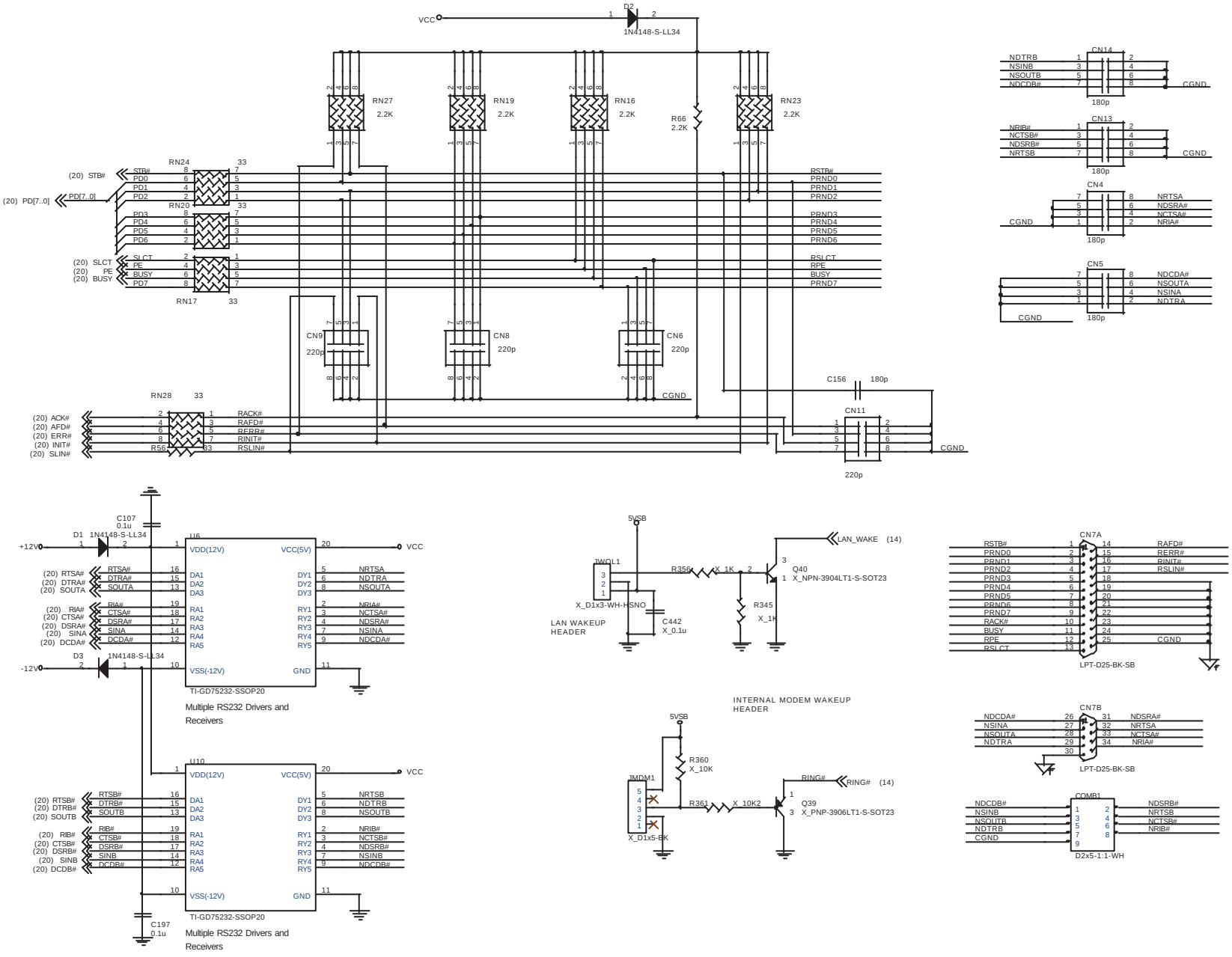

Title	{Title}	
Size	Document Number MS-6505	Rev 0A
Date: Thursday, August 02, 2001	Sheet 21 of 26	

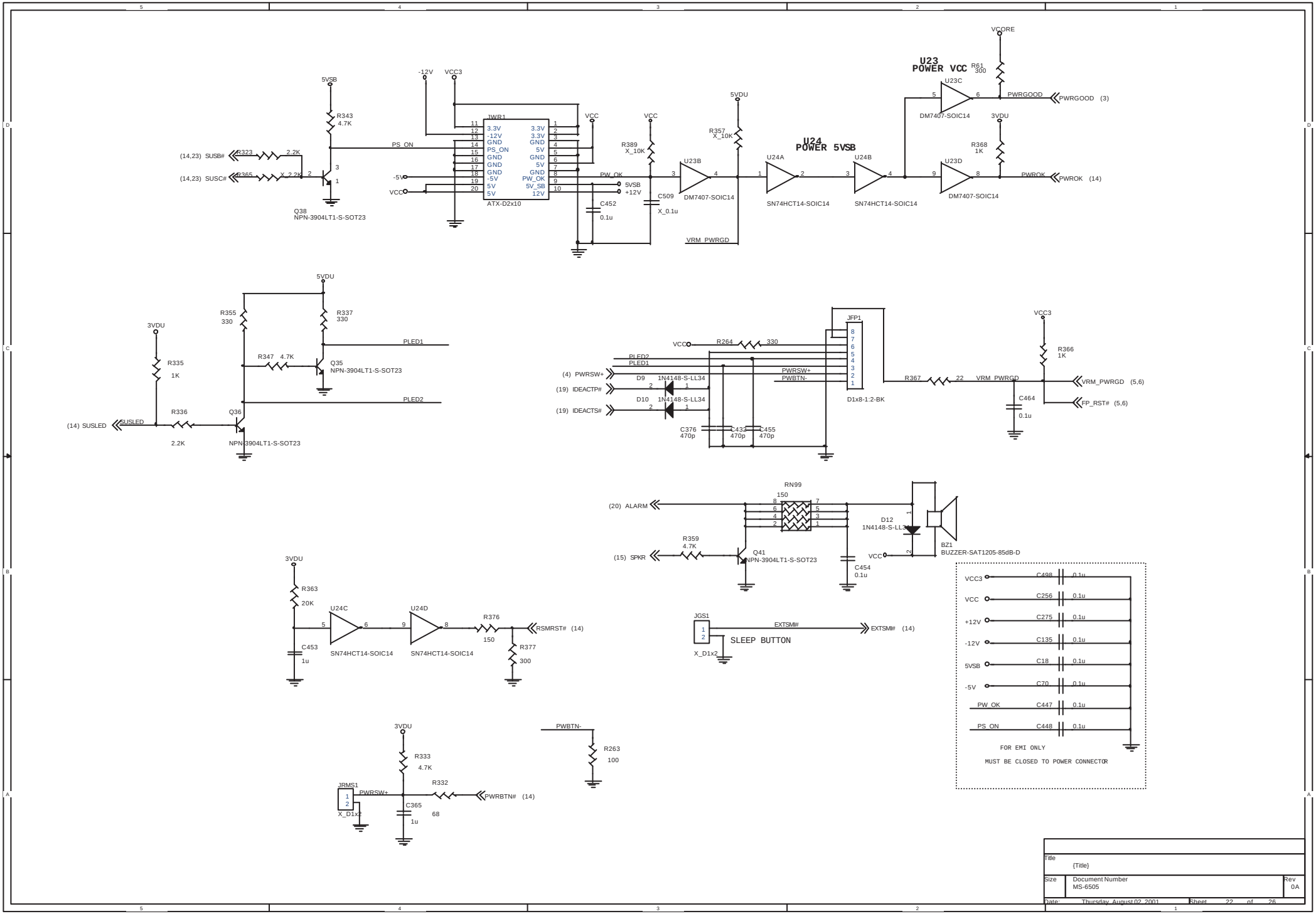
U23
POWER VCC
U24
POWER 5VSB
1WR1
ATX-D2x10
3.3V
-12V
GND
PS_ON
5V
5V_SB
12V
PW_OK
Q38
NPN-3904LT1-S-SOT23
(14,23) SUSB#
(14,23) SUSC#
R323 2.2K
R365 X_2.2K
R343 4.7K
R389 X_10K
R357 X_10K
C509 X_0.1u
C452 0.1u
DM7407-SOIC14
SN74HCT14-SOIC14
U23B
U24A
U24B
U23C
U23D
R61 300
R368 1K
PWRGOOD
PWROK
PWRGOOD (3)
PWROK (14)
VRM_PWRGD
5VSB
+12V
VCORE
VCC
VCC3
5VDU
3VDU
R355 330
R337 330
R335 1K
R347 4.7K
R336 2.2K
Q35
NPN-3904LT1-S-SOT23
Q36
NPN-3904LT1-S-SOT23
(14) SUSLED
SUSLED
PLED1
PLED2
JFP1
D1x8-1:2-BK
R264 330
R367 22
R366 1K
C464 0.1u
VRM_PWRGD (5,6)
FP_RST# (5,6)
(4) PWRSW+
(19) IDEACTP#
(19) IDEACTS#
D9 1N4148-S-LL34
D10 1N4148-S-LL34
PWRSW+
PWBTN-
C376 470p
C432 470p
C455 470p
RN99 150
(20) ALARM
(15) SPKR
R359 4.7K
Q41
NPN-3904LT1-S-SOT23
D12
1N4148-S-LL34
BZ1
BUZZER-SAT1205-85dB-D
C454 0.1u
R363 20K
C453 1u
R376 150
R377 300
RSMRST# (14)
JGS1
X_D1x2
EXTSMI#
EXTSMI# (14)
SLEEP BUTTON
C498 0.1u
C256 0.1u
C275 0.1u
C135 0.1u
C18 0.1u
C70 0.1u
C447 0.1u
C448 0.1u
FOR EMI ONLY
MUST BE CLOSED TO POWER CONNECTOR
R333 4.7K
R332 68
C365 1u
JRMS1
PWRSW+
PWRBTN# (14)
R263 100
Title
{Title}
Size
Document Number
MS-6505
Rev
0A
Date: Thursday, August 02, 2001
Sheet 22 of 26

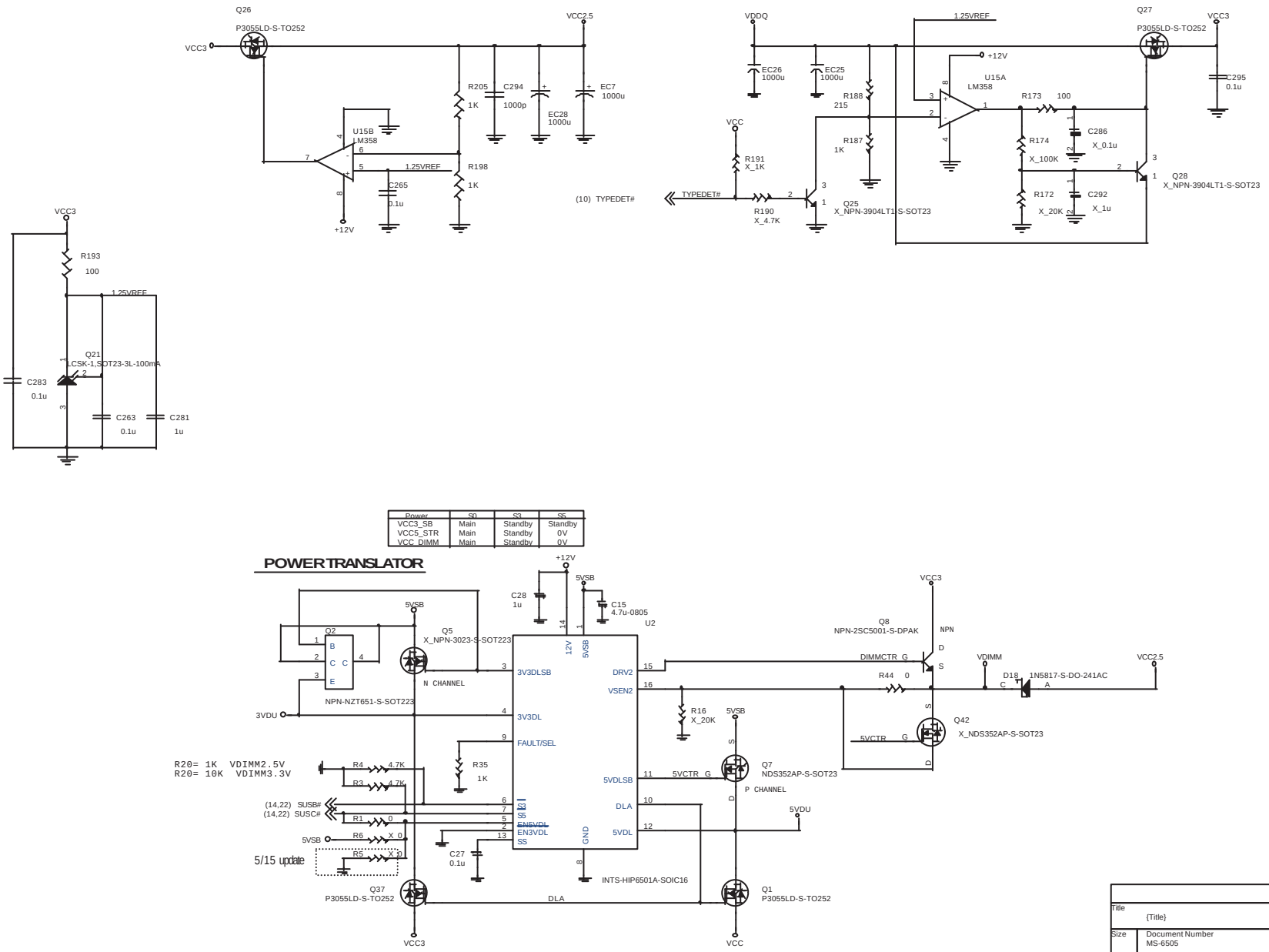

Title			
	{Title}		
Size	Document Number MS-6505		Rev 0A
Date: Thursday, August 02, 2001		Sheet 23 of 26	

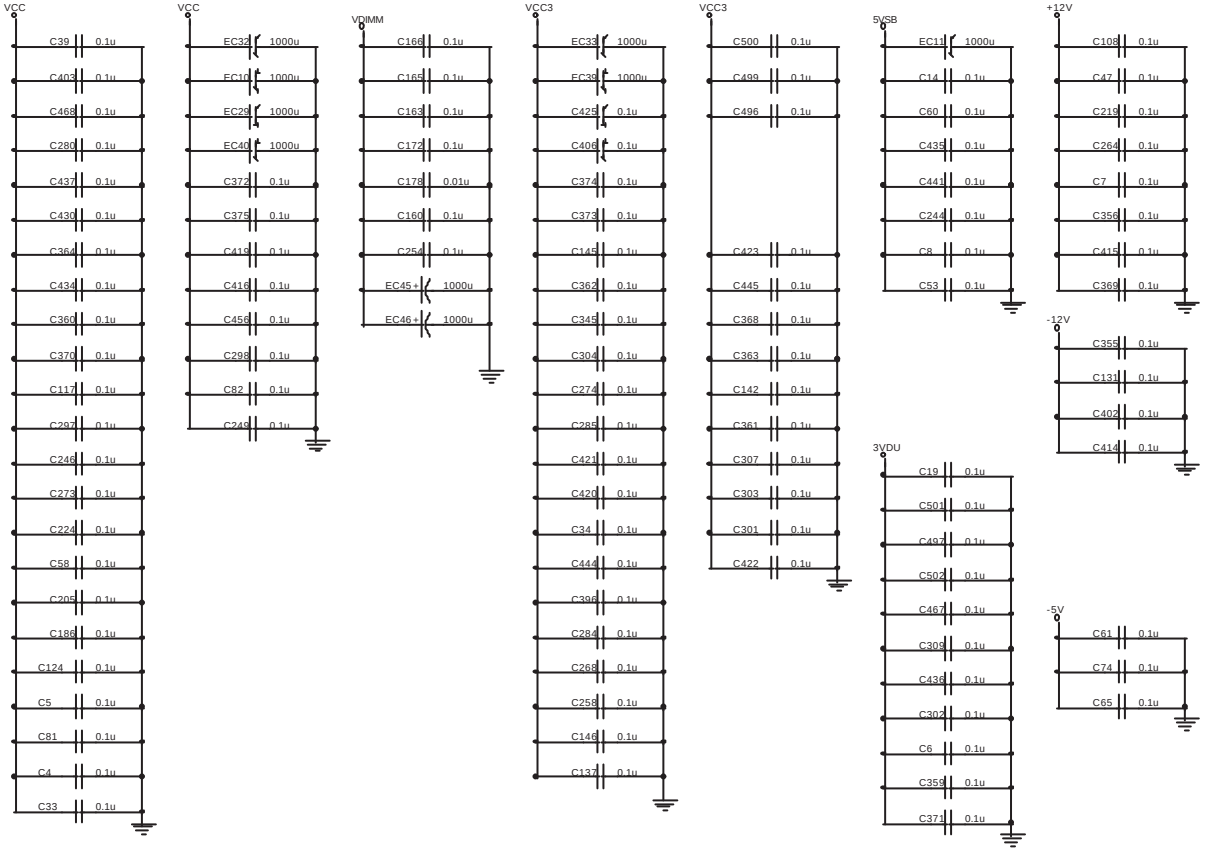

Title	{Title}	
Size	Document Number MS-6505	Rev 0A
Date: Thursday, August 02, 2001	Sheet 24 of 26	

REALTEK 8100(L) LAN

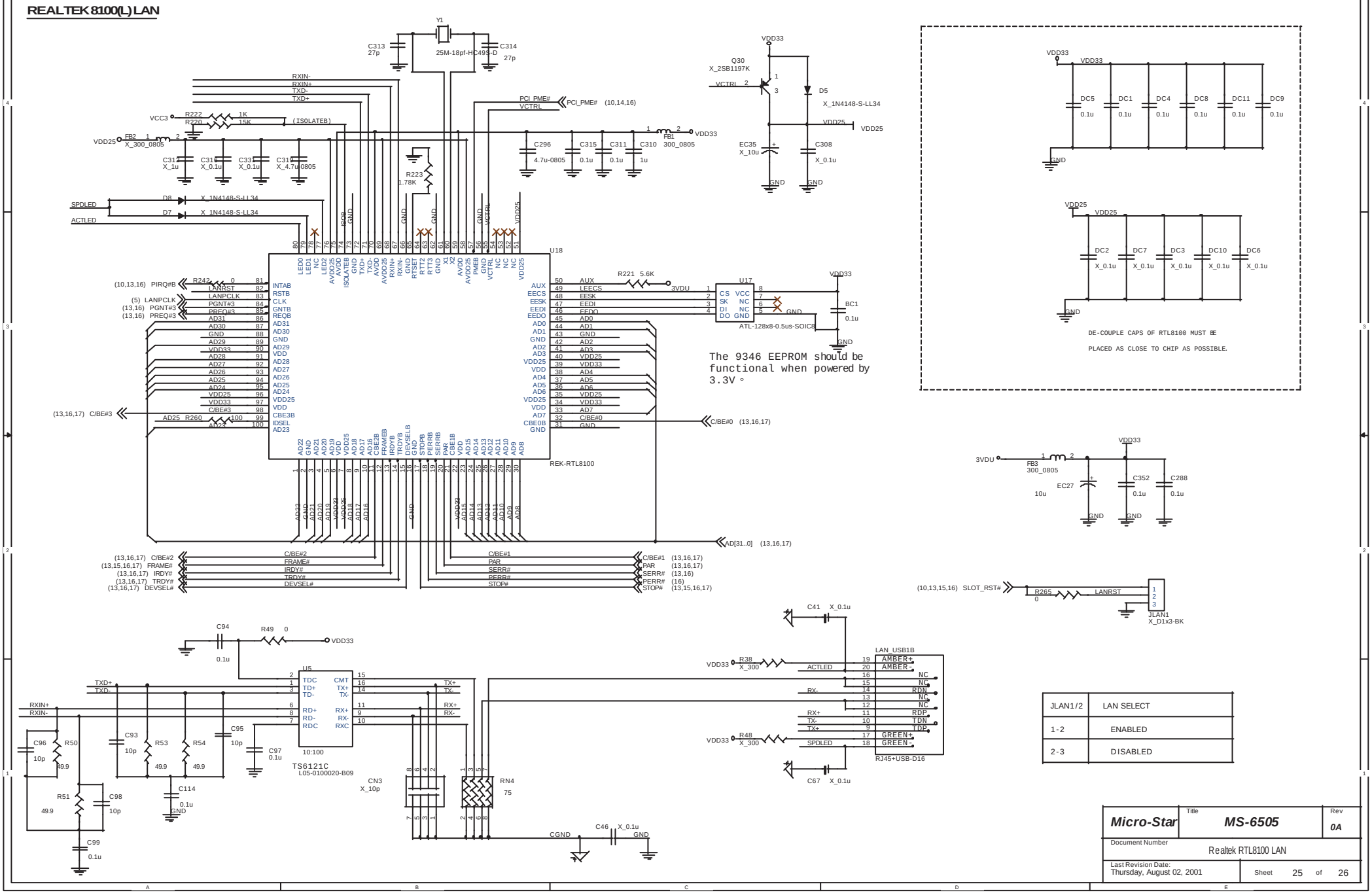

JLAN1/2	LAN SELECT
1-2	ENABLED
2-3	DISABLED

Micro-Star	Title: MS-6505	Rev: 0A
Document Number: Realtek RTL8100 LAN		
Last Revision Date: Thursday, August 02, 2001	Sheet 25 of 26	

PCB OTHER COMPONENT

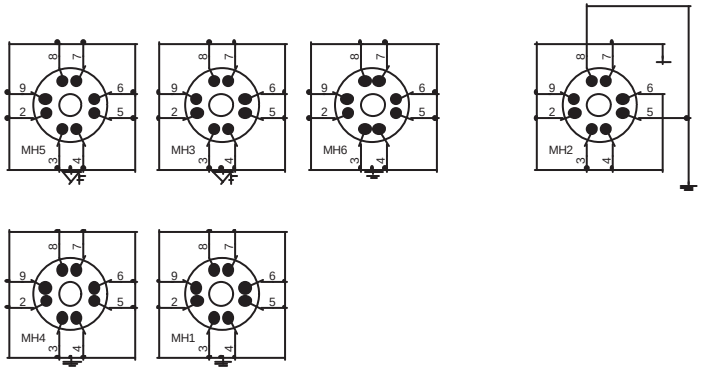

U3_X1 U4_X1

BS1_X1 BS2_X1 BS3_X1 BS4_X1

BS6_X1 BS7_X1 BS8_X1 BS9_X1

BS1_X1 BS2_X1 BS3_X1 BS6_X1

BS4_X1 BS7_X1 BS8_X1 BS9_X1

FM1 FM2 FM3 FM4

X_FM X_FM X_FM X_FM

FM5 FM6 FM7 FM8

X_FM X_FM X_FM X_FM

SIMULATION TRACE

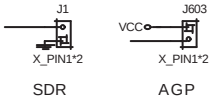

Micro-Star	Title: MS-6505	Rev: 0B
Document Number: PCB OTHER COMPONEMT		
Last Revision Date: Thursday, August 02, 2001	Sheet 26 of 27	

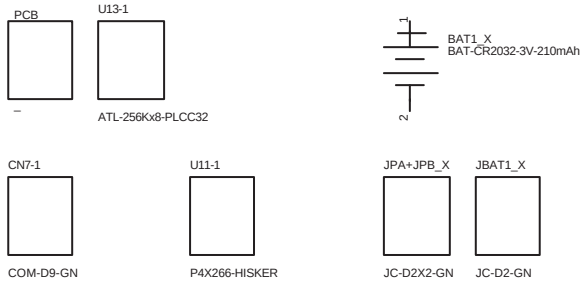

Micro-Star	Title: MS-6505	Rev: 0B
Document Number: MANUAL		
Last Revision Date: Thursday, August 02, 2001	Sheet 27 of 27	