Cover Sheet	1
Block Diagram	2
Clock ICS950218AF & ATA100 IDE CONNECTORS	3
mPGA478-B INTEL CPU Sockets	4 - 5
INTEL Brookdale-G GMCH -- North Bridge	6 - 8
INTEL ICH4 -- South Bridge	9-10
LPC I/O -- W83627HF	11
AC'97 Codec / Audio Jack / Front Audio Connector	12
Audio Amplifier & CD Panel Play & W518D_SB	13
DDR DIMM1&2 and DDR Terminator Resistor	14-15
AGP Slot	16
PCI SLOT 1 & 2 & 3 & 4 & 5	17,27
Floppy, KB/MS, Com/Printer Ports	18
USB Connectors	19
Front Panel , ATX Connectors	20
FWH & CNR Riser	21
VRM 9.0 Regulator (CPU Power)	22
SMBUS Isolation & FAN & AGP 1.5V	23
LAN -- INTEL 82562EM/ET	24
W83302D(MS5) ACPI Controller	25
VGA Connector	26
PCI_ISA Bridge	28-29
Manual Part	30

0. Gerber-Out MS6398E-300_04-03-91.dsn (To layout) 04/03/2002
1. Release BOM MS6398E-300_04-09-91.dsn (Release BOM 1'st time) 04/09/2002
2. ECR BOM MS6398E-300_04-24-91.dsn (Release BOM 2'nd time) 04/24/2002
3. ECR BOM MS6398E-300_04-29-91.dsn (Release BOM 3'rd time) 04/29/2002
4. ECR BOM MS6398E-300_05-23-91.dsn (Release ES-BOM 6398E-05S to MP-BOM 6398E-040) 05/23/2002
5. ECR BOM MS6398E-300_07-02-91.dsn (Release ECR for 6398E-040) 07/02/2002

MS-6398E / VER:3.0

INTEL (R) Brookdale-G Chipset
Willamette/Northwood 478pin mPGA-B Processor Schematics

CPU: Willamette/Northwood mPGA-478B Processor

System Brookdale-E Chipset:
INTEL MCH 845E + INTEL ICH4

On Board Chipset:

BIOS -- FWH
AC'97 Codec -- ALC201A/650
LPC Super I/O -- W83627HF
LAN -- INTEL 82562EM/ET

Expansion Slots:
AGP2.0 SLOT * 1
PCI2.2 SLOT * 5
ISA SLOT * 1
CNR SLOT * 1

BOM Option :
MS6398E-V3_OPT : I+L -> Legend BOM => Note : I + L -> 6398E-05S (ES) -> 6398E-040 (MP BOM)

Note : Default : P4+DDR*2+PCI*5+CNR*1+S/W Audio ADI1981
I => Support ISA
L => Support Intel LAN 82562ET

Micro Star Restricted Secret

Title	COVER SHEET	Rev
Document Number	MS-6398E	300
MICRO-STAR INT'L CO.,LTD. No. 69, Li-De St, Jung-He City, Taipei Hsien, Taiwan http://www.msi.com.tw	Last Revision Date:	
	Sheet 1 of 30	

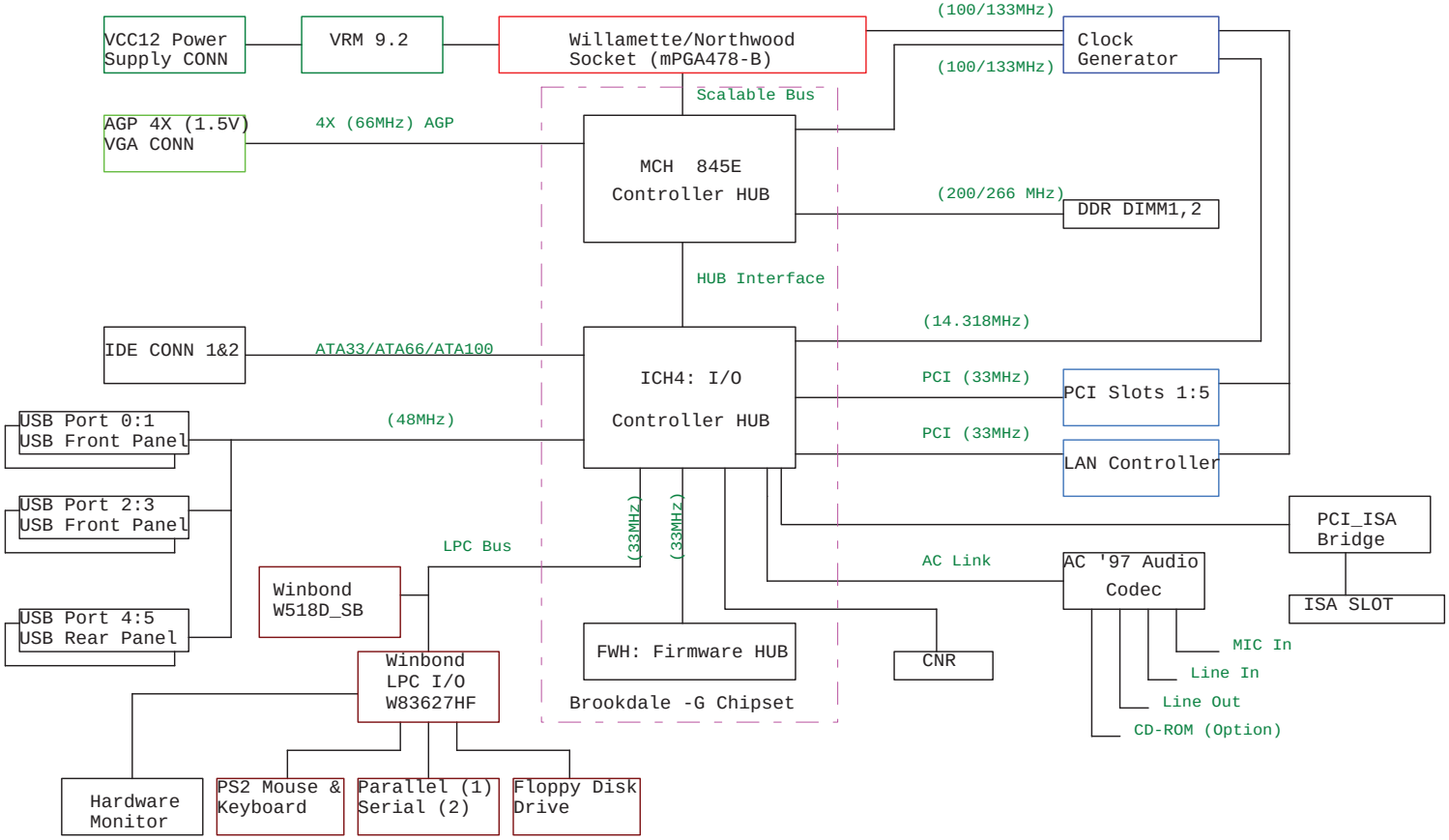

Model option table

Model type	Function	BOM Config	ERP BOM No.
MS6398E/V3.0	For Legend	L + I	6398E-05S

Micro Star Restricted Secret

Title	BLOCK DIAGRAM	Rev 300
Document Number	MS-6398E	
MICRO-STAR INT'L CO.,LTD. No. 69, Li-De St, Jung-He City, Taipei Hsien, Taiwan http://www.msi.com.tw	Last Revision Date: Wednesday, July 03, 2002	
	Sheet 2 of 30	

CLOCK GENERATOR BLOCK

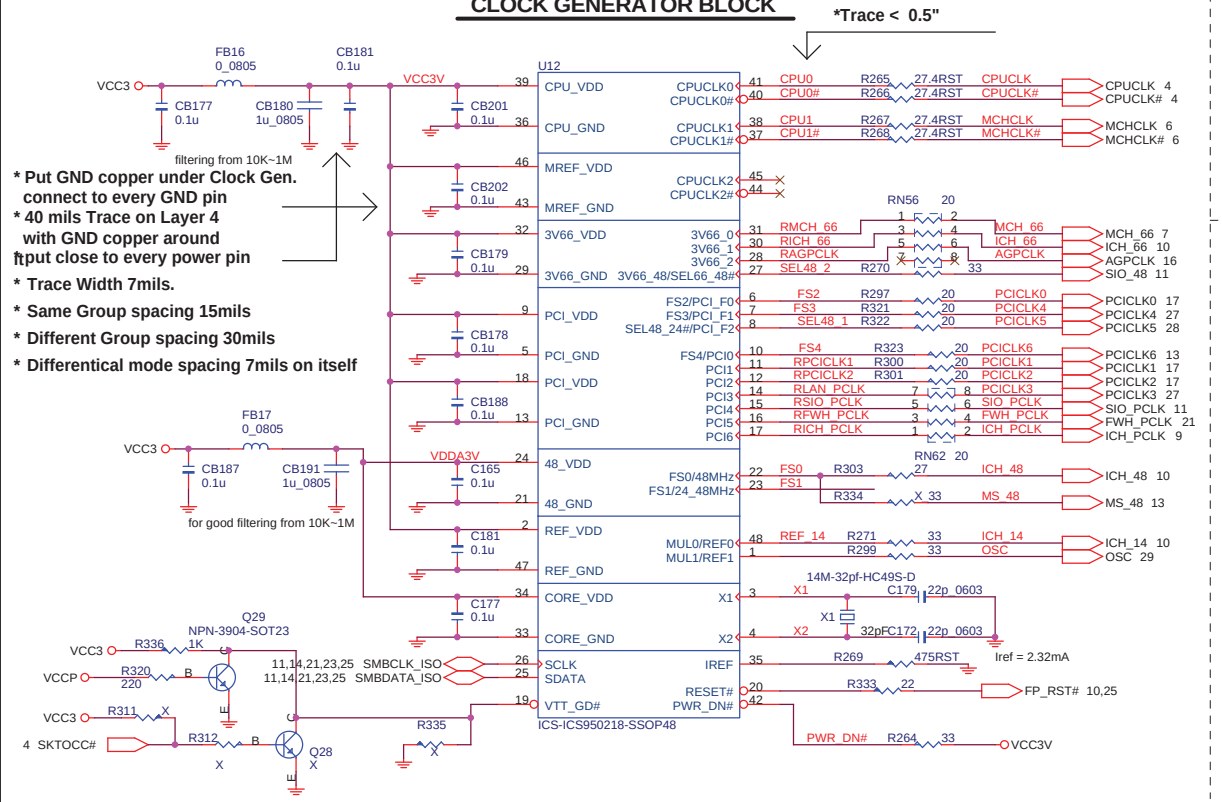

Shut Source Termination Resistors

Trace less 0.2"

49.9ohm for 50ohm M/B impedance

CLOCK STRAPPING RESISTORS

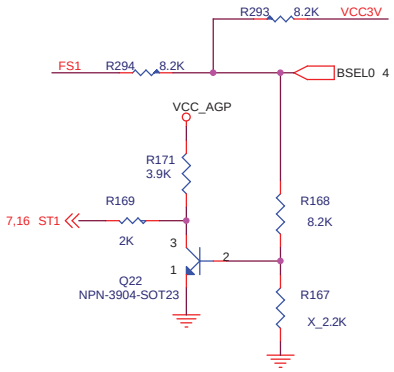

FS4	FS3	FS2	FS1	FS0	CPU (MHz)
1	1	1	0	1	100 MHz
1	1	1	1	1	133 MHz

Pull-Down Capacitors

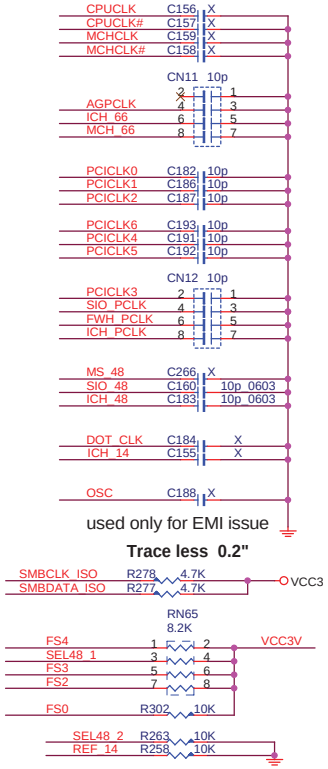

MULTSEL0=0 -> 6X Iref
MULTSEL0=1 -> 7X Iref

ATA100 IDE CONNECTORS

PRIMARY IDE BLOCK

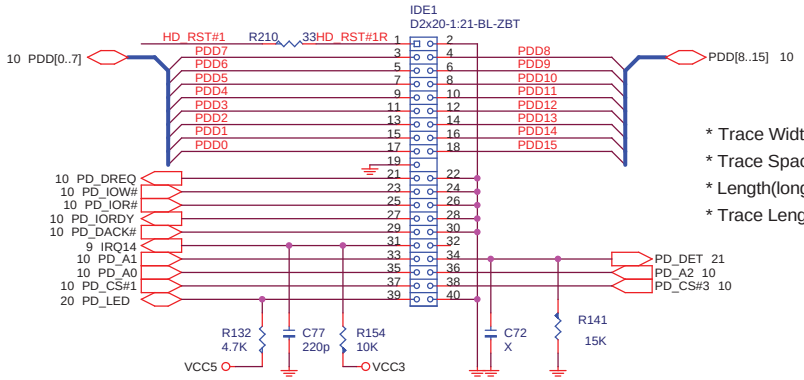

* Trace Width : 5mils
* Trace Spacing : 7mils
* Length(longest)-Length(shortest)<0.5"
* Trace Length less than 6"

SECONDARY IDE BLOCK

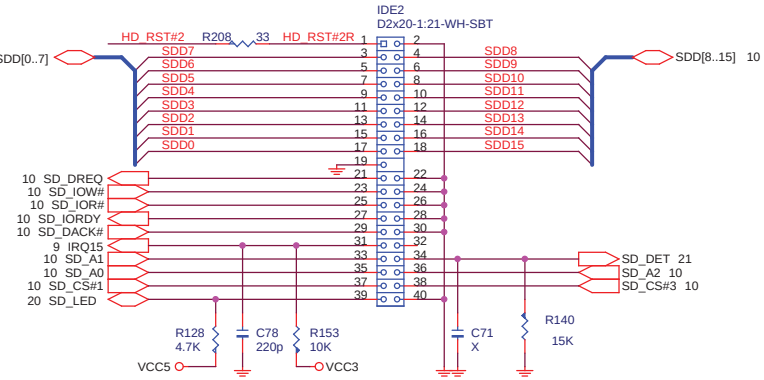

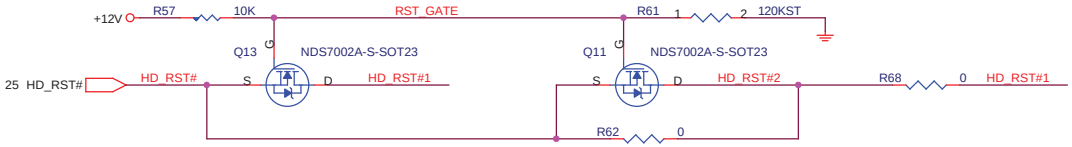

Micro Star Restricted Secret

Title	Clock & IDE Conn.	Rev 300
Document Number	MS-6398E	
MICRO-STAR INT'L CO.,LTD. No. 69, Li-De St, Jung-He City, Taipei Hsien, Taiwan http://www.msi.com.tw	Last Revision Date: Wednesday, July 03, 2002	
	Sheet 3 of 30	

CPU SIGNAL BLOCK

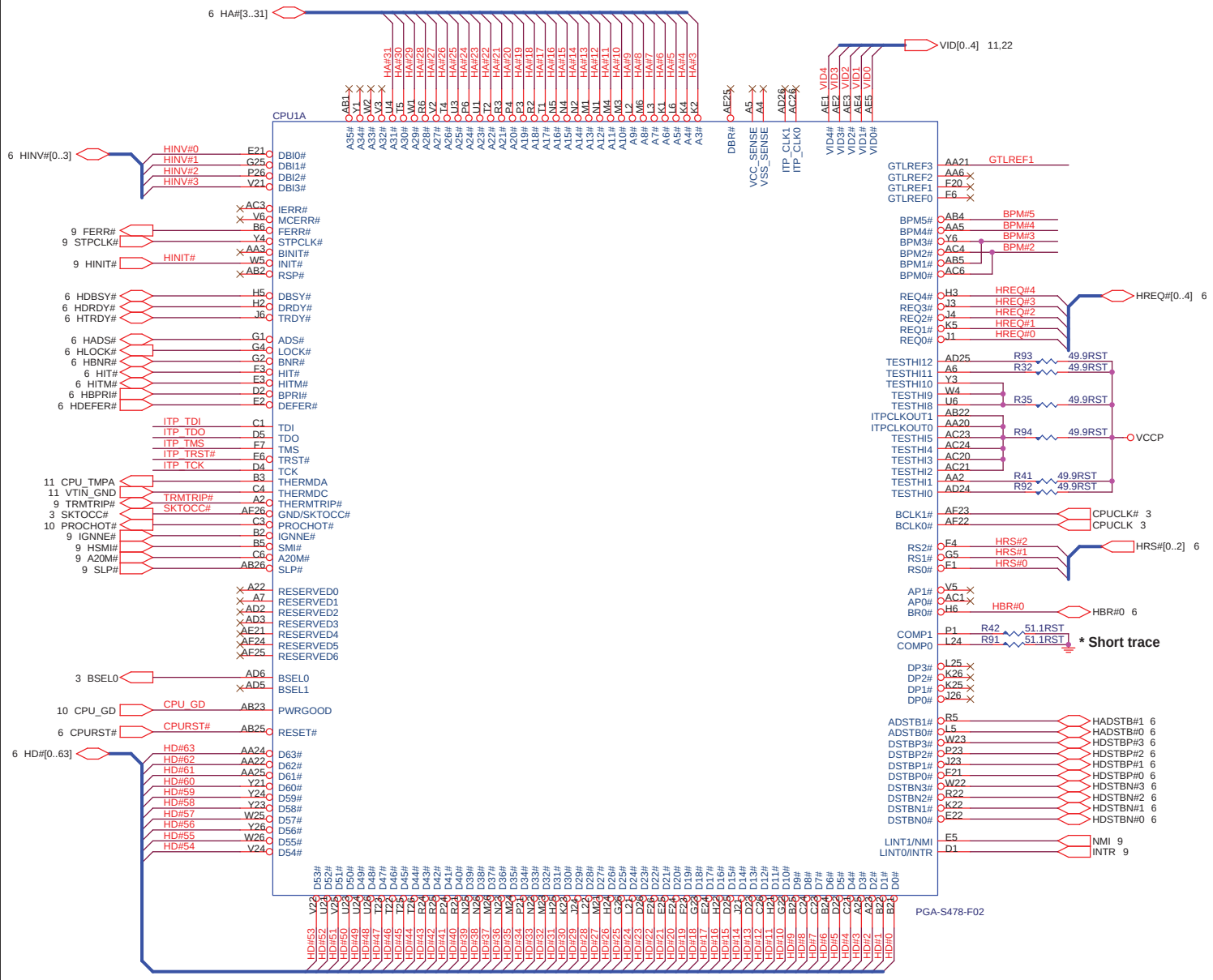

CPU GTL REFERNCE VOLTAGE BLOCK

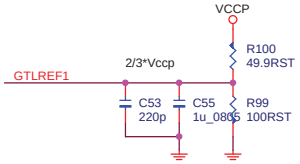

Every pin put one 220pF cap near it.

Trace Width 7mils, Space 10mils.

Keep the voltage divider within 1.5" of the GETREF pin.

CPU_ITP_BLOCK

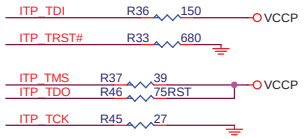

CPU STRAPPING RESISTORS

ALL COMPONENTS CLOSE TO CPU

ALL COMPONENTS CLOSE TO CPU

Micro Star Restricted Secret

Title	mPGA478-B Intel CPU Socket Part 1	Rev 300
Document Number	MS-6398E	
MICRO-STAR INT'L CO.,LTD. No. 69, Li-De St, Jung-He City, Taipei Hsien, Taiwan http://www.msi.com.tw	Last Revision Date: Wednesday, July 03, 2002	
	Sheet 4 of 30	

CPU VOLTAGE BLOCK

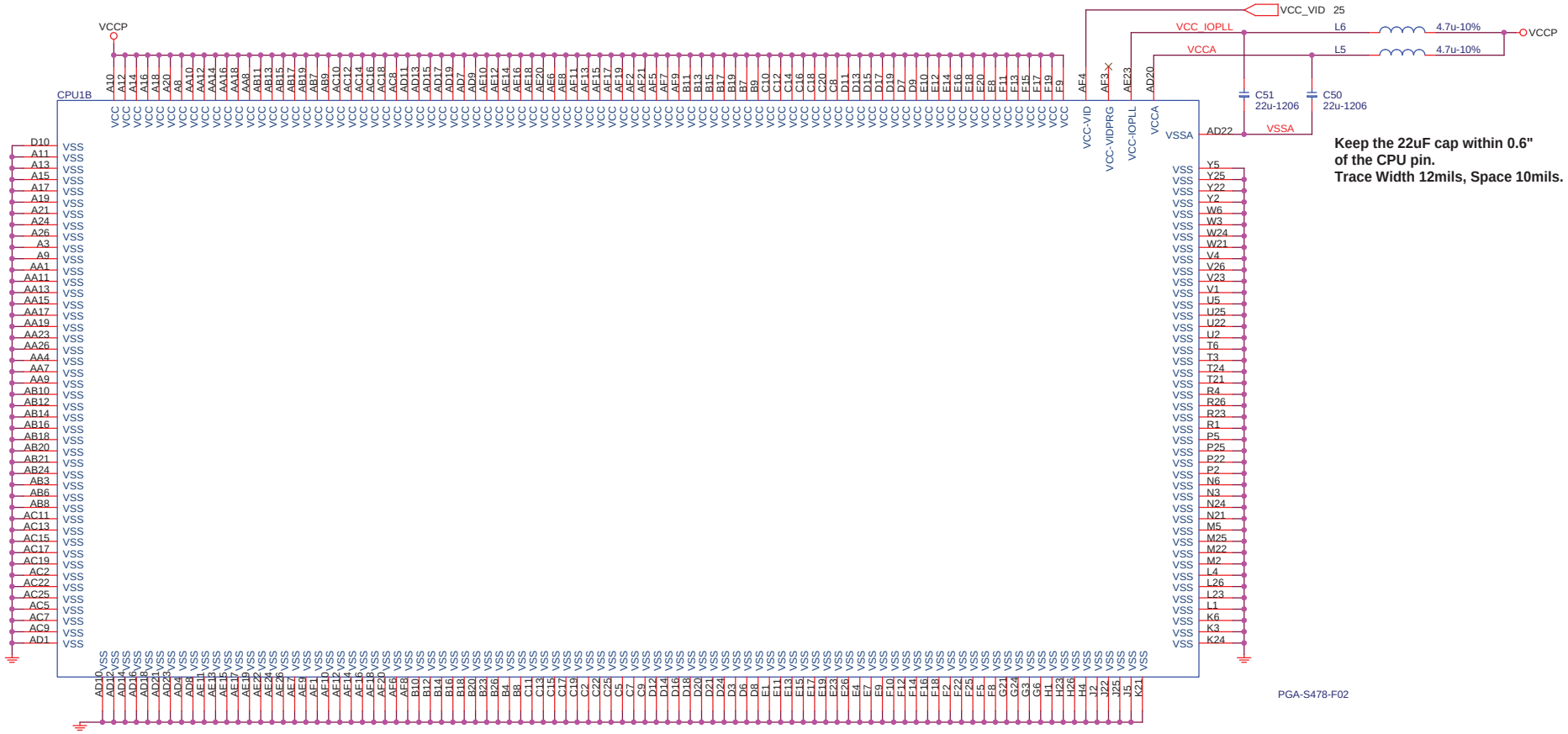

Keep the 22uF cap within 0.6" of the CPU pin.
Trace Width 12mils, Space 10mils.

CPU DECOUPLING CAPACITORS

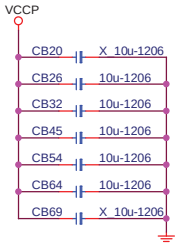

Place 14 pcs 1206 size cap north side of processor

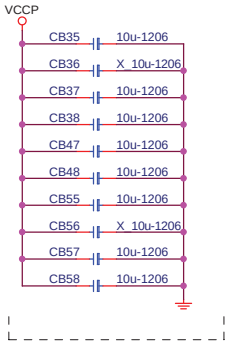

PLACE CAPS WITHIN CPU CAVITY

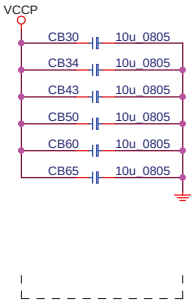

Place these caps on south side of processor

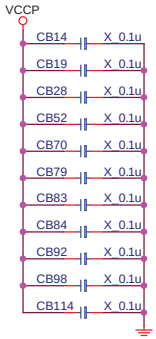

Micro Star Restricted Secret

Title	mPGA478-B Intel CPU Socket Part 2	Rev 300
Document Number	MS-6398E	
MICRO-STAR INT'L CO.,LTD. No. 69, Li-De St, Jung-He City, Taipei Hsien, Taiwan http://www.msi.com.tw	Last Revision Date: Wednesday, July 03, 2002	
	Sheet 5 of 30	

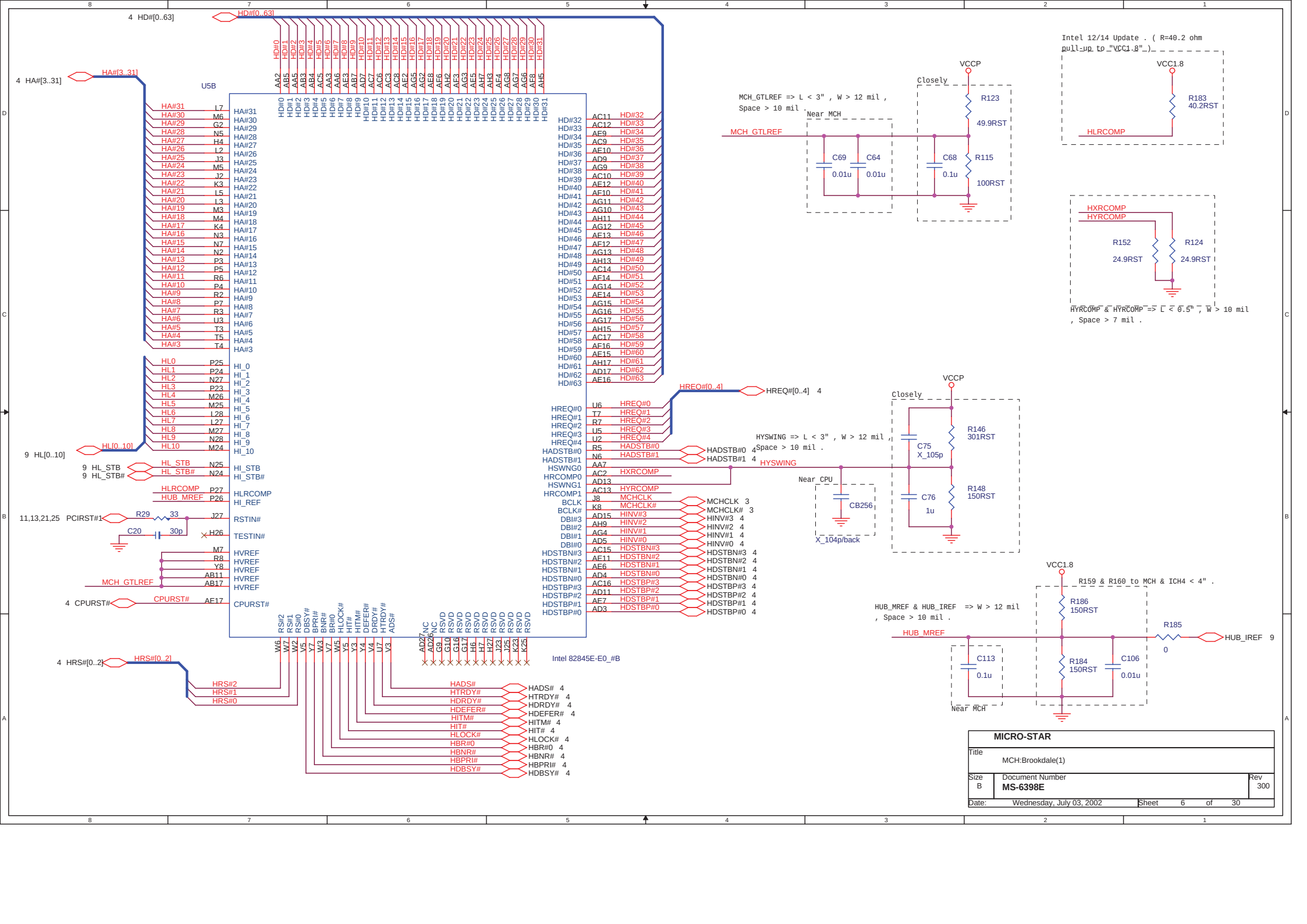
U5B
Intel 82845E-E0_#B
MCH_GTLREF => L < 3" , W > 12 mil , Space > 10 mil .
Intel 12/14 Update . (R=40.2 ohm pull-up to "VCC1.8")
HYRCOMP & HYRCOMP => L < 0.5" , W > 10 mil , Space > 7 mil .
HYSWING => L < 3" , W > 12 mil , Space > 10 mil .
HUB_MREF & HUB_IREF => W > 12 mil , Space > 10 mil .
R159 & R160 to MCH & ICH4 < 4" .
MICRO-STAR
Title
MCH:Brookdale(1)
Size
B
Document Number
MS-6398E
Rev
300
Date: Wednesday, July 03, 2002
Sheet 6 of 30

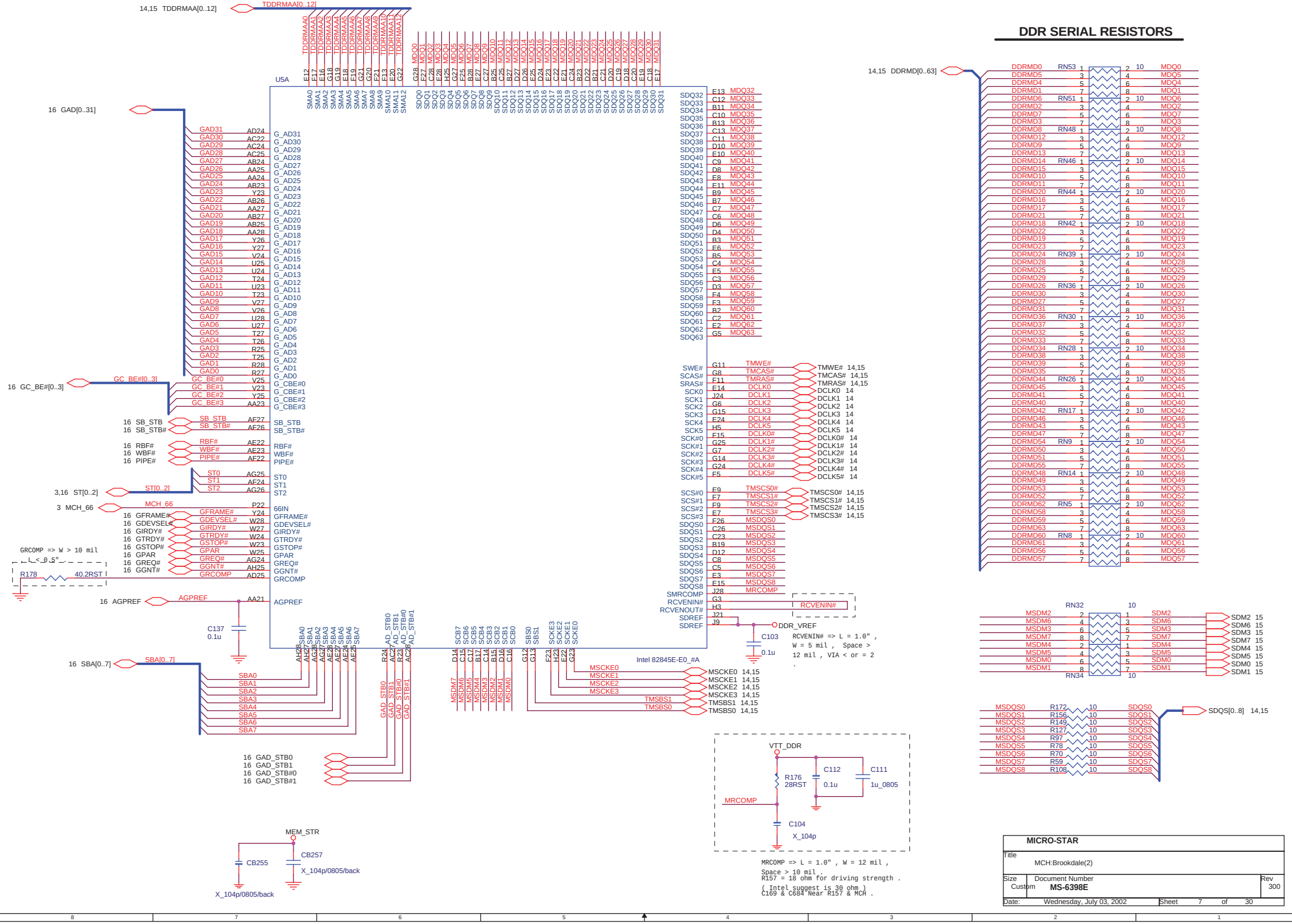
DDR SERIAL RESISTORS
U5A
Intel 82845E-E0_#A
14,15 TDDRMAA[0..12]
16 GAD[0..31]
16 GC_BE#[0..3]
16 SB_STB
16 SB_STB#
16 RBF#
16 WBF#
16 PIPE#
3,16 ST[0..2]
3 MCH_66
16 GFRAME#
16 GDEVSEL#
16 GIRDY#
16 GTRDY#
16 GSTOP#
16 GPAR
16 GREQ#
16 GGNT#
GRCOMP => W > 10 mil
L < 0.5"
R178 40.2RST
16 AGPREF
C137 0.1u
16 SBA[0..7]
16 GAD_STB0
16 GAD_STB1
16 GAD_STB#0
16 GAD_STB#1
MEM_STR
CB255
CB257
X_104p/0805/back
14,15 DDRMD[0..63]
RN53
RN48
RN44
RN42
RN39
RN36
RN30
RN28
RN26
RN17
RN14
RN9
RN5
RN8
TMWE# 14,15
TMCAS# 14,15
TMRAS# 14,15
DCLK0 14
DCLK1 14
DCLK2 14
DCLK3 14
DCLK4 14
DCLK5 14
DCLK0# 14
DCLK1# 14
DCLK2# 14
DCLK3# 14
DCLK4# 14
DCLK5# 14
TMSCS0# 14,15
TMSCS1# 14,15
TMSCS2# 14,15
TMSCS3# 14,15
RCVENIN#
DDR_VREF
C103 0.1u
RCVENIN# => L = 1.0" , W = 5 mil , Space > 12 mil , VIA < or = 2 .
MSCKE0 14,15
MSCKE1 14,15
MSCKE2 14,15
MSCKE3 14,15
TMSBS1 14,15
TMSBS0 14,15
RN32
RN34
SDM2 15
SDM6 15
SDM3 15
SDM7 15
SDM4 15
SDM5 15
SDM0 15
SDM1 15
SDQS[0..8] 14,15
VTT_DDR
R176 28RST
C112 0.1u
C111 1u_0805
MRCOMP
C104 X_104p
MRCOMP => L = 1.0" , W = 12 mil , Space > 10 mil .
R157 = 18 ohm for driving strength .
(Intel suggest is 30 ohm)
C169 & C684 Near R157 & MCH .
MICRO-STAR
Title
MCH:Brookdale(2)
Size Custom
Document Number
MS-6398E
Rev 300
Date: Wednesday, July 03, 2002
Sheet 7 of 30

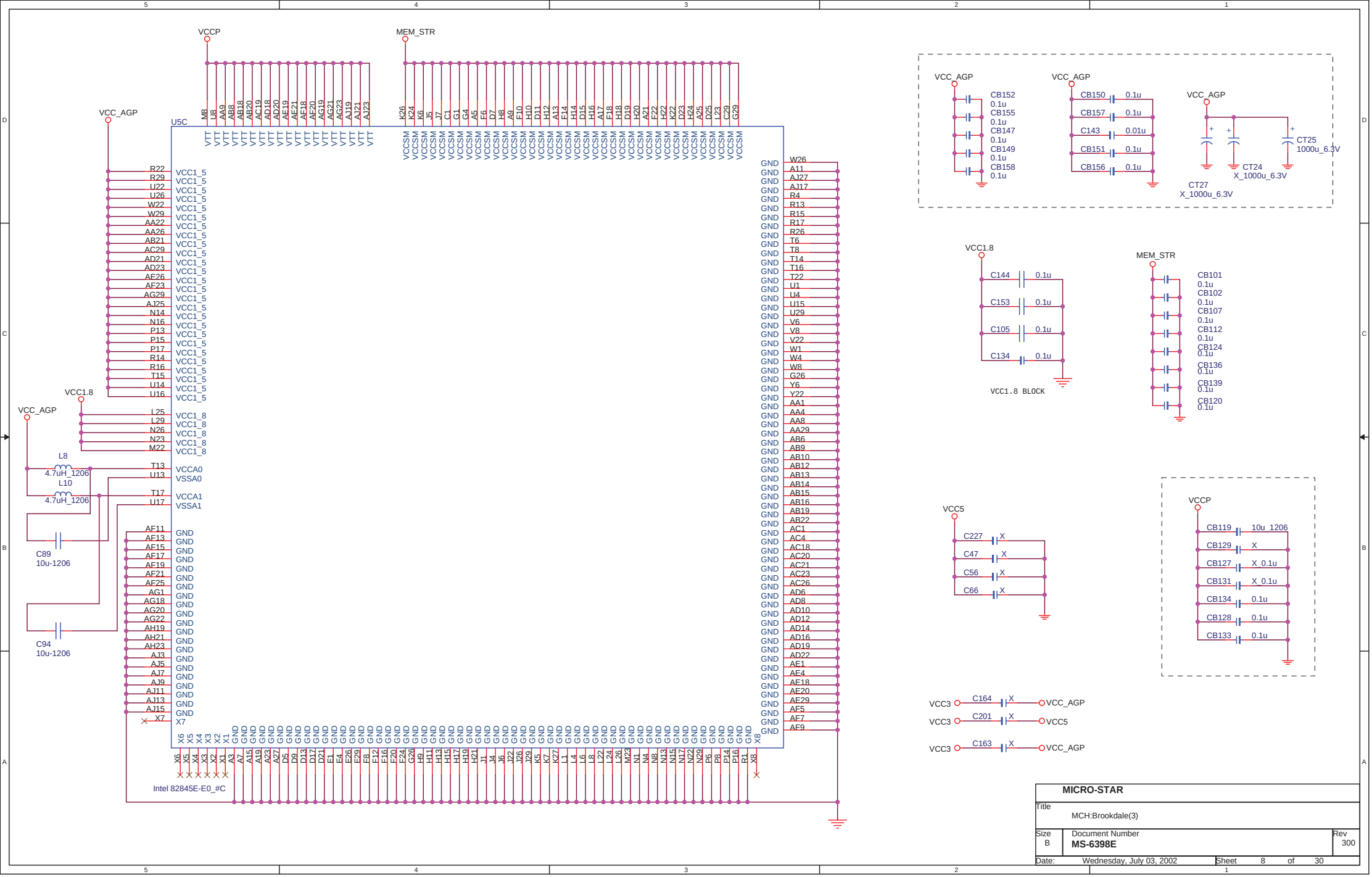

MICRO-STAR		
Title: MCH:Brookdale(3)		
Size: B	Document Number: MS-6398E	Rev: 300
Date: Wednesday, July 03, 2002	Sheet 8 of 30	

ICH4 PCI / HUB LINK / CPU / LAN / INTERRUPT SIGNALS

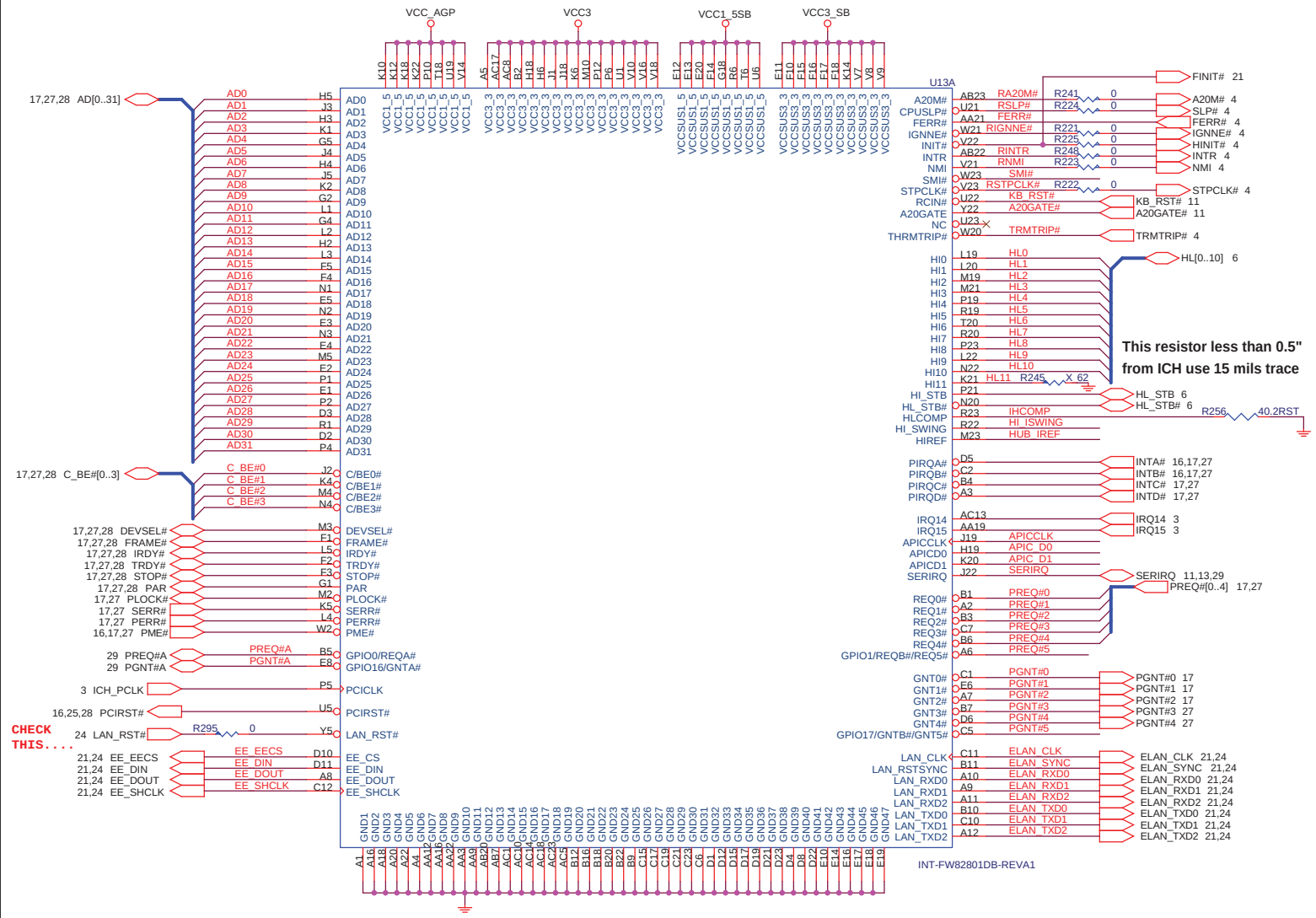

ICH4 SMI# SIGNAL

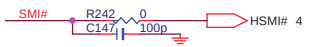

ICH4 STRAPPING RESISTORS

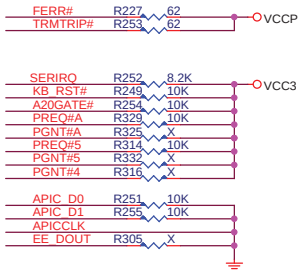

ICH4 REFERENCE VOLTAGE

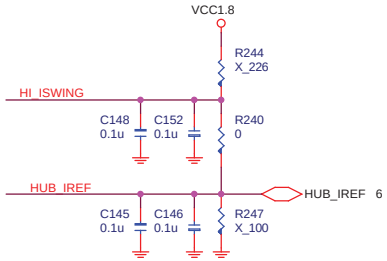

Place Cap. as Close as possible to ICH4 < 0.25"
Trace width use 12 mils and 10mils space

ICH4 DECOUPLING CAPACITORS

Place one 0.1u close to ICH4 <100 mil

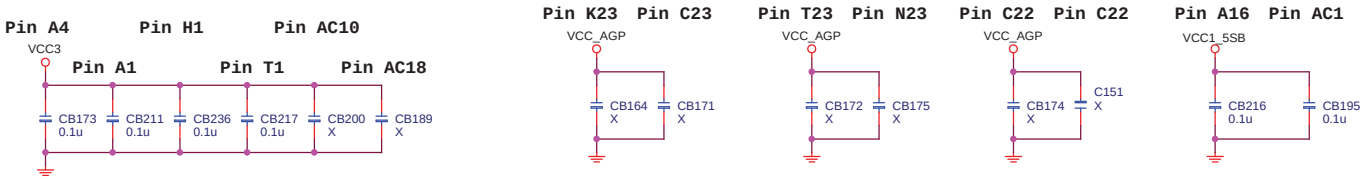

FOR Core Logic FOR Hub Interface FOR PLL

Micro Star Restricted Secret

Title	ICH4 Part 1 (Power,HUB,PCI & CPU I/F)	Rev 300
Document Number	MS-6398E	
MICRO-STAR INT'L CO.,LTD. No. 69, Li-De St, Jung-He City, Taipei Hsien, Taiwan http://www.msi.com.tw	Last Revision Date: Wednesday, July 03, 2002	
	Sheet 9 of 30	

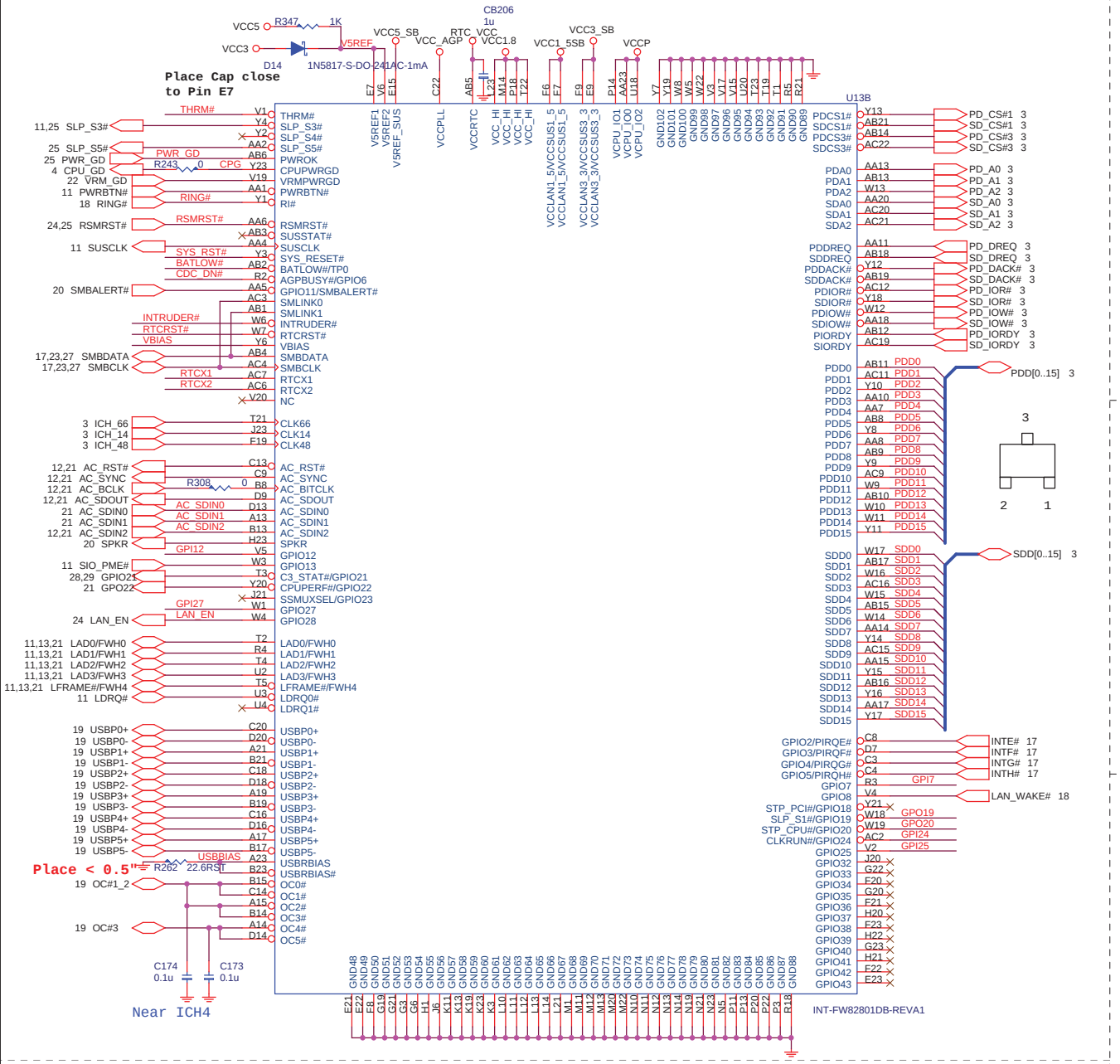

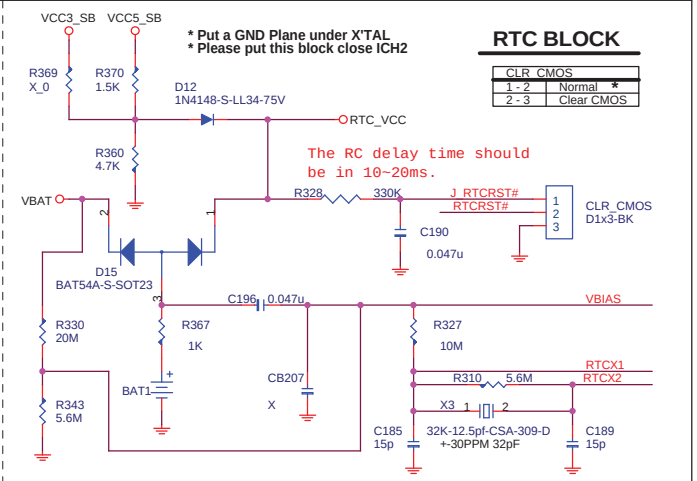

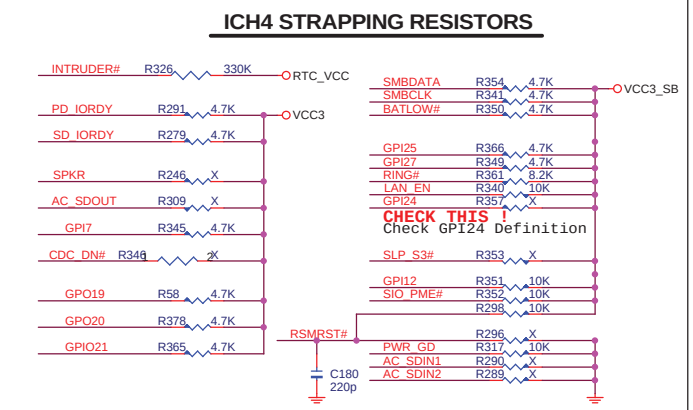

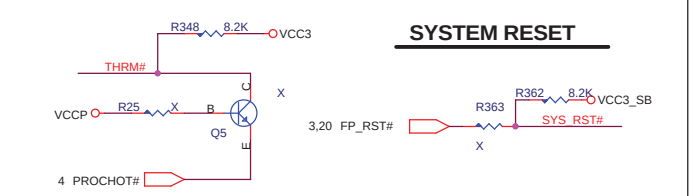

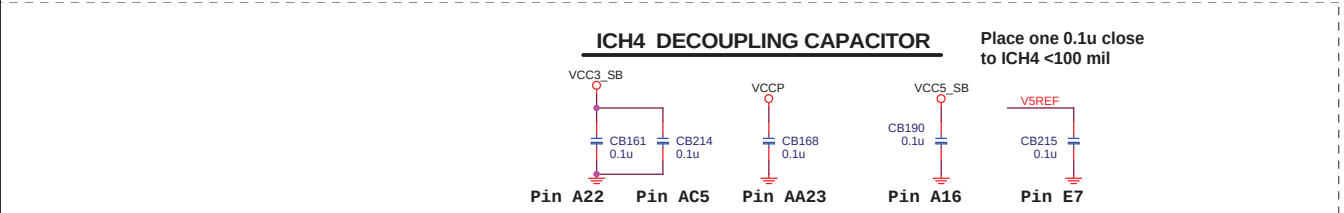

Micro Star Restricted Secret

Title	ICH4 Part 2 (RTC,GPIO,LPC,USB,IDE)	Rev 300
Document Number	MS-6398E	
MICRO-STAR INT'L CO.,LTD. No. 69, Li-De St, Jung-He City, Taipei Hsien, Taiwan http://www.msi.com.tw	Last Revision Date: Wednesday, July 03, 2002	
	Sheet 10 of 30	

LPC SUPER I/O W83627HF

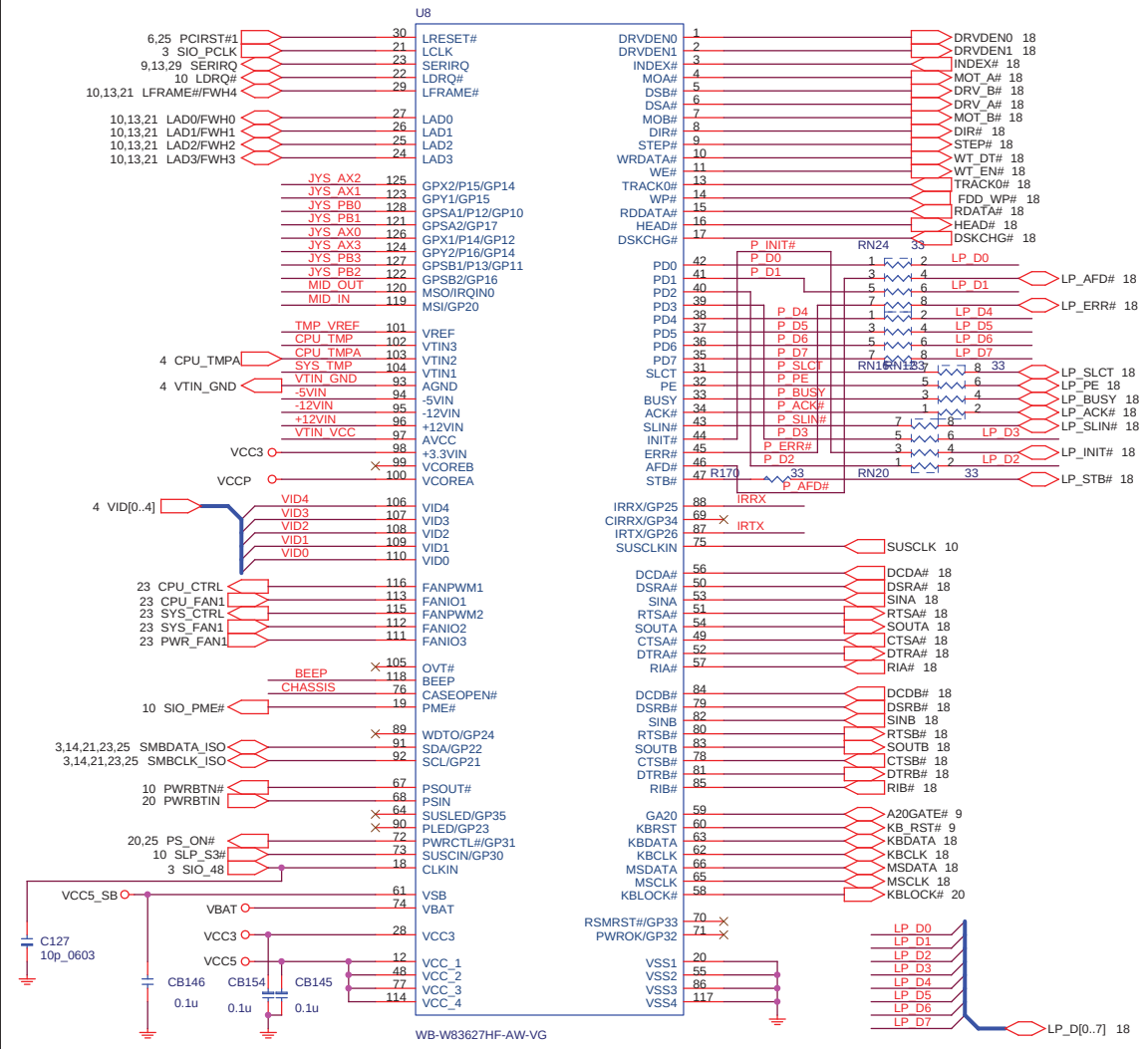

THERMAL RESISTOR BLOCK

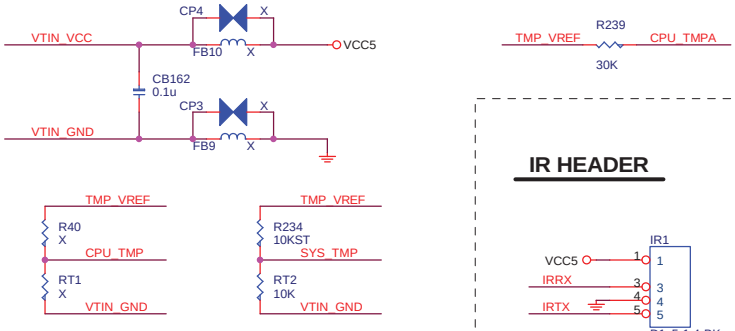

NOTE: LOCATE INSIDE SOCKET478

NOTE: LOCATE CLOSE STATUS PANEL

IR HEADER

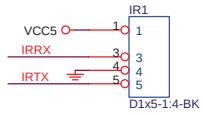

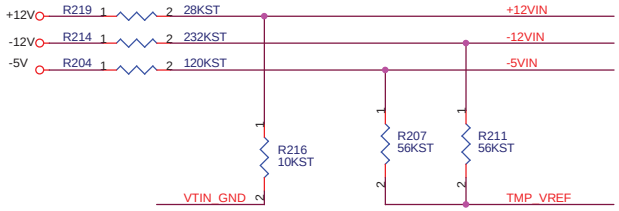

Chasiss Intrusion Header

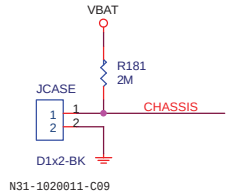

SPEAKER BLOCK

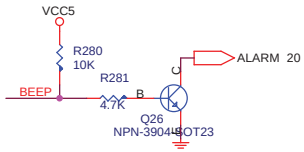

GAME/MIDI CONNECTOR

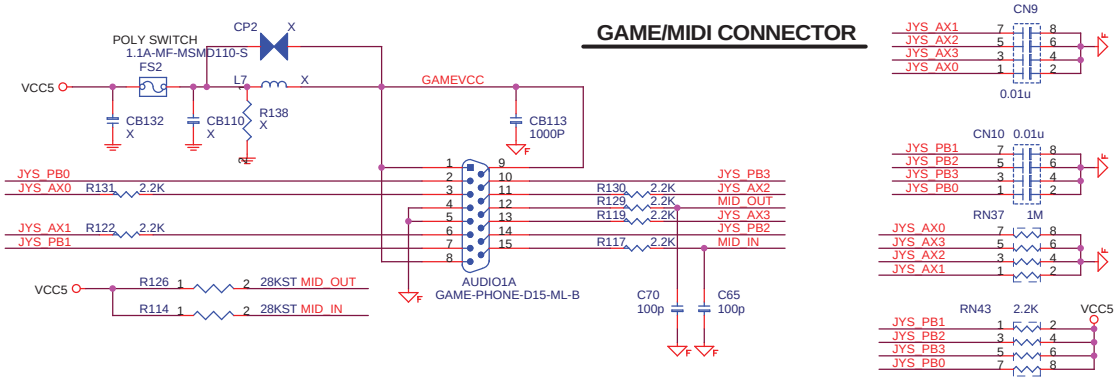

LPC I/O DECOUPLING CAPACITORS

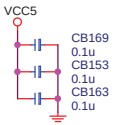

SUPER I/O STRAPPING RESISTOR

SOUTA	L: Disable KBC	H: Enable KBC
SOUTB	L: 24MHZ	H: 48MHZ
RTSA#	L: CFAD=2E	H: CFAD=4E
DTRA#	L: PNP Default	H: PNP no Default

Micro Star Restricted Secret

Title	LPC I/O & GAME PORT	Rev 300
Document Number	MS-6398E	
MICRO-STAR INT'L CO.,LTD. No. 69, Li-De St, Jung-He City, Taipei Hsien, Taiwan http://www.msi.com.tw	Last Revision Date: Wednesday, July 03, 2002	
	Sheet 11 of 30	

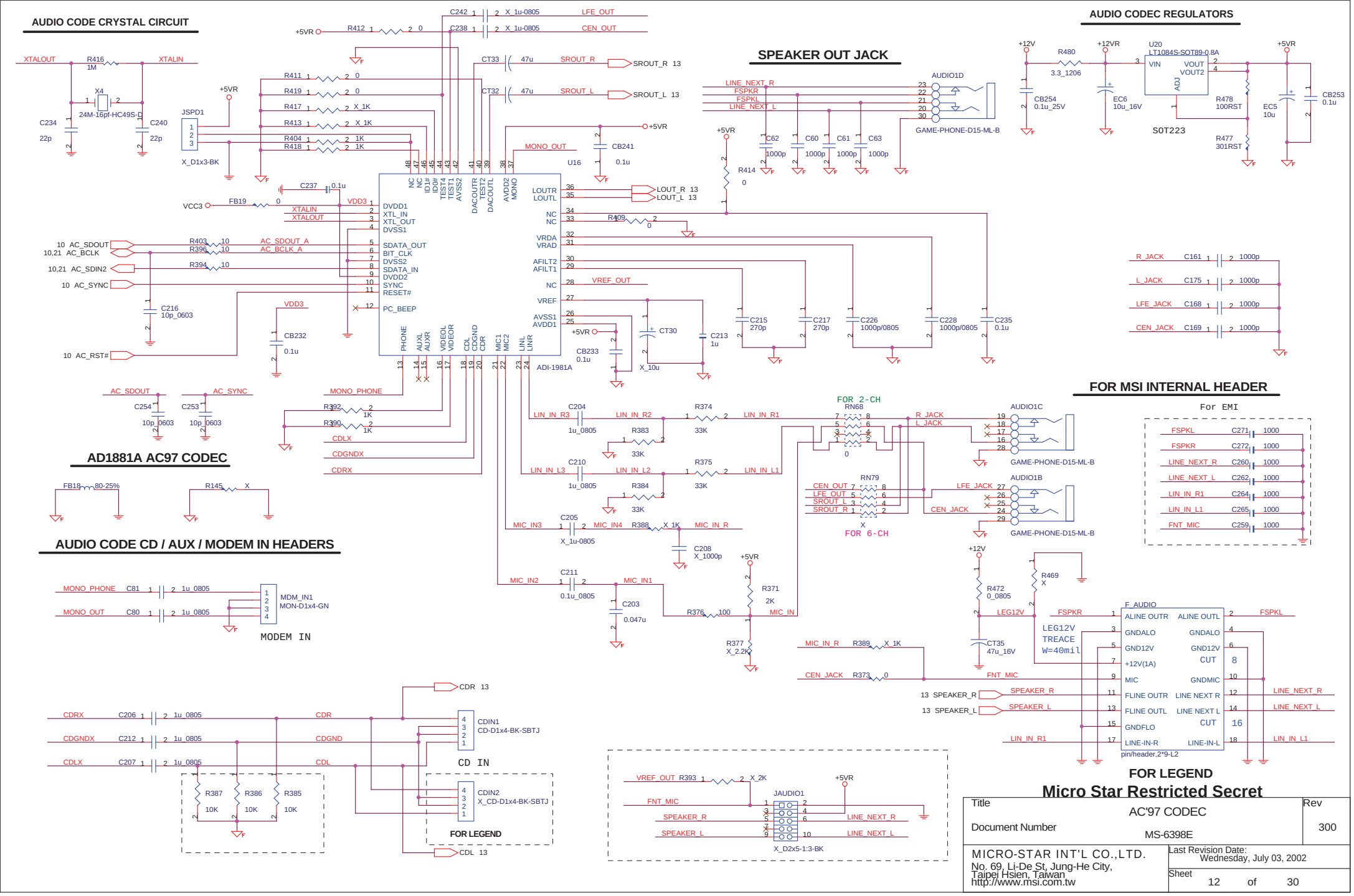
AUDIO CODE CRYSTAL CIRCUIT
AUDIO CODEC REGULATORS
SPEAKER OUT JACK
AD1881A AC97 CODEC
FOR MSI INTERNAL HEADER
AUDIO CODE CD / AUX / MODEM IN HEADERS
MODEM IN
CD IN
FOR LEGEND
ADI-1981A
U16
U20
LT1084S-SOT89-0.8A
SOT223
AUDIO1D
AUDIO1C
AUDIO1B
GAME-PHONE-D15-ML-B
F_AUDIO
pin/header,2*9-L2
JAUDIO1
X_D2x5-1:3-BK
MDM_IN1
MON-D1x4-GN
CDIN1
CD-D1x4-BK-SBTJ
CDIN2
X_CD-D1x4-BK-SBTJ
JSPD1
X_D1x3-BK
X4
24M-16pf-HC49S-D
FOR 2-CH
FOR 6-CH
LEG12V
TREACE
W=40mil
For EMI
Micro Star Restricted Secret
Title
AC'97 CODEC
Rev
300
Document Number
MS-6398E
MICRO-STAR INT'L CO.,LTD.
No. 69, Li-De St, Jung-He City,
Taipei Hsien, Taiwan
http://www.msi.com.tw
Last Revision Date:
Wednesday, July 03, 2002
Sheet
12
of
30

SPEAKER OUT CIRCUIT

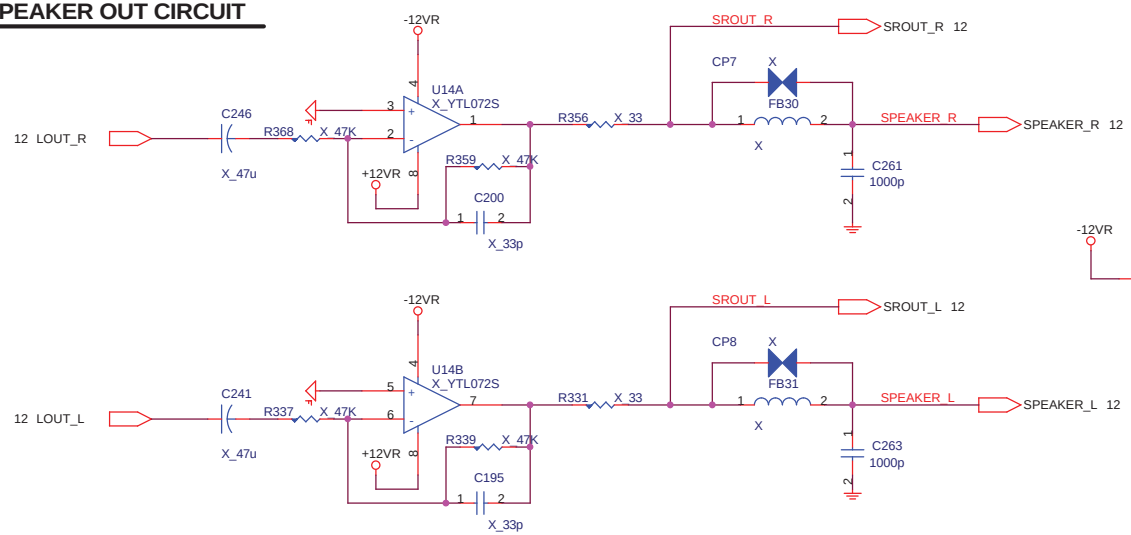

CD PANEL PLAY WITHOUT PC POWER_ON

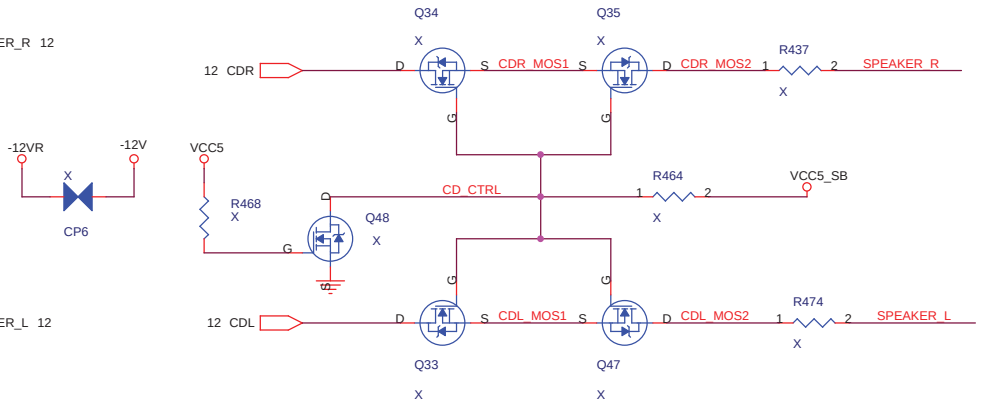

MEMORY STICK CONTROLLER

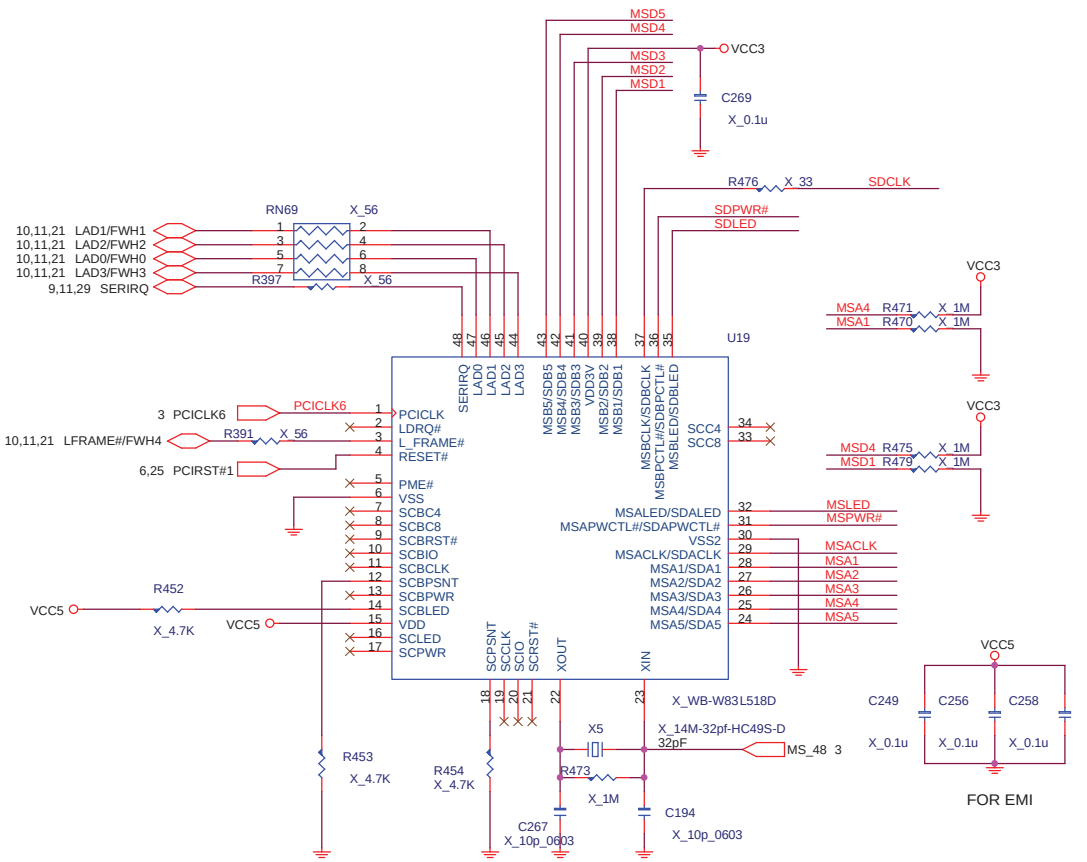

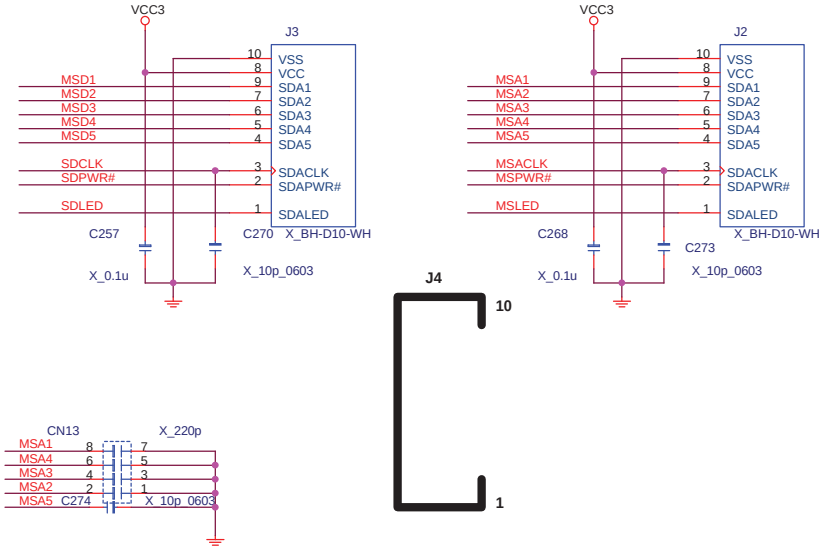

Micro Star Restricted Secret

Title	Audio Amplifier & CD Panel Play	Rev 300
Document Number	MS-6398E	
MICRO-STAR INT'L CO.,LTD. No. 69, Li-De St, Jung-He City, Taipei Hsien, Taiwan http://www.msi.com.tw	Last Revision Date: Wednesday, July 03, 2002	
	Sheet 13 of 30	

SYSTEM MEMORY

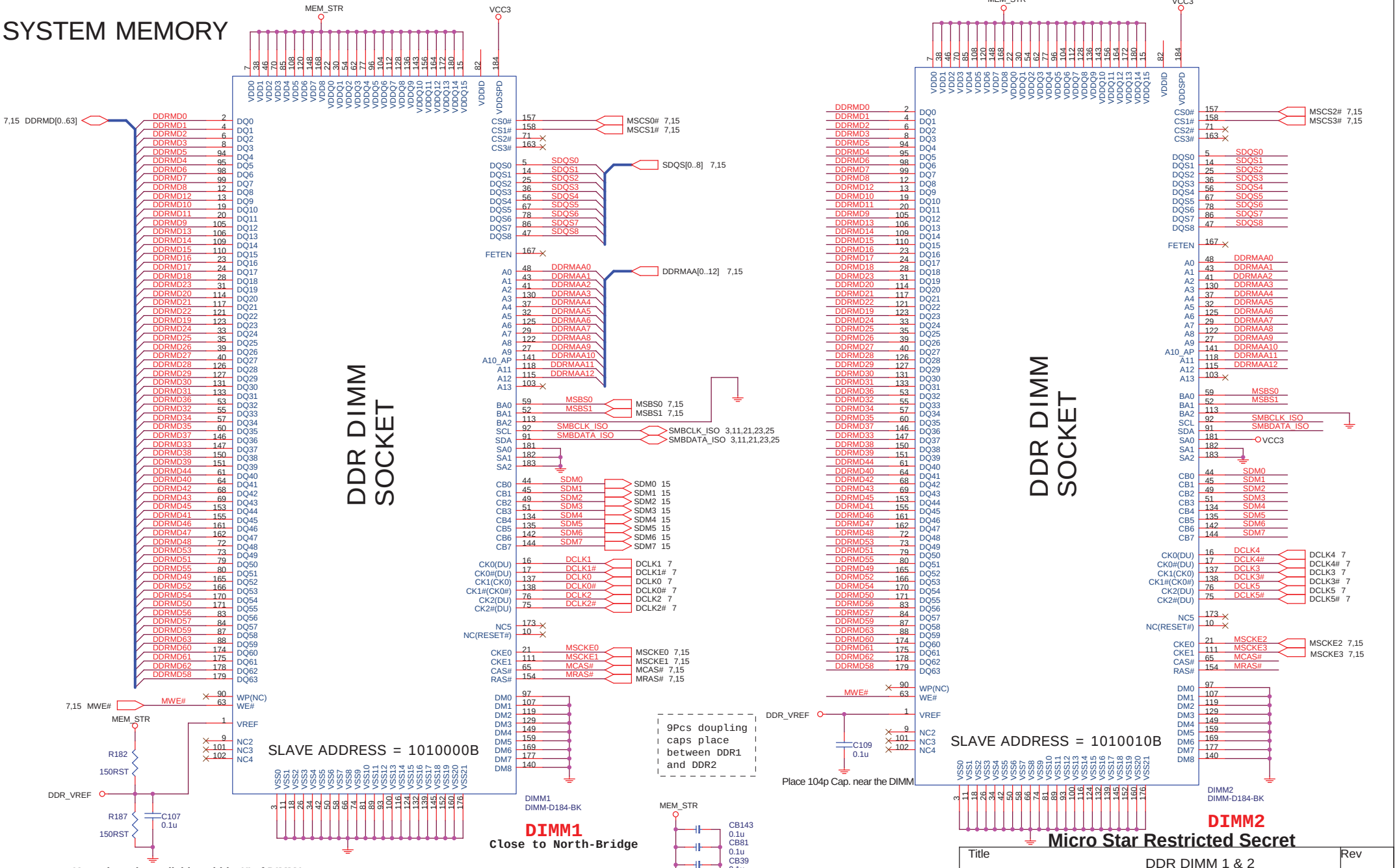

Keep the voltage divider within 1" of DIMM1.
Trace width 12 mil with 12 mil space.
Place 104p Cap. near the DIMM

Micro Star Restricted Secret

Title	DDR DIMM 1 & 2	Rev 300
Document Number	MS-6398E	
MICRO-STAR INT'L CO.,LTD. No. 69, Li-De St, Jung-He City, Taipei Hsien, Taiwan http://www.msi.com.tw	Last Revision Date: Wednesday, July 03, 2002	
	Sheet 14 of 30	

DDR TERMINATORS

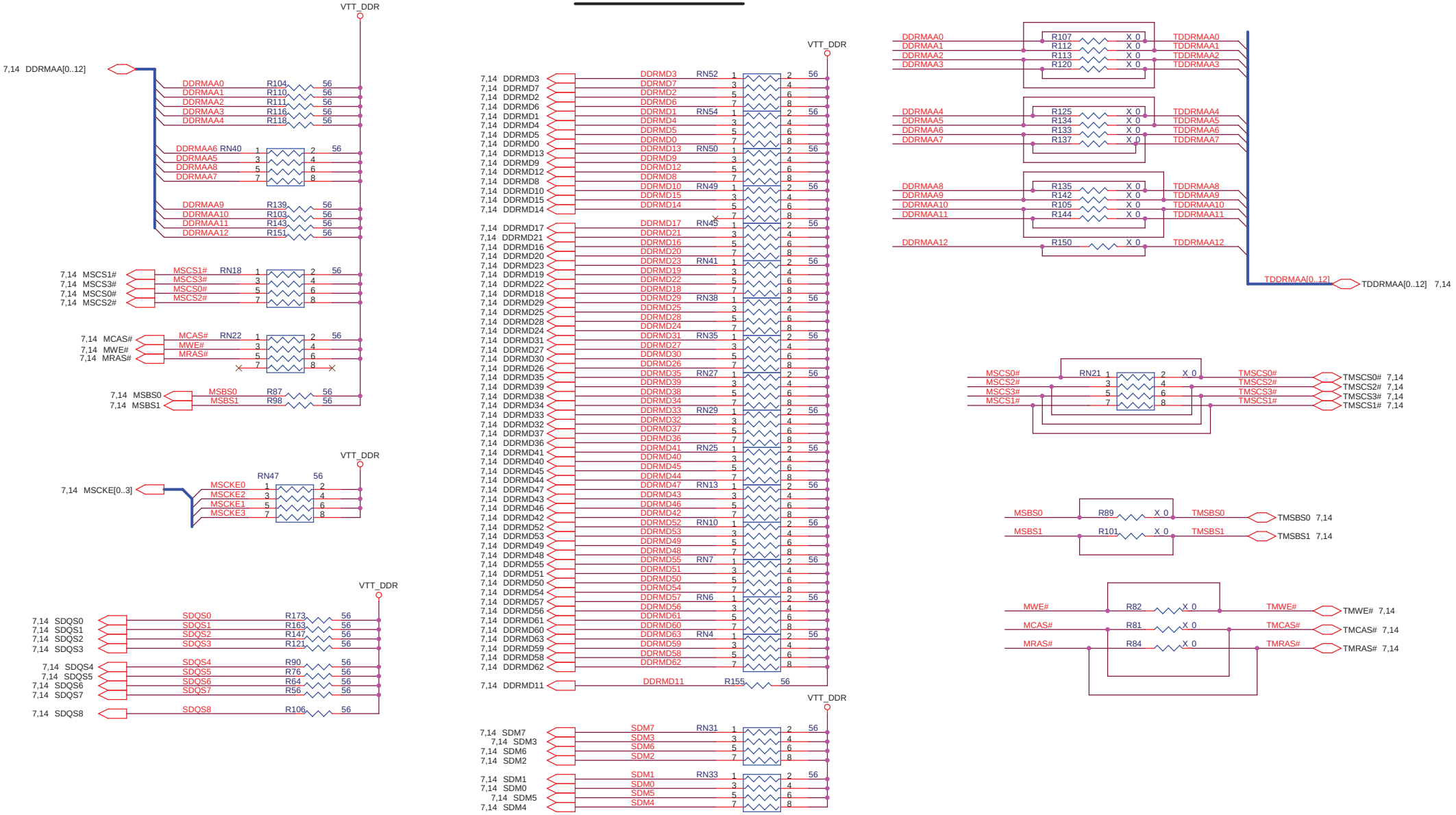

Micro Star Restricted Secret

Title	DDR Terminator Resistor	Rev
Document Number	MS-6398E	300
MICRO-STAR INT'L CO.,LTD. No. 69, Li-De St, Jung-He City, Taipei Hsien, Taiwan http://www.msi.com.tw	Last Revision Date: Wednesday, July 03, 2002	
	Sheet 15 of 30	

SDM6
SDQS0

AGP 1.5V 2X/4X SLOT(AGP VER:2.0 COMPLY)

VCC5 = 60mils trace / 15 mils space

AGP Slot Imax

VCC_AGP 2.0A
VCC3 6.0A
VCC12 1.0A
VCC5 2.0A
VCC3_SB 0.375A

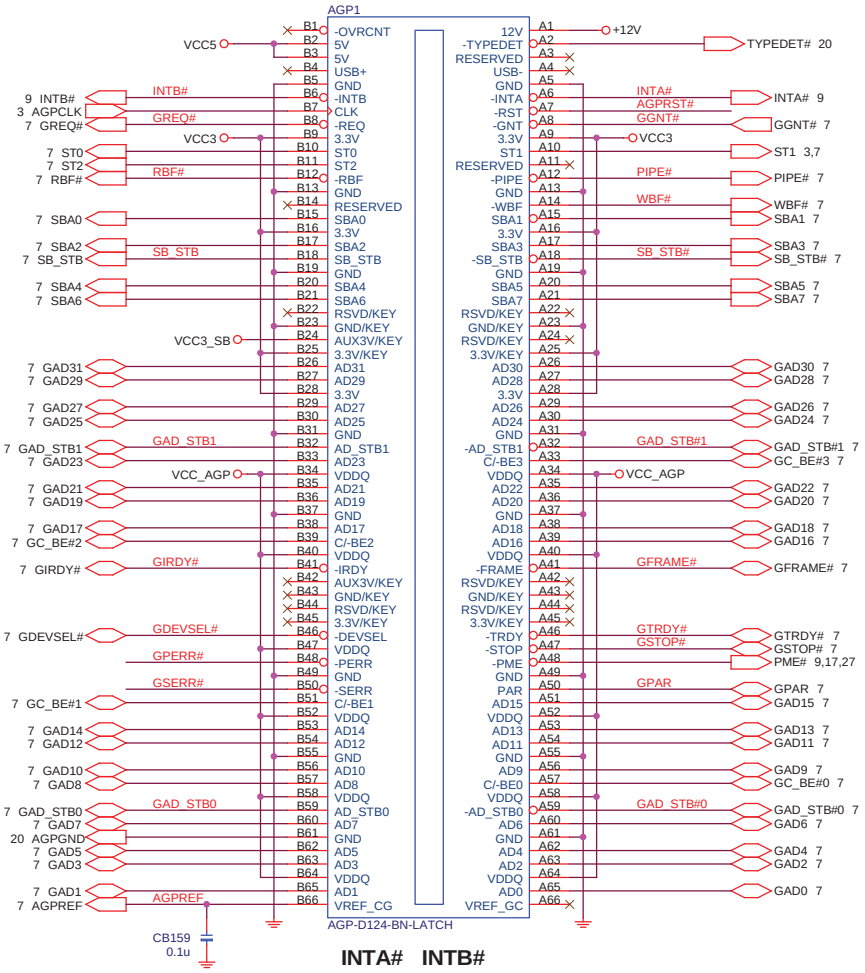

INTA# INTB#

AGP SIGNAL REFERENCE CIRCUIT

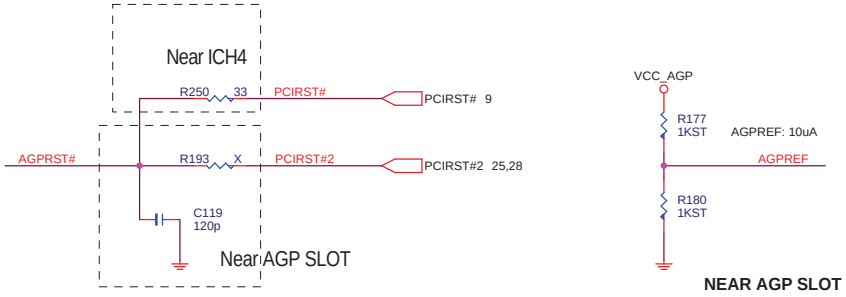

NEAR AGP SLOT

AGP TERMINATION RESISTORS

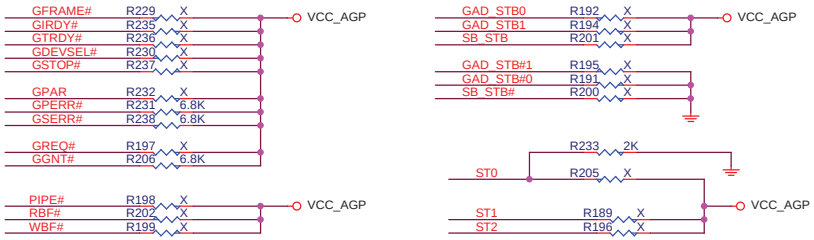

LESS 100MILS STUB TRACE LENGTH FOR 2/4X
LESS 500MIL FOR 1X MUST BE FOLLOWING.

Place these resistors between AGP slot & GMCH

AGP SLOT DECOUPLING CAPACITORS

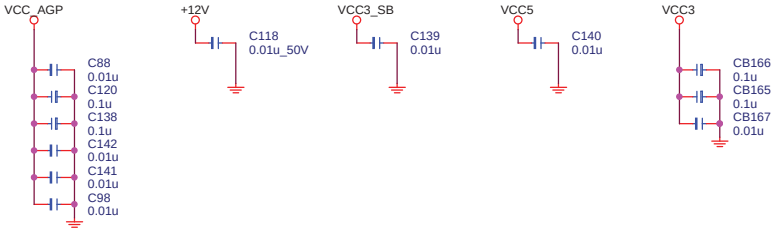

Micro Star Restricted Secret

Title	AGP 2.0	Rev
Document Number	MS-6398E	300
MICRO-STAR INT'L CO.,LTD. No. 69, Li-De St, Jung-He City, Taipei Hsien, Taiwan http://www.msi.com.tw	Last Revision Date: Wednesday, July 03, 2002	
	Sheet 16 of 30	

PCI SLOT 1 (PCI VER: 2.2 COMPLY)

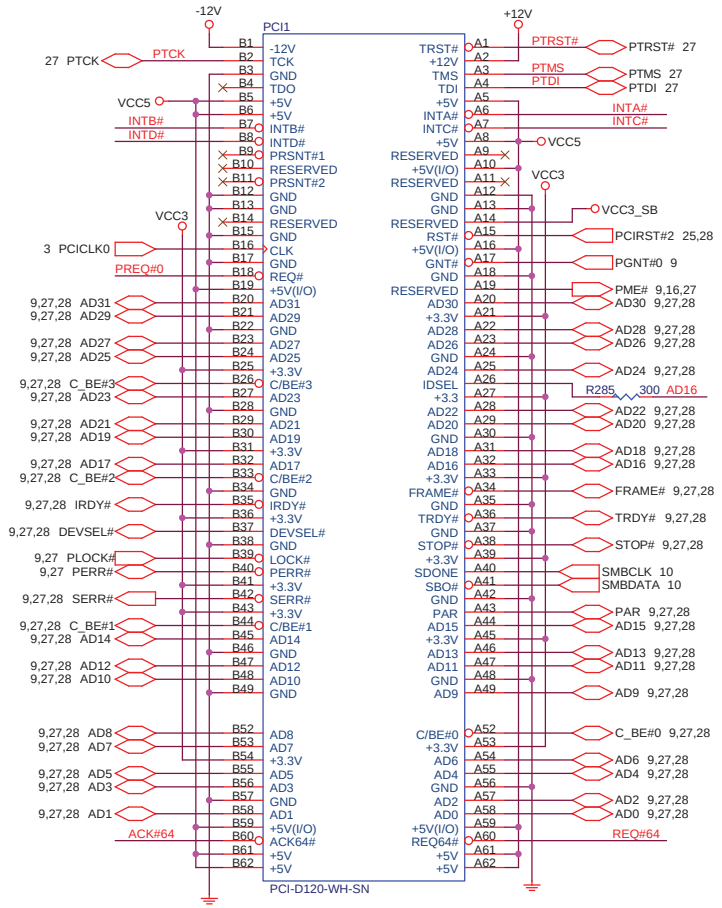

IDSEL = AD16
MASTER = PREQ0
INTA#

PCI SLOT 2 (PCI VER: 2.2 COMPLY)

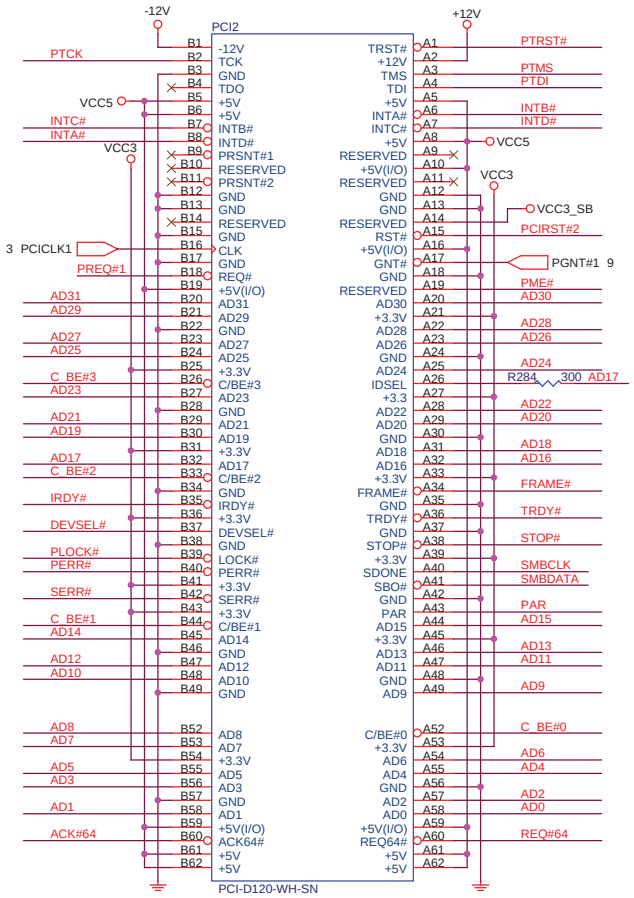

IDSEL = AD17
MASTER = PREQ1
INTB#

PCI SLOT 3 (PCI VER: 2.2 COMPLY)

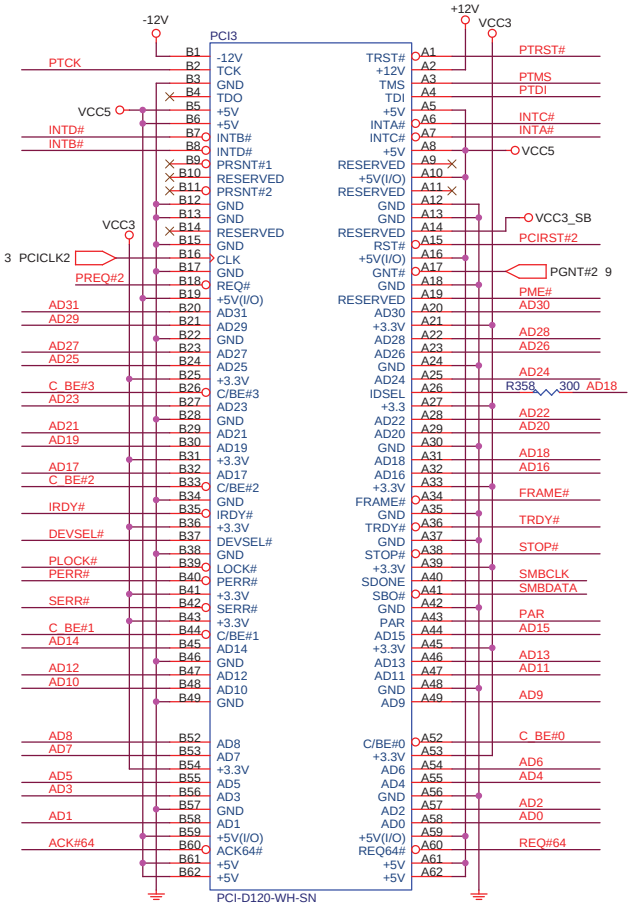

IDSEL = AD18
MASTER = PREQ2
INTC#

PCI PULL-UP / DOWN RESISTORS

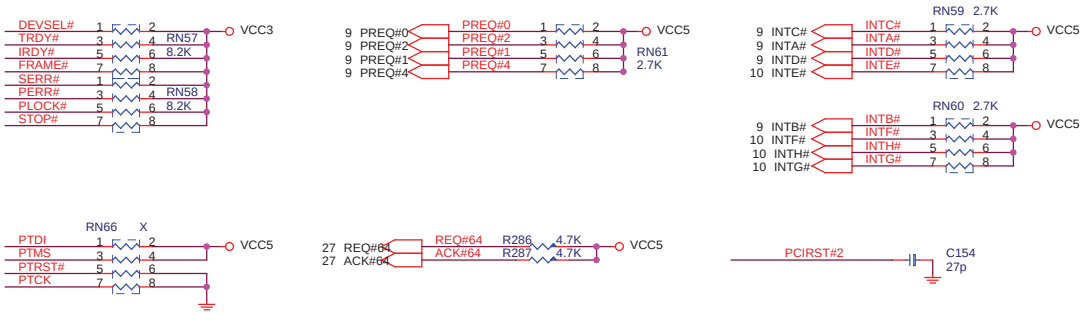

PCI SLOT DECOUPLING CAPACITORS

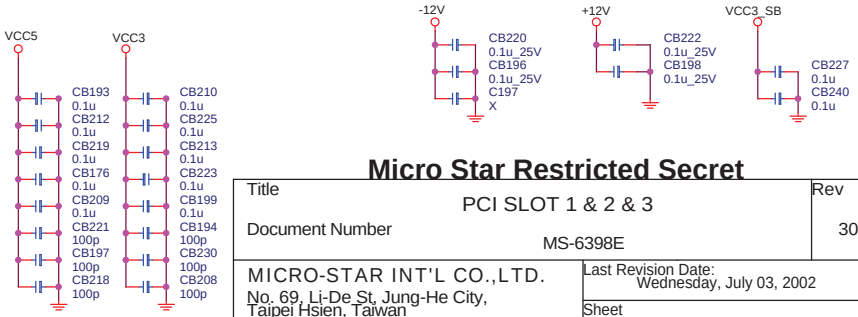

Micro Star Restricted Secret

Title	PCI SLOT 1 & 2 & 3	Rev
Document Number	MS-6398E	300
MICRO-STAR INT'L CO.,LTD. No. 69, Li-De St, Jung-He City, Taipei Hsien, Taiwan http://www.msi.com.tw	Last Revision Date: Wednesday, July 03, 2002	
	Sheet 17 of 30	

SERIAL PORT 1

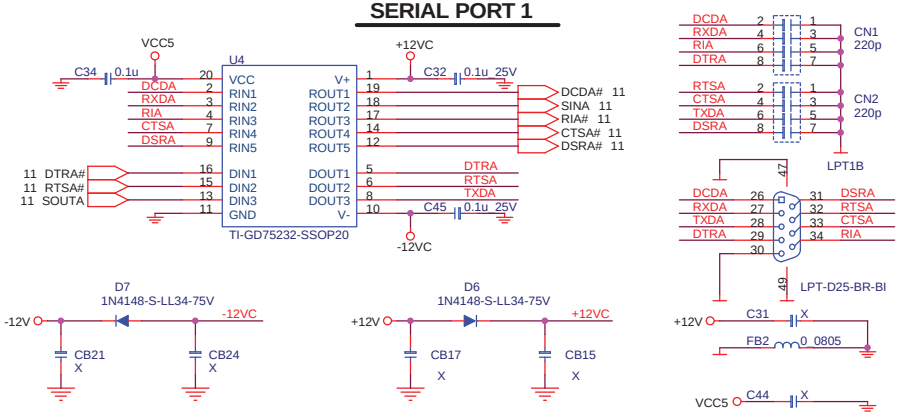

SERIAL PORT 2

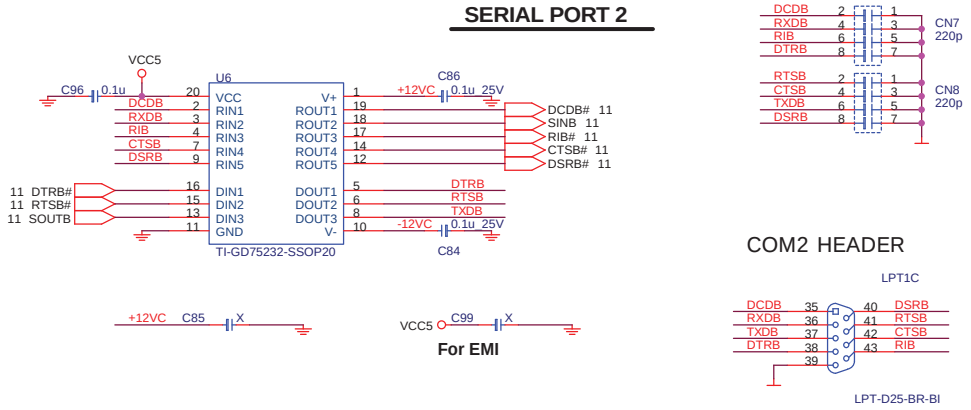

PARALLAL PORT

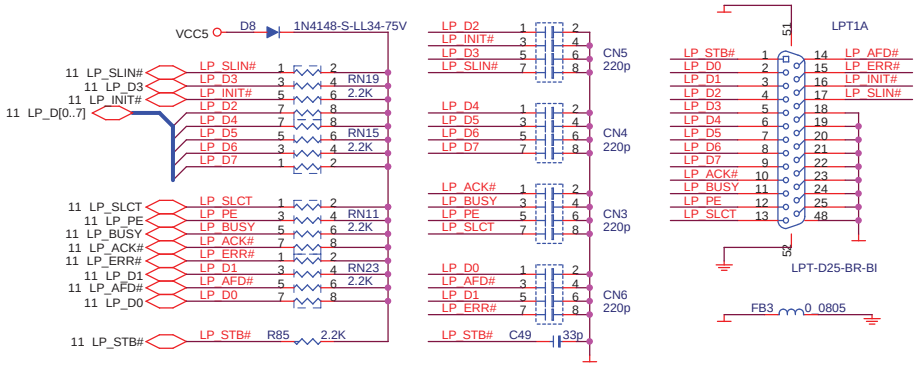

PS2 KEYBOARD & MOUSE CONNECTOR

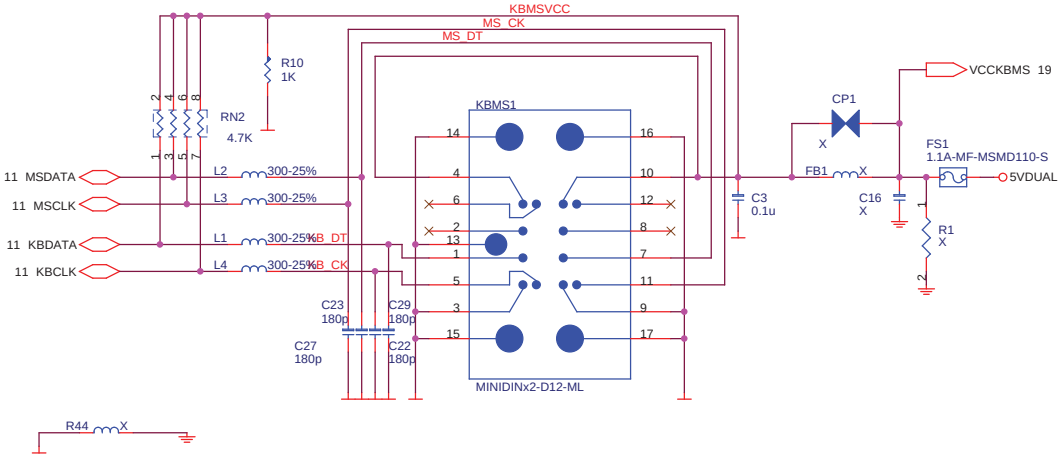

FLOPPY CONNECTOR

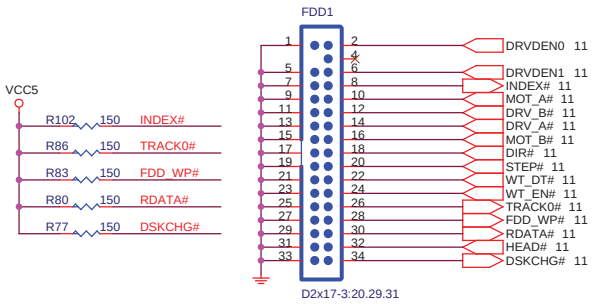

Wake On Modem Header

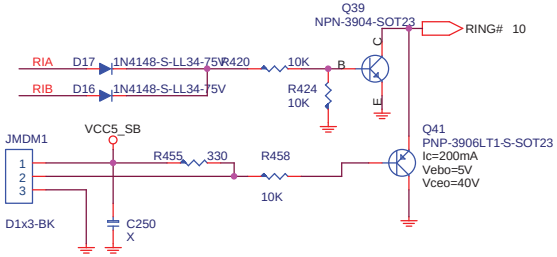

Wake On LAN Header

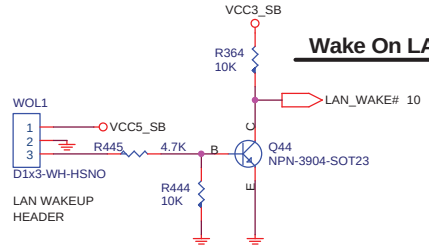

Micro Star Restricted Secret

Title	KB,MS,SERIAL,PARALLEL & FLOPPY	Rev
Document Number	MS-6398E	300
MICRO-STAR INT'L CO.,LTD. No. 69, Li-De St, Jung-He City, Taipei Hsien, Taiwan http://www.msi.com.tw	Last Revision Date: Wednesday, July 03, 2002	
	Sheet 18 of 30	

POWER CIRCUIT FOR USB PORT 0,1

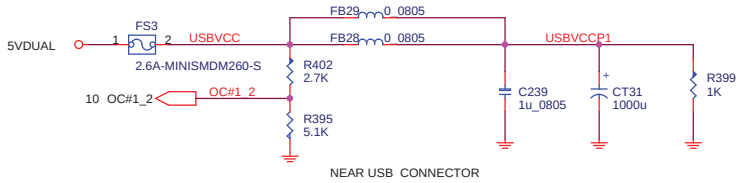

FRONT PANEL USB CONNECTOR FOR USB PORT 0,1

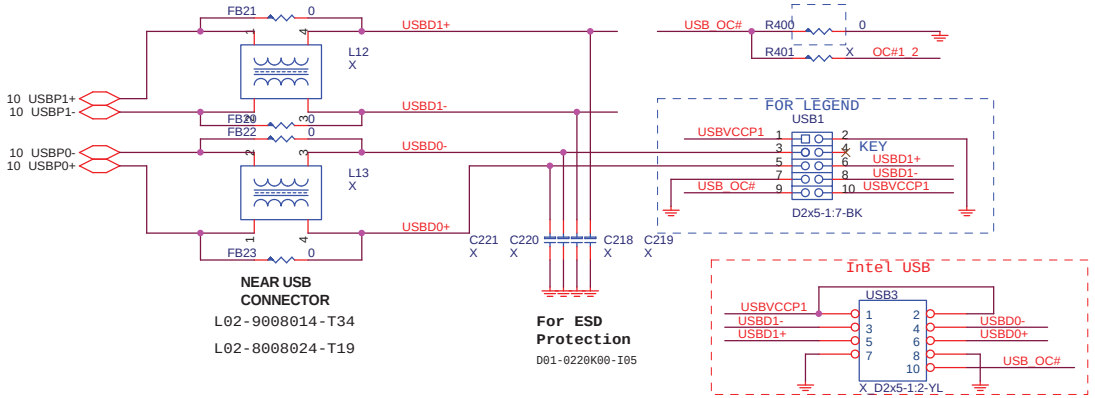

REAR PANEL USB CONNECTOR FOR USB PORT 2,3

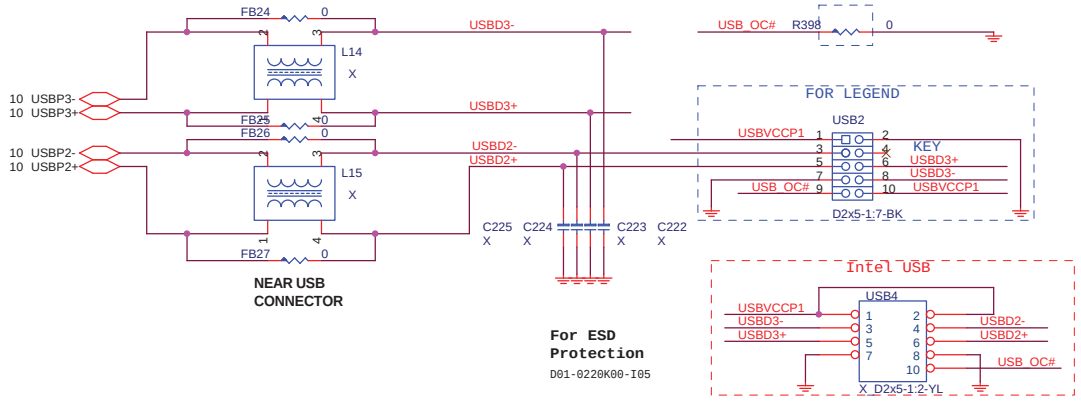

POWER CIRCUIT FOR USB PORT 4,5

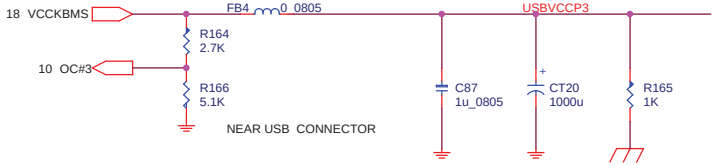

* USB Trace width : 7.5 mils
* USB Trace Spacing : Low speed 20 mils, High speed 50 mils
* Differential USB Signlas Trace, Spacing : 7.5 mils
* USB Power Trace must be 40mils width
* Length(longest)-Length(shortest)<150mils
* Maxium trace length <16"

REAR PANEL USB CONNECTOR FOR USB PORT 4,5

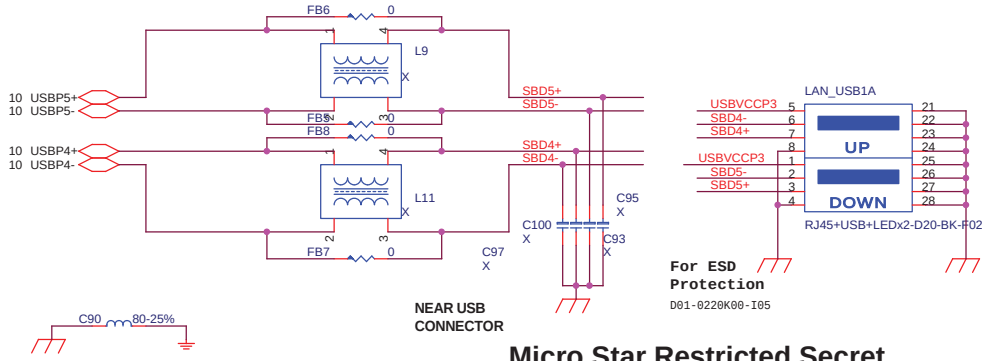

Micro Star Restricted Secret

Title	USB Connectors	Rev 300
Document Number	MS-6398E	
MICRO-STAR INT'L CO.,LTD. No. 69, Li-De St, Jung-He City, Taipei Hsien, Taiwan http://www.msi.com.tw	Last Revision Date: Wednesday, July 03, 2002	
	Sheet 19 of 30	

ATX CONNECTOR

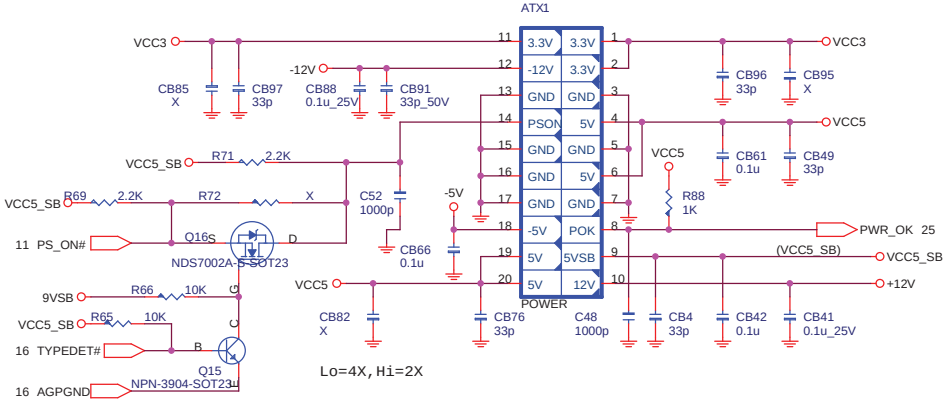

REGULATORS OUTPUT DECOUPLING CAPACITORS

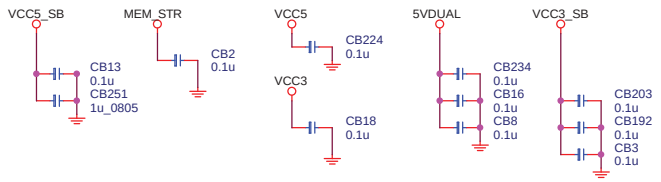

MSI/Legend Front Panel

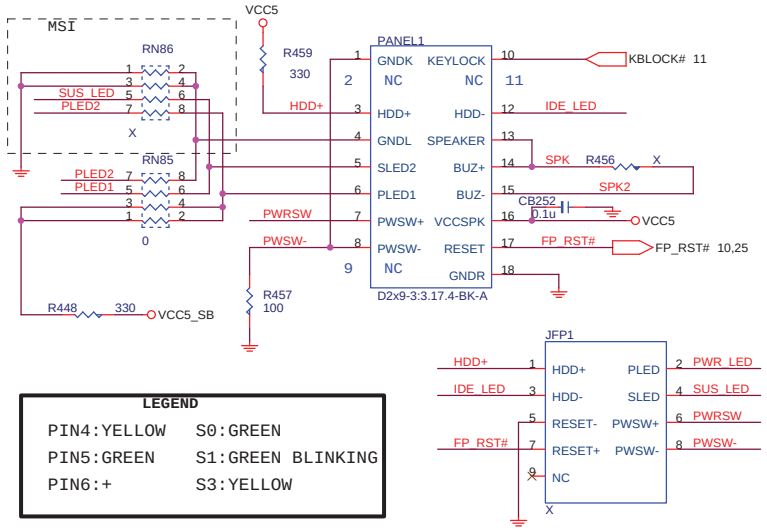

LEGEND

PIN4:YELLOW	S0:GREEN
PIN5:GREEN	S1:GREEN BLINKING
PIN6:+	S3:YELLOW

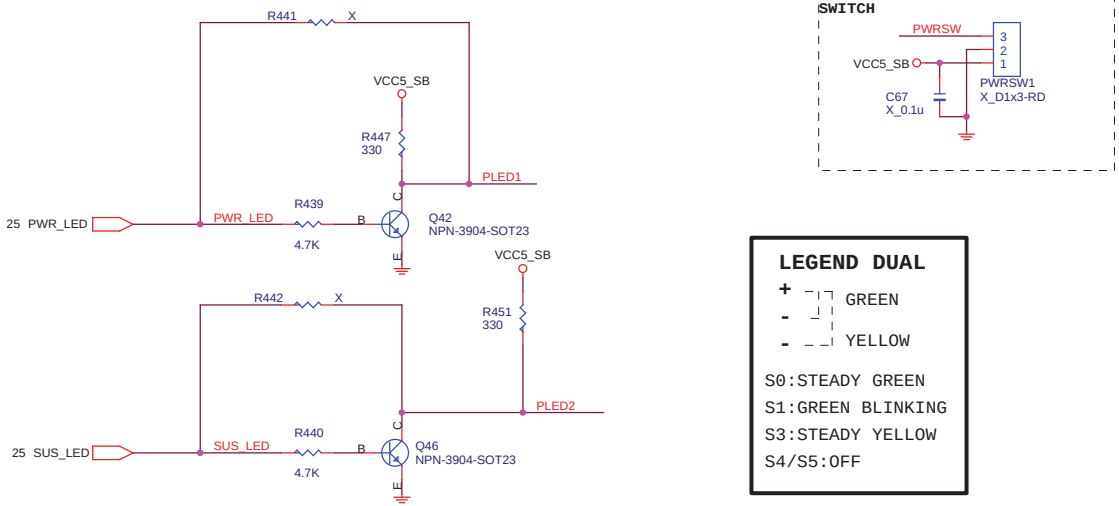

LEGEND DUAL

+	GREEN
-	YELLOW
-	

S0:STEADY GREEN
S1:GREEN BLINKING
S3:STEADY YELLOW
S4/S5:OFF

POWER BUTTON

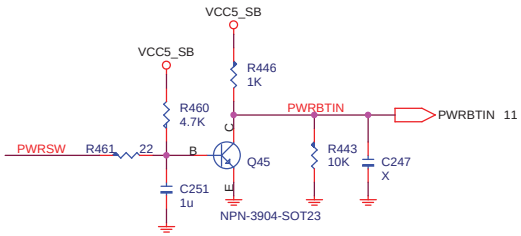

SLEEP BUTTON

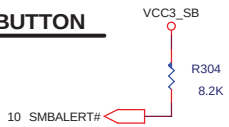

SPEAKER

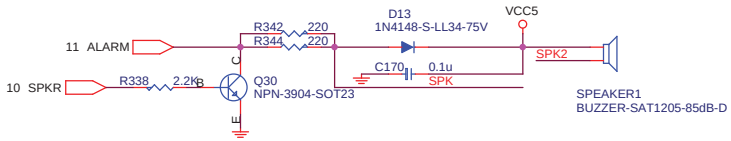

Micro Star Restricted Secret

Title	Front Panel,Power Conn. & Speaker	Rev
Document Number	MS-6398E	300
MICRO-STAR INT'L CO.,LTD. No. 69, Li-De St, Jung-He City, Taipei Hsien, Taiwan http://www.msi.com.tw	Last Revision Date: Wednesday, July 03, 2002	
	Sheet 20 of 30	

Firware Hub (FWH)

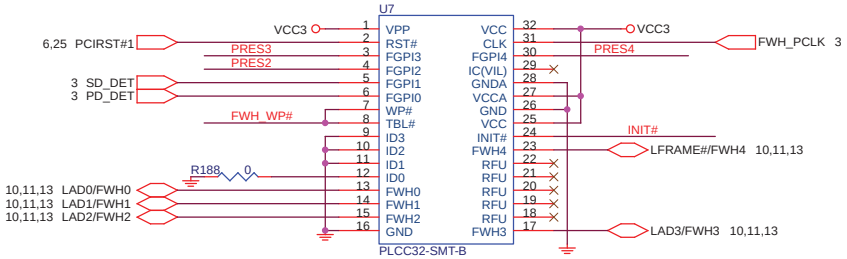

M31-49004A8-S20

FWH RESISTORS

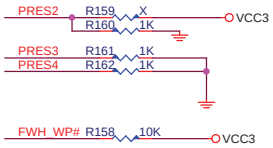

PCB OTHER COMPONENT

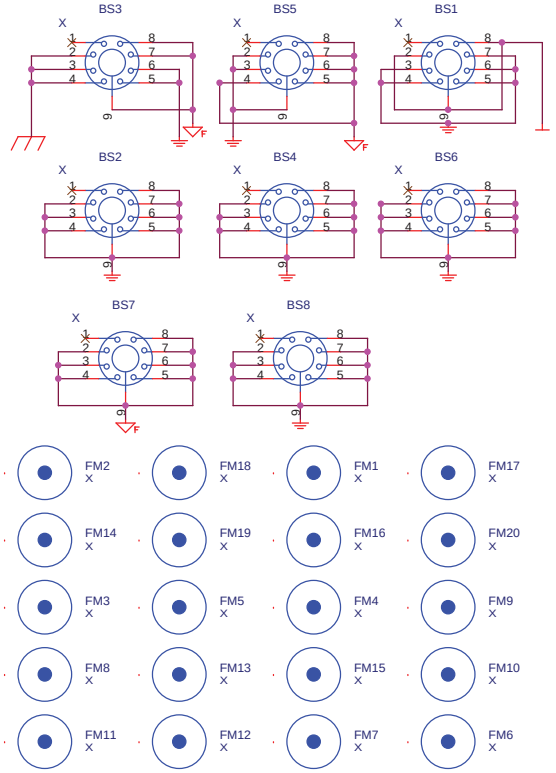

FWH DECOUPLING CAPACITORS

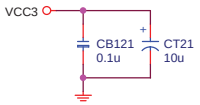

Place Cap. as Close to FWH< 350 mil

FWH write protect

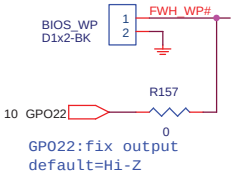

FWH INIT Signal Voltage Translation Block

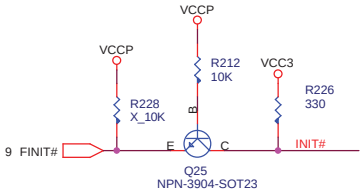

* AC'97 Trace width : 5 mils
* AC'97 Trace Spacing : 5 mils
* Maxium trace length <8"
* Length(longest)-Length(shortest)<150mils

CNR RISER

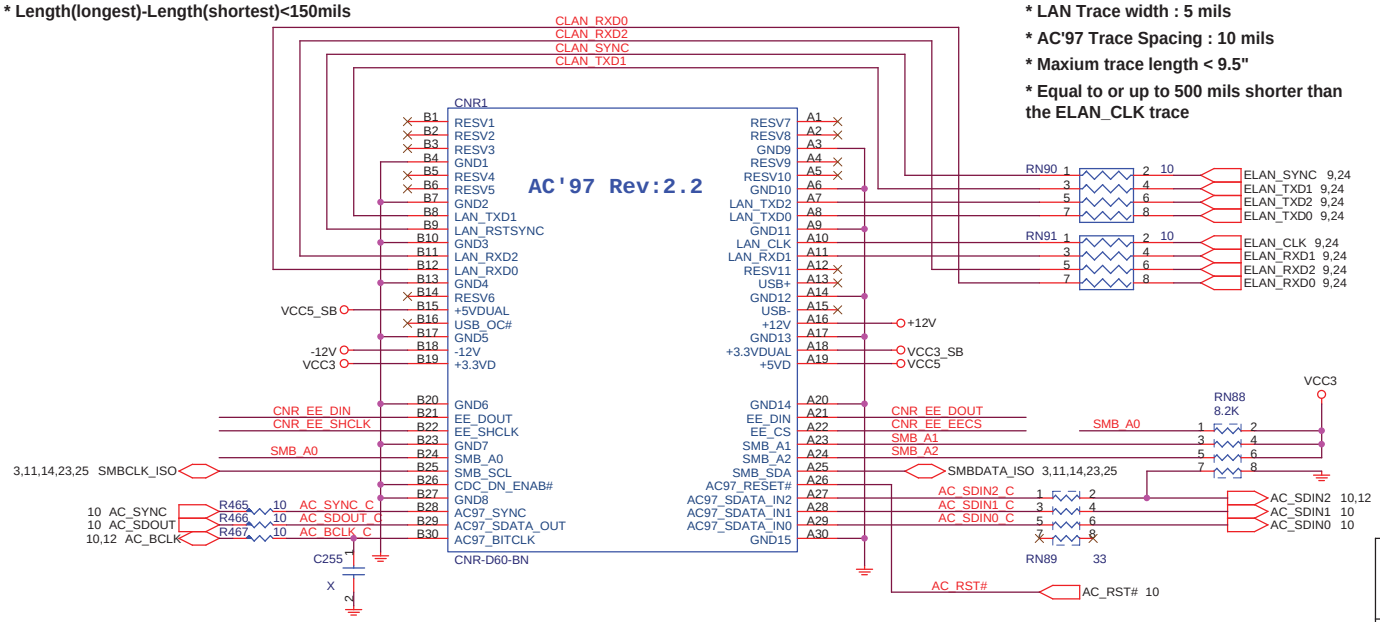

* LAN Trace width : 5 mils
* AC'97 Trace Spacing : 10 mils
* Maxium trace length < 9.5"
* Equal to or up to 500 mils shorter than the ELAN_CLK trace

SIMULATION TRACE

Very close to ICH4

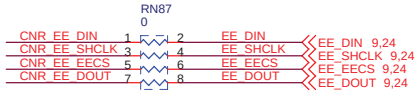

Micro Star Restricted Secret

Title	FWH	Rev
Document Number	MS-6398E	300
MICRO-STAR INT'L CO.,LTD. No. 69, Li-De St, Jung-He City, Taipei Hsien, Taiwan http://www.msi.com.tw	Last Revision Date: Wednesday, July 03, 2002	
	Sheet 21 of 30	

1500uF/16V
Original source:
C94-1521641-N07(NCC)
Second source:
C94-1521641-R07(RUBYCON)
C94-1521641-N10(NICHICON)

Hi-side MosFET
Original source:
15N03 : D03-15N030B-I14(INFINEON)
Second source:
FDB6035AL : D03-6035ALB-F01(FAIRCHILD)
FDB6030BL : D03-6030B0B-F01(FAIRCHILD)

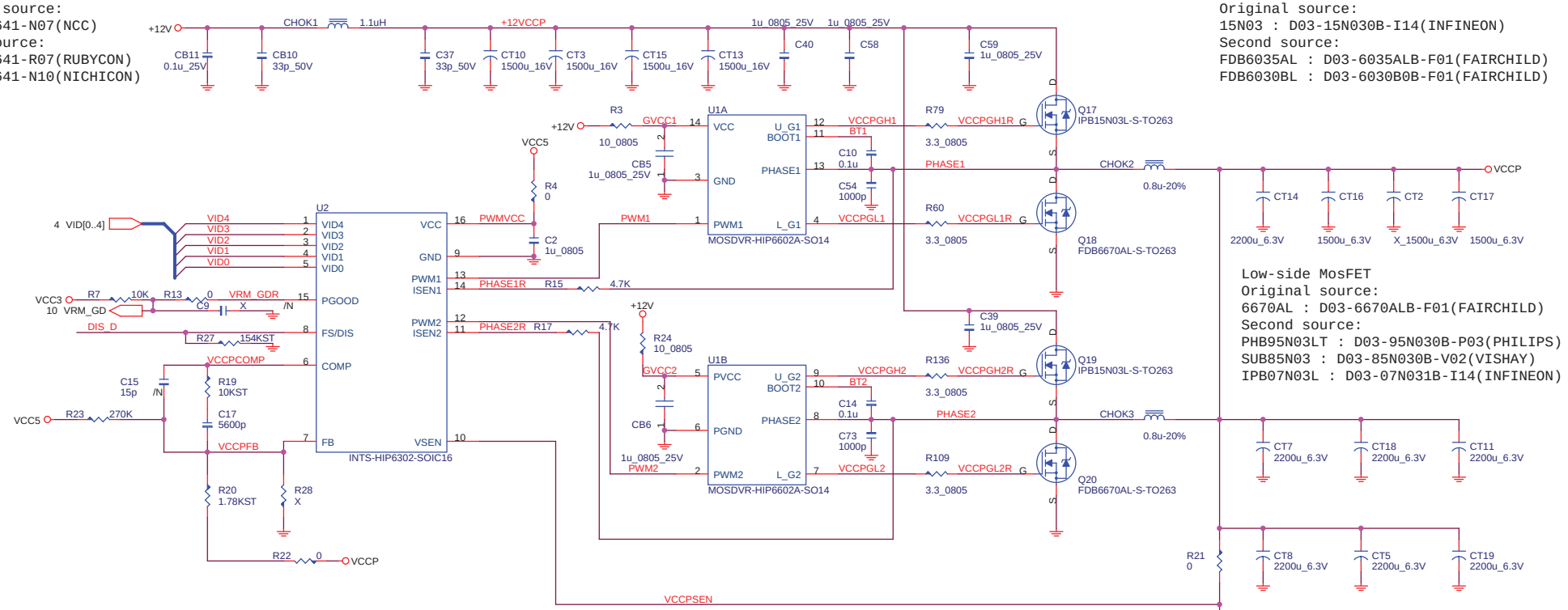

Low-side MosFET
Original source:
6670AL : D03-6670ALB-F01(FAIRCHILD)
Second source:
PHB95N03LT : D03-95N030B-P03(PHILIPS)
SUB85N03 : D03-85N030B-V02(VISHAY)
IPB07N03L : D03-07N031B-I14(INFINEON)

NOTE: INSIDE ON CPU SOCKET.

HIP6301 -- VRM 9.0/9.2

VID4	VID3	VID2	VID1	VID0	VDC(V)
1	1	1	1	1	OFF
1	1	1	1	0	1.100
1	1	1	0	1	1.125
1	1	1	0	0	1.150
1	1	0	1	1	1.175
1	1	0	1	0	1.200
1	1	0	0	1	1.225
1	1	0	0	0	1.250
1	0	1	1	1	1.275
1	0	1	1	0	1.300

VID4	VID3	VID2	VID1	VID0	VDC(V)
1	0	1	0	1	1.325
1	0	1	0	0	1.350
1	0	0	1	1	1.375
1	0	0	1	0	1.400
1	0	0	0	1	1.425
1	0	0	0	0	1.450
0	1	1	1	1	1.475
0	1	1	1	0	1.500
0	1	1	0	1	1.525
0	1	1	0	0	1.550

1500uF/6.3V
Original source:
C94-1520631-P01(PANASONIC)
Second source:
C94-1520631-R07(RUBYCON)
C94-1520631-N07(NCC)

2200uF/6.3V
Original source:
C94-2220611-R07(RUBYCON)
Second source:
C94-2220611-N10(NICHICON)
C94-2220611-N07(NCC)

2-Phase VRM Output-Chock :
L04-08A7031-W15 &
L04-08A7031-T15

ATX12V POWER CONNECTOR

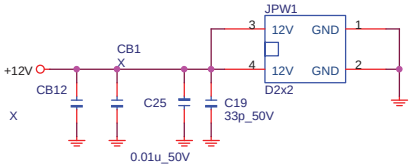

VID PULL-UP RESISTORS

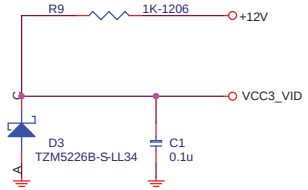

CHECK THIS

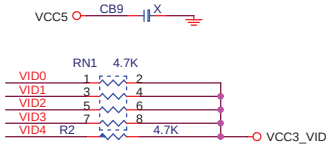

PWM GOOD

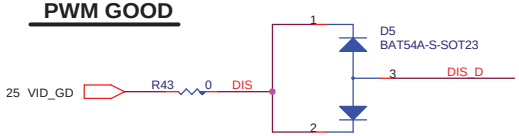

Micro Star Restricted Secret

Title	VRM 9.0	Rev
Document Number	MS-6398E	300

MICRO-STAR INT'L CO.,LTD.
No. 69, Li-De St, Jung-He City,
Taipei Hsien, Taiwan
http://www.msi.com.tw

Last Revision Date: Wednesday, July 03, 2002

Sheet 22 of 30

SMBus Isolation

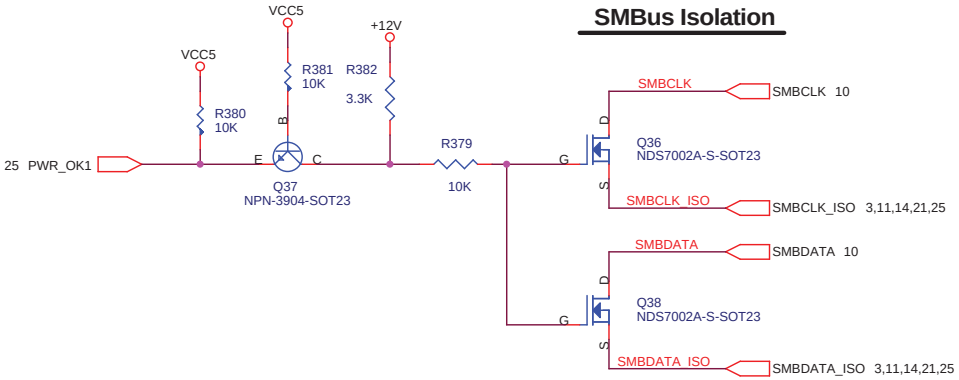

1.5V STANDBY POWER TRANSLATOR

(40mils trace / 20 mils space)

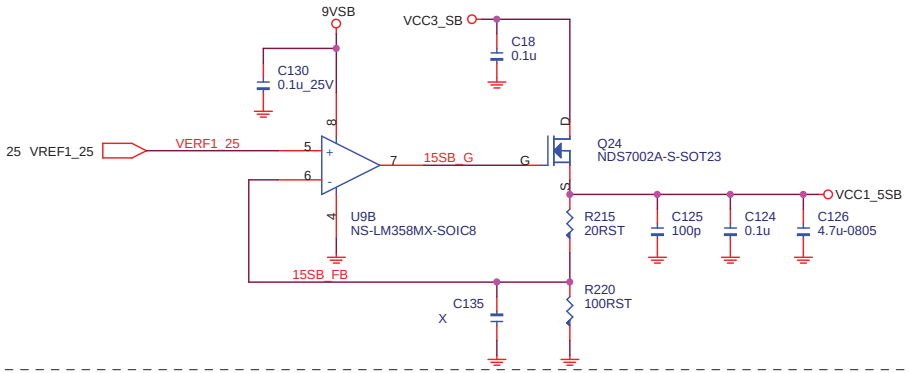

CPU FAN

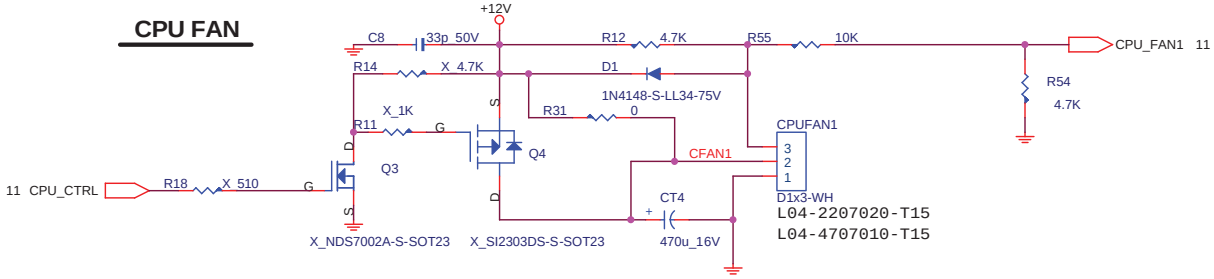

SYSTEM FAN

Rear FAN, Close to CPU

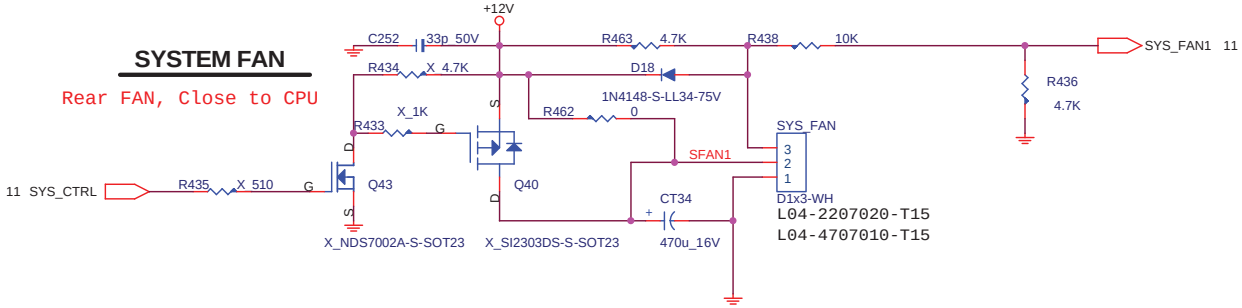

POWER FAN

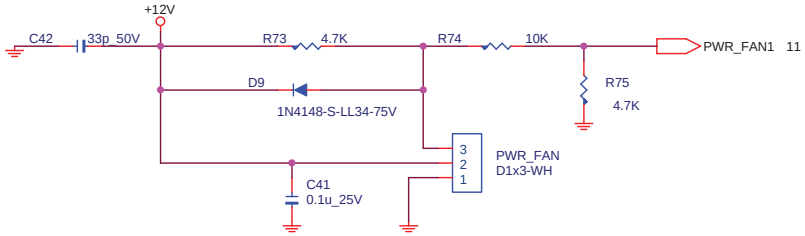

AGP4X & GMCH 1.5V POWER TRANSLATOR

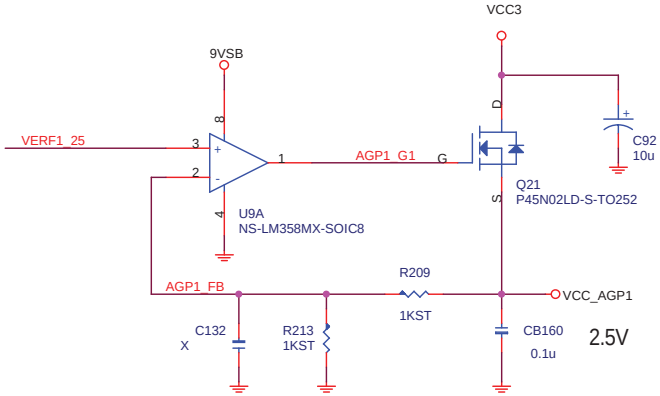

Micro Star Restricted Secret

Title	SMBUS Isolation & FAN Conn.	Rev 300
Document Number	MS-6398E	
MICRO-STAR INT'L CO.,LTD. No. 69, Li-De St, Jung-He City, Taipei Hsien, Taiwan http://www.msi.com.tw	Last Revision Date: Wednesday, July 03, 2002	
	Sheet 23 of 30	

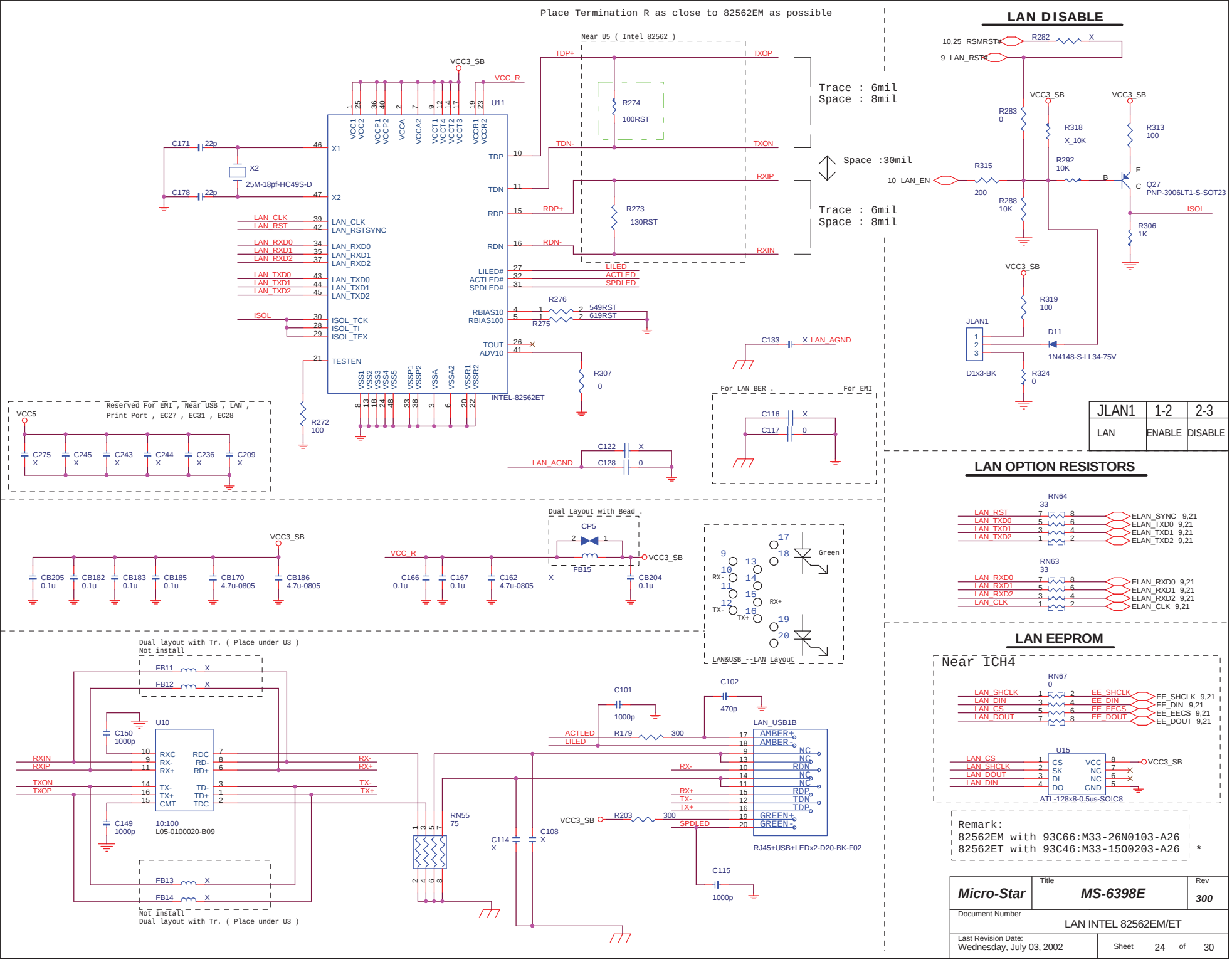

JLAN1	1-2	2-3
LAN	ENABLE	DISABLE

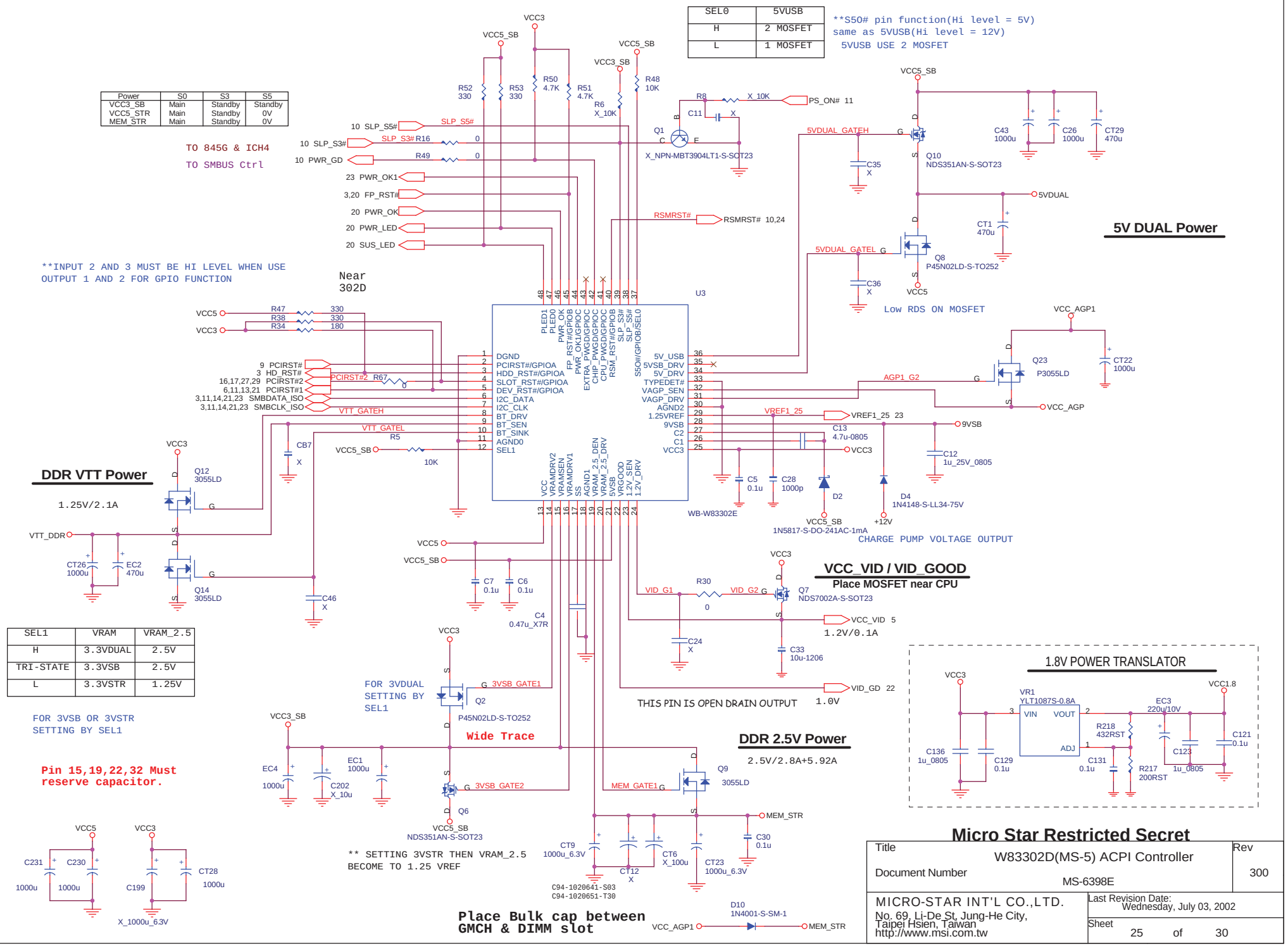
5V DUAL Power
DDR VTT Power
1.25V/2.1A
VCC_VID / VID_GOOD
Place MOSFET near CPU
1.2V/0.1A
1.8V POWER TRANSLATOR
DDR 2.5V Power
2.5V/2.8A+5.92A
Wide Trace
Pin 15,19,22,32 Must reserve capacitor.
Place Bulk cap between GMCH & DIMM slot
Micro Star Restricted Secret
W83302D(MS-5) ACPI Controller
MS-6398E
300
MICRO-STAR INT'L CO.,LTD.
No. 69, Li-De St, Jung-He City, Taipei Hsien, Taiwan
http://www.msi.com.tw
Wednesday, July 03, 2002
25 of 30

DDR Decouping Caps

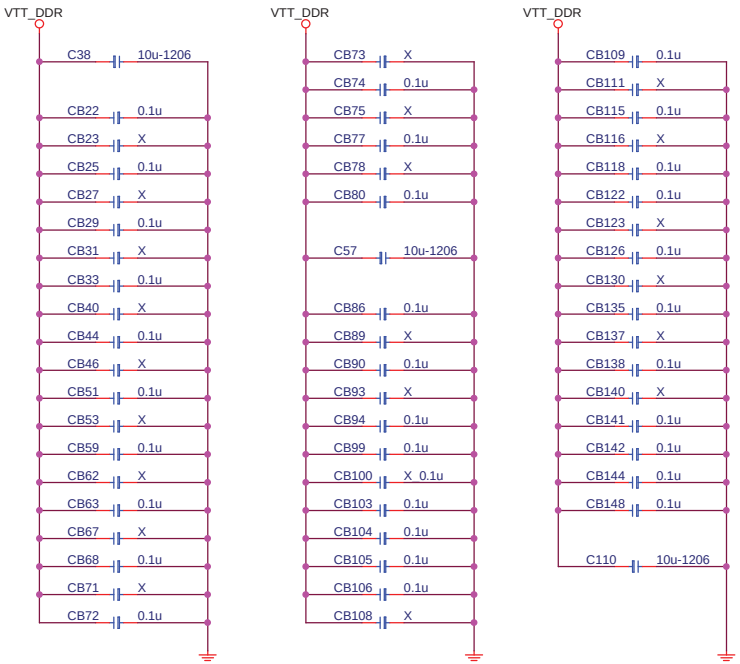

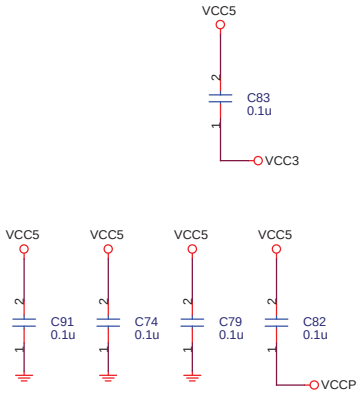

Total 110 signal, need 55 pcs decoupling.

Place for VTT_DDR island

Micro Star Restricted Secret

Title	DDR Bypass CAP	Rev
Document Number	MS-6398E	300
MICRO-STAR INT'L CO.,LTD. No. 69, Li-De St, Jung-He City, Taipei Hsien, Taiwan http://www.msi.com.tw	Last Revision Date: Wednesday, July 03, 2002	
	Sheet 26 of 30	

PCI SLOT 1 (PCI VER: 2.2 COMPLY)

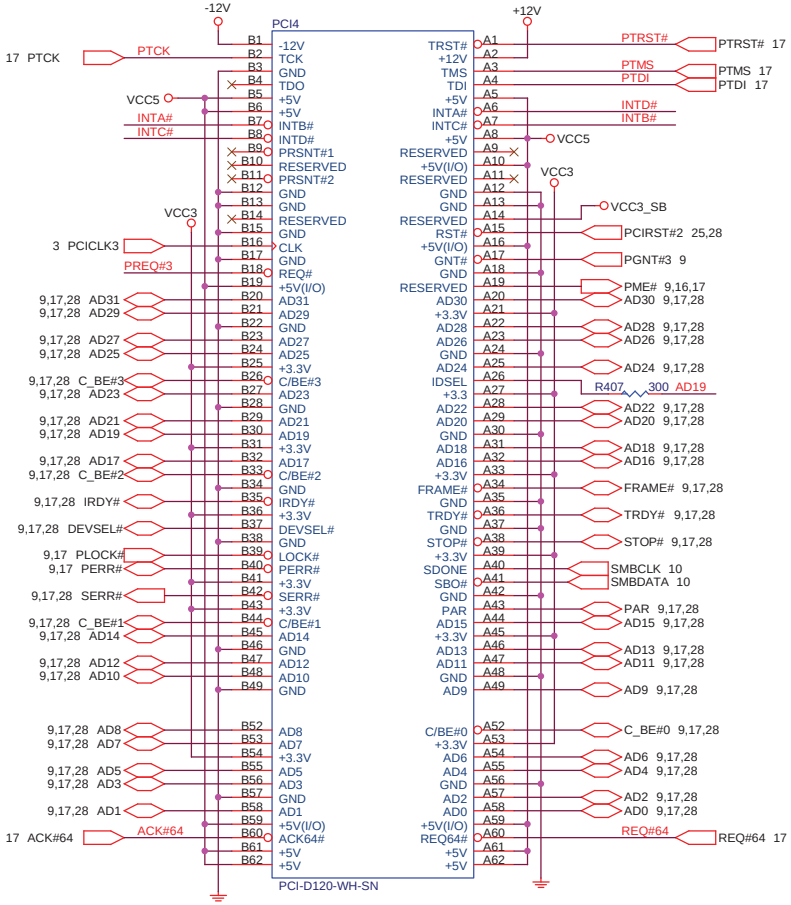

IDSEL = AD19
MASTER = PREQ3
INTD#

PCI SLOT 2 (PCI VER: 2.2 COMPLY)

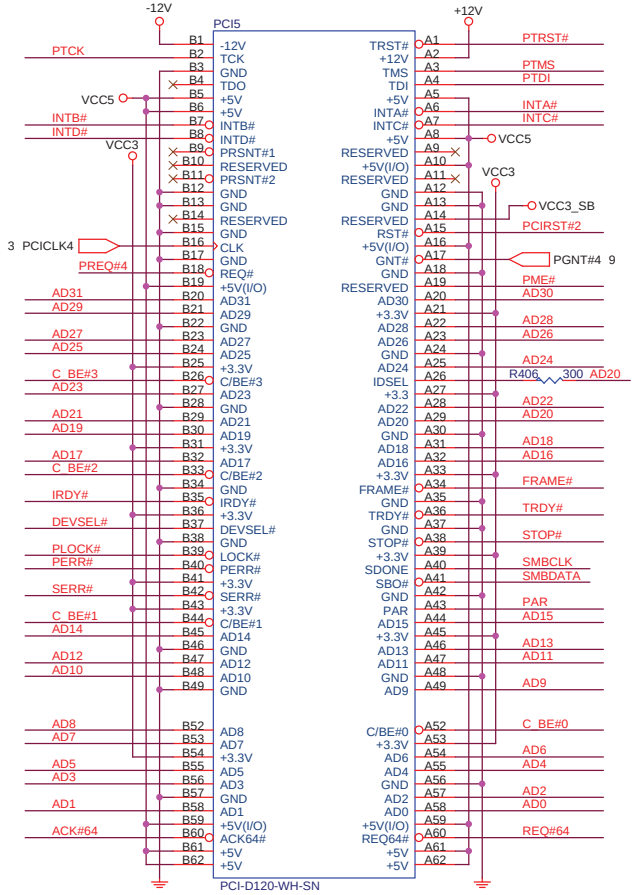

IDSEL = AD20
MASTER = PREQ4
INTA#

PCI PULL-UP / DOWN RESISTORS

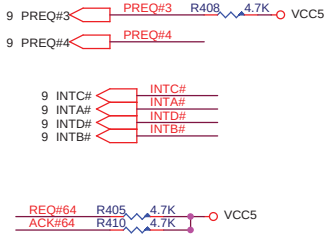

PCI SLOT DECOUPLING CAPACITORS

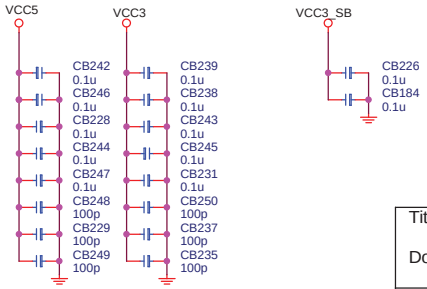

Micro Star Restricted Secret

Title	PCI SLOT 1 & 2 & 3	Rev
Document Number	MS-6398E	300
MICRO-STAR INT'L CO.,LTD. No. 69, Li-De St, Jung-He City, Taipei Hsien, Taiwan http://www.msi.com.tw	Last Revision Date: Wednesday, July 03, 2002	
	Sheet 27 of 30	

PCI To ISA Bridge, Part 1

IDSEL: AD29

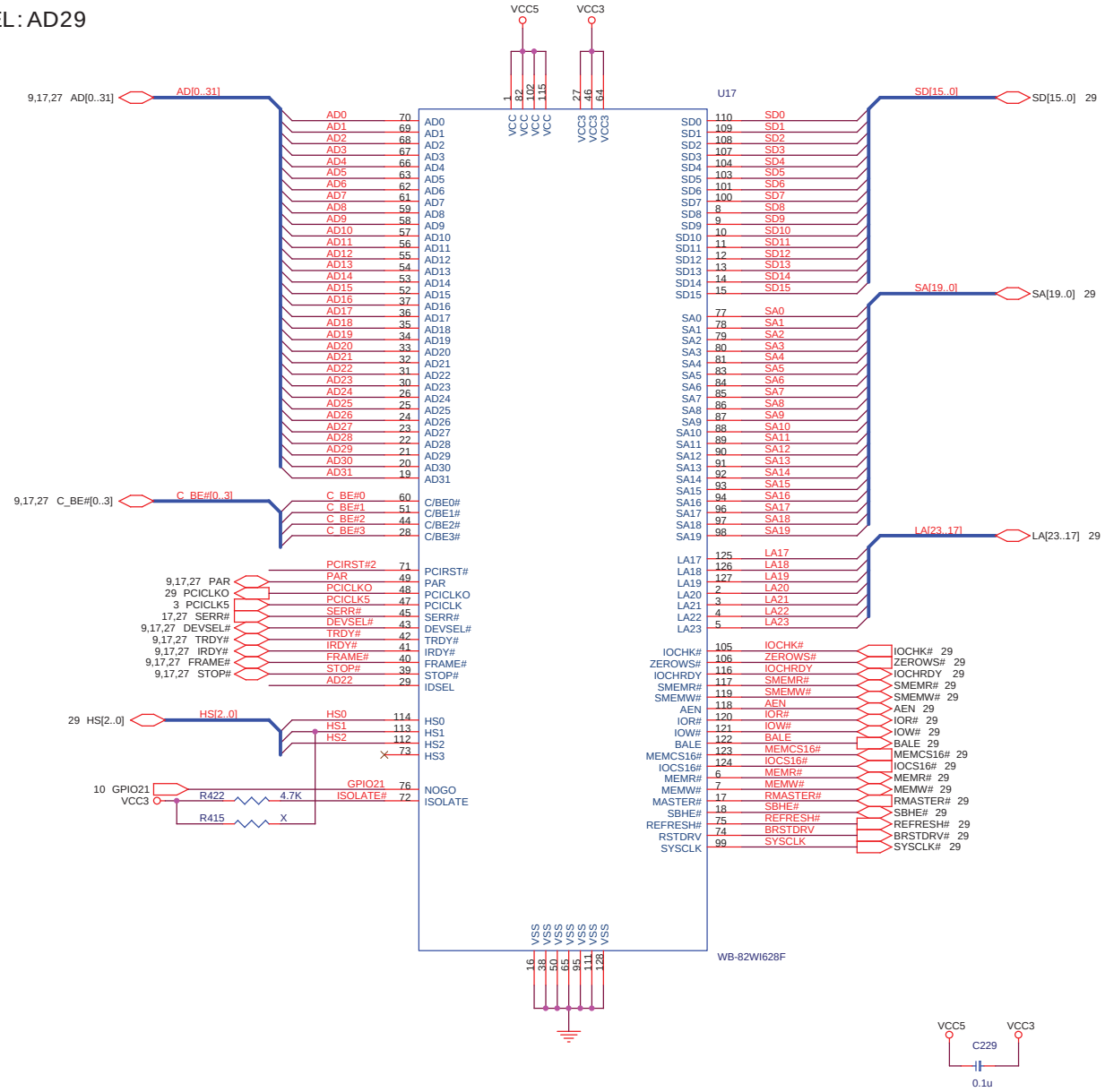

PCI to ISA Bridge Pull Up / Low

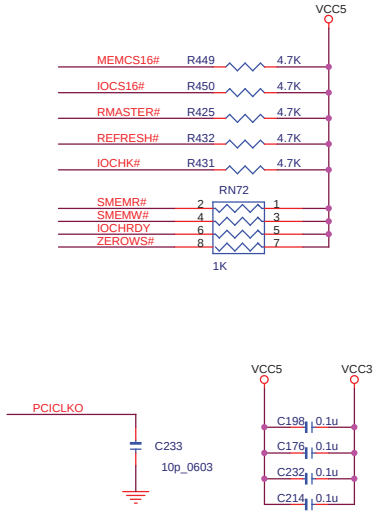

PCI to ISA Bridge Reset

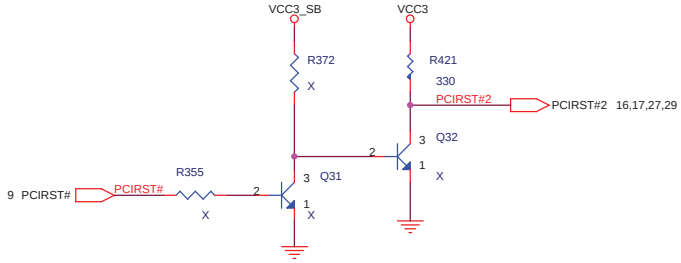

Title	PCI_ISA BRIDGE		
Size Custom	Document Number MS-6398E		Rev 300
Date: Wednesday, July 03, 2002	Sheet 28 of 30		

PCI To ISA Bridge, Part 2

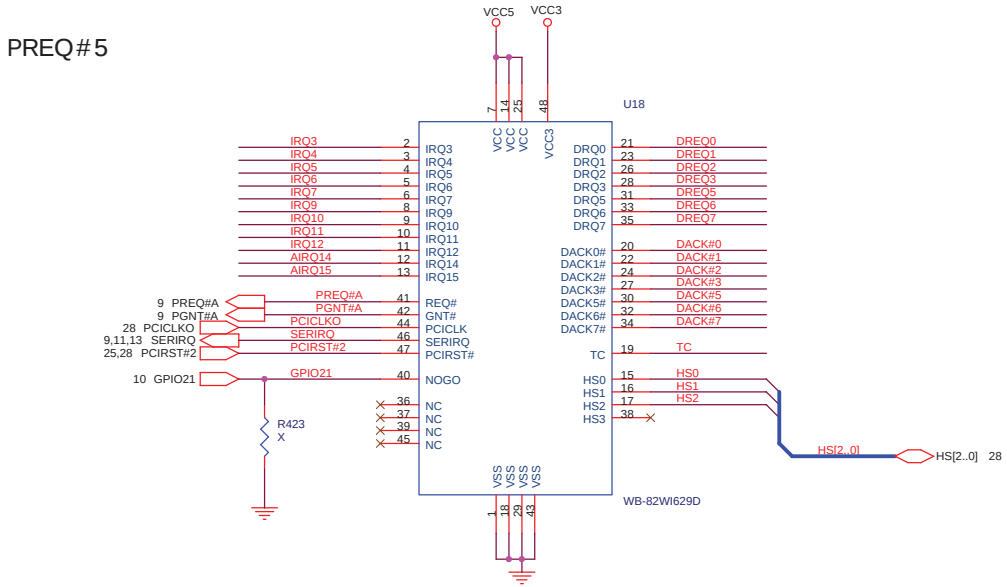

ISA Slot

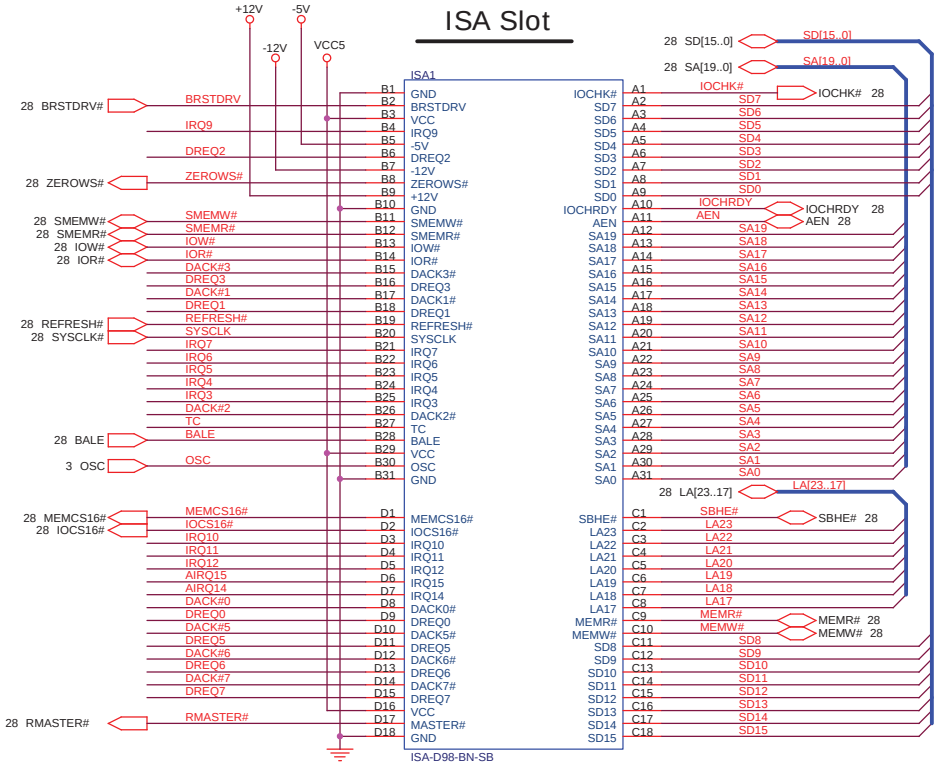

PCI to ISA Bridge Pull Up / Low

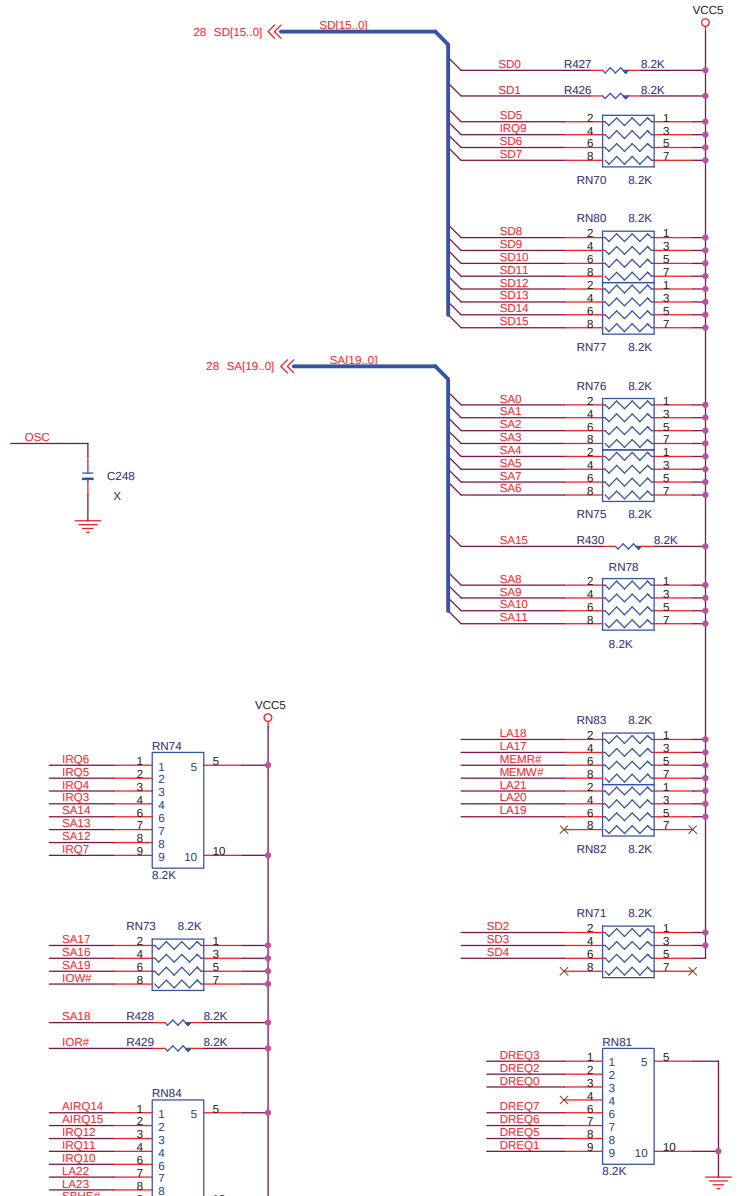

Title	PCI_ISA BRIDGE (2)
Size: Custom	Document Number: MS-6398E
Rev	300
Date: Wednesday, July 03, 2002	Sheet 29 of 30

Pin Header Key Protect
F_AUDIO Pin 8,16 USB1 Pin 4 USB2 Pin 4 USB3 Pin 9 USB4 Pin 9 IR1 Pin 2 COM2 Pin 10

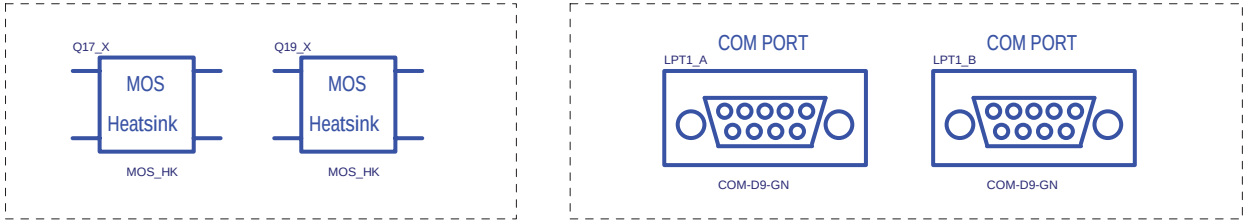

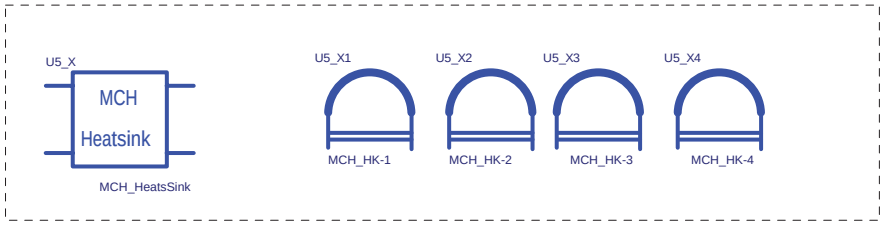

Micro Star Restricted Secret

Title	Manual Parts	Rev
Document Number	MS-6398E	300
MICRO-STAR INT'L CO.,LTD. No. 69, Li-De St, Jung-He City, Taipei Hsien, Taiwan http://www.msi.com.tw	Last Revision Date: Wednesday, July 03, 2002	
	Sheet 30 of 30	

Revision	Date	Page	Drscription
3.0	04/09/2002		PCB Gerber Out on 04/03/2002 Sample BOM (ES BOM -> 6398E-05S) Release on 04/09/2002
	07/02/2002	22	For VID pull-up voltage issue , Change R9 from 330 ohm to 1K ohm , Change RN1 & R2 from 1K ohm to 4.7K ohm .
		10	For ICH4 RTC issue , Change R310 to 5.6M ohm , Add R330=20M ohm , Add R343=5.6M ohm .
			For PWR_GD signal quality , Add pull-down R317=10K ohm .

MICRO-STAR		
Title: Revision History		
Size: Custom	Document Number: MS-6398E	Rev: 300
Date: Wednesday, July 03, 2002	Sheet 31 of 31	