Compal Confidential

Schematics Document

AMD S1/ ATI RS690MC / SB600

2007 / 4 / 10 Rev:0.4

Security Classification	Compal Secret Data		
Issued Date	2007/1/25	Deciphered Date	2008/01/25

THIS SHEET OF ENGINEERING DRAWING IS THE PROPRIETARY PROPERTY OF COMPAL ELECTRONICS, INC. AND CONTAINS CONFIDENTIAL AND TRADE SECRET INFORMATION. THIS SHEET MAY NOT BE TRANSFERED FROM THE CUSTODY OF THE COMPETENT DIVISION OF R&D DEPARTMENT EXCEPT AS AUTHORIZED BY COMPAL ELECTRONICS, INC. NEITHER THIS SHEET NOR THE INFORMATION IT CONTAINS MAY BE USED BY OR DISCLOSED TO ANY THIRD PARTY WITHOUT PRIOR WRITTEN CONSENT OF COMPAL ELECTRONICS, INC.

Title	Cover Sheet	
Size: Custom	Document Number: LA-3611P	Rev: 0.4
Date: Wednesday, April 11, 2007	Sheet 1 of 40	

Compal confidential

Project Code: ANRIBL5000(IBL50)

File Name : LA-3611P

PCB P/N: DA800008C00

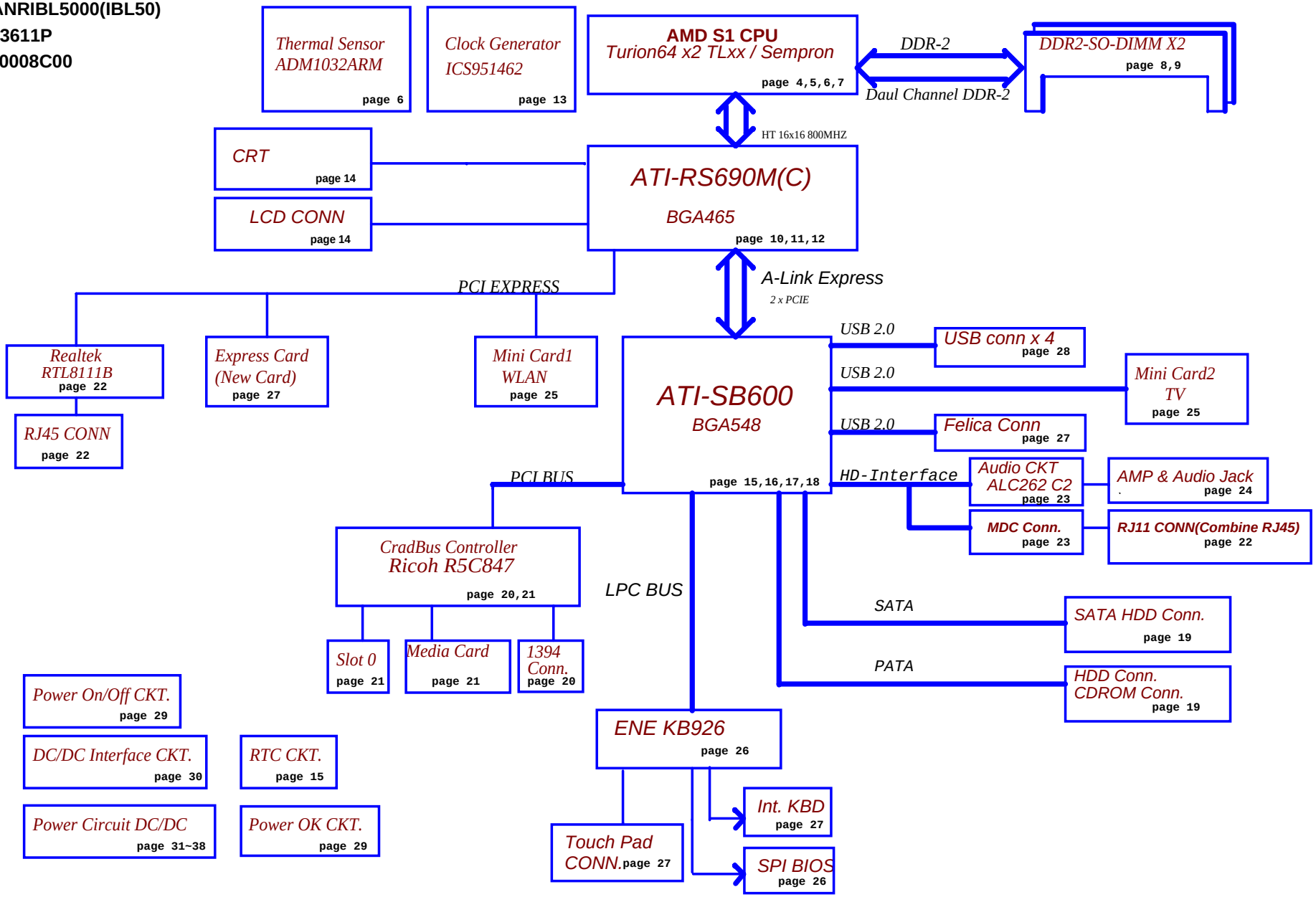

Security Classification	Compal Secret Data		
Issued Date	2007/1/25	Deciphered Date	2008/01/25

THIS SHEET OF ENGINEERING DRAWING IS THE PROPRIETARY PROPERTY OF COMPAL ELECTRONICS, INC. AND CONTAINS CONFIDENTIAL AND TRADE SECRET INFORMATION. THIS SHEET MAY NOT BE TRANSFERED FROM THE CUSTODY OF THE COMPETENT DIVISION OF R&D DEPARTMENT EXCEPT AS AUTHORIZED BY COMPAL ELECTRONICS, INC. NEITHER THIS SHEET NOR THE INFORMATION IT CONTAINS MAY BE USED BY OR DISCLOSED TO ANY THIRD PARTY WITHOUT PRIOR WRITTEN CONSENT OF COMPAL ELECTRONICS, INC.

Title	Block Diagrams		
Size: Custom	Document Number: LA-3611P		Rev: 0.4
Date: Wednesday, April 11, 2007	Sheet 2 of 40		

Voltage Rails

Power Plane	Description	S1	S3	S4/ S5
VIN	Adapter power supply (19V)	ON	ON	ON
B+	AC or battery power rail for power circuit.	ON	ON	ON
+CPU_CORE	Core voltage for CPU	ON	OFF	OFF
+1.2V_HT	1.2V switched power rail	ON	OFF	OFF
+0.9V	0.9V switched power rail for DDR terminator	ON	ON	OFF
+1.2VALW	1.2V always on power rail	ON	ON	ON
+1.5VS	1.5V switched power rail	ON	OFF	OFF
+1.8VS	1.8V switched power rail	ON	OFF	OFF
+1.8V	1.8V power rail for DDR	ON	ON	OFF
+3VALW	3.3V always on power rail	ON	ON	ON
+3V	3.3V power rail	ON	ON	OFF
+3VS	3.3V switched power rail	ON	OFF	OFF
+5VALW	5V always on power rail	ON	ON	ON
+5VS	5V switched power rail	ON	OFF	OFF
+RTCVCC	RTC power	ON	ON	ON

STATE \ SIGNAL	SLP_S1#	SLP_S3#	SLP_S4#	SLP_S5#	+VALW	+V	+VS	Clock
Full ON	HIGH	HIGH	HIGH	HIGH	ON	ON	ON	ON
S1(Power On Suspend)	LOW	HIGH	HIGH	HIGH	ON	ON	ON	LOW
S3 (Suspend to RAM)	LOW	LOW	HIGH	HIGH	ON	ON	OFF	OFF
S4 (Suspend to Disk)	LOW	LOW	LOW	HIGH	ON	OFF	OFF	OFF
S5 (Soft OFF)	LOW	LOW	LOW	LOW	ON	OFF	OFF	OFF

Board ID Table for AD channel

Vcc	3.3V +/- 5%
Ra / Rc	100K +/- 5%

Board ID	Rb / Rd	V_{AD_BID} min	V_{AD_BID} typ	V_{AD_BID} max
0	0	0 V	0 V	0 V
1	8.2K +/- 5%	0.216 V	0.250 V	0.289 V
2	18K +/- 5%	0.436 V	0.503 V	0.538 V
3	33K +/- 5%	0.712 V	0.819 V	0.875 V
4	56K +/- 5%	1.036 V	1.185 V	1.264 V
5	100K +/- 5%	1.453 V	1.650 V	1.759 V
6	200K +/- 5%	1.935 V	2.200 V	2.341 V
7	NC	2.500 V	3.300 V	3.300 V

External PCI Devices

Device	IDSEL#	REQ#/GNT#	Interrupts
CardBus	AD21	0	PIRQE/PIRQF/PIRQG

BOARD ID Table

Board ID	PCB Revision
0	0.2 (KH4 ES1)
1	0.3 (KH4 ES2)
2	0.4 (KH4 PP)
3	
4	
5	
6	
7	

BTO Option Table

BTO Item	BOM Structure

EC SM Bus1 address

Device	Address
Smart Battery	0001 011X b?
EEPROM(24C16/02)	1010 000X b?
(24C04)	1011 000Xb?

EC SM Bus2 address

Device	Address
ADM1032	1001 110X b?

SB600 SM Bus address

Device	Address
Clock Generator (ICS 951462AGT)	1101 001Xb?
DDRII DIMM0	1001 000Xb?
DDRII DIMM2	1001 010Xb?

THIS SHEET OF ENGINEERING DRAWING IS THE PROPRIETARY PROPERTY OF COMPAL ELECTRONICS, INC. AND CONTAINS CONFIDENTIAL AND TRADE SECRET INFORMATION. THIS SHEET MAY NOT BE TRANSFERED FROM THE CUSTODY OF THE COMPETENT DIVISION OF R&D DEPARTMENT EXCEPT AS AUTHORIZED BY COMPAL ELECTRONICS, INC. NEITHER THIS SHEET NOR THE INFORMATION IT CONTAINS MAY BE USED BY OR DISCLOSED TO ANY THIRD PARTY WITHOUT PRIOR WRITTEN CONSENT OF COMPAL ELECTRONICS, INC.

Security Classification	Compal Secret Data		
Issued Date	2007/1/25	Deciphered Date	2008/01/25

Title: Notes

Size: Custom | Document Number: LA-3611P | Rev: 0.4

Date: Wednesday, April 11, 2007 | Sheet 3 of 40

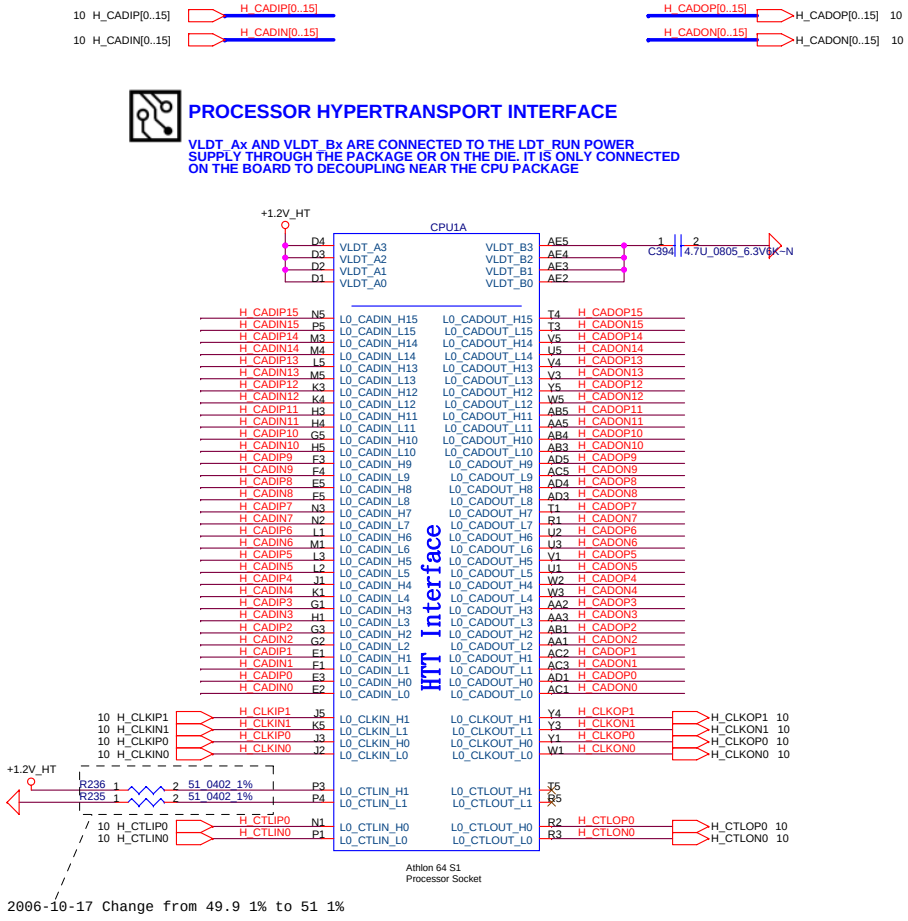

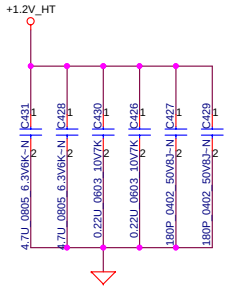

FAN1 Control and Tachometer

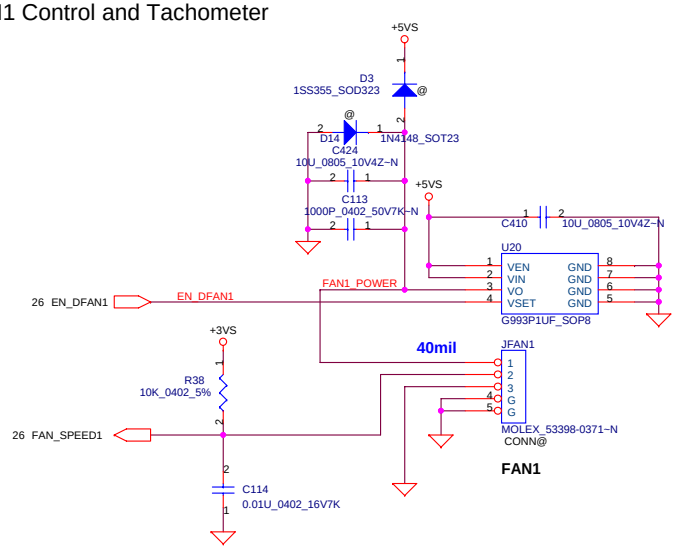

Security Classification	Compal Secret Data		
Issued Date	2007/1/25	Deciphered Date	2008/01/25

THIS SHEET OF ENGINEERING DRAWING IS THE PROPRIETARY PROPERTY OF COMPAL ELECTRONICS, INC. AND CONTAINS CONFIDENTIAL AND TRADE SECRET INFORMATION. THIS SHEET MAY NOT BE TRANSFERED FROM THE CUSTODY OF THE COMPETENT DIVISION OF R&D DEPARTMENT EXCEPT AS AUTHORIZED BY COMPAL ELECTRONICS, INC. NEITHER THIS SHEET NOR THE INFORMATION IT CONTAINS MAY BE USED BY OR DISCLOSED TO ANY THIRD PARTY WITHOUT PRIOR WRITTEN CONSENT OF COMPAL ELECTRONICS, INC.

Compal Electronics, Inc.

Title: **TURION64 HT I/F & FAN**

Size: Custom | Document Number: LA-3611P | Rev: 0.4

Date: Wednesday, April 11, 2007 | Sheet 4 of 40

Processor DDR2 Memory Interface

VDD_VTT_SUS_CPU IS CONNECTED TO THE VDD_VTT_SUS POWER SUPPLY THROUGH THE PACKAGE OR ON THE DIE. IT IS ONLY CONNECTED ON THE BOARD TO DECOUPLING NEAR THE CPU PACKAGE

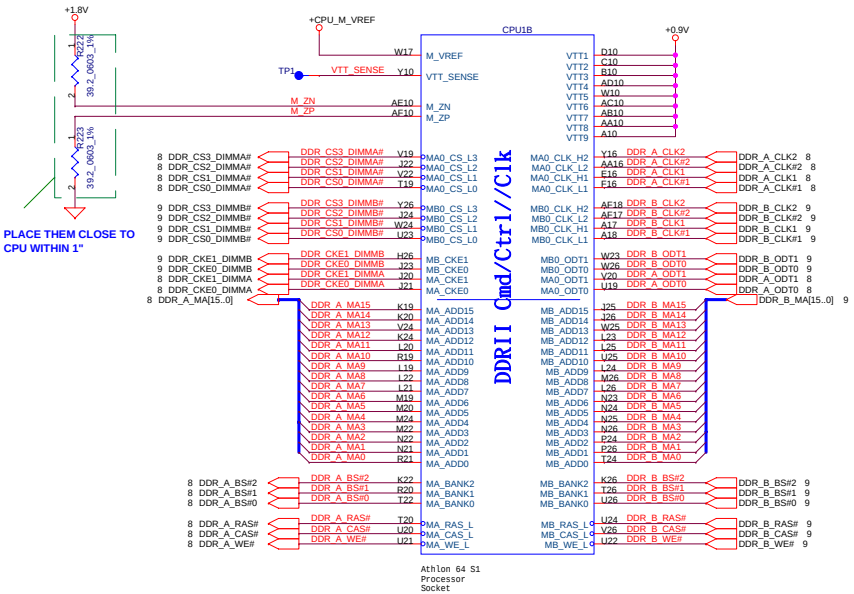

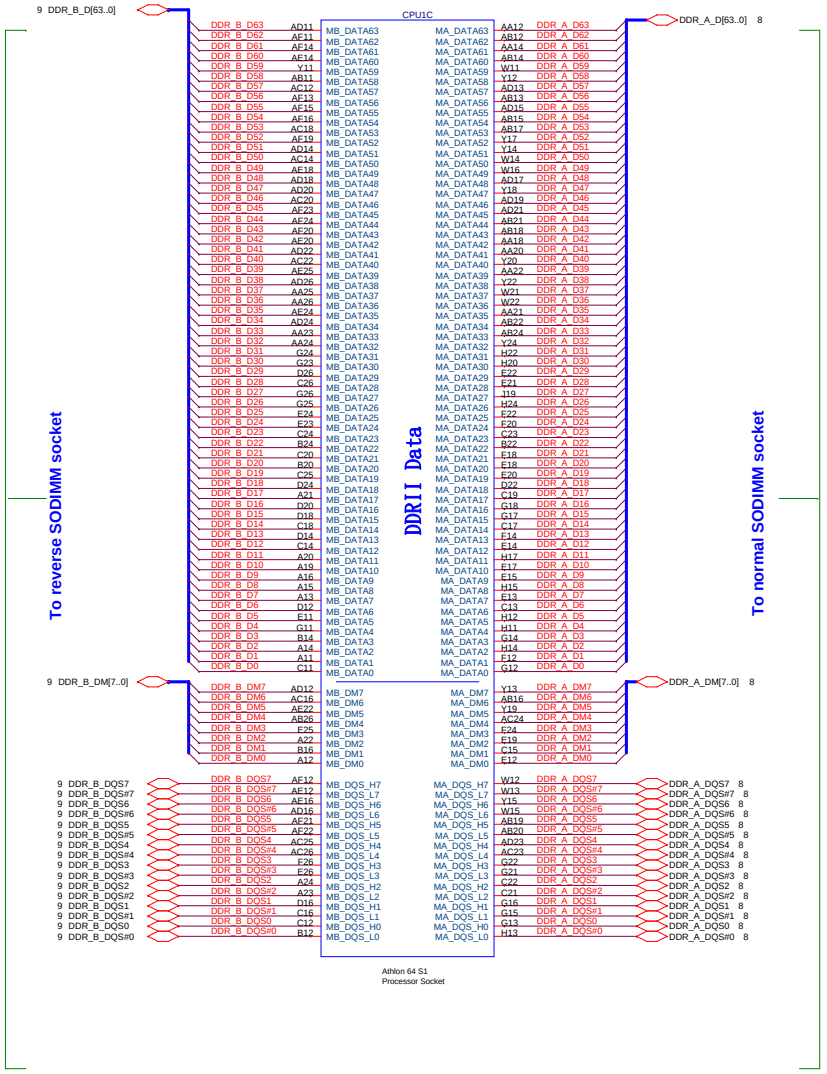

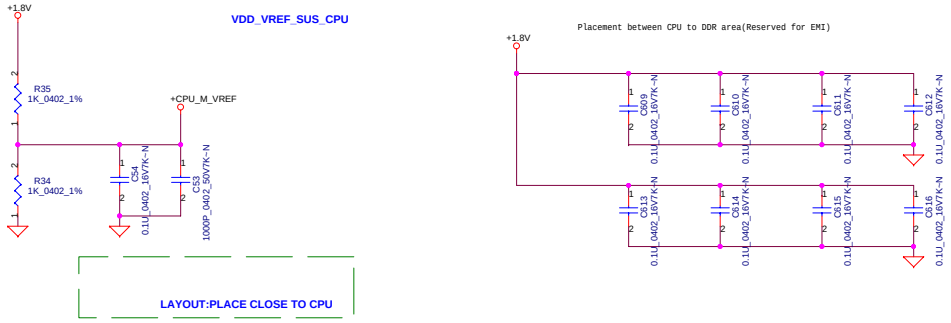

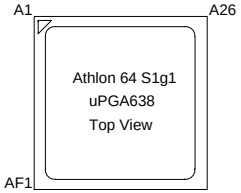

Security Classification	Compal Secret Data		
Issued Date	2007/1/25	Deciphered Date	2008/01/25

THIS SHEET OF ENGINEERING DRAWING IS THE PROPRIETARY PROPERTY OF COMPAL ELECTRONICS, INC. AND CONTAINS CONFIDENTIAL AND TRADE SECRET INFORMATION. THIS SHEET MAY NOT BE TRANSFERED FROM THE CUSTODY OF THE COMPETENT DIVISION OF R&D DEPARTMENT EXCEPT AS AUTHORIZED BY COMPAL ELECTRONICS, INC. NEITHER THIS SHEET NOR THE INFORMATION IT CONTAINS MAY BE USED BY OR DISCLOSED TO ANY THIRD PARTY WITHOUT PRIOR WRITTEN CONSENT OF COMPAL ELECTRONICS, INC.

Title	TURION64 DDRII MEMORY I/F		
Size: Custom	Document Number: LA-3611P		Rev: 0.4
Date: Wednesday, April 11, 2007	Sheet 5 of 40		

ATHLON Control and Debug

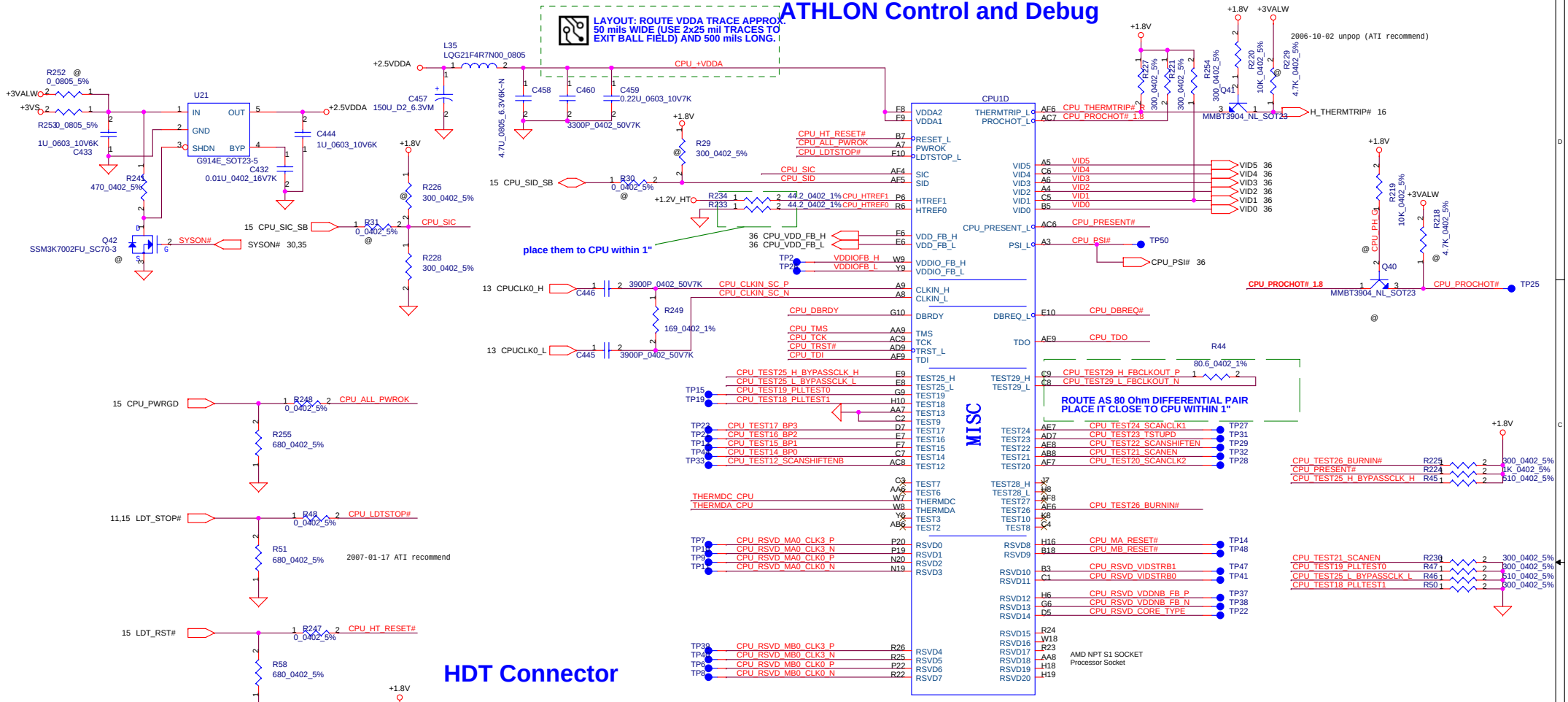

HDT Connector

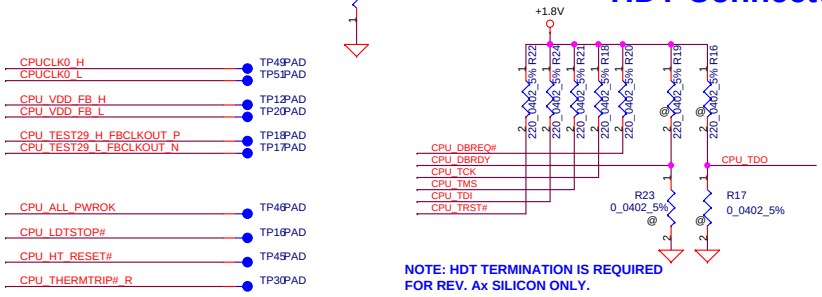

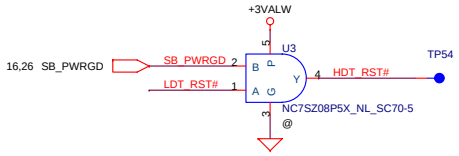

Thermal Sensor ADM1032

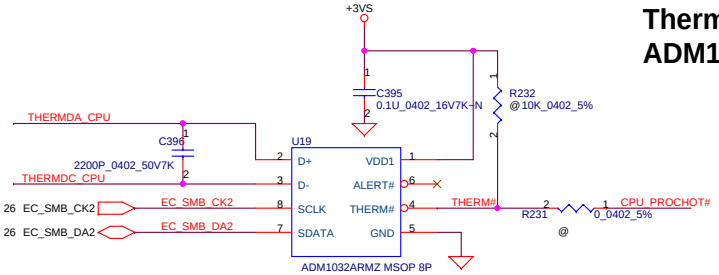

SMBus Address: 1001110X (b)

Security Classification	Compal Secret Data		
Issued Date	2007/1/25	Deciphered Date	2008/01/25

THIS SHEET OF ENGINEERING DRAWING IS THE PROPRIETARY PROPERTY OF COMPAL ELECTRONICS, INC. AND CONTAINS CONFIDENTIAL AND TRADE SECRET INFORMATION. THIS SHEET MAY NOT BE TRANSFERRED FROM THE CUSTODY OF THE COMPETENT DIVISION OF R&D DEPARTMENT EXCEPT AS AUTHORIZED BY COMPAL ELECTRONICS, INC. NEITHER THIS SHEET NOR THE INFORMATION IT CONTAINS MAY BE USED BY OR DISCLOSED TO ANY THIRD PARTY WITHOUT PRIOR WRITTEN CONSENT OF COMPAL ELECTRONICS, INC.

Compal Electronics, Inc.

Title: **TURION64 CTRL & ADM1032**

Size: Custom | Document Number: LA-3611P | Rev: 0.4

Date: Wednesday, April 11, 2007 | Sheet 6 of 40

BOTTOMSIDE DECOUPLING

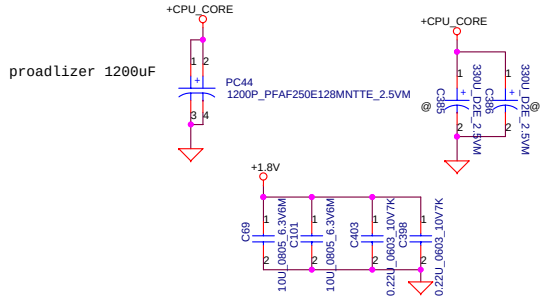

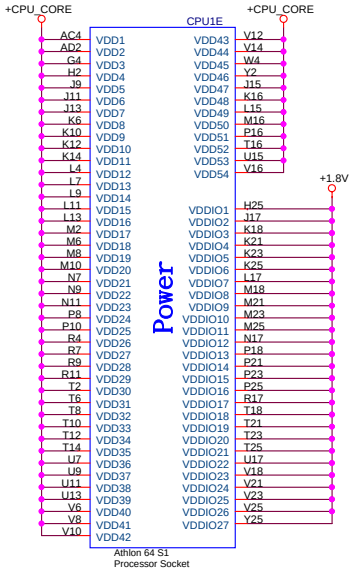

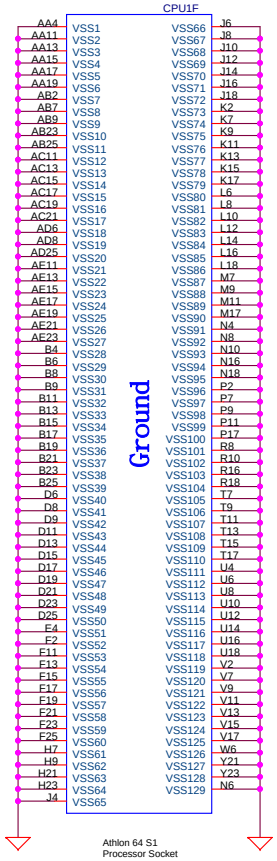

PLACE CLOSE TO SO-DIMM1 AS POSSIBLE

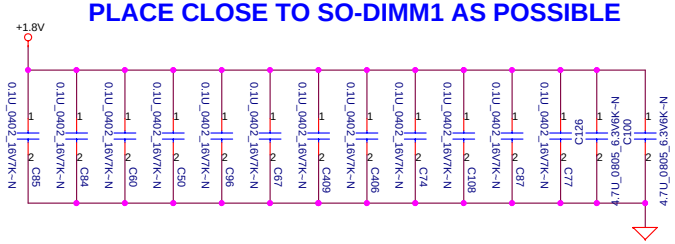

PLACE CLOSE TO SO-DIMM2 AS POSSIBLE

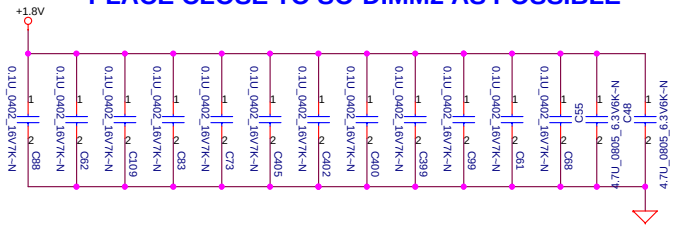

DECOUPLING BETWEEN PROCESSOR AND DIMMs
PLACE CLOSE TO PROCESSOR AS POSSIBLE

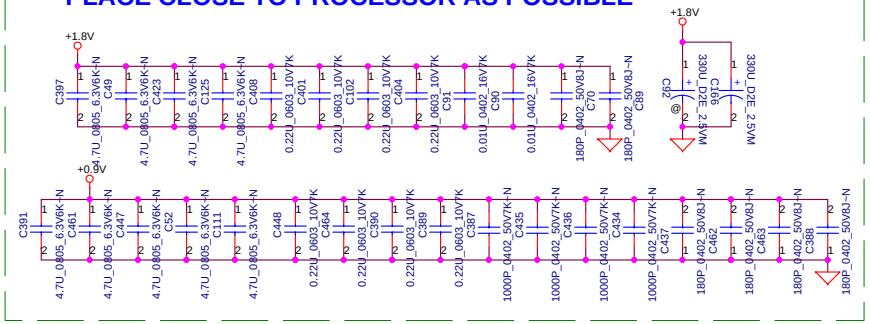

Security Classification	Compal Secret Data		
Issued Date	2007/1/25	Deciphered Date	2008/01/25

THIS SHEET OF ENGINEERING DRAWING IS THE PROPRIETARY PROPERTY OF COMPAL ELECTRONICS, INC. AND CONTAINS CONFIDENTIAL AND TRADE SECRET INFORMATION. THIS SHEET MAY NOT BE TRANSFERED FROM THE CUSTODY OF THE COMPETENT DIVISION OF R&D DEPARTMENT EXCEPT AS AUTHORIZED BY COMPAL ELECTRONICS, INC. NEITHER THIS SHEET NOR THE INFORMATION IT CONTAINS MAY BE USED BY OR DISCLOSED TO ANY THIRD PARTY WITHOUT PRIOR WRITTEN CONSENT OF COMPAL ELECTRONICS, INC.

Compal Electronics, Inc.

Title: **TURION64 PWR & GND**

Size: Custom | Document Number: **LA-3611P** | Rev: 0.4

Date: Wednesday, April 11, 2007 | Sheet 7 of 40

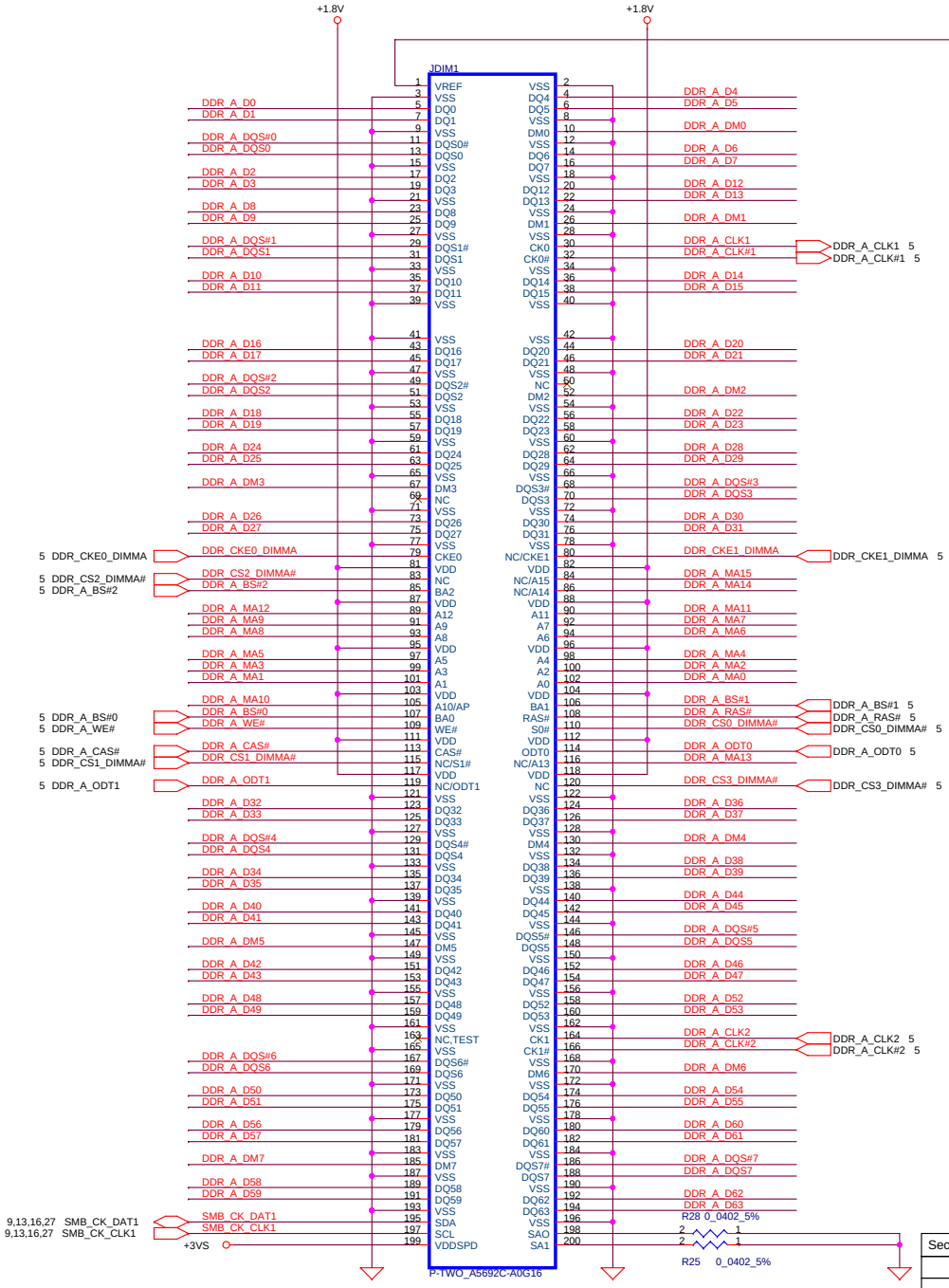

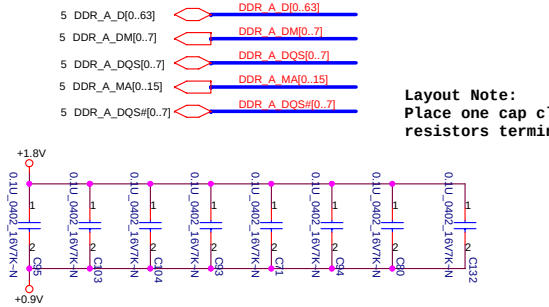

Layout Note:
Place one cap close to every 2 pullup resistors terminated to +0.9V

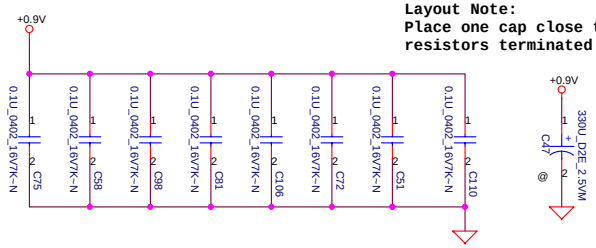

Layout Note:
Place one cap close to every 2 pullup resistors terminated to +0.9V

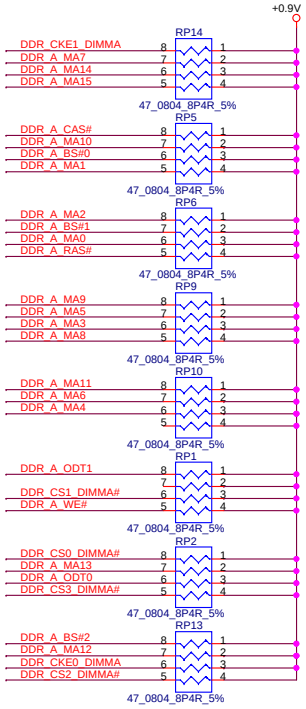

Security Classification	Compal Secret Data		
Issued Date	2007/1/25	Deciphered Date	2008/01/25

THIS SHEET OF ENGINEERING DRAWING IS THE PROPRIETARY PROPERTY OF COMPAL ELECTRONICS, INC. AND CONTAINS CONFIDENTIAL AND TRADE SECRET INFORMATION. THIS SHEET MAY NOT BE TRANSFERED FROM THE CUSTODY OF THE COMPETENT DIVISION OF R&D DEPARTMENT EXCEPT AS AUTHORIZED BY COMPAL ELECTRONICS, INC. NEITHER THIS SHEET NOR THE INFORMATION IT CONTAINS MAY BE USED BY OR DISCLOSED TO ANY THIRD PARTY WITHOUT PRIOR WRITTEN CONSENT OF COMPAL ELECTRONICS, INC.

Title: DDR2 SODIMM-I Socket

Size: Custom | Document Number: LA-3611P | Rev: 0.4

Date: Wednesday, April 11, 2007 | Sheet 8 of 40

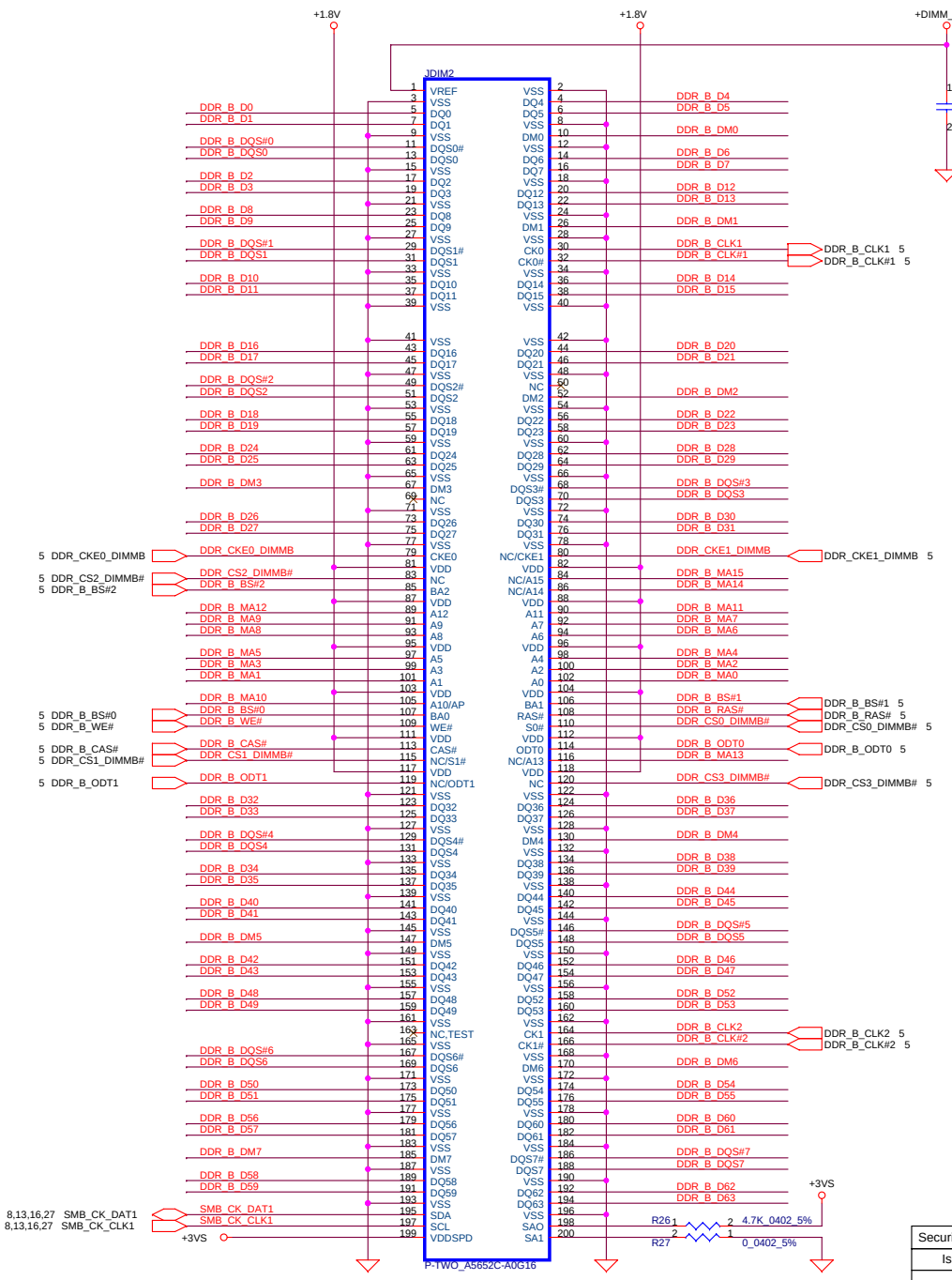

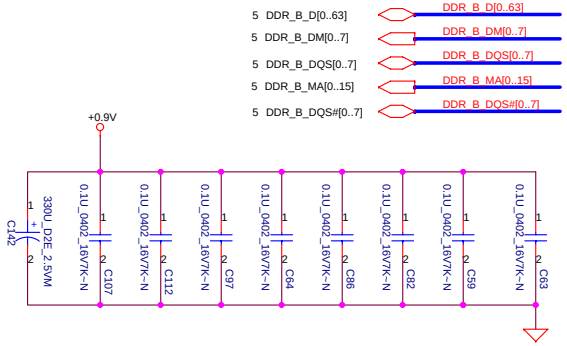

Layout Note:
Place one cap close to every 2 pullup resistors terminated to +0.9V

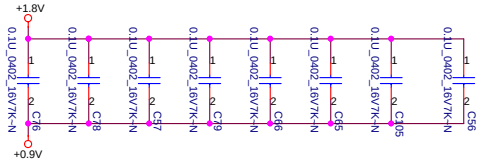

Layout Note:
Place one cap close to every 2 pullup resistors terminated to +0.9V

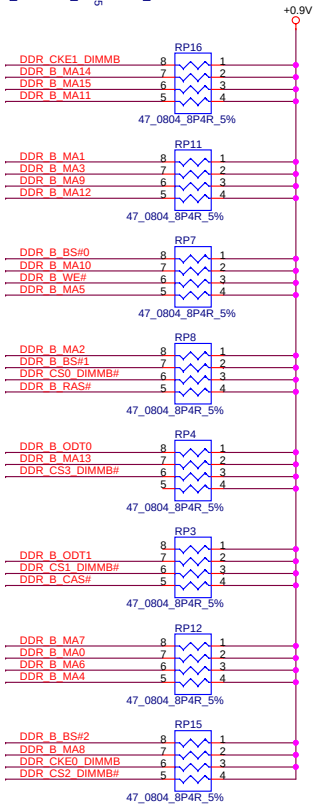

Security Classification	Compal Secret Data		
Issued Date	2007/1/25	Deciphered Date	2008/01/25

THIS SHEET OF ENGINEERING DRAWING IS THE PROPRIETARY PROPERTY OF COMPAL ELECTRONICS, INC. AND CONTAINS CONFIDENTIAL AND TRADE SECRET INFORMATION. THIS SHEET MAY NOT BE TRANSFERED FROM THE CUSTODY OF THE COMPETENT DIVISION OF R&D DEPARTMENT EXCEPT AS AUTHORIZED BY COMPAL ELECTRONICS, INC. NEITHER THIS SHEET NOR THE INFORMATION IT CONTAINS MAY BE USED BY OR DISCLOSED TO ANY THIRD PARTY WITHOUT PRIOR WRITTEN CONSENT OF COMPAL ELECTRONICS, INC.

Title: DDR2 SODIMM-II Socket

Size: Custom | Document Number: LA-3611P | Rev: 0.4

Date: Wednesday, April 11, 2007 | Sheet 9 of 40

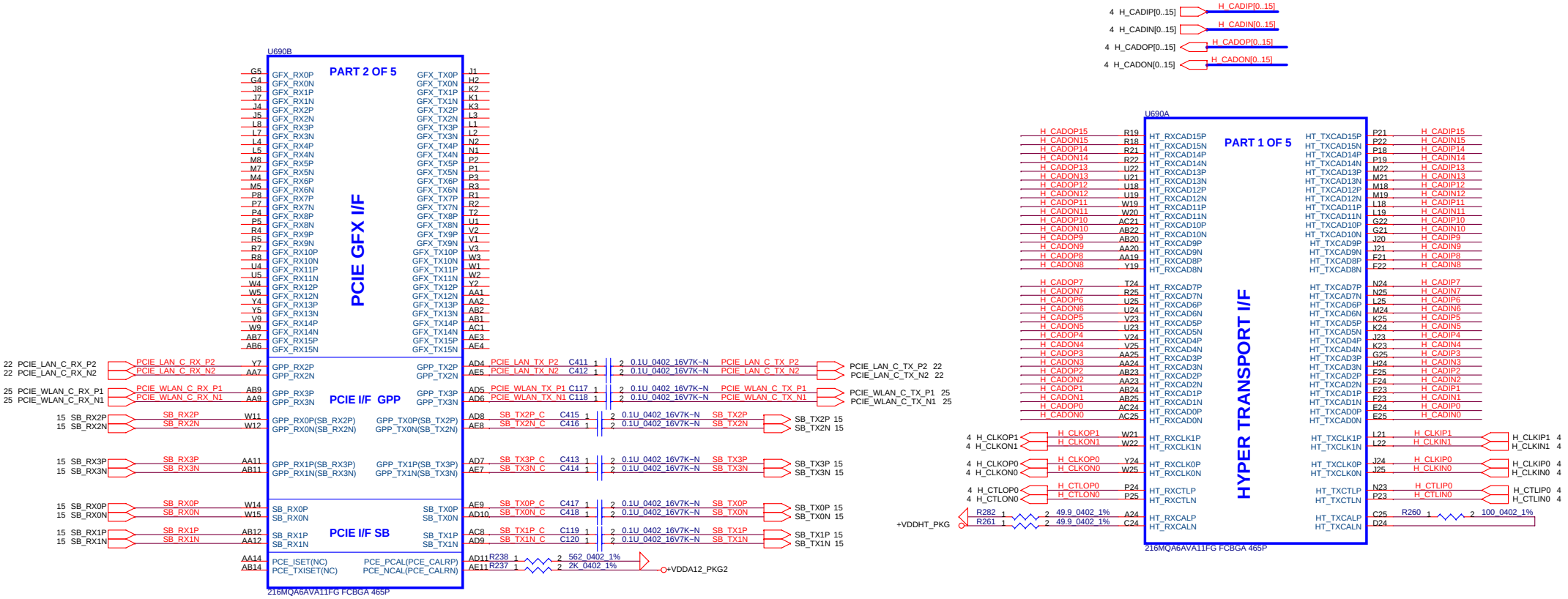

Security Classification	Compal Secret Data		
Issued Date	2007/1/25	Deciphered Date	2008/01/25

THIS SHEET OF ENGINEERING DRAWING IS THE PROPRIETARY PROPERTY OF COMPAL ELECTRONICS, INC. AND CONTAINS CONFIDENTIAL AND TRADE SECRET INFORMATION. THIS SHEET MAY NOT BE TRANSFERED FROM THE CUSTODY OF THE COMPETENT DIVISION OF R&D DEPARTMENT EXCEPT AS AUTHORIZED BY COMPAL ELECTRONICS, INC. NEITHER THIS SHEET NOR THE INFORMATION IT CONTAINS MAY BE USED BY OR DISCLOSED TO ANY THIRD PARTY WITHOUT PRIOR WRITTEN CONSENT OF COMPAL ELECTRONICS, INC.

Title: **RS690MC HT / PCIE / DVI**

Size	Document Number	Rev
Custom	LA-3611P	0.4

Date: Wednesday, April 11, 2007 Sheet 10 of 40

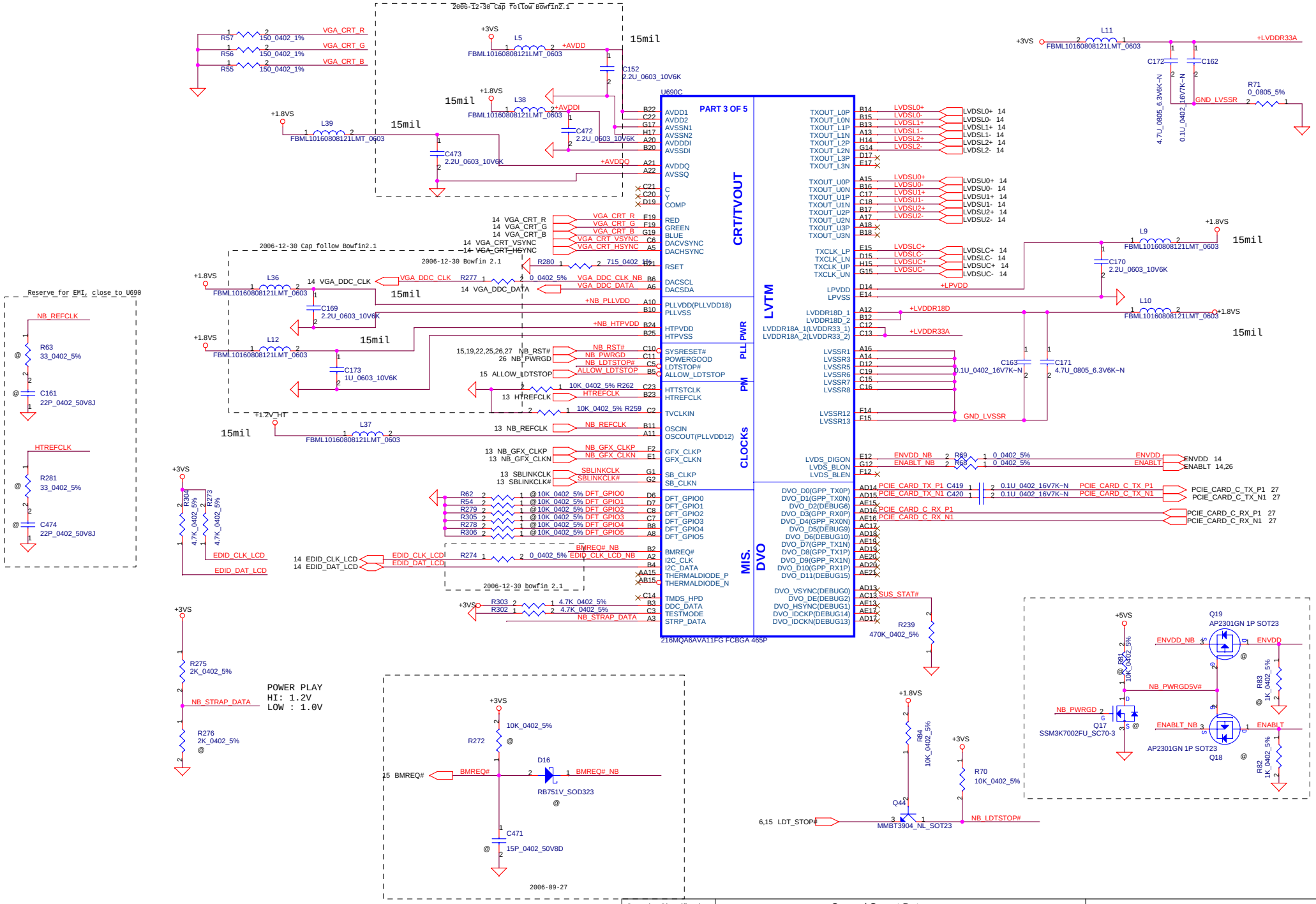

Security Classification	Compal Secret Data		
Issued Date	2007/1/25	Deciphered Date	2008/01/25

THIS SHEET OF ENGINEERING DRAWING IS THE PROPRIETARY PROPERTY OF COMPAL ELECTRONICS, INC. AND CONTAINS CONFIDENTIAL AND TRADE SECRET INFORMATION. THIS SHEET MAY NOT BE TRANSFERED FROM THE CUSTODY OF THE COMPETENT DIVISION OF R&D DEPARTMENT EXCEPT AS AUTHORIZED BY COMPAL ELECTRONICS, INC. NEITHER THIS SHEET NOR THE INFORMATION IT CONTAINS MAY BE USED BY OR DISCLOSED TO ANY THIRD PARTY WITHOUT PRIOR WRITTEN CONSENT OF COMPAL ELECTRONICS, INC.

Title: RS690MC VIDEO_IF/CLOCK GEN

Size: Custom | Document Number: LA-3611P | Rev: 0.4

Date: Wednesday, April 11, 2007 | Sheet 11 of 40

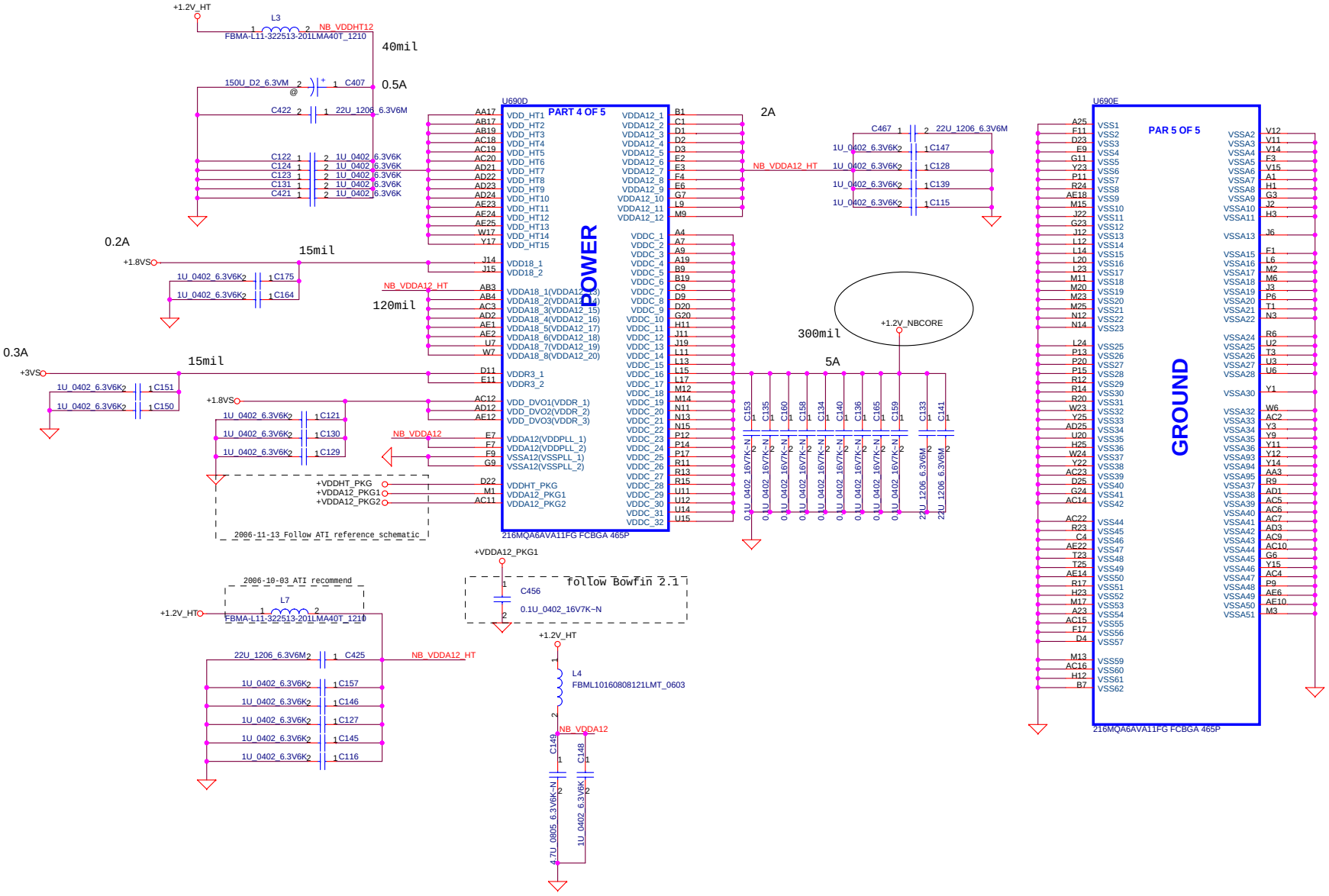

Security Classification	Compal Secret Data		
Issued Date	2007/1/25	Deciphered Date	2008/01/25

THIS SHEET OF ENGINEERING DRAWING IS THE PROPRIETARY PROPERTY OF COMPAL ELECTRONICS, INC. AND CONTAINS CONFIDENTIAL AND TRADE SECRET INFORMATION. THIS SHEET MAY NOT BE TRANSFERRED FROM THE CUSTODY OF THE COMPETENT DIVISION OF R&D DEPARTMENT EXCEPT AS AUTHORIZED BY COMPAL ELECTRONICS, INC. NEITHER THIS SHEET NOR THE INFORMATION IT CONTAINS MAY BE USED BY OR DISCLOSED TO ANY THIRD PARTY WITHOUT PRIOR WRITTEN CONSENT OF COMPAL ELECTRONICS, INC.

Title: **RS690MC Power/GND**

Size: Custom | Document Number: **LA-3611P** | Rev: 0.4

Date: Wednesday, April 11, 2007 | Sheet 12 of 40

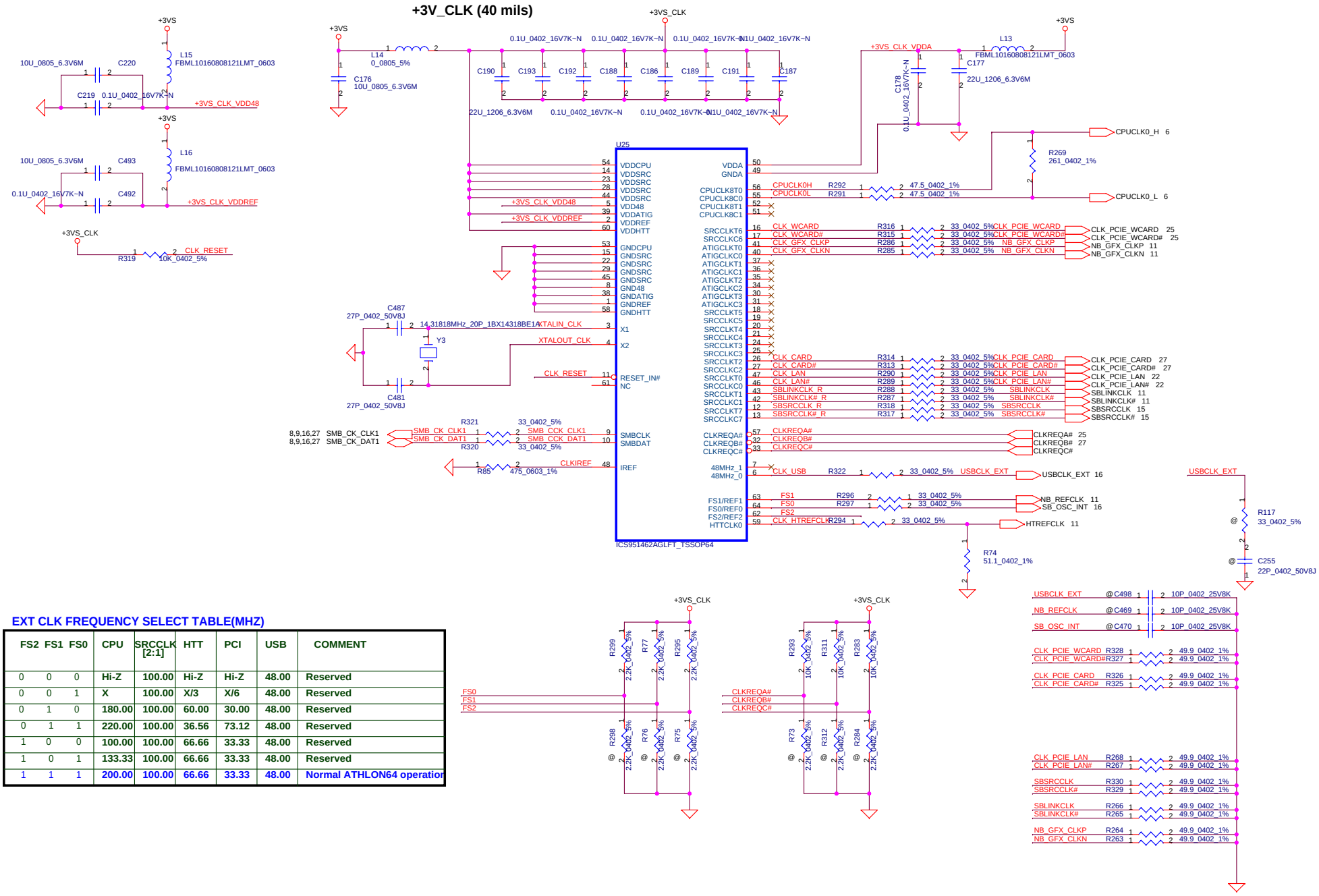

EXT CLK FREQUENCY SELECT TABLE(MHZ)

FS2	FS1	FS0	CPU	SRCCLK [2:1]	HTT	PCI	USB	COMMENT
0	0	0	Hi-Z	100.00	Hi-Z	Hi-Z	48.00	Reserved
0	0	1	X	100.00	X/3	X/6	48.00	Reserved
0	1	0	180.00	100.00	60.00	30.00	48.00	Reserved
0	1	1	220.00	100.00	36.56	73.12	48.00	Reserved
1	0	0	100.00	100.00	66.66	33.33	48.00	Reserved
1	0	1	133.33	100.00	66.66	33.33	48.00	Reserved
1	1	1	200.00	100.00	66.66	33.33	48.00	Normal ATHLON64 operation

Security Classification	Compal Secret Data		
Issued Date	2007/1/25	Deciphered Date	2008/01/25

THIS SHEET OF ENGINEERING DRAWING IS THE PROPRIETARY PROPERTY OF COMPAL ELECTRONICS, INC. AND CONTAINS CONFIDENTIAL AND TRADE SECRET INFORMATION. THIS SHEET MAY NOT BE TRANSFERED FROM THE CUSTODY OF THE COMPETENT DIVISION OF R&D DEPARTMENT EXCEPT AS AUTHORIZED BY COMPAL ELECTRONICS, INC. NEITHER THIS SHEET NOR THE INFORMATION IT CONTAINS MAY BE USED BY OR DISCLOSED TO ANY THIRD PARTY WITHOUT PRIOR WRITTEN CONSENT OF COMPAL ELECTRONICS, INC.

Title: **Clock Generator**

Size: Custom | Document Number: **LA-3611P** | Rev: 0.4

Date: Wednesday, April 11, 2007 | Sheet 13 of 40

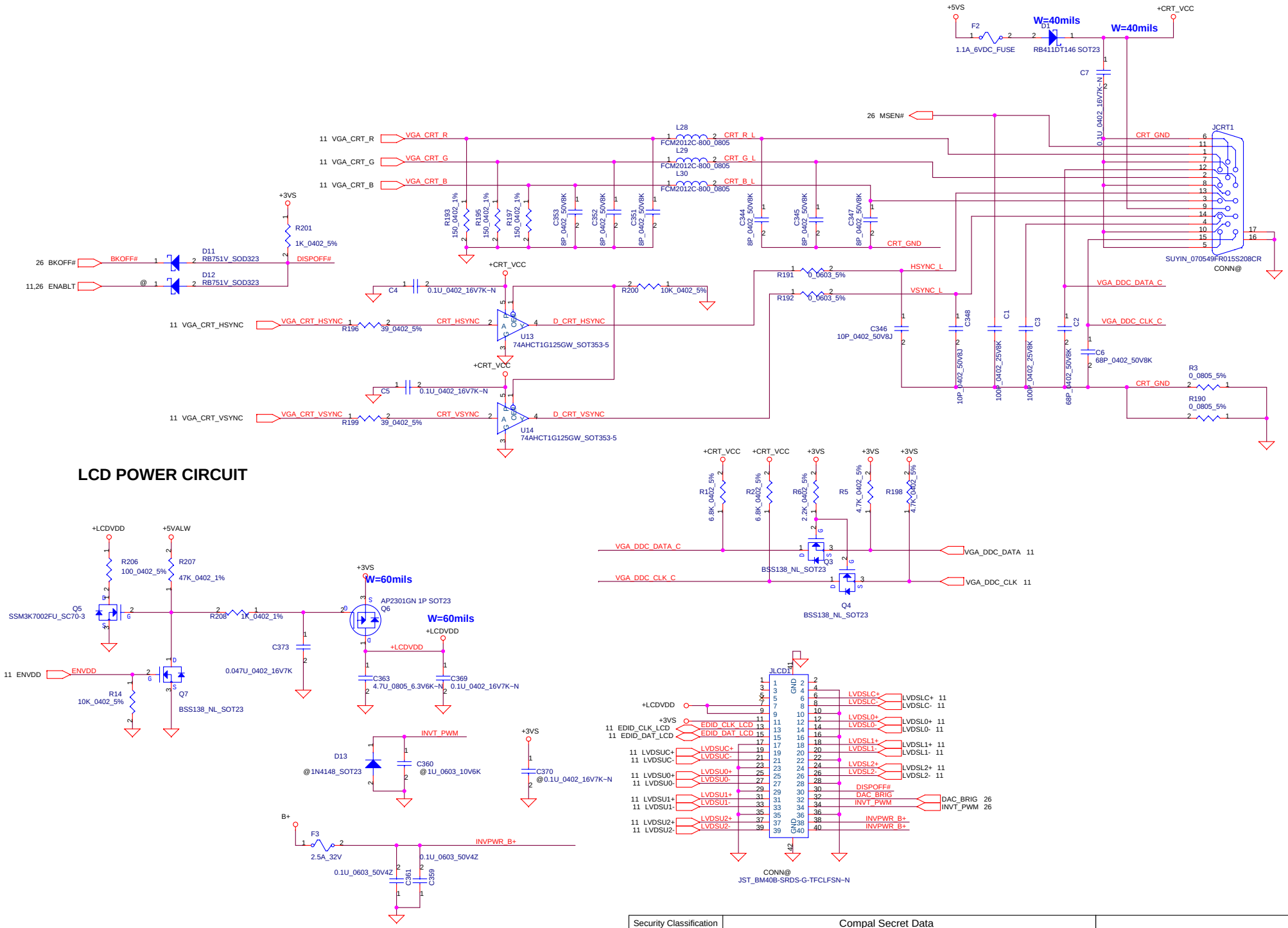

Security Classification	Compal Secret Data		
Issued Date	2007/1/25	Deciphered Date	2008/01/25

THIS SHEET OF ENGINEERING DRAWING IS THE PROPRIETARY PROPERTY OF COMPAL ELECTRONICS, INC. AND CONTAINS CONFIDENTIAL AND TRADE SECRET INFORMATION. THIS SHEET MAY NOT BE TRANSFERED FROM THE CUSTODY OF THE COMPETENT DIVISION OF R&D DEPARTMENT EXCEPT AS AUTHORIZED BY COMPAL ELECTRONICS, INC. NEITHER THIS SHEET NOR THE INFORMATION IT CONTAINS MAY BE USED BY OR DISCLOSED TO ANY THIRD PARTY WITHOUT PRIOR WRITTEN CONSENT OF COMPAL ELECTRONICS, INC.

Title: **CRT Conn.& LCD Conn.**

Size: Custom | Document Number: **LA-3611P** | Rev: 0.4

Date: Wednesday, April 11, 2007 | Sheet 14 of 40

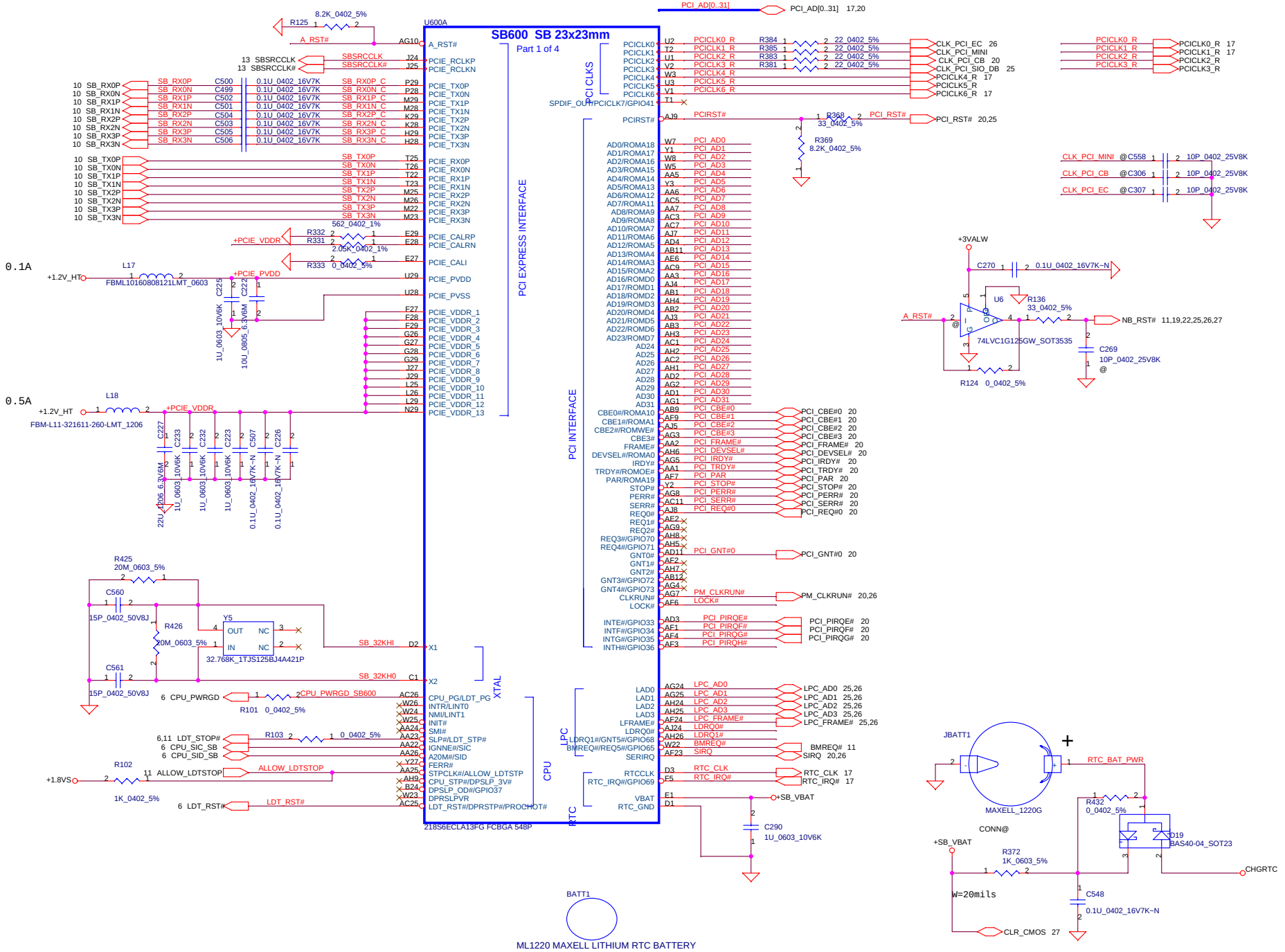

Security Classification	Compal Secret Data		
Issued Date	2007/1/25	Deciphered Date	2008/01/25

THIS SHEET OF ENGINEERING DRAWING IS THE PROPRIETARY PROPERTY OF COMPAL ELECTRONICS, INC. AND CONTAINS CONFIDENTIAL AND TRADE SECRET INFORMATION. THIS SHEET MAY NOT BE TRANSFERED FROM THE CUSTODY OF THE COMPETENT DIVISION OF R&D DEPARTMENT EXCEPT AS AUTHORIZED BY COMPAL ELECTRONICS, INC. NEITHER THIS SHEET NOR THE INFORMATION IT CONTAINS MAY BE USED BY OR DISCLOSED TO ANY THIRD PARTY WITHOUT PRIOR WRITTEN CONSENT OF COMPAL ELECTRONICS, INC.

Title: **SB600-PCI_EXP/PCI/LPC/RTC**

Size	Document Number	Rev
Custom	LA-3611P	0.4

Date: Wednesday, April 11, 2007 Sheet 15 of 40

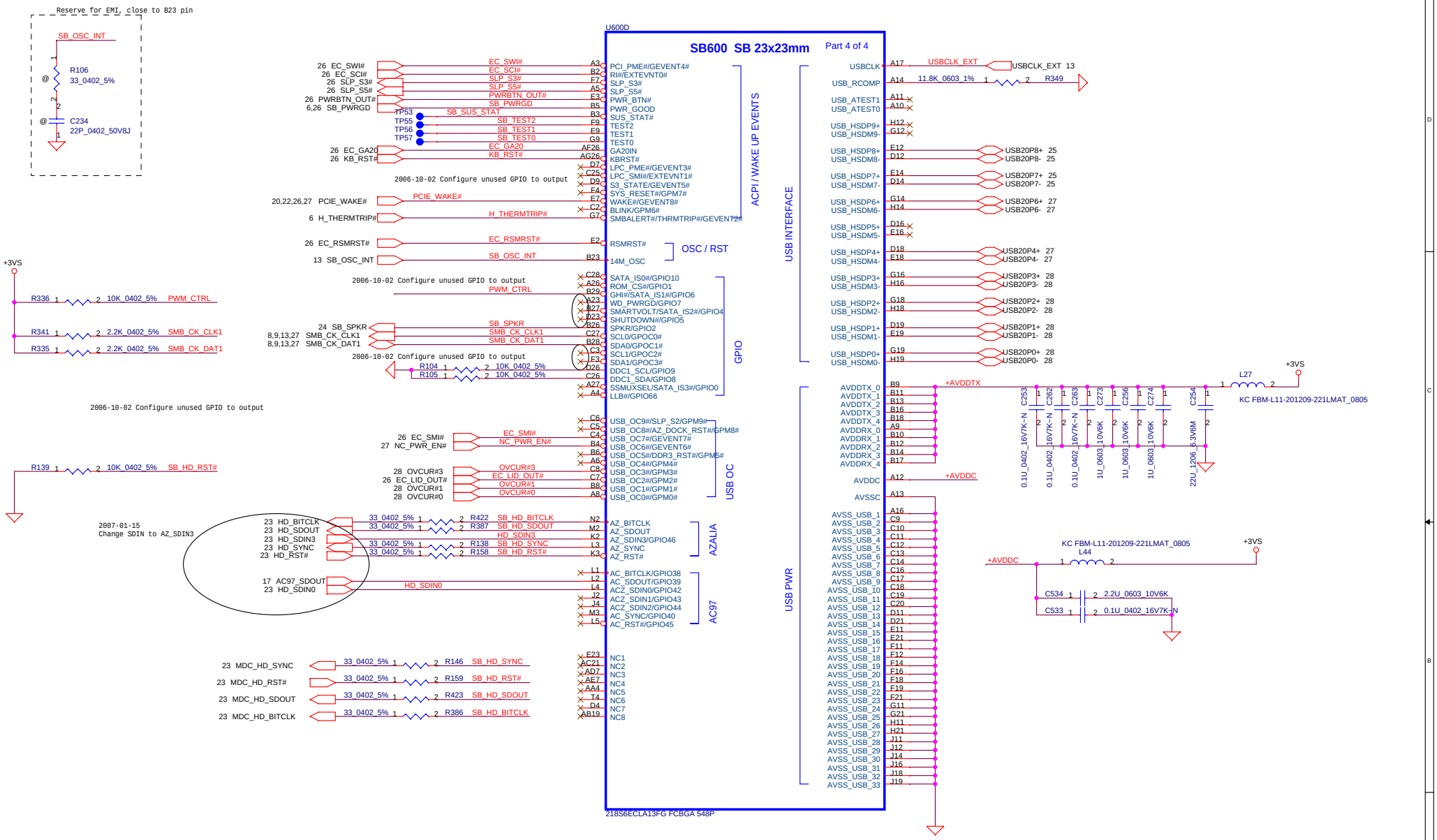

Security Classification	Compal Secret Data		
Issued Date	2007/1/25	Deciphered Date	2008/01/25

THIS SHEET OF ENGINEERING DRAWING IS THE PROPRIETARY PROPERTY OF COMPAL ELECTRONICS, INC. AND CONTAINS CONFIDENTIAL AND TRADE SECRET INFORMATION. THIS SHEET MAY NOT BE TRANSFERED FROM THE CUSTODY OF THE COMPETENT DIVISION OF R&D DEPARTMENT EXCEPT AS AUTHORIZED BY COMPAL ELECTRONICS, INC. NEITHER THIS SHEET NOR THE INFORMATION IT CONTAINS MAY BE USED BY OR DISCLOSED TO ANY THIRD PARTY WITHOUT PRIOR WRITTEN CONSENT OF COMPAL ELECTRONICS, INC.

Title: **SB600 USB/ACPI/AC97/GPIO**

Size	Document Number	Rev
Custom	LA-3611P	0.4

Date: Wednesday, April 11, 2007 | Sheet 16 of 40

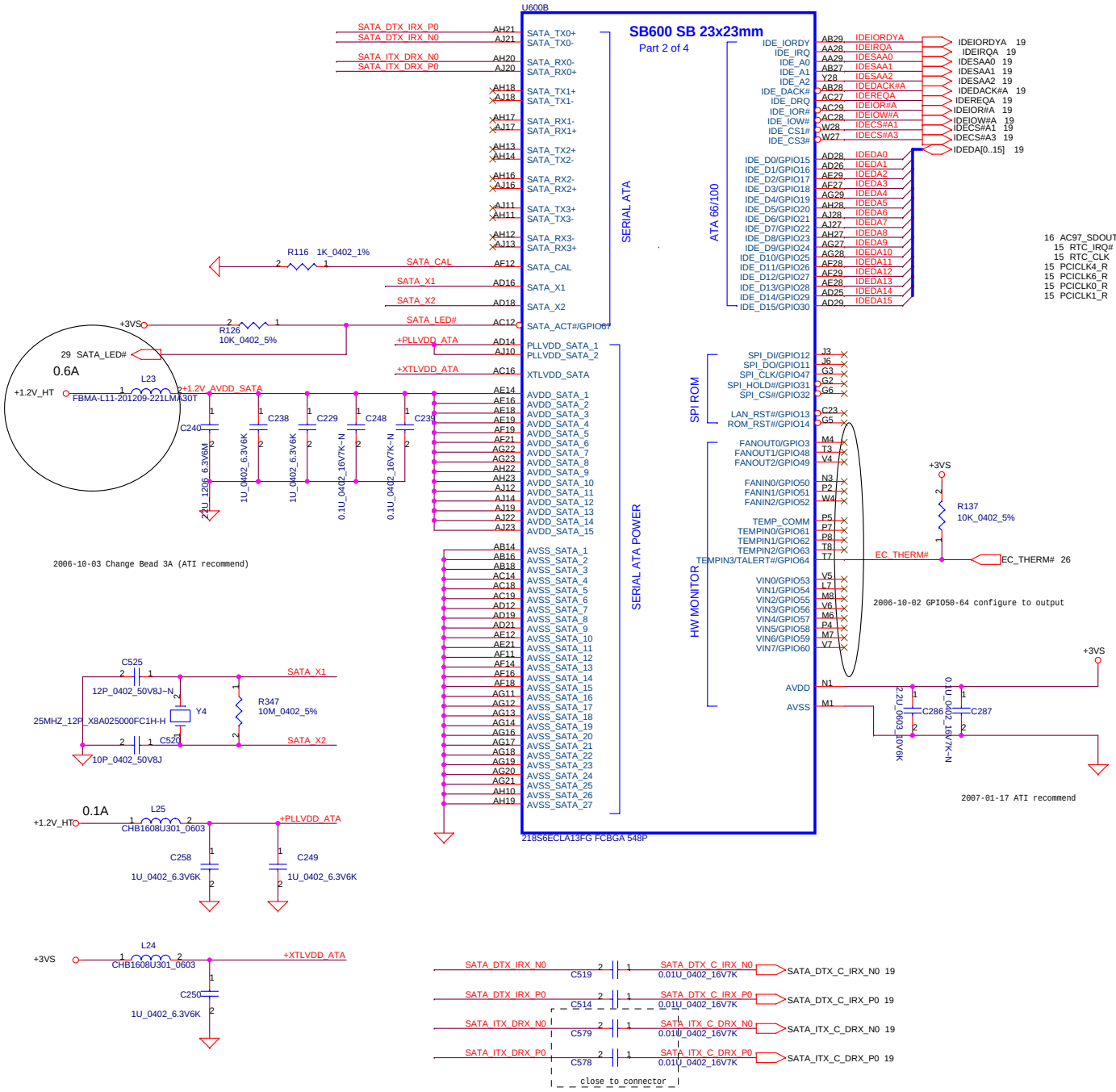

REQUIRED STRAPS

SB600 HAS 15K INTERNAL PD FOR AC_SDATA_OUT, 15K PU FOR RTC_CLK, EXTERNAL PU/PD IS NOT REQUIRED; FOR SB460, EXTERNAL PU/PD ARE REQUIRED

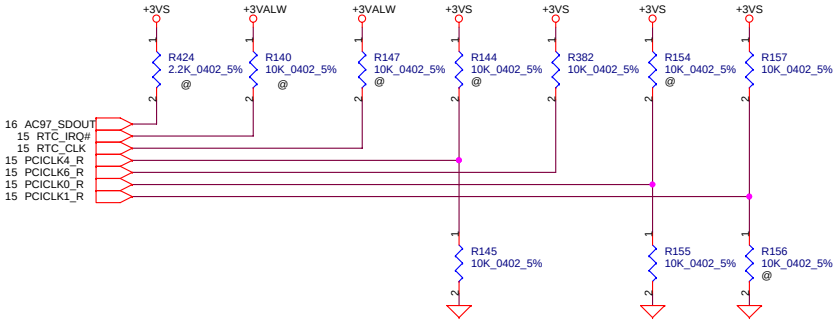

	AC97_SDOUT	RTC_CLK	PCICLK4_R	PCICLK6_R	PCICLK1_R PCICLK0_R
PULL HIGH	USE DEBUG STRAPS	INTERNAL RTC DEFAULT	USE INT. PLL48	CPU IF=K8 DEFAULT	ROM TYPE: H, H = PCI ROM; H, L = LPC I ROM DEFAULT; L, H = LPC II ROM; L, L = FWH ROM
PULL LOW	IGNORE DEBUG STRAPS DEFAULT	EXTERNAL RTC	USE EXT. 48MHZ DEFAULT	CPU IF=P4	NOTE: FOR SB460, PCICLK[8:7] ARE CONNECTED TO SUBSTRATE BALLS PCICLK[1:0]

DEBUG STRAPS

SB600 HAS 15K INTERNAL PU FOR PCI_AD[28:23]

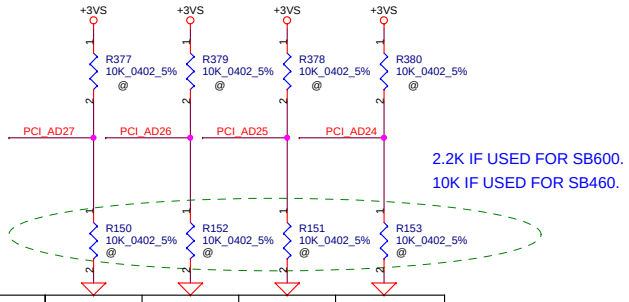

2.2K IF USED FOR SB600.
10K IF USED FOR SB460.

	PCI_AD27	PCI_AD26	PCI_AD25	PCI_AD24
PULL HIGH	USE PCI PLL DEFAULT	USE ACPI BCLK DEFAULT	USE IDE PLL DEFAULT	USE DEFAULT PCIE STRAPS DEFAULT
PULL LOW	BYPASS PCI PLL	BYPASS ACPI BCLK	BYPASS IDE PLL	USE EEPROM PCIE STRAPS

Security Classification	Compal Secret Data		
Issued Date	2007/1/25	Deciphered Date	2008/01/25

THIS SHEET OF ENGINEERING DRAWING IS THE PROPRIETARY PROPERTY OF COMPAL ELECTRONICS, INC. AND CONTAINS CONFIDENTIAL AND TRADE SECRET INFORMATION. THIS SHEET MAY NOT BE TRANSFERED FROM THE CUSTODY OF THE COMPETENT DIVISION OF R&D DEPARTMENT EXCEPT AS AUTHORIZED BY COMPAL ELECTRONICS, INC. NEITHER THIS SHEET NOR THE INFORMATION IT CONTAINS MAY BE USED BY OR DISCLOSED TO ANY THIRD PARTY WITHOUT PRIOR WRITTEN CONSENT OF COMPAL ELECTRONICS, INC.

Title	SB600 IDE/SATA/HW Strap		
Size Custom	Document Number LA-3611P		Rev 0.4
Date: Wednesday, April 11, 2007	Sheet 17 of 40		

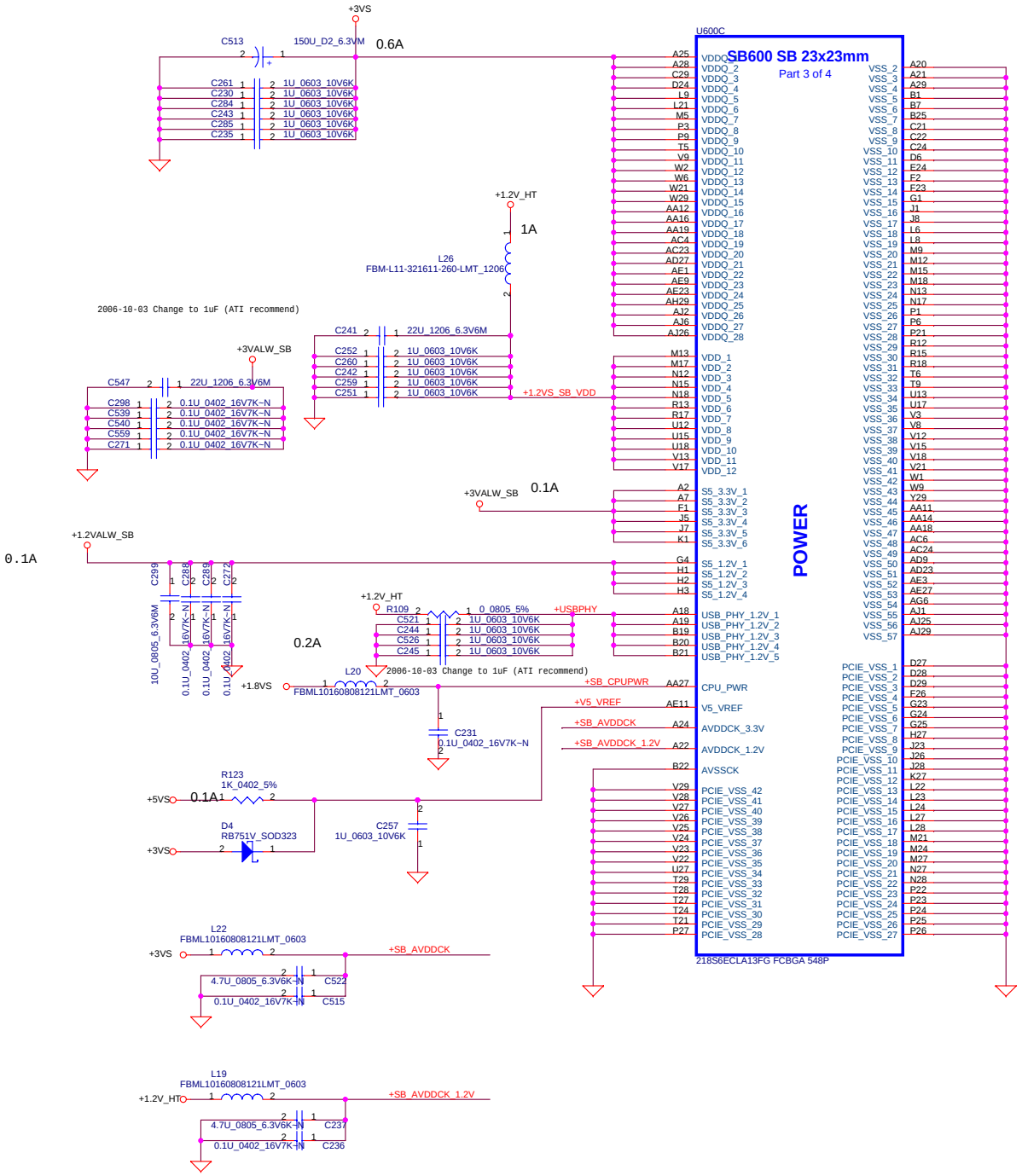

+3VALW TO +3VALW_SB

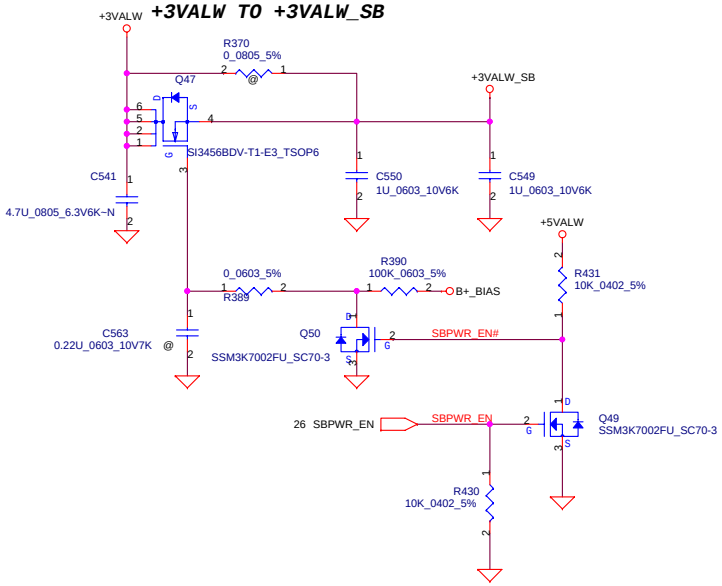

+1.2VALW TO +1.2VALW_SB

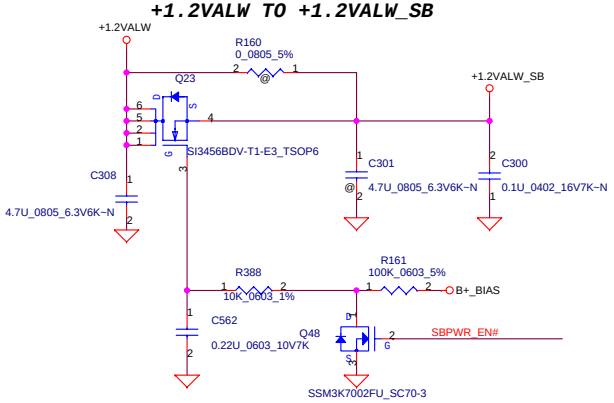

Security Classification	Compal Secret Data		
Issued Date	2007/1/25	Deciphered Date	2008/01/25

THIS SHEET OF ENGINEERING DRAWING IS THE PROPRIETARY PROPERTY OF COMPAL ELECTRONICS, INC. AND CONTAINS CONFIDENTIAL AND TRADE SECRET INFORMATION. THIS SHEET MAY NOT BE TRANSFERED FROM THE CUSTODY OF THE COMPETENT DIVISION OF R&D DEPARTMENT EXCEPT AS AUTHORIZED BY COMPAL ELECTRONICS, INC. NEITHER THIS SHEET NOR THE INFORMATION IT CONTAINS MAY BE USED BY OR DISCLOSED TO ANY THIRD PARTY WITHOUT PRIOR WRITTEN CONSENT OF COMPAL ELECTRONICS, INC.

Title: **SB600 Power/GND**

Size: Custom | Document Number: **LA-3611P** | Rev: 0.4

Date: Wednesday, April 11, 2007 | Sheet 18 of 40

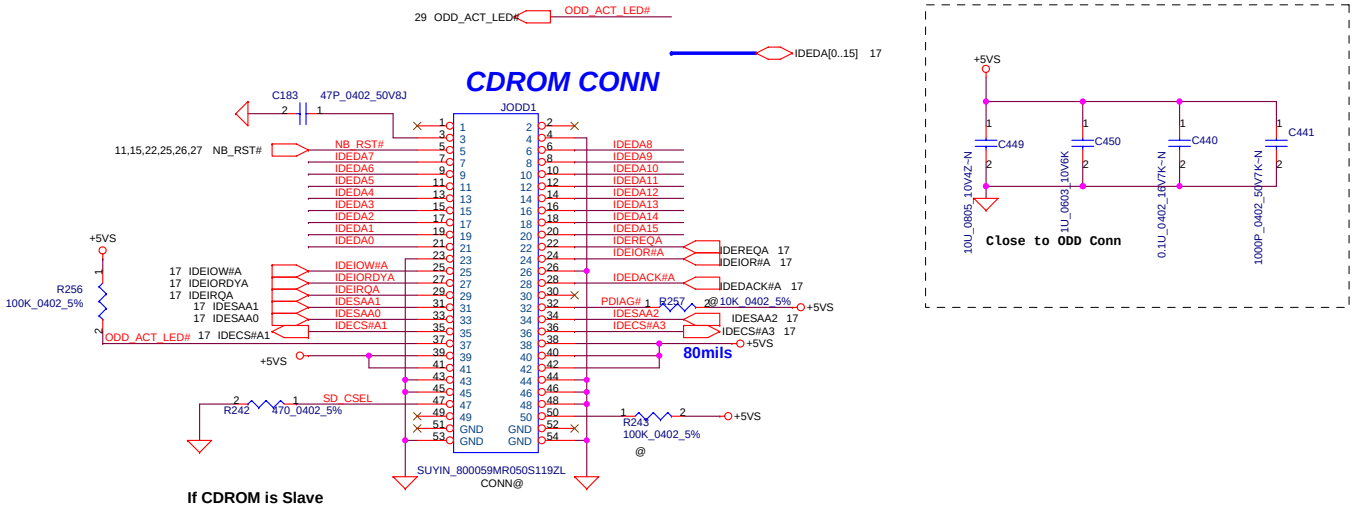

If CDROM is Slave
then SD_CSEL= Floating
else SD_CSEL= Low

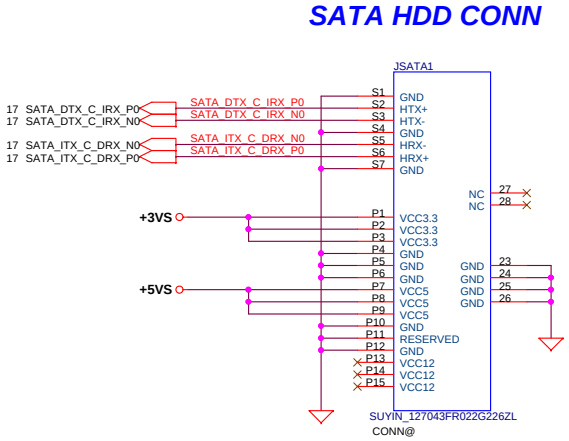

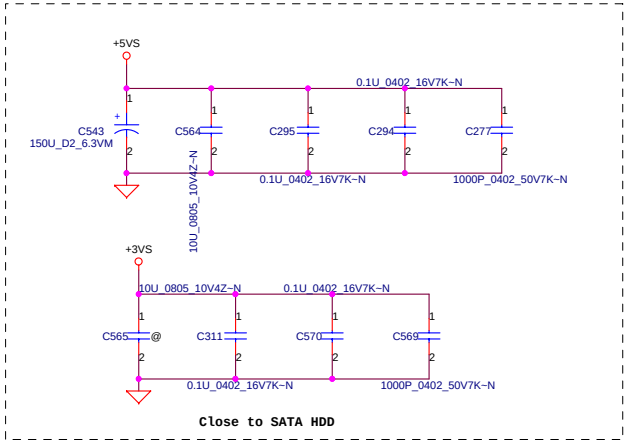

Security Classification	Compal Secret Data		
Issued Date	2007/1/25	Deciphered Date	2008/01/25

THIS SHEET OF ENGINEERING DRAWING IS THE PROPRIETARY PROPERTY OF COMPAL ELECTRONICS, INC. AND CONTAINS CONFIDENTIAL AND TRADE SECRET INFORMATION. THIS SHEET MAY NOT BE TRANSFERED FROM THE CUSTODY OF THE COMPETENT DIVISION OF R&D DEPARTMENT EXCEPT AS AUTHORIZED BY COMPAL ELECTRONICS, INC. NEITHER THIS SHEET NOR THE INFORMATION IT CONTAINS MAY BE USED BY OR DISCLOSED TO ANY THIRD PARTY WITHOUT PRIOR WRITTEN CONSENT OF COMPAL ELECTRONICS, INC.

Title: **HDD/CDROM**

Size: Custom | Document Number: **LA-3611P** | Rev: 0.4

Date: Wednesday, April 11, 2007 | Sheet 19 of 40

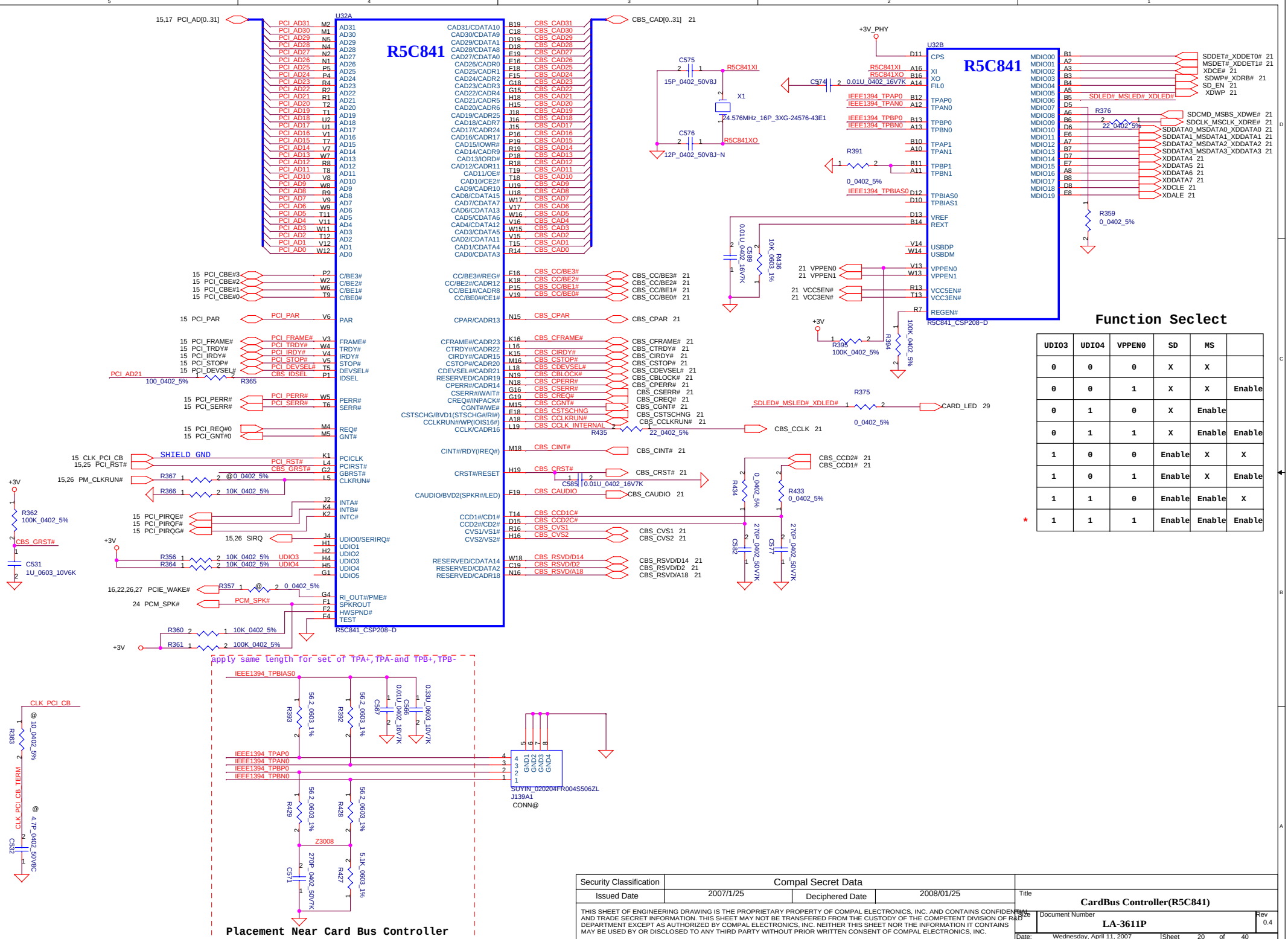

UDIO3	UDIO4	VPPEN0	SD	MS	
0	0	0	X	X	
0	0	1	X	X	Enable
0	1	0	X	Enable	
0	1	1	X	Enable	Enable
1	0	0	Enable	X	X
1	0	1	Enable	X	Enable
1	1	0	Enable	Enable	X
* 1	1	1	Enable	Enable	Enable

THIS SHEET OF ENGINEERING DRAWING IS THE PROPRIETARY PROPERTY OF COMPAL ELECTRONICS, INC. AND CONTAINS CONFIDENTIAL AND TRADE SECRET INFORMATION. THIS SHEET MAY NOT BE TRANSFERED FROM THE CUSTODY OF THE COMPETENT DIVISION OF R&D DEPARTMENT EXCEPT AS AUTHORIZED BY COMPAL ELECTRONICS, INC. NEITHER THIS SHEET NOR THE INFORMATION IT CONTAINS MAY BE USED BY OR DISCLOSED TO ANY THIRD PARTY WITHOUT PRIOR WRITTEN CONSENT OF COMPAL ELECTRONICS, INC.

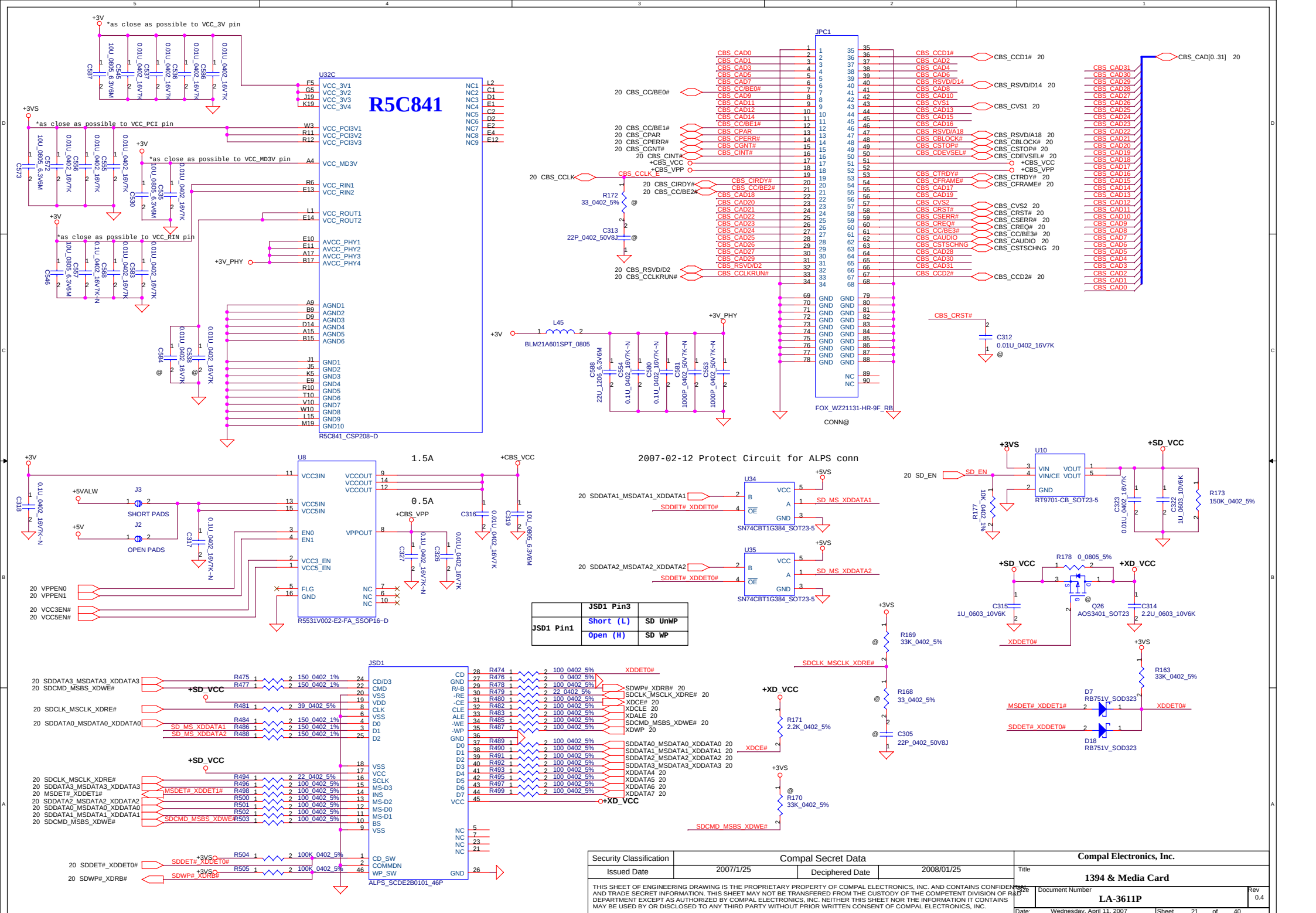

JSD1 Pin1	JSD1 Pin3	
	Short (L)	SD UnWP
	Open (H)	SD WP

Security Classification	Compal Secret Data		
Issued Date	2007/1/25	Deciphered Date	2008/01/25

THIS SHEET OF ENGINEERING DRAWING IS THE PROPRIETARY PROPERTY OF COMPAL ELECTRONICS, INC. AND CONTAINS CONFIDENTIAL AND TRADE SECRET INFORMATION. THIS SHEET MAY NOT BE TRANSFERRED FROM THE CUSTODY OF THE COMPETENT DIVISION OF R&D DEPARTMENT EXCEPT AS AUTHORIZED BY COMPAL ELECTRONICS, INC. NEITHER THIS SHEET NOR THE INFORMATION IT CONTAINS MAY BE USED BY OR DISCLOSED TO ANY THIRD PARTY WITHOUT PRIOR WRITTEN CONSENT OF COMPAL ELECTRONICS, INC.

Compal Electronics, Inc.

Title: 1394 & Media Card

Size: | Document Number: LA-3611P | Rev: 0.4

Date: Wednesday, April 11, 2007 | Sheet 21 of 40

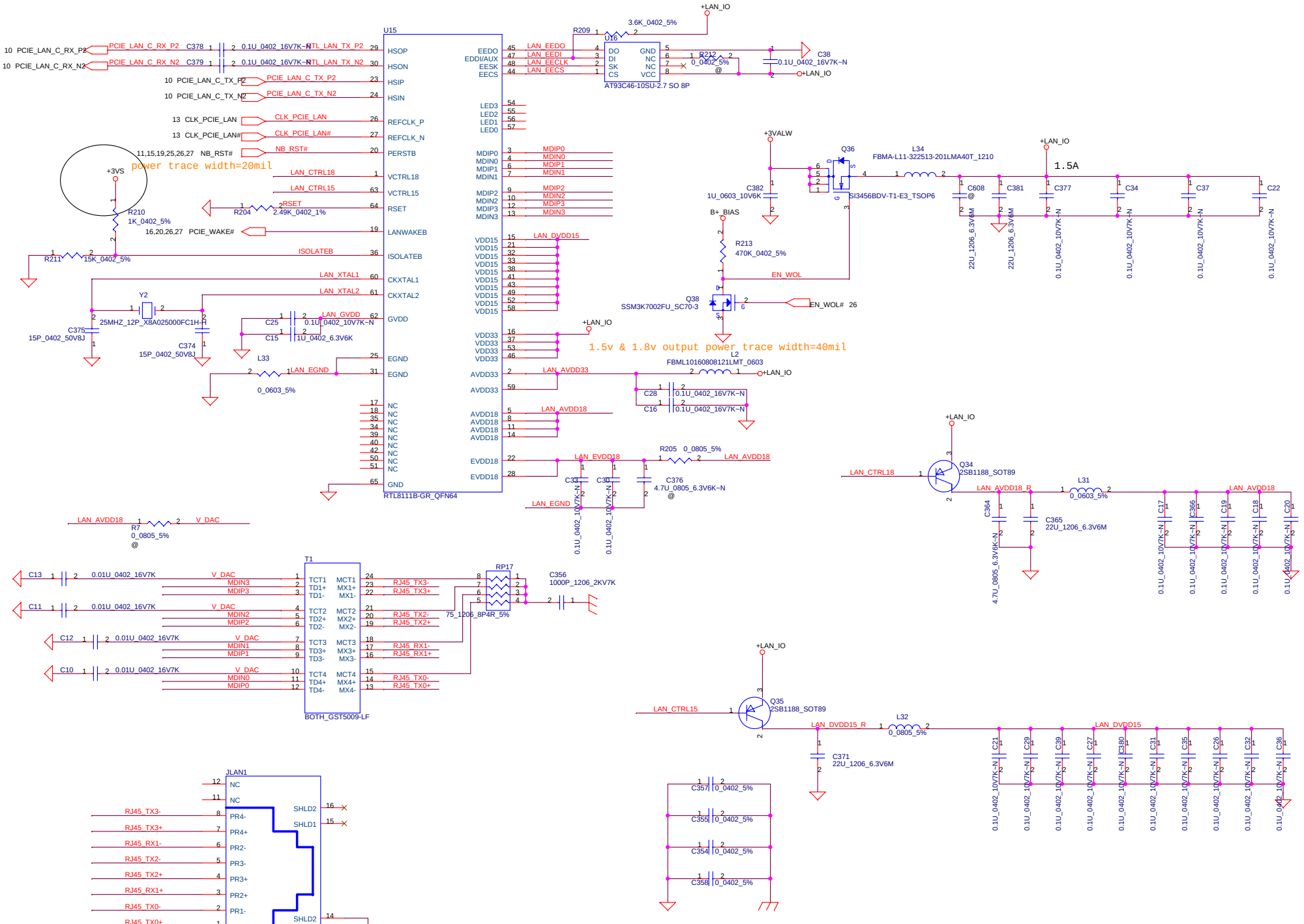

Security Classification	Compal Secret Data		
Issued Date	2007/1/25	Deciphered Date	2008/01/25

THIS SHEET OF ENGINEERING DRAWING IS THE PROPRIETARY PROPERTY OF COMPAL ELECTRONICS, INC. AND CONTAINS CONFIDENTIAL AND TRADE SECRET INFORMATION. THIS SHEET MAY NOT BE TRANSFERED FROM THE CUSTODY OF THE COMPETENT DIVISION OF R&D DEPARTMENT EXCEPT AS AUTHORIZED BY COMPAL ELECTRONICS, INC. NEITHER THIS SHEET NOR THE INFORMATION IT CONTAINS MAY BE USED BY OR DISCLOSED TO ANY THIRD PARTY WITHOUT PRIOR WRITTEN CONSENT OF COMPAL ELECTRONICS, INC.

Title: **Realtek 8100CL/RJ45**

Size: Custom | Document Number: **LA-3611P** | Rev: 0.4

Date: Wednesday, April 11, 2007 | Sheet 22 of 40

MDC CONN.

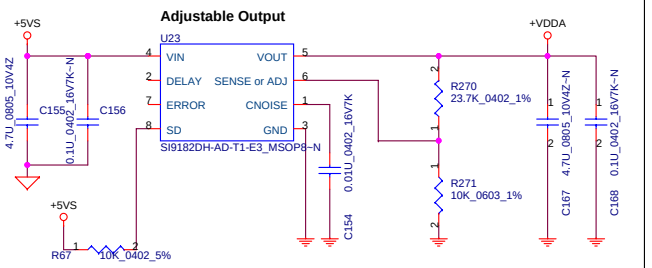

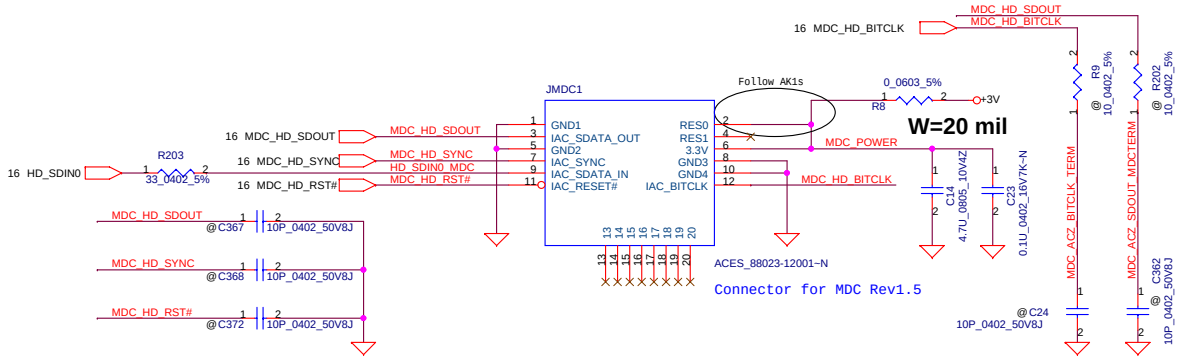

HD Audio Codec

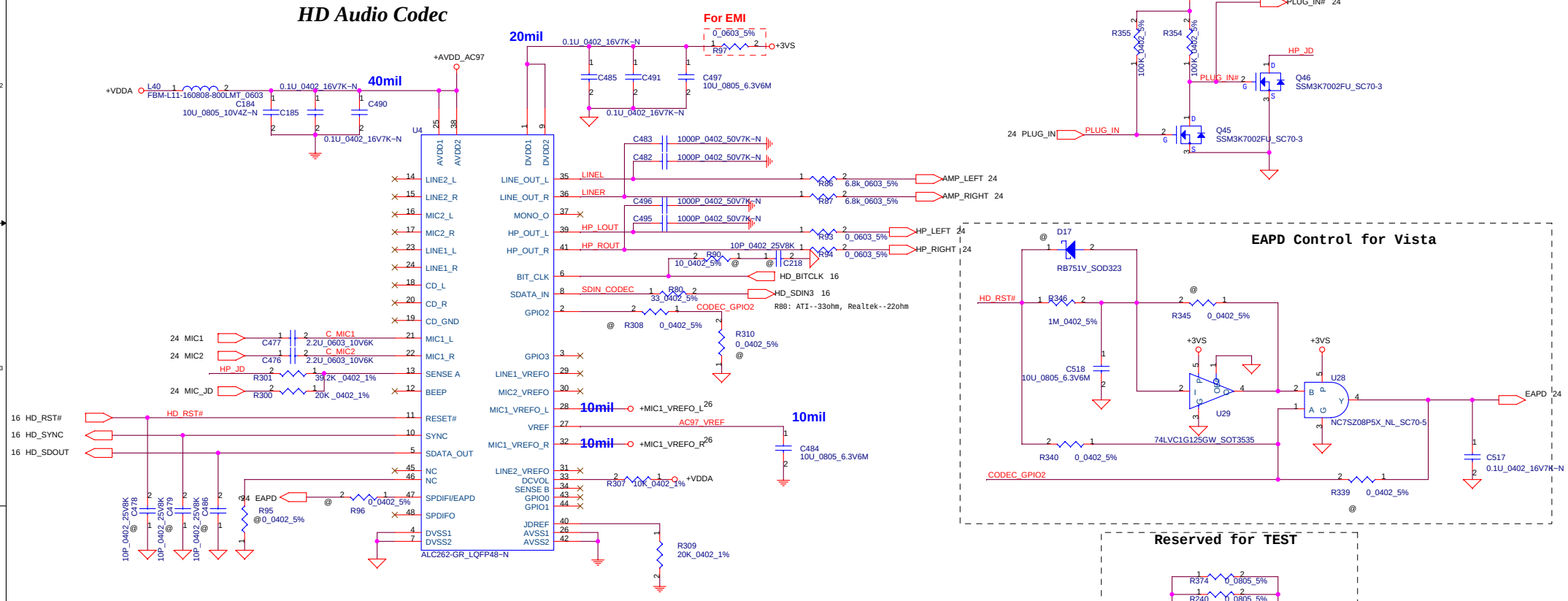

Security Classification	Compal Secret Data		
Issued Date	2007/1/25	Deciphered Date	2008/01/25

THIS SHEET OF ENGINEERING DRAWING IS THE PROPRIETARY PROPERTY OF COMPAL ELECTRONICS, INC. AND CONTAINS CONFIDENTIAL AND TRADE SECRET INFORMATION. THIS SHEET MAY NOT BE TRANSFERED FROM THE CUSTODY OF THE COMPETENT DIVISION OF R&D DEPARTMENT EXCEPT AS AUTHORIZED BY COMPAL ELECTRONICS, INC. NEITHER THIS SHEET NOR THE INFORMATION IT CONTAINS MAY BE USED BY OR DISCLOSED TO ANY THIRD PARTY WITHOUT PRIOR WRITTEN CONSENT OF COMPAL ELECTRONICS, INC.

Compal Electronics, Inc.

Title: **Codec ALC262**

Size | Document Number: **LA-3611P** | Rev: 0.4

Date: Wednesday, April 11, 2007 | Sheet 23 of 40

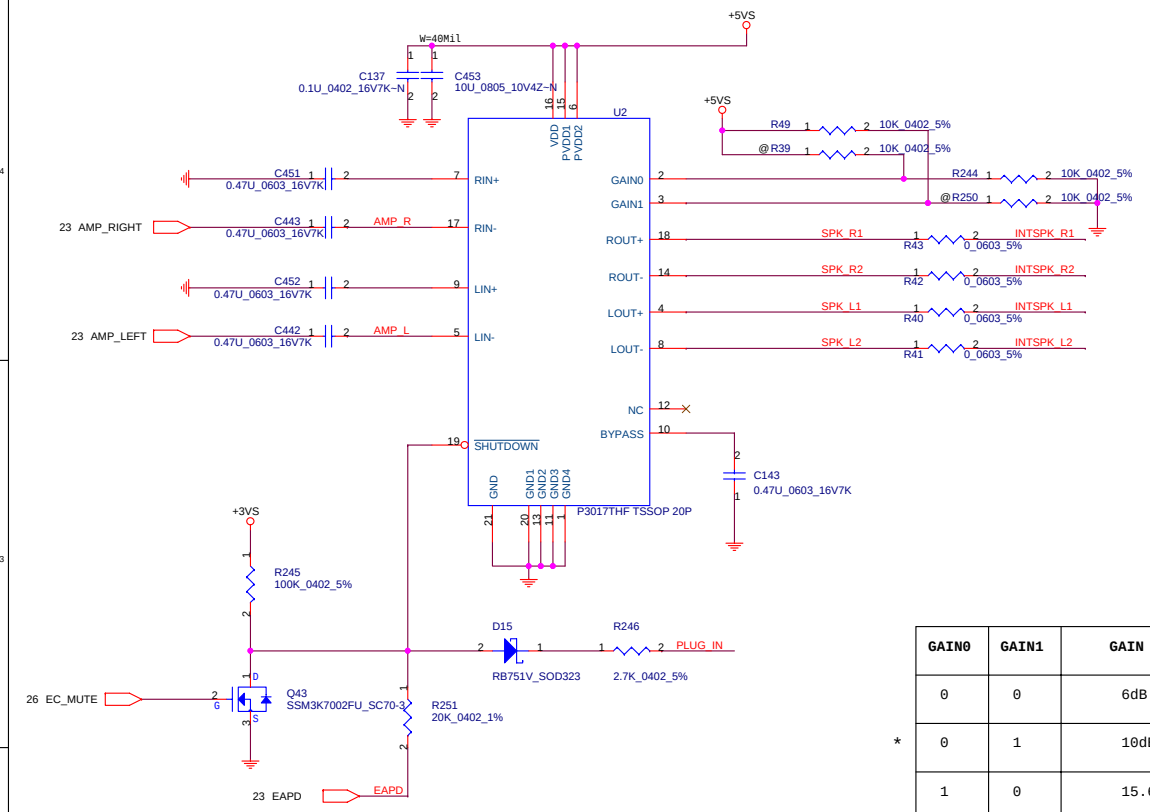

GAIN0	GAIN1	GAIN
0	0	6dB
0	1	10dB
1	0	15.6dB
1	1	21.6dB

*

Buzzer need to support ICH/PCM_SPK/Battery_low and WL_on/off

Speaker Connector

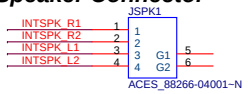

MICROPHONE IN JACK

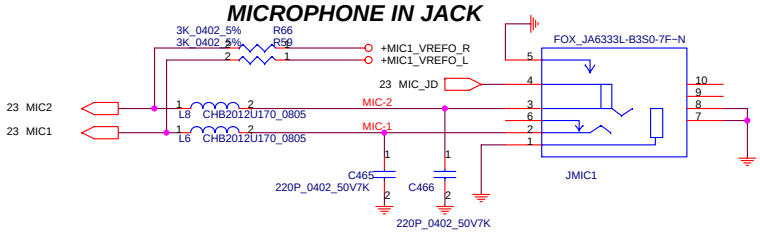

HEADPHONE OUT JACK

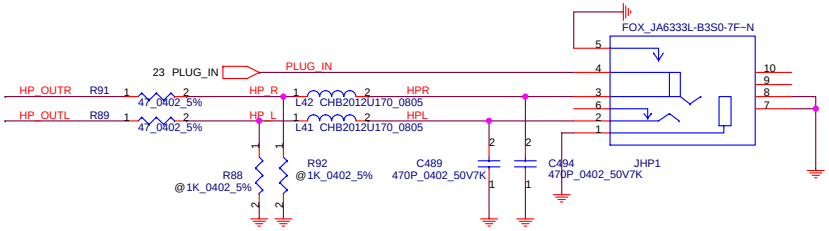

Buzzer

EC Beep

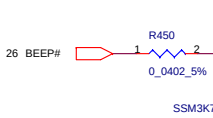

CardBus Beep

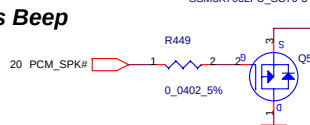

ICH Beep

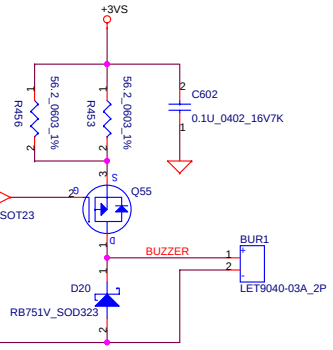

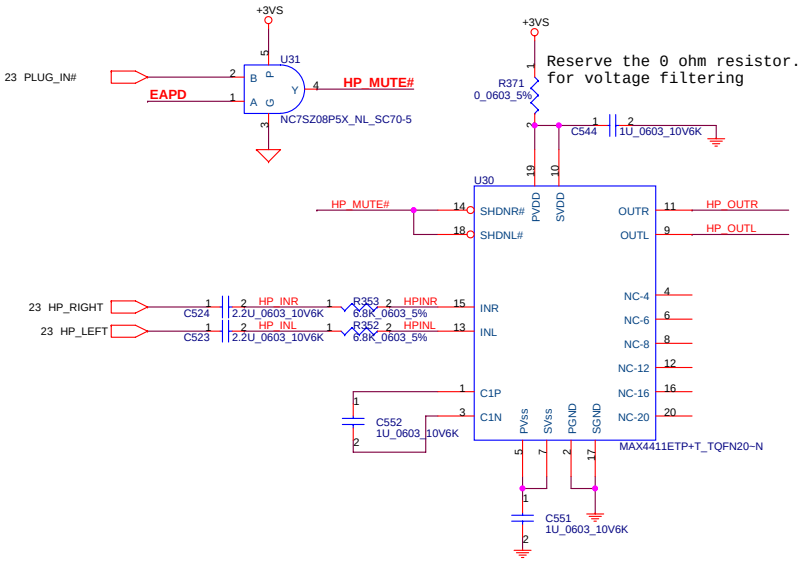

Reserve the 0 ohm resistor. for voltage filtering

Security Classification	Compal Secret Data		
Issued Date	2007/1/25	Deciphered Date	2008/01/25

THIS SHEET OF ENGINEERING DRAWING IS THE PROPRIETARY PROPERTY OF COMPAL ELECTRONICS, INC. AND CONTAINS CONFIDENTIAL AND TRADE SECRET INFORMATION. THIS SHEET MAY NOT BE TRANSFERED FROM THE CUSTODY OF THE COMPETENT DIVISION OF R&D DEPARTMENT EXCEPT AS AUTHORIZED BY COMPAL ELECTRONICS, INC. NEITHER THIS SHEET NOR THE INFORMATION IT CONTAINS MAY BE USED BY OR DISCLOSED TO ANY THIRD PARTY WITHOUT PRIOR WRITTEN CONSENT OF COMPAL ELECTRONICS, INC.

Compal Electronics, Inc.

Title: **AMP/Audio Jack**

Size | Document Number: *LA-3611P* | Rev 0.4

Date: Wednesday, April 11, 2007 | Sheet 24 of 40

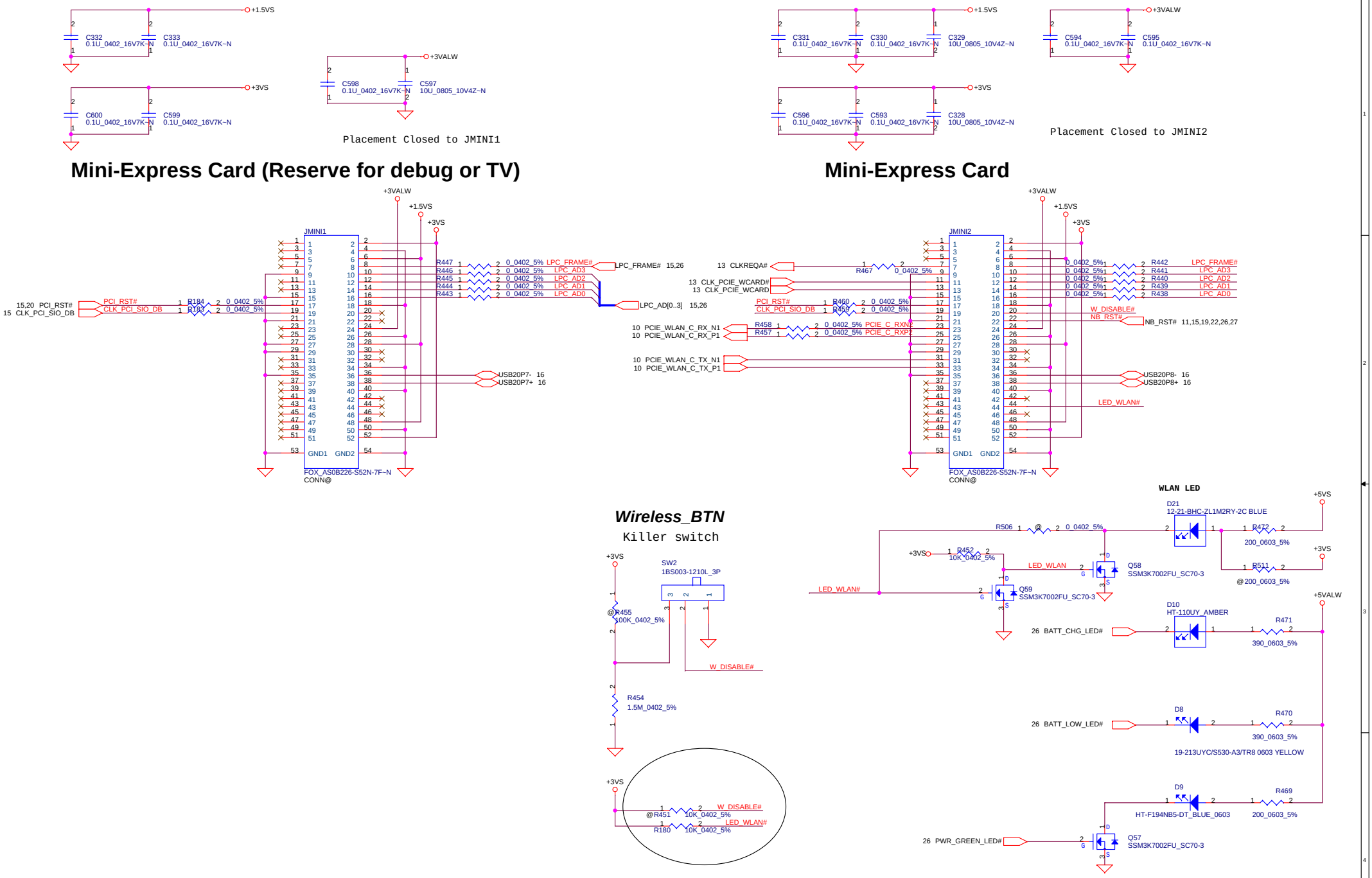

Security Classification	Compal Secret Data		
Issued Date	2007/1/25	Deciphered Date	2008/01/25

THIS SHEET OF ENGINEERING DRAWING IS THE PROPRIETARY PROPERTY OF COMPAL ELECTRONICS, INC. AND CONTAINS CONFIDENTIAL AND TRADE SECRET INFORMATION. THIS SHEET MAY NOT BE TRANSFERRED FROM THE CUSTODY OF THE COMPETENT DIVISION OF R&D DEPARTMENT EXCEPT AS AUTHORIZED BY COMPAL ELECTRONICS, INC. NEITHER THIS SHEET NOR THE INFORMATION IT CONTAINS MAY BE USED BY OR DISCLOSED TO ANY THIRD PARTY WITHOUT PRIOR WRITTEN CONSENT OF COMPAL ELECTRONICS, INC.

Title: **MINICARD**

Size: Custom | Document Number: **LA-3611P** | Rev: 0.4

Date: Wednesday, April 11, 2007 | Sheet 25 of 40

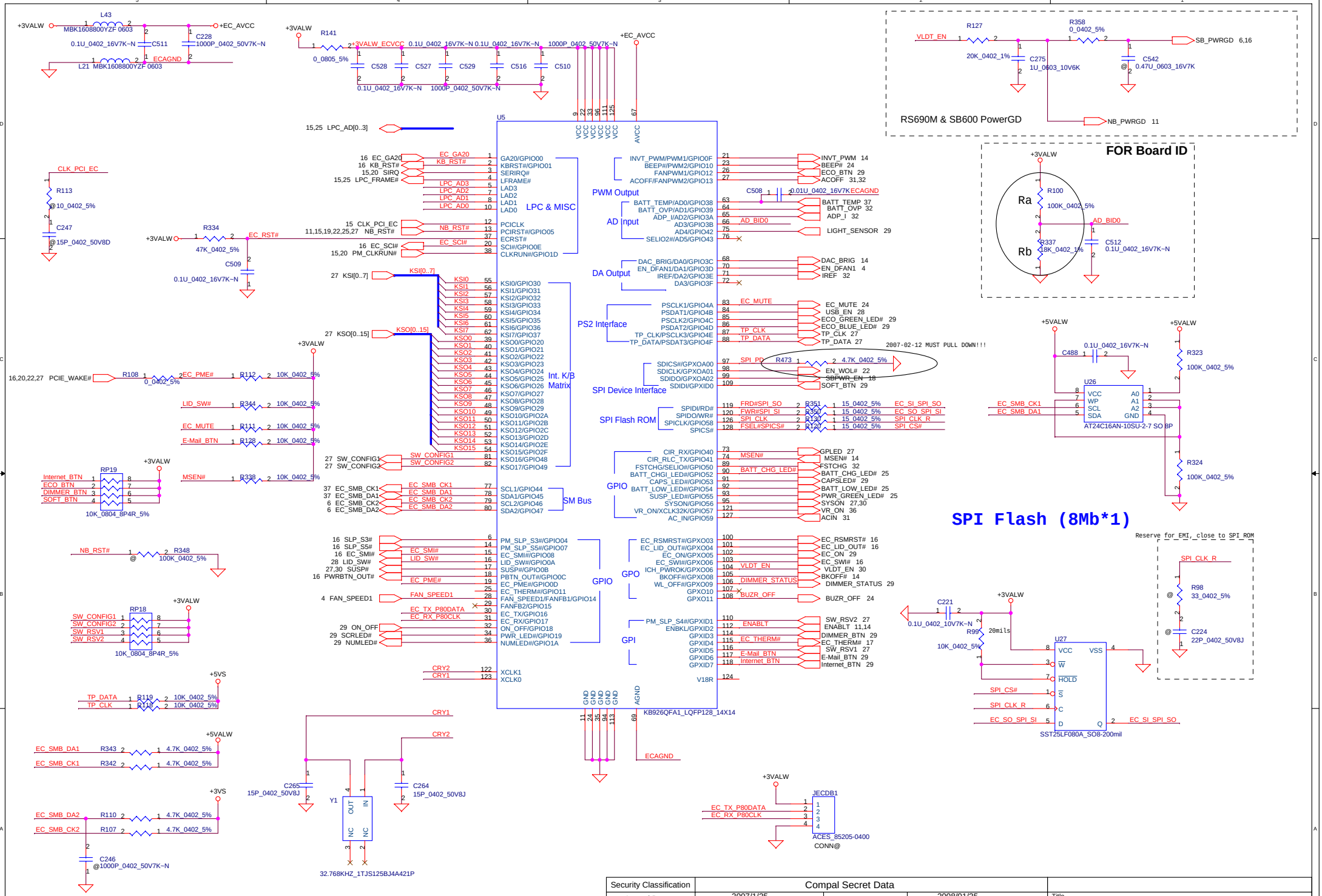

Security Classification	Compal Secret Data		
Issued Date	2007/1/25	Deciphered Date	2008/01/25

THIS SHEET OF ENGINEERING DRAWING IS THE PROPRIETARY PROPERTY OF COMPAL ELECTRONICS, INC. AND CONTAINS CONFIDENTIAL AND TRADE SECRET INFORMATION. THIS SHEET MAY NOT BE TRANSFERRED FROM THE CUSTODY OF THE COMPETENT DIVISION OF R&D DEPARTMENT EXCEPT AS AUTHORIZED BY COMPAL ELECTRONICS, INC. NEITHER THIS SHEET NOR THE INFORMATION IT CONTAINS MAY BE USED BY OR DISCLOSED TO ANY THIRD PARTY WITHOUT PRIOR WRITTEN CONSENT OF COMPAL ELECTRONICS, INC.

Title: **KB926&BIOS**

Size	Document Number	Rev
Custom	LA-3611P	0.4

Date: Wednesday, April 11, 2007 Sheet 26 of 40

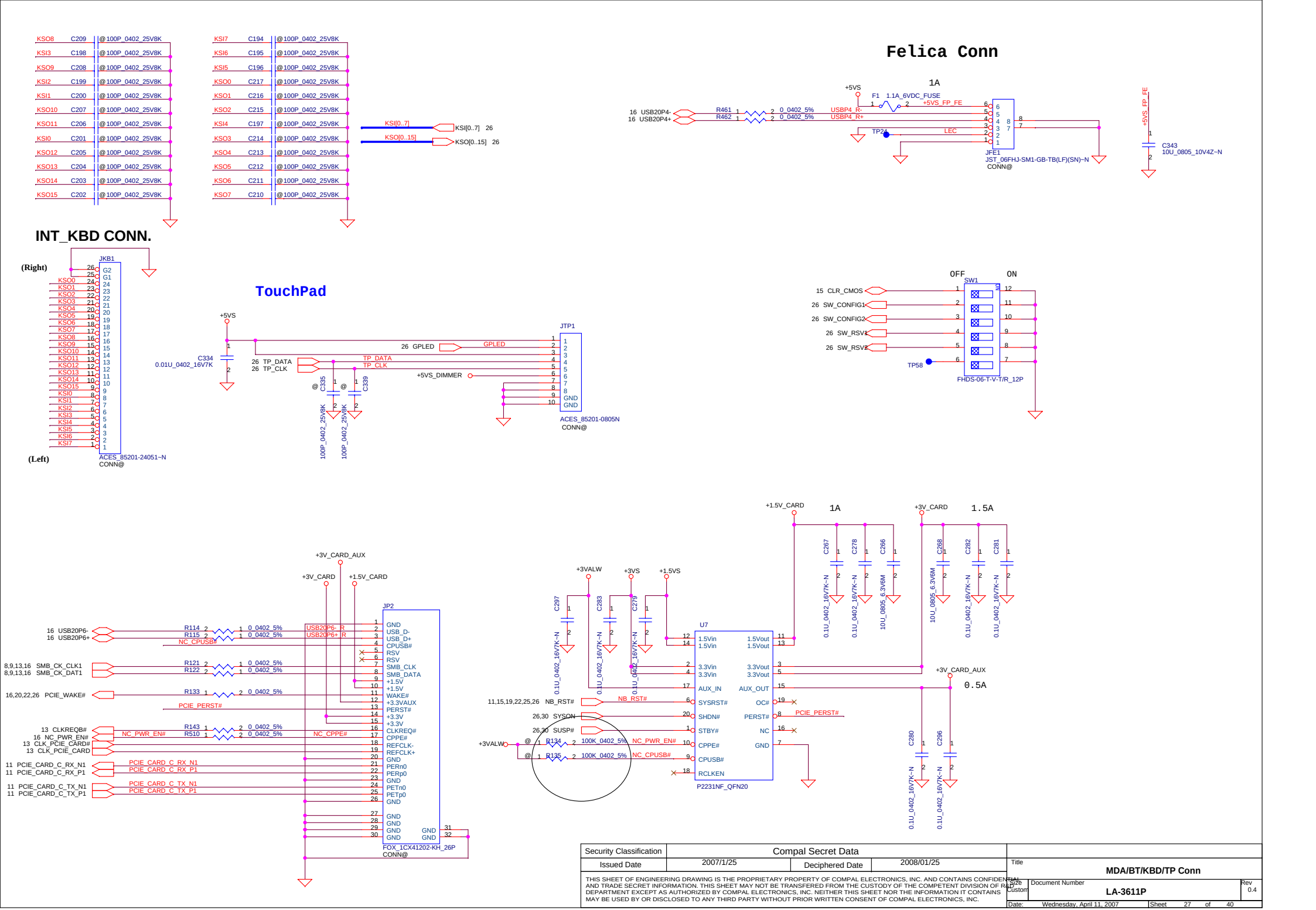

THIS SHEET OF ENGINEERING DRAWING IS THE PROPRIETARY PROPERTY OF COMPAL ELECTRONICS, INC. AND CONTAINS CONFIDENTIAL AND TRADE SECRET INFORMATION. THIS SHEET MAY NOT BE TRANSFERED FROM THE CUSTODY OF THE COMPETENT DIVISION OF R&D DEPARTMENT EXCEPT AS AUTHORIZED BY COMPAL ELECTRONICS, INC. NEITHER THIS SHEET NOR THE INFORMATION IT CONTAINS MAY BE USED BY OR DISCLOSED TO ANY THIRD PARTY WITHOUT PRIOR WRITTEN CONSENT OF COMPAL ELECTRONICS, INC.

iPOD Charge when system shutdown

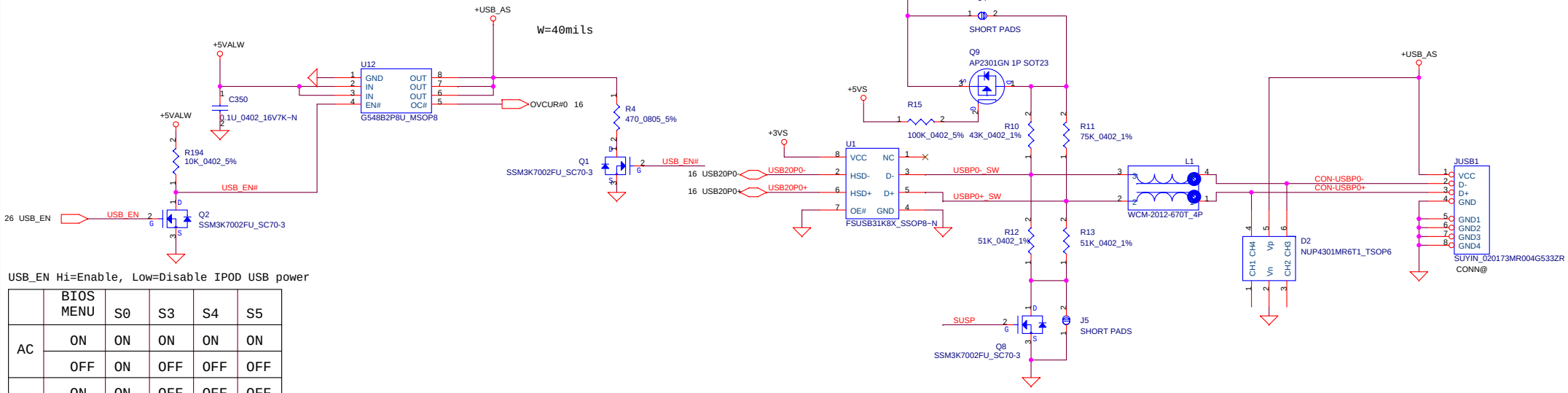

USB_EN Hi=Enable, Low=Disable IPOD USB power

	BIOS MENU	S0	S3	S4	S5
AC	ON	ON	ON	ON	ON
	OFF	ON	OFF	OFF	OFF
DC	ON	ON	OFF	OFF	OFF
	OFF	ON	OFF	OFF	OFF

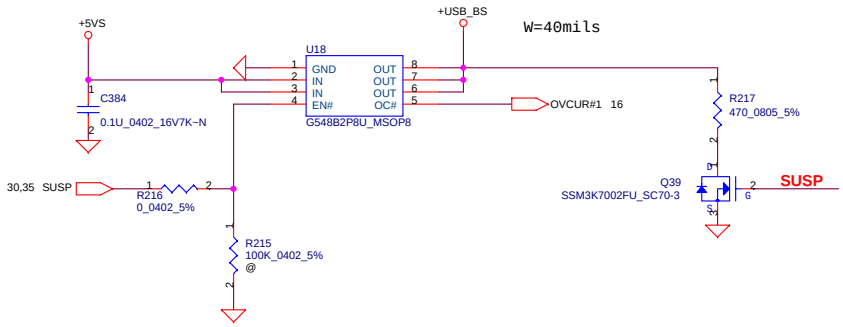

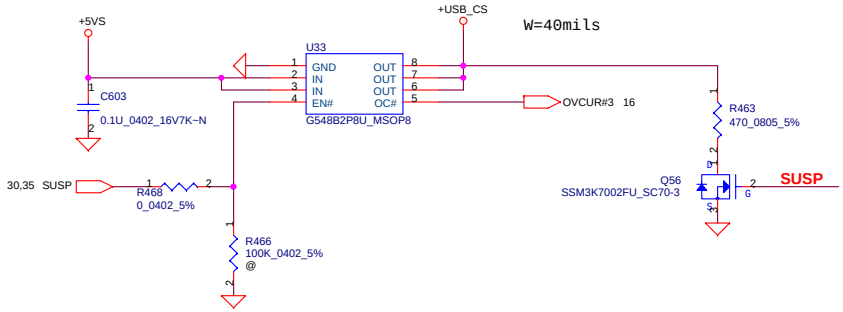

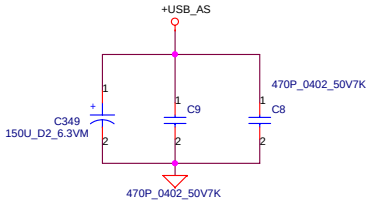

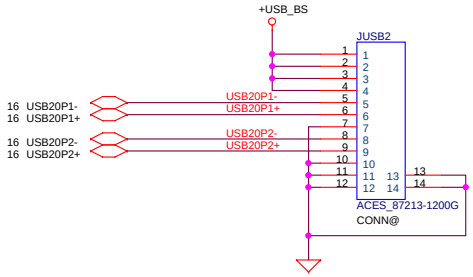

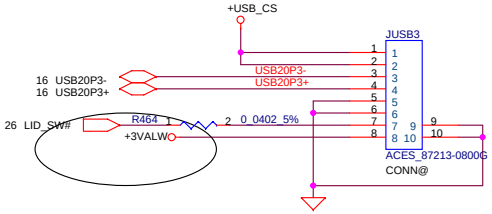

Security Classification	Compal Secret Data		
Issued Date	2007/1/25	Deciphered Date	2008/01/25

THIS SHEET OF ENGINEERING DRAWING IS THE PROPRIETARY PROPERTY OF COMPAL ELECTRONICS, INC. AND CONTAINS CONFIDENTIAL AND TRADE SECRET INFORMATION. THIS SHEET MAY NOT BE TRANSFERRED FROM THE CUSTODY OF THE COMPETENT DIVISION OF R&D DEPARTMENT EXCEPT AS AUTHORIZED BY COMPAL ELECTRONICS, INC. NEITHER THIS SHEET NOR THE INFORMATION IT CONTAINS MAY BE USED BY OR DISCLOSED TO ANY THIRD PARTY WITHOUT PRIOR WRITTEN CONSENT OF COMPAL ELECTRONICS, INC.

Compal Electronics, Inc.

Title: **USB Port**

Size | Document Number: **LA-3611P** | Rev: 0.4

Date: Wednesday, April 11, 2007 | Sheet 28 of 40

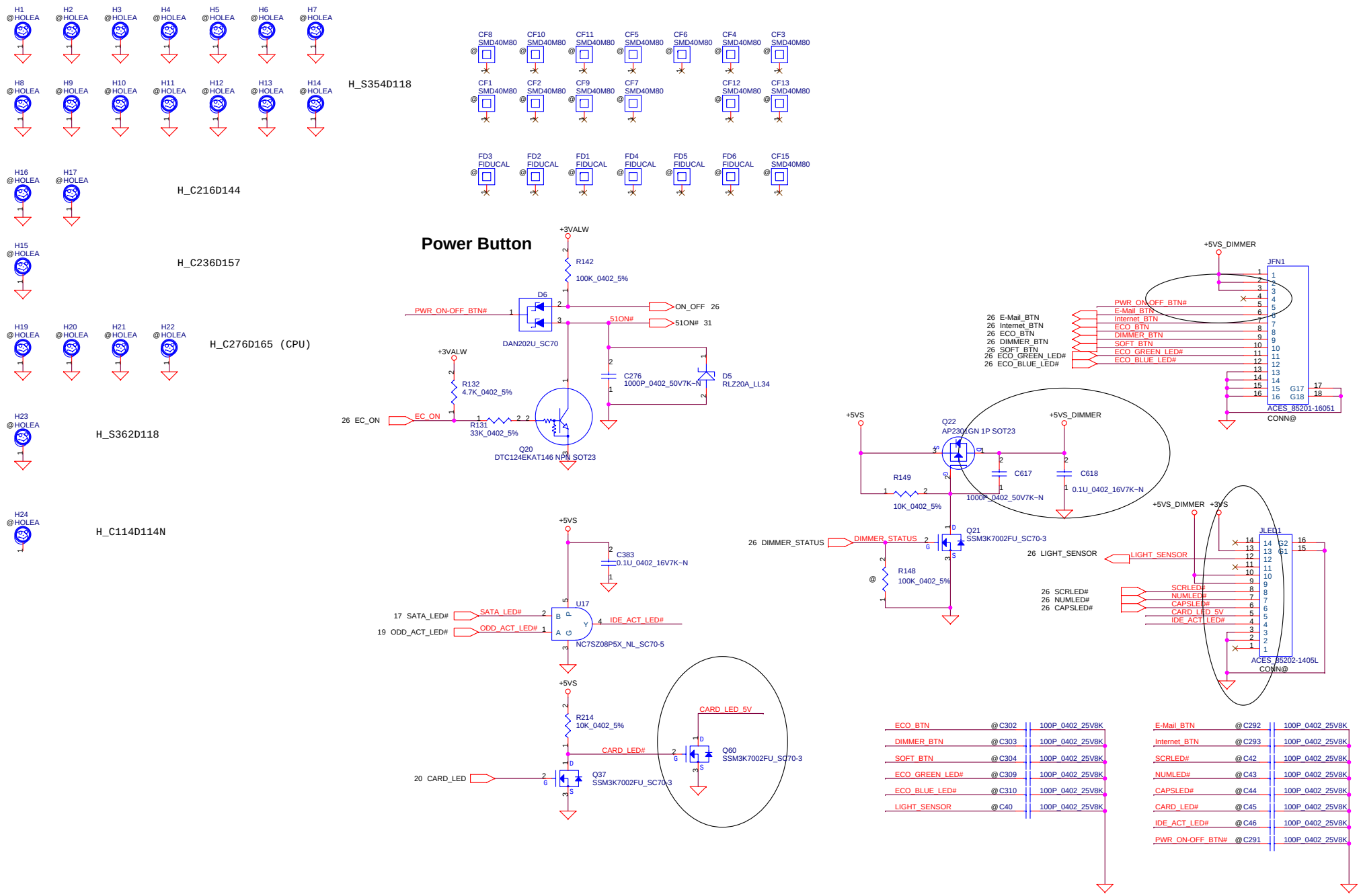

Security Classification	Compal Secret Data		
Issued Date	2007/1/25	Deciphered Date	2008/01/25

THIS SHEET OF ENGINEERING DRAWING IS THE PROPRIETARY PROPERTY OF COMPAL ELECTRONICS, INC. AND CONTAINS CONFIDENTIAL AND TRADE SECRET INFORMATION. THIS SHEET MAY NOT BE TRANSFERED FROM THE CUSTODY OF THE COMPETENT DIVISION OF R&D DEPARTMENT EXCEPT AS AUTHORIZED BY COMPAL ELECTRONICS, INC. NEITHER THIS SHEET NOR THE INFORMATION IT CONTAINS MAY BE USED BY OR DISCLOSED TO ANY THIRD PARTY WITHOUT PRIOR WRITTEN CONSENT OF COMPAL ELECTRONICS, INC.

Title: **PWR_OK/BTN**

Size: Custom | Document Number: **LA-3611P** | Rev: 0.4

Date: Wednesday, April 11, 2007 | Sheet 29 of 40

+5VALW TO +5V

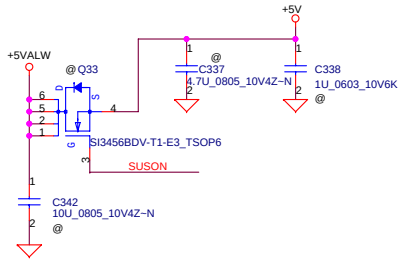

+5VALW TO +5VS

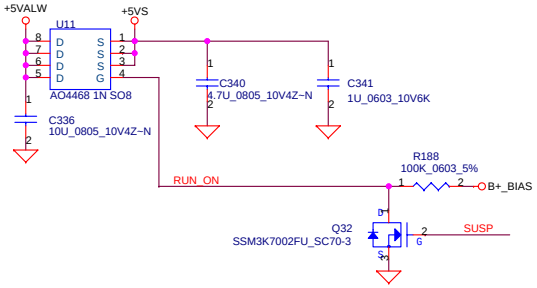

+1.2VALW TO +1.2V_NBCORE

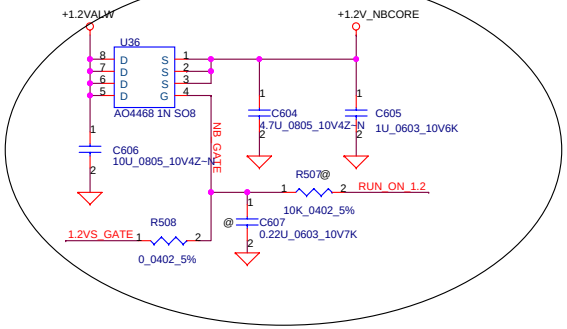

+3VALW TO +3V

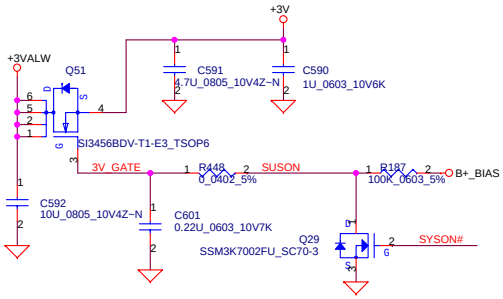

+3VALW TO +3VS

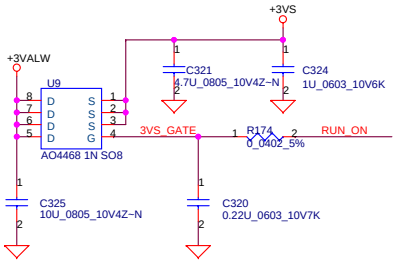

+1.2VALW TO +1.2V_HT

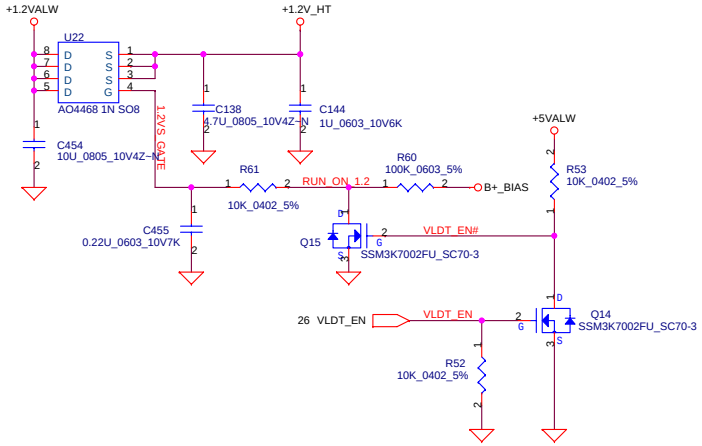

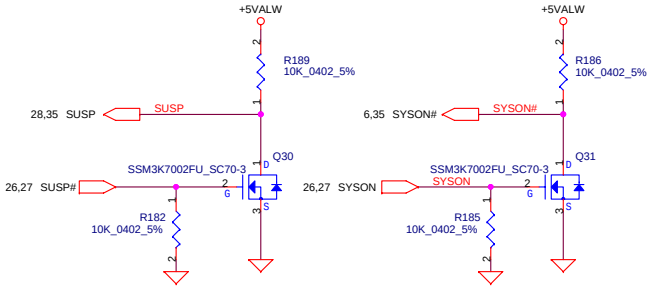

+1.8V TO +1.8VS

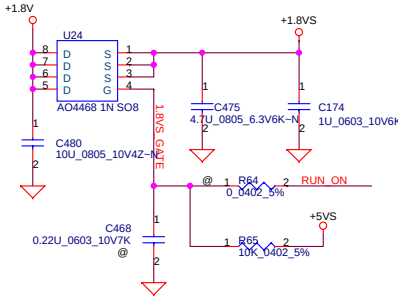

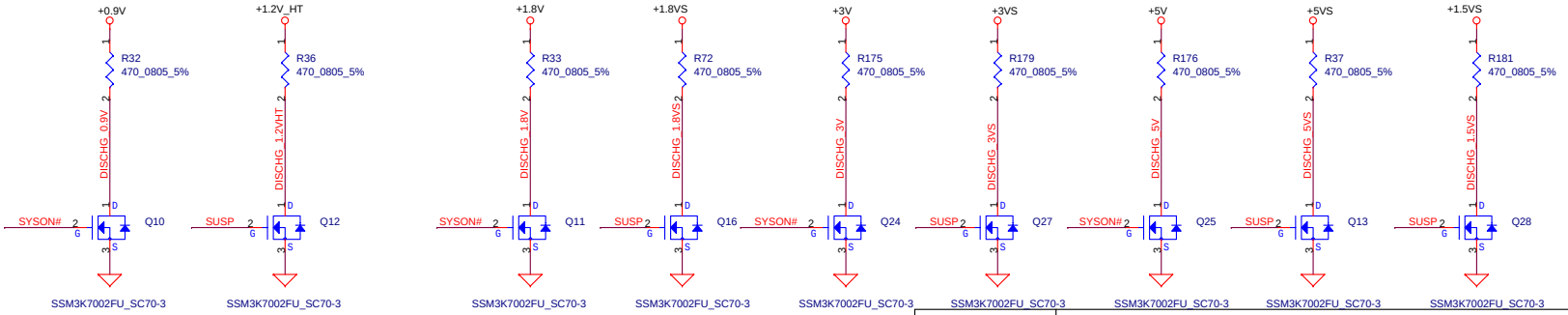

Security Classification	Compal Secret Data		
Issued Date	2007/1/25	Deciphered Date	2008/01/25

THIS SHEET OF ENGINEERING DRAWING IS THE PROPRIETARY PROPERTY OF COMPAL ELECTRONICS, INC. AND CONTAINS CONFIDENTIAL AND TRADE SECRET INFORMATION. THIS SHEET MAY NOT BE TRANSFERRED FROM THE CUSTODY OF THE COMPETENT DIVISION OF R&D DEPARTMENT EXCEPT AS AUTHORIZED BY COMPAL ELECTRONICS, INC. NEITHER THIS SHEET NOR THE INFORMATION IT CONTAINS MAY BE USED BY OR DISCLOSED TO ANY THIRD PARTY WITHOUT PRIOR WRITTEN CONSENT OF COMPAL ELECTRONICS, INC.

Title: **DC Interface**

Size: Custom | Document Number: **LA-3611P** | Rev: 0.4

Date: Wednesday, April 11, 2007 | Sheet 30 of 40

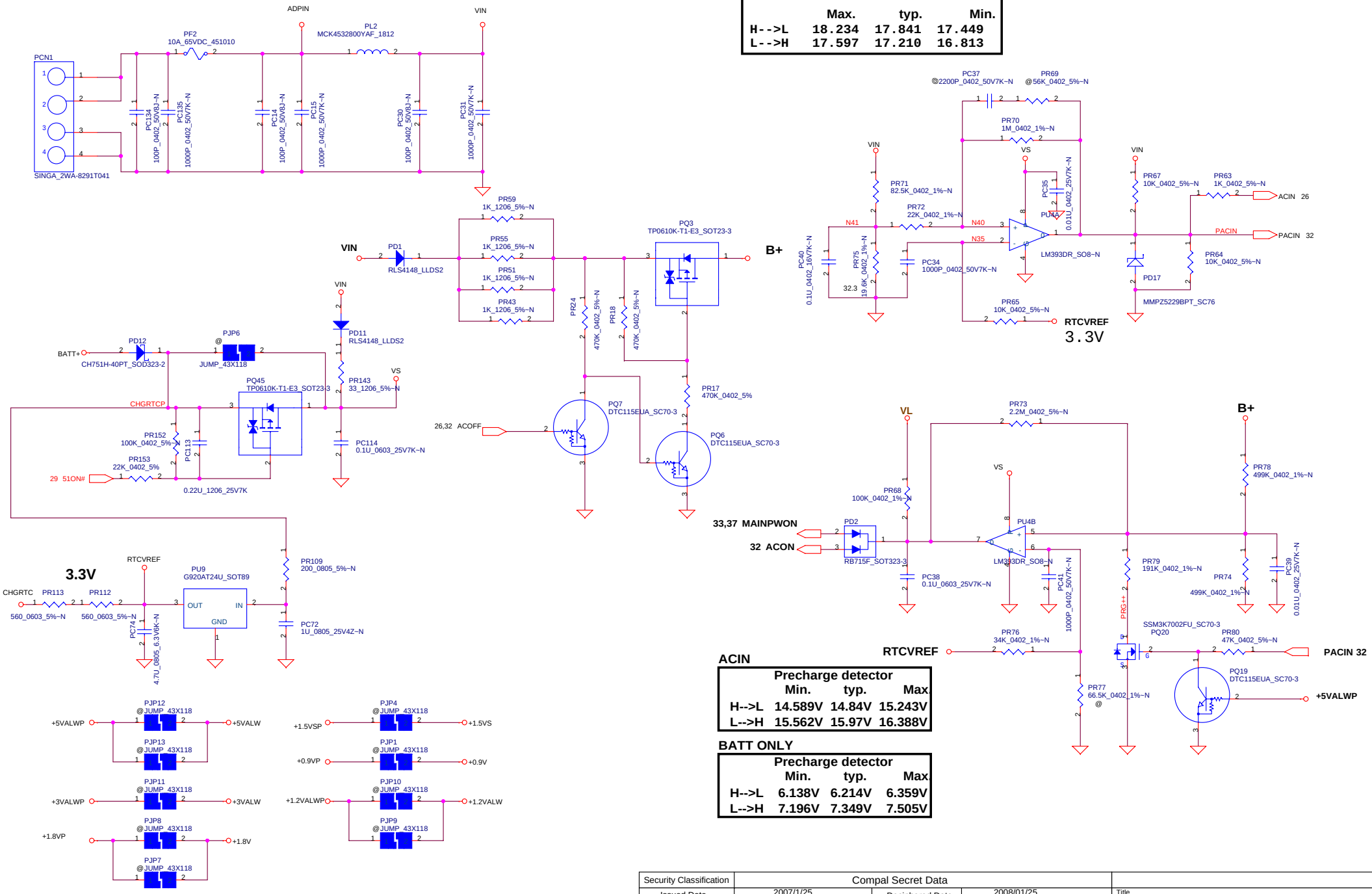

Vin Detector

	Max.	typ.	Min.
H-->L	18.234	17.841	17.449
L-->H	17.597	17.210	16.813

ACIN

Precharge detector	Min.	typ.	Max
H-->L	14.589V	14.84V	15.243V
L-->H	15.562V	15.97V	16.388V

BATT ONLY

Precharge detector	Min.	typ.	Max
H-->L	6.138V	6.214V	6.359V
L-->H	7.196V	7.349V	7.505V

Security Classification	Compal Secret Data		
Issued Date	2007/1/25	Deciphered Date	2008/01/25

THIS SHEET OF ENGINEERING DRAWING IS THE PROPRIETARY PROPERTY OF COMPAL ELECTRONICS, INC. AND CONTAINS CONFIDENTIAL AND TRADE SECRET INFORMATION. THIS SHEET MAY NOT BE TRANSFERED FROM THE CUSTODY OF THE COMPETENT DIVISION OF R&D DEPARTMENT EXCEPT AS AUTHORIZED BY COMPAL ELECTRONICS, INC. NEITHER THIS SHEET NOR THE INFORMATION IT CONTAINS MAY BE USED BY OR DISCLOSED TO ANY THIRD PARTY WITHOUT PRIOR WRITTEN CONSENT OF COMPAL ELECTRONICS, INC.

Title: **DCIN / Precharge**

Size: Custom | Document Number: **LA-3611P** | Rev: 0.4

Date: Wednesday, April 11, 2007 | Sheet 31 of 40

Charger

Iadp=0~3.95A(75W)

Fosc=14100/Rt=14100/47=300KHz

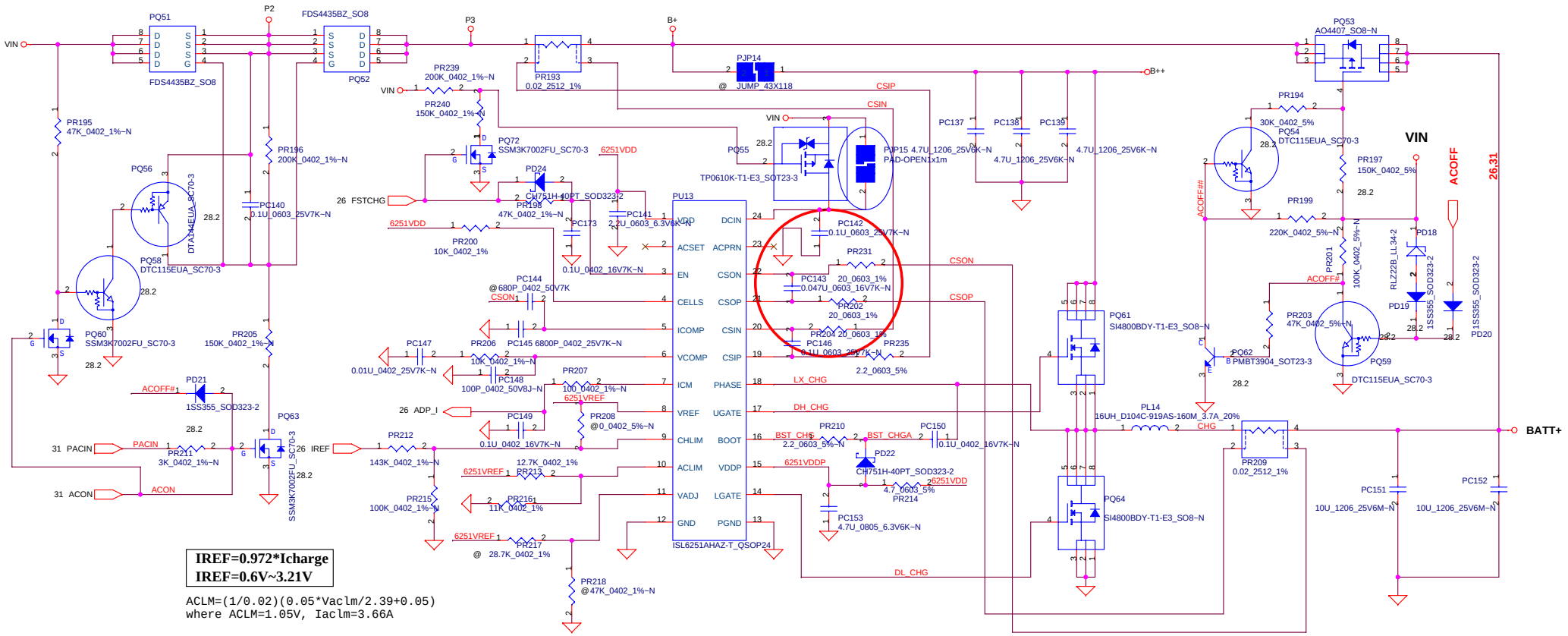

IREF=0.972*Icharge
IREF=0.6V~3.21V

ACLM=(1/0.02)(0.05*Vaclm/2.39+0.05)
where ACLM=1.05V, Iaclm=3.66A

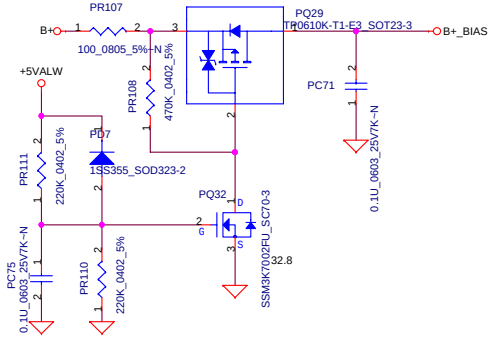

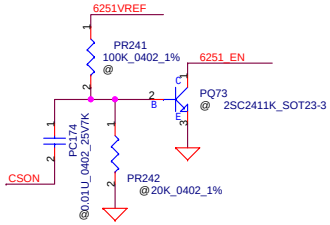

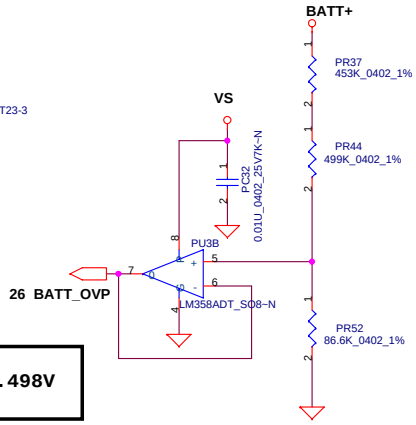

LI-4S :18V----BATT-OVP=1.498V

Security Classification	Compal Secret Data		
Issued Date	2007/1/25	Deciphered Date	2008/01/25

THIS SHEET OF ENGINEERING DRAWING IS THE PROPRIETARY PROPERTY OF COMPAL ELECTRONICS, INC. AND CONTAINS CONFIDENTIAL AND TRADE SECRET INFORMATION. THIS SHEET MAY NOT BE TRANSFERED FROM THE CUSTODY OF THE COMPETENT DIVISION OF R&D DEPARTMENT EXCEPT AS AUTHORIZED BY COMPAL ELECTRONICS, INC. NEITHER THIS SHEET NOR THE INFORMATION IT CONTAINS MAY BE USED BY OR DISCLOSED TO ANY THIRD PARTY WITHOUT PRIOR WRITTEN CONSENT OF COMPAL ELECTRONICS, INC.

Compal Electronics, Inc.

Title: **PWR-Charger**

Size: B | Document Number: **LA-3611P** | Rev: 0.4

Date: Wednesday, April 11, 2007 | Sheet 32 of 40

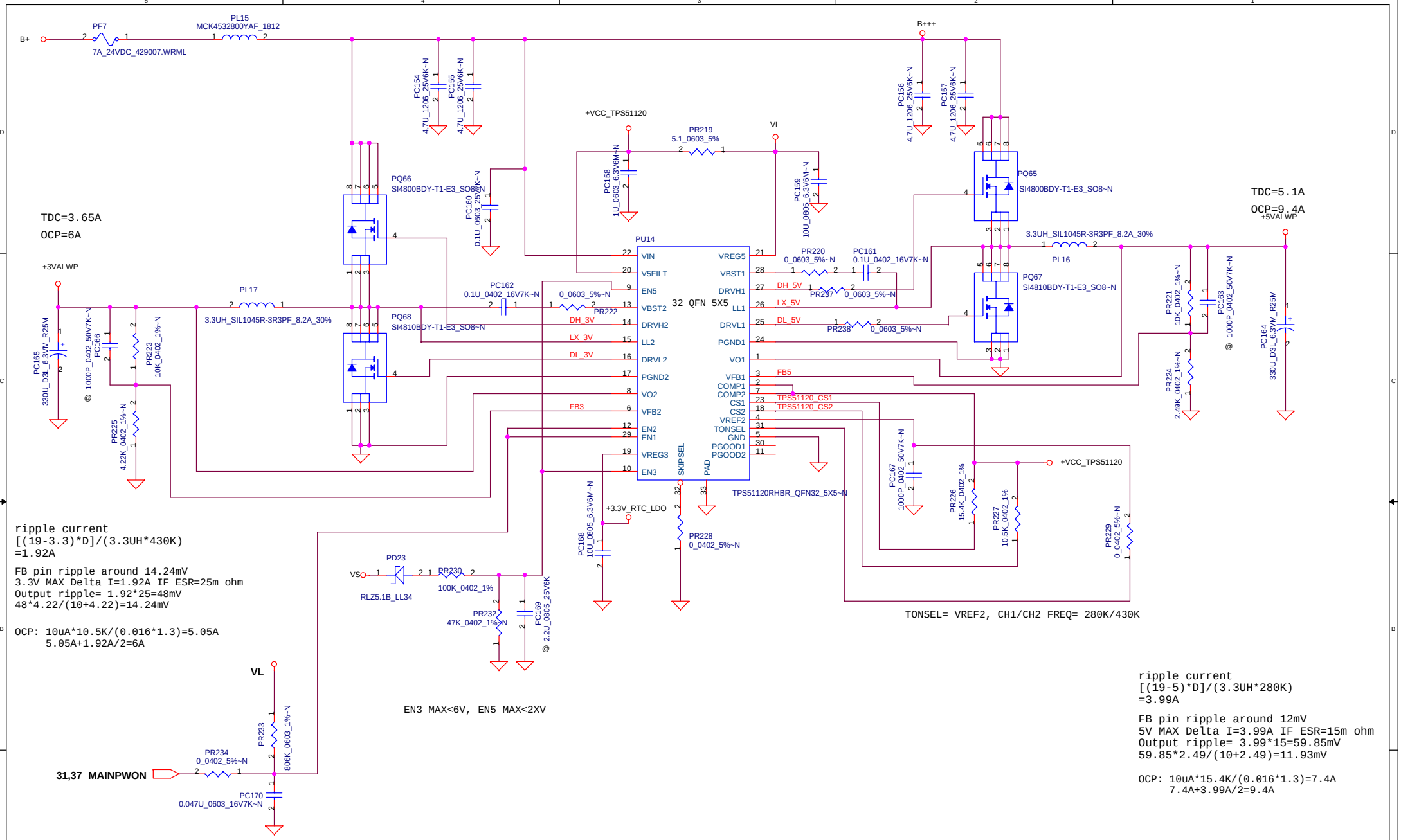

ripple current
[(19-3.3)*D]/(3.3UH*430K)
=1.92A

FB pin ripple around 14.24mV
3.3V MAX Delta I=1.92A IF ESR=25m ohm
Output ripple= 1.92*25=48mV
48*4.22/(10+4.22)=14.24mV

OCP: 10uA*10.5K/(0.016*1.3)=5.05A
5.05A+1.92A/2=6A

ripple current
[(19-5)*D]/(3.3UH*280K)
=3.99A

FB pin ripple around 12mV
5V MAX Delta I=3.99A IF ESR=15m ohm
Output ripple= 3.99*15=59.85mV
59.85*2.49/(10+2.49)=11.93mV

OCP: 10uA*15.4K/(0.016*1.3)=7.4A
7.4A+3.99A/2=9.4A

Because EN1 and EN2 have 2uA sorce current,
the RC time will be change.

Security Classification	Compal Secret Data		
Issued Date	2007/1/25	Deciphered Date	2008/01/25

THIS SHEET OF ENGINEERING DRAWING IS THE PROPRIETARY PROPERTY OF COMPAL ELECTRONICS, INC. AND CONTAINS CONFIDENTIAL AND TRADE SECRET INFORMATION. THIS SHEET MAY NOT BE TRANSFERED FROM THE CUSTODY OF THE COMPETENT DIVISION OF R&D DEPARTMENT EXCEPT AS AUTHORIZED BY COMPAL ELECTRONICS, INC. NEITHER THIS SHEET NOR THE INFORMATION IT CONTAINS MAY BE USED BY OR DISCLOSED TO ANY THIRD PARTY WITHOUT PRIOR WRITTEN CONSENT OF COMPAL ELECTRONICS, INC.

Compal Electronics, Inc.

Title: +3VALWP, +5VALWP

Size: Custom | Document Number: LA-3611P | Rev: 0.4

Date: Wednesday, April 11, 2007 | Sheet 33 of 40

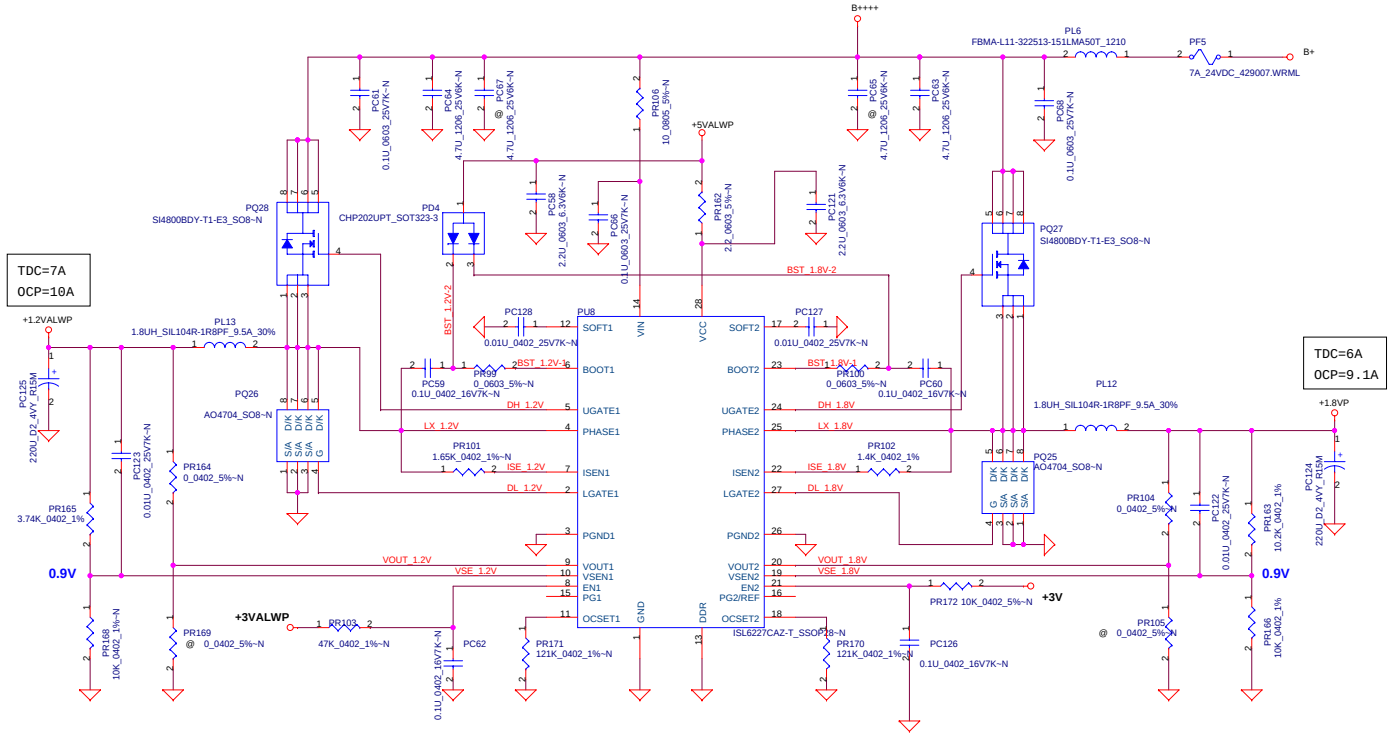

Security Classification	Compal Secret Data		
Issued Date	2007/1/25	Deciphered Date	2008/01/25

THIS SHEET OF ENGINEERING DRAWING IS THE PROPRIETARY PROPERTY OF COMPAL ELECTRONICS, INC. AND CONTAINS CONFIDENTIAL AND TRADE SECRET INFORMATION. THIS SHEET MAY NOT BE TRANSFERED FROM THE CUSTODY OF THE COMPETENT DIVISION OF R&D DEPARTMENT EXCEPT AS AUTHORIZED BY COMPAL ELECTRONICS, INC. NEITHER THIS SHEET NOR THE INFORMATION IT CONTAINS MAY BE USED BY OR DISCLOSED TO ANY THIRD PARTY WITHOUT PRIOR WRITTEN CONSENT OF COMPAL ELECTRONICS, INC.

Compal Electronics, Inc.

Title: **+1.2VALWP & +1.8VP**

Size | Document Number: **LA-3611P** | Rev: 0.4

Date: Wednesday, April 11, 2007 | Sheet 34 of 40

+1.5VSP/+0.9VSP

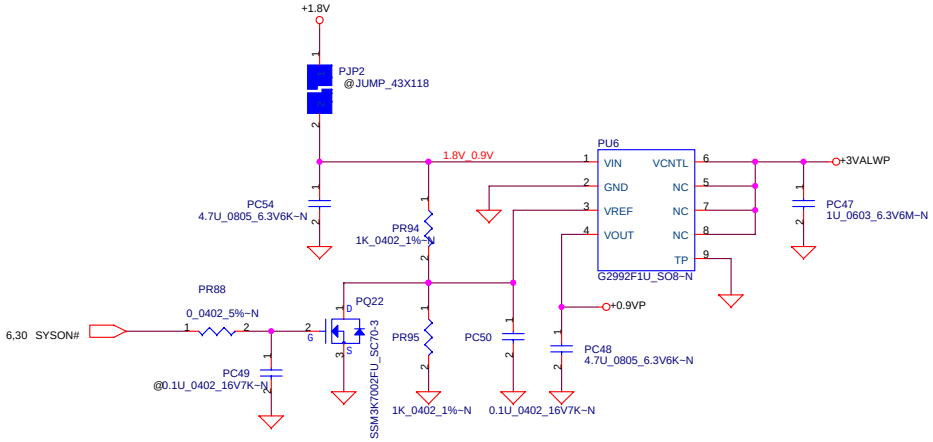

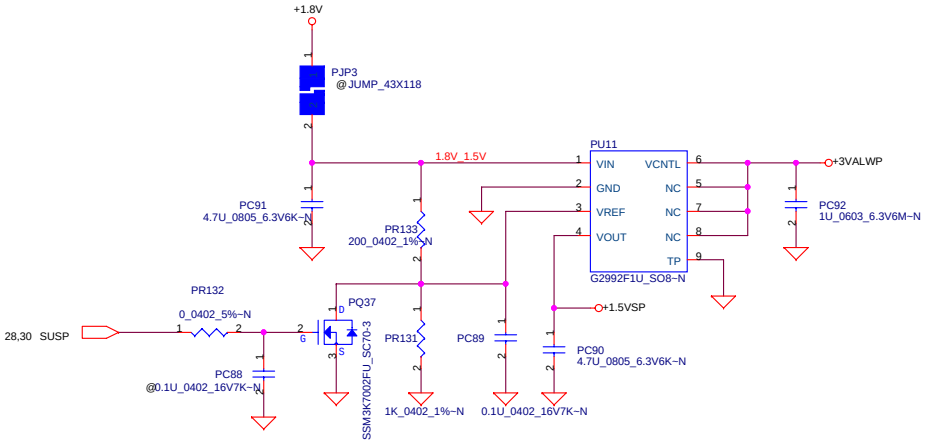

Security Classification	Compal Secret Data		
Issued Date	2007/1/25	Deciphered Date	2008/01/25

THIS SHEET OF ENGINEERING DRAWING IS THE PROPRIETARY PROPERTY OF COMPAL ELECTRONICS, INC. AND CONTAINS CONFIDENTIAL AND TRADE SECRET INFORMATION. THIS SHEET MAY NOT BE TRANSFERED FROM THE CUSTODY OF THE COMPETENT DIVISION OF R&D DEPARTMENT EXCEPT AS AUTHORIZED BY COMPAL ELECTRONICS, INC. NEITHER THIS SHEET NOR THE INFORMATION IT CONTAINS MAY BE USED BY OR DISCLOSED TO ANY THIRD PARTY WITHOUT PRIOR WRITTEN CONSENT OF COMPAL ELECTRONICS, INC.

Title: **+1.5VSP/+0.9VP**

Size	Document Number	Rev
Custom	LA-3611P	0.4

Date: Wednesday, April 11, 2007 | Sheet 35 of 40

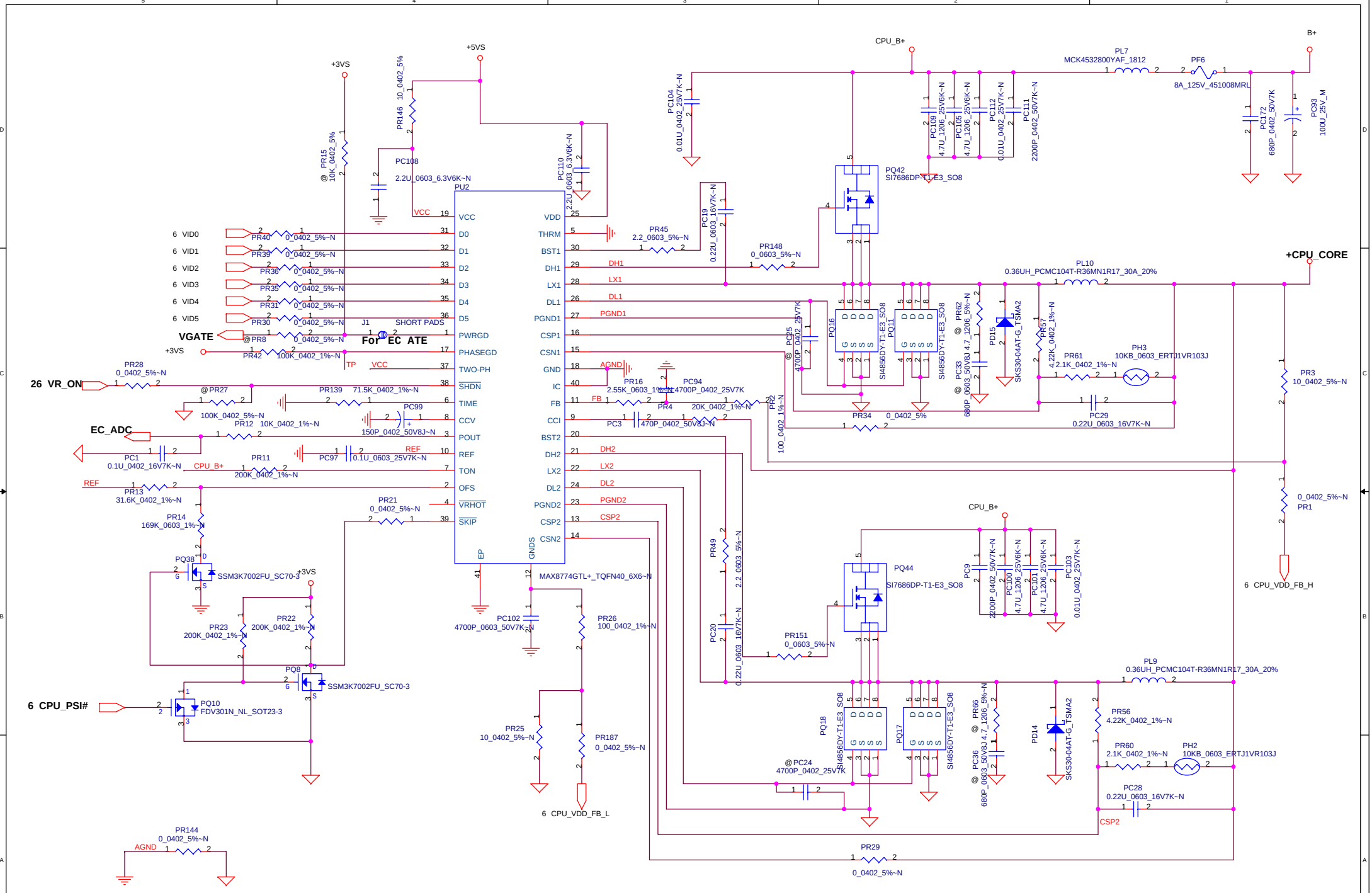

Security Classification	Compal Secret Data		
Issued Date	2007/1/25	Deciphered Date	2008/01/25

THIS SHEET OF ENGINEERING DRAWING IS THE PROPRIETARY PROPERTY OF COMPAL ELECTRONICS, INC. AND CONTAINS CONFIDENTIAL AND TRADE SECRET INFORMATION. THIS SHEET MAY NOT BE TRANSFERED FROM THE CUSTODY OF THE COMPETENT DIVISION OF R&D DEPARTMENT EXCEPT AS AUTHORIZED BY COMPAL ELECTRONICS, INC. NEITHER THIS SHEET NOR THE INFORMATION IT CONTAINS MAY BE USED BY OR DISCLOSED TO ANY THIRD PARTY WITHOUT PRIOR WRITTEN CONSENT OF COMPAL ELECTRONICS, INC.

Title: **+CPU_CORE**

Size: Custom | Document Number: **LA-3611P** | Rev: 0.4

Date: Wednesday, April 11, 2007 | Sheet 36 of 40

Battery Connect/OTP

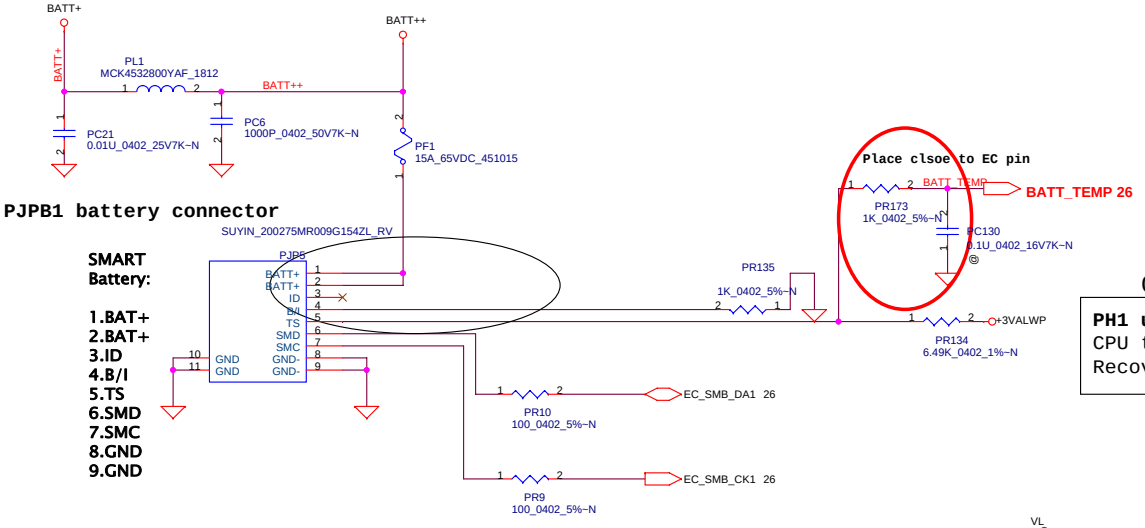

CPU

PH1 under CPU botten side :
CPU thermal protection at 85 degree C
Recovery at 70 degree C

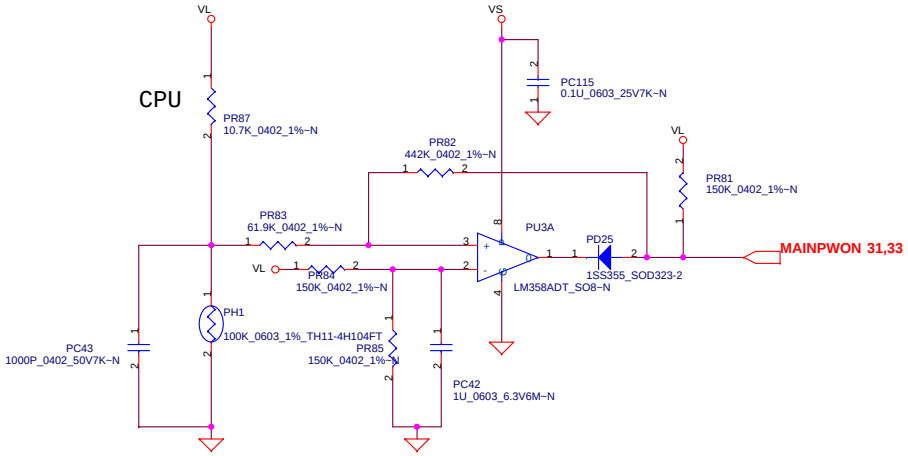

Security Classification	Compal Secret Data		
Issued Date	2007/1/25	Deciphered Date	2008/01/25

THIS SHEET OF ENGINEERING DRAWING IS THE PROPRIETARY PROPERTY OF COMPAL ELECTRONICS, INC. AND CONTAINS CONFIDENTIAL AND TRADE SECRET INFORMATION. THIS SHEET MAY NOT BE TRANSFERED FROM THE CUSTODY OF THE COMPETENT DIVISION OF R&D DEPARTMENT EXCEPT AS AUTHORIZED BY COMPAL ELECTRONICS, INC. NEITHER THIS SHEET NOR THE INFORMATION IT CONTAINS MAY BE USED BY OR DISCLOSED TO ANY THIRD PARTY WITHOUT PRIOR WRITTEN CONSENT OF COMPAL ELECTRONICS, INC.

Title: **BATTERY CONN**

Size	Document Number	Rev
Custom	LA-3611P	0.4

Date: Wednesday, April 11, 2007 | Sheet 37 of 40

Version Change List (P. I. R. List) Page 1

Item	Page#	Title	Date	Request Owner	Issue Description	Solution Description	Rev.
1	1	PWR-CHARGER	03/02	Compal	in order to slove battery plug in opposite make M/B damaged issue.	Add PR231 to 20ohm PR235 to 2.2 ohm PC142 pin1 to GND,PC143 0.1uF to 0.047uF, PR202 2.2ohm to 20ohm,PR204 18ohm to 20 ohm	0.1
2				Compal			0.1
3				Compal			0.1
4				Compal			0.2
5				Compal			0.3
6				Compal			0.3
7				Compal			0.3
8				Compal			0.3
10				Compal			0.4
11				Compal			0.4
12				Compal			0.4
13				Compal			0.4
14				Compal			0.5
15				Compal			0.5
16				Compal			0.6
17				Compal			

Next: PR238, PC202, PQ56, PD42, PJP21

THIS SHEET OF ENGINEERING DRAWING IS THE PROPRIETARY PROPERTY OF COMPAL ELECTRONICS, INC. AND CONTAINS CONFIDENTIAL AND TRADE SECRET INFORMATION. THIS SHEET MAY NOT BE TRANSFERED FROM THE CUSTODY OF THE COMPETENT DIVISION OF R&D DEPARTMENT EXCEPT AS AUTHORIZED BY COMPAL ELECTRONICS, INC. NEITHER THIS SHEET NOR THE INFORMATION IT CONTAINS MAY BE USED BY OR DISCLOSED TO ANY THIRD PARTY WITHOUT PRIOR WRITTEN CONSENT OF COMPAL ELECTRONICS, INC.

Compal Electronics, Inc.

Title: **EE-PIR**

Size: Document Number: **LA-3611P** Rev: 0.4

Date: Wednesday, April 11, 2007 Sheet 38 of 40

Version change list (P.I.R. List)

Item	Fixed Issue	Reason for change	Rev.	PG#	Modify List
1	EC can't boot by SPI	TP_SPI must pull down	0.3	26	Add R473
2	Can't wake on LAN	Isolate pin must pull high to +3VS	0.3	22	R210 connect to +3VS
3		Improve stable power for NB core	0.3	30	Add U36(+1.2V_NBCORE Control circuit)
4		ME/ID request	0.3	21	Change Media Card Conn
5	WLAN LED abnormal	Reverse LED_WLAN# signal	0.3	25	Add R506 and R511
6	New Card Can't Identified Issue	SB need check CPPE# and CPUSB# signal	0.3	16	New Card CPPE# and CPUSB# connect to U600.B4 (GEVENT6)
7		NECP request	0.4	16	only CPPE# of New Card connect to SB
8		WLAN LED always lighting if not install WLAN CARD	0.4	25	R180 pull high to +3VS
9		ME and ID request	0.4	29	Change JLED1 connertor to 14pin
10		NECP Audio Team request	0.4	23	Change R270 to 23.7K ohm
11					
12					
13					
14					
15					
16					
17					
18					
19					
20					
21					
22					
23					
24					
25					
26					

Security Classification: Compal Secret Data
Issued Date: 2007/1/25 Deciphered Date: 2008/01/25

THIS SHEET OF ENGINEERING DRAWING IS THE PROPRIETARY PROPERTY OF COMPAL ELECTRONICS, INC. AND CONTAINS CONFIDENTIAL AND TRADE SECRET INFORMATION. THIS SHEET MAY NOT BE TRANSFERED FROM THE CUSTODY OF THE COMPETENT DIVISION OF R&D DEPARTMENT EXCEPT AS AUTHORIZED BY COMPAL ELECTRONICS, INC. NEITHER THIS SHEET NOR THE INFORMATION IT CONTAINS MAY BE USED BY OR DISCLOSED TO ANY THIRD PARTY WITHOUT PRIOR WRITTEN CONSENT OF COMPAL ELECTRONICS, INC.

Title: PIR (HW)
Size: Custom | Document Number: LA-3611P | Rev: 0.4
Date: Wednesday, April 11, 2007 | Sheet 39 of 40

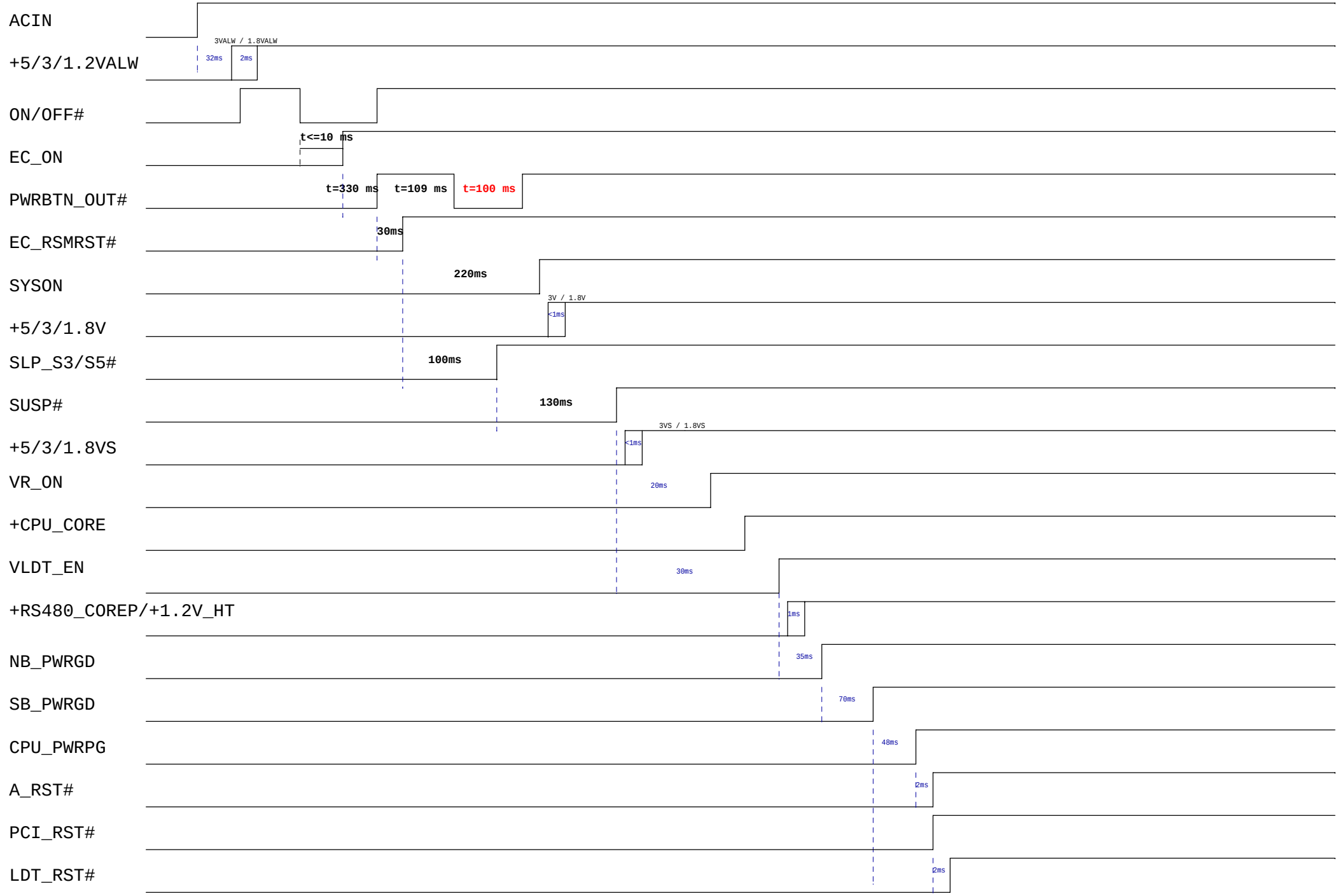

Security Classification	Compal Secret Data		
Issued Date	2007/1/25	Deciphered Date	2008/01/25

THIS SHEET OF ENGINEERING DRAWING IS THE PROPRIETARY PROPERTY OF COMPAL ELECTRONICS, INC. AND CONTAINS CONFIDENTIAL AND TRADE SECRET INFORMATION. THIS SHEET MAY NOT BE TRANSFERED FROM THE CUSTODY OF THE COMPETENT DIVISION OF R&D DEPARTMENT EXCEPT AS AUTHORIZED BY COMPAL ELECTRONICS, INC. NEITHER THIS SHEET NOR THE INFORMATION IT CONTAINS MAY BE USED BY OR DISCLOSED TO ANY THIRD PARTY WITHOUT PRIOR WRITTEN CONSENT OF COMPAL ELECTRONICS, INC.

Compal Electronics, Inc.

Title: **Power Sequence**

Size | Document Number: **LA-3611P** | Rev: 0.4

Date: Wednesday, April 11, 2007 | Sheet 40 of 40