System Block Diagram

Sheet 1 of 46
System Block Diagram

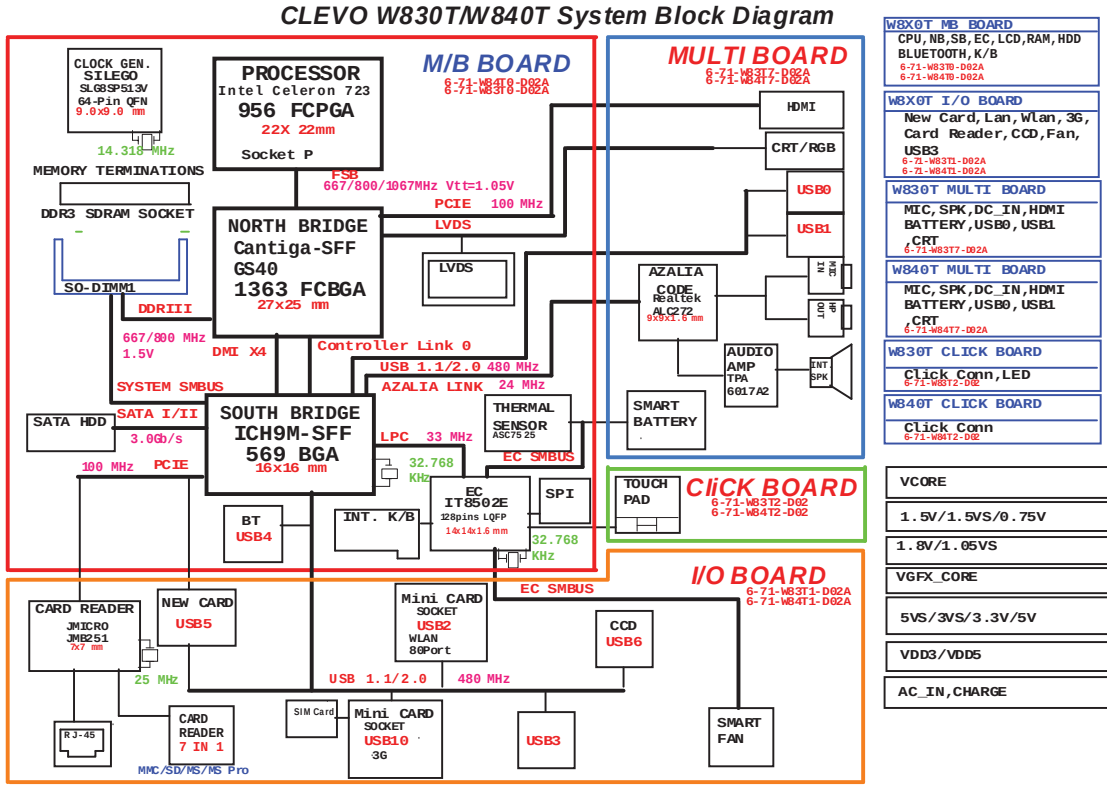

http://hobi-elektronika.net

Clock Generator

CLOCK GENERATOR

Sheet 2 of 46
Clock Generator

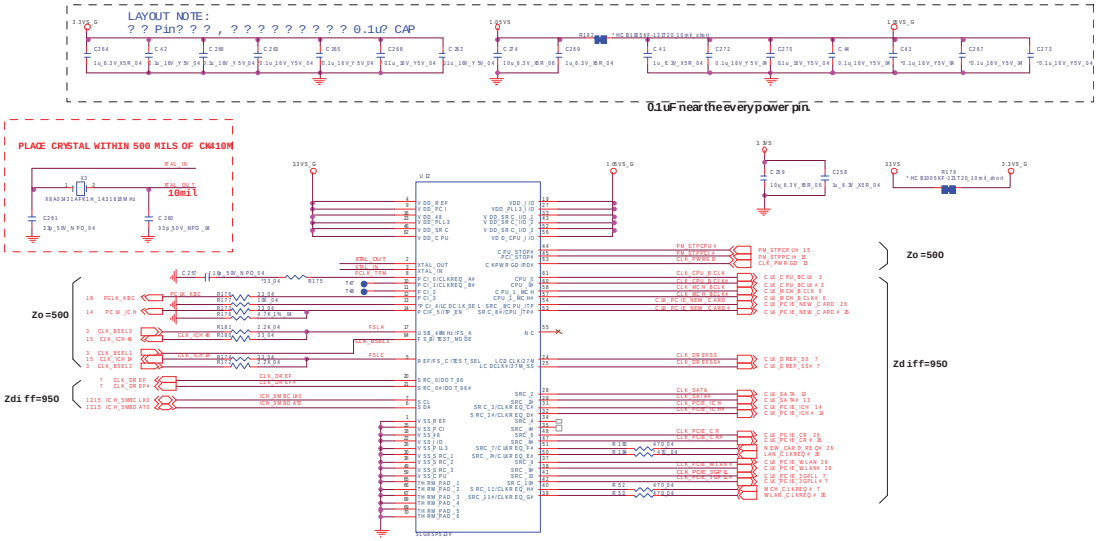

FSLC	FSLB	FSLA	CKS95	
BSEL2	BSEL1	BSEL0	Host Clock Frequency	
0	0	0	266 MHz	1066 MHz
0	1	0	200 MHz	800 MHz
0	1	1	166 MHz	667 MHz

Pin54/53	Pin28/29	Pin31/32	Pin34/35	Pin48/47	Pin37/38	Pin41/42
SRC8	SRC2	SRC3	SRC4	SRC6	SRC9	SRC10
NEW_CARD	CLK_SATA#	PCIE_ICH	PCIE_GLAN	PCIE_CR	PCIE_WLAN	PCIE_3GPLL
Pin51				Pin50	Pin89	Pin40
CR#_F				CR#_E	CR#_G	CR#_H
NEW_CARD_REQ#				LAN_CLKREQ#	WLAN_CLKREQ#	MCH_CLK_REQ

http://hobi-elektronika.net

Penryn SFF 1/3

Sheet 3 of 46
Penryn SFF 1/3

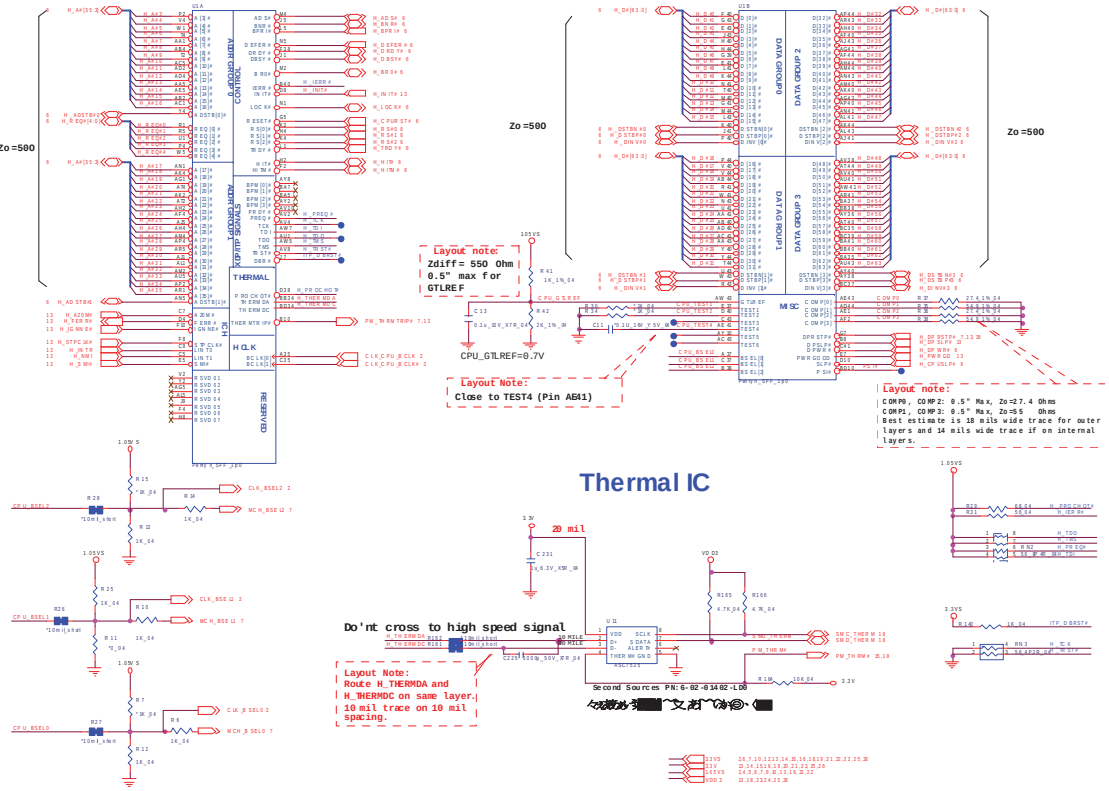

http://hobi-elektronika.net

Penryn SFF 2/3

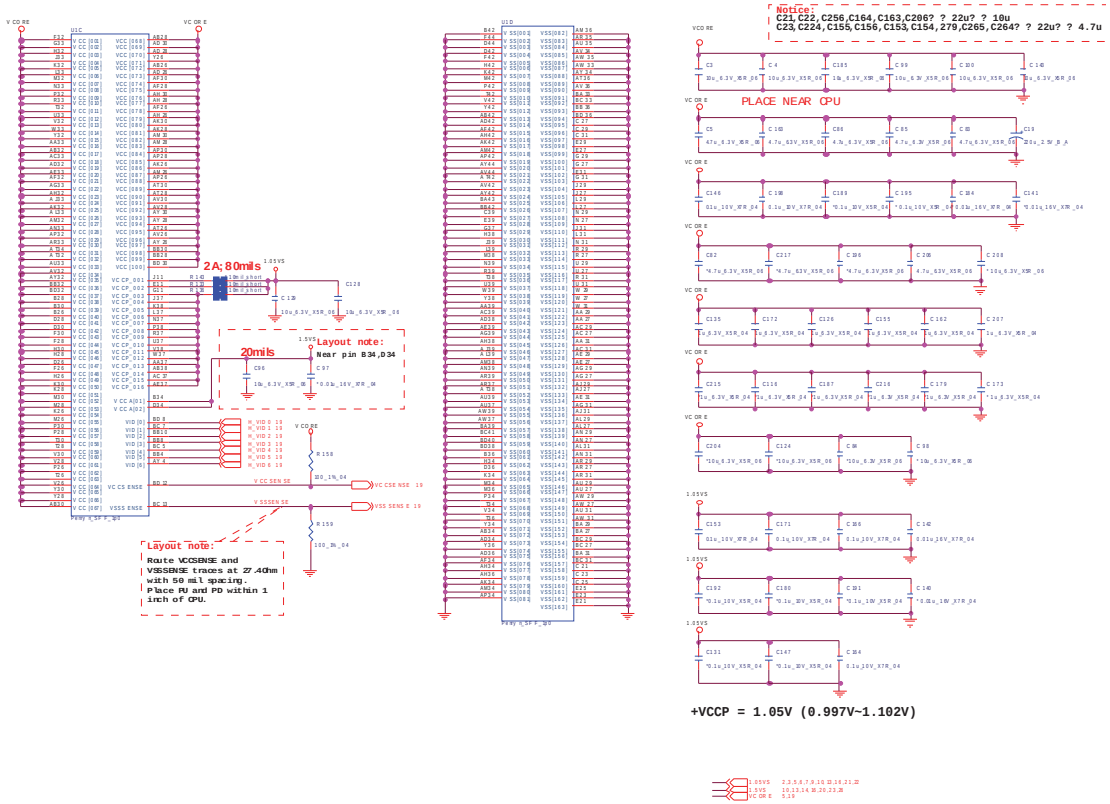

Sheet 4 of 46
Penryn SFF 2/3

http://hobi-elektronika.net

Penryn SFF 3/3

Sheet 5 of 46
Penryn SFF 3/3

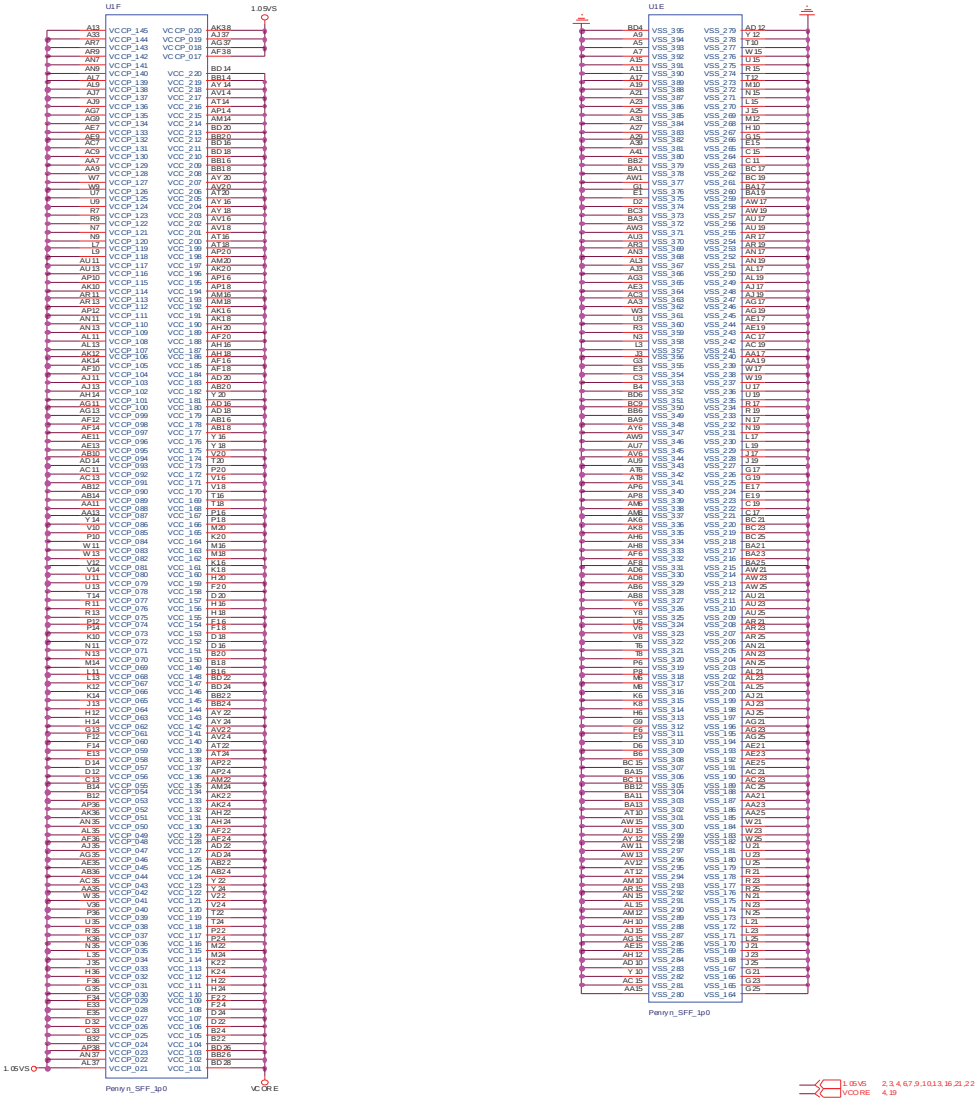

http://hobi-elektronika.net

Cantiga SFF 1/6, PEG

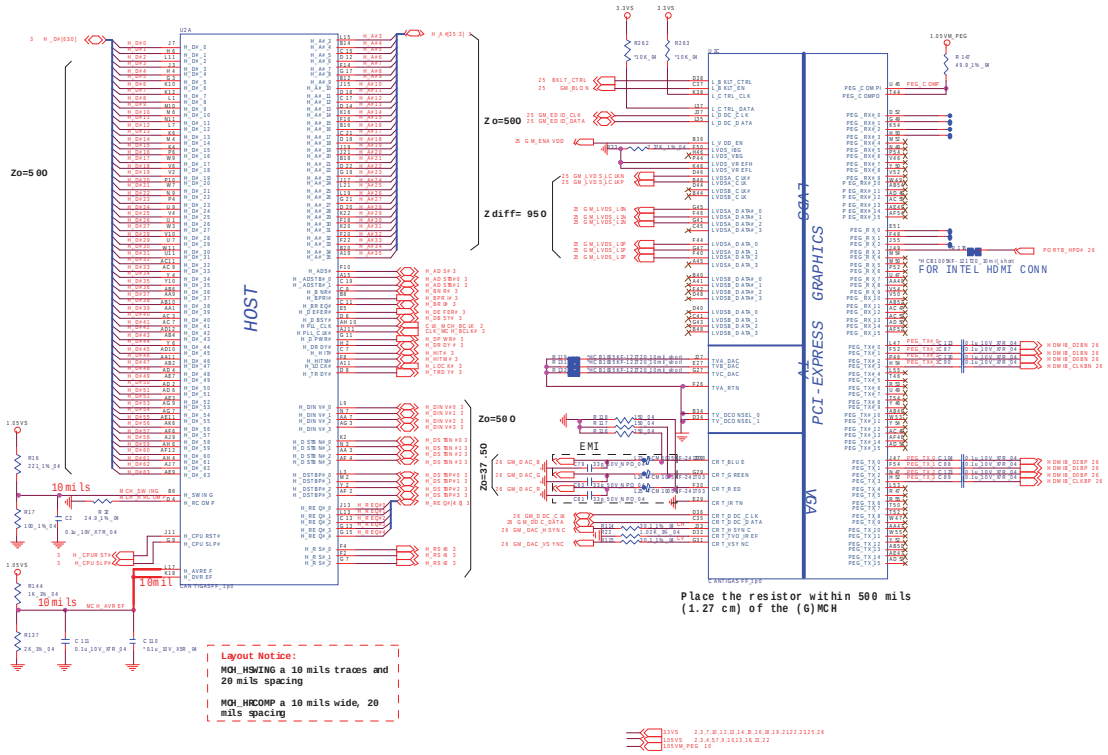

Sheet 6 of 46
Cantiga SFF 1/6, PEG

http://hobi-elektronika.net

Cantiga SFF 2/6, CLK

Sheet 7 of 46
Cantiga SFF 2/6, CLK

Pin Name	Strap Description	Configuration
CFG[2:0]	FSB Frequency	000 = 1066 010 = 800 011 = 667 Others = Reserved
CFG[4:3]	Reserved	
CFG[5]	DMI x2 Select	low = DMI x2 (Default) High = DMI x4 (Default)
CFG[6]	Integrated Trusted Platform Module (iTPM) Host Interface	low = The iTPM Host Interface is enabled High = Disabled (Default)
CFG[7]	Intel Management Engine Crypto Strap	low = Intel Management Engine Crypto Transport Layer Security (TLS) cipher suite with no confidentiality High = Intel Management Engine Crypto TLS cipher suite with confidentiality (default)
CFG[8]	Reserved	
CFG[9]	PCIe Graphics Lane	low = Reverse Lanes, 15->0, 14->1etc High = Normal operation (default) : Lane Numbered in Order
CFG[10]	PCIe Loopback enable	low = Enabled High = Disabled (default)
CFG[11]	Reserved	
CFG[12]	ALLZ	low = ALLZ mode enabled High = Disabled (default)
CFG[13]	XOR	low = XOR mode enabled High = Disabled (default)
CFG[15:14]	Reserved	
CFG[16]	FSB Dynamic ODT	low = Dynamic ODT Disabled High = Dynamic ODT enabled (default)
CFG[18:17]	Reserved	
CFG[19]	DMI Lane Reversal	Low = Normal operation (Default) : Lane Numbered in Order High = Reverse lanes DMI x4 mode ((G) MCH->CH): (3->0, 2->1, 1->2 and 0->3) DMI x2 mode ((G) MCH->CH): (3->0, 2->1)
CFG[20]	Digital Display Port (SDVO/DP/HDMI) Concurrent with PCIe	Low = Only digital display port (SDVO/DP/HDMI) or PCIe is operational (default) High = Digital display port (SDVO/DP/HDMI) and PCIe are operating simultaneously via the PEG port

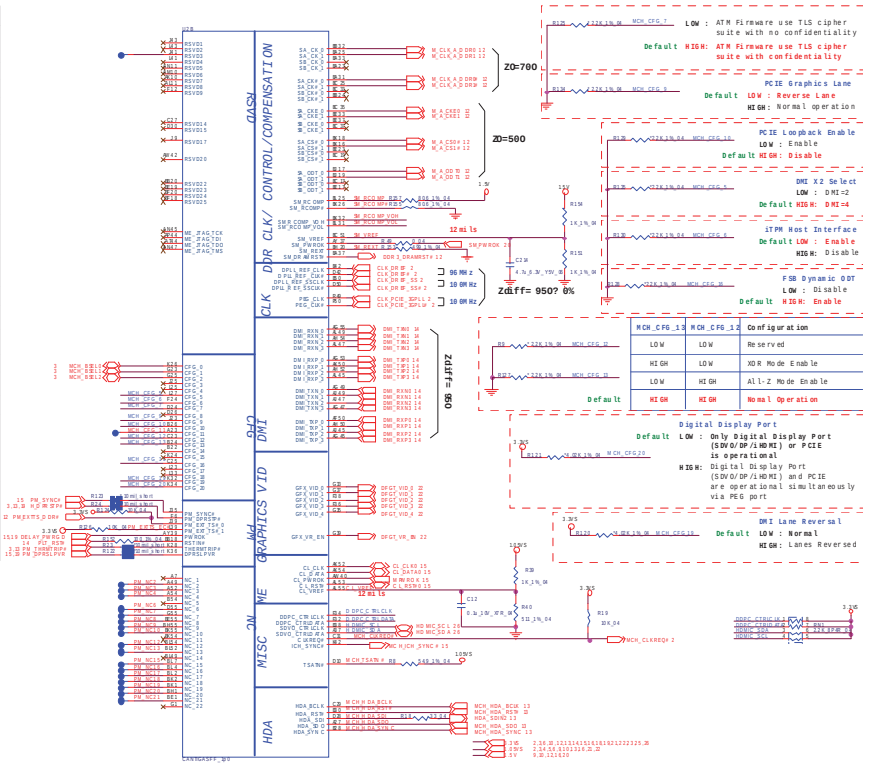

http://hobi-elektronika.net

Cantiga SFF 3/6, DDR

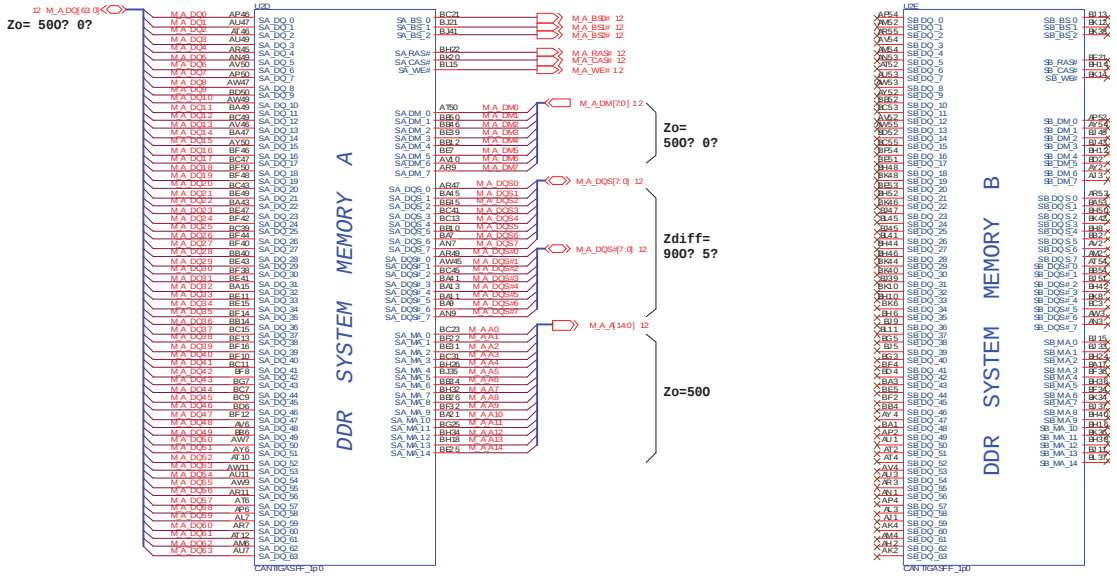

Sheet 8 of 46
Cantiga SFF 3/6, DDR

http://hobi-elektronika.net

Cantiga SFF 4/6, Power 1

Sheet 9 of 46
Cantiga SFF 4/6, Power 1

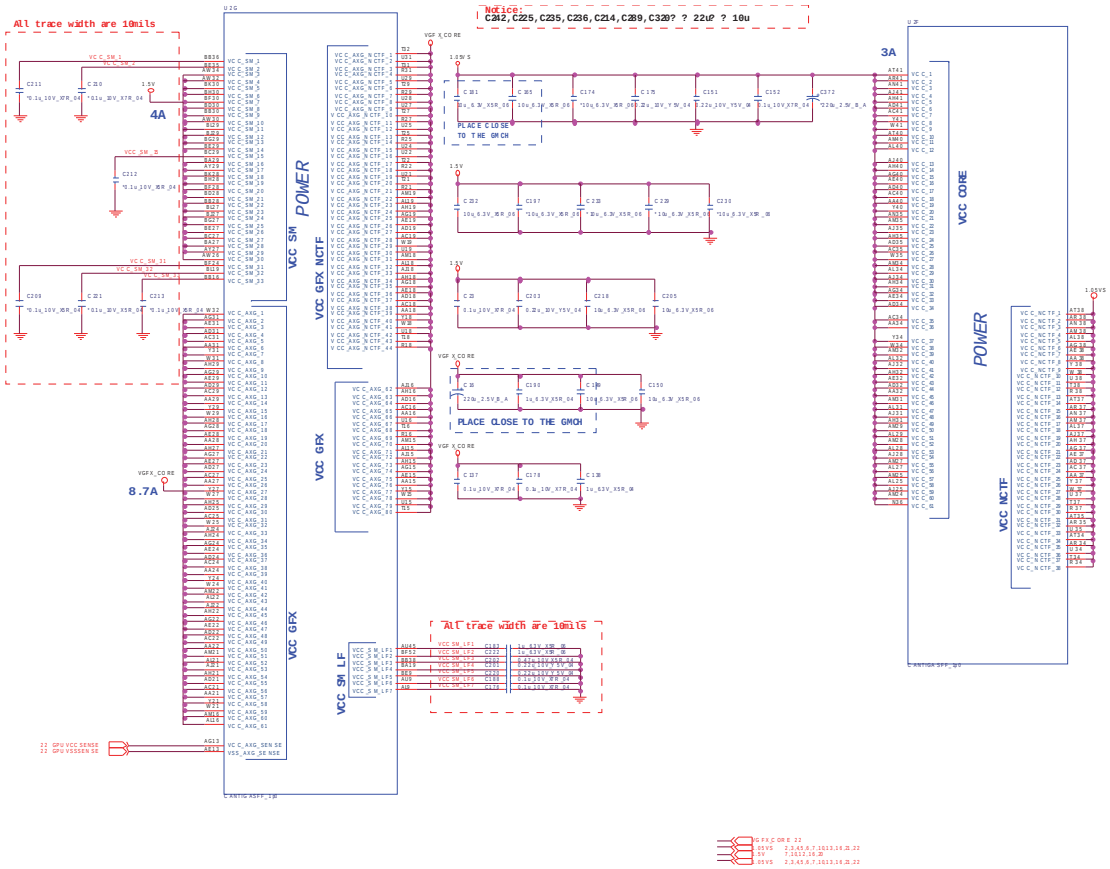

http://hobi-elektronika.net

Cantiga SFF 5/6, Power 2

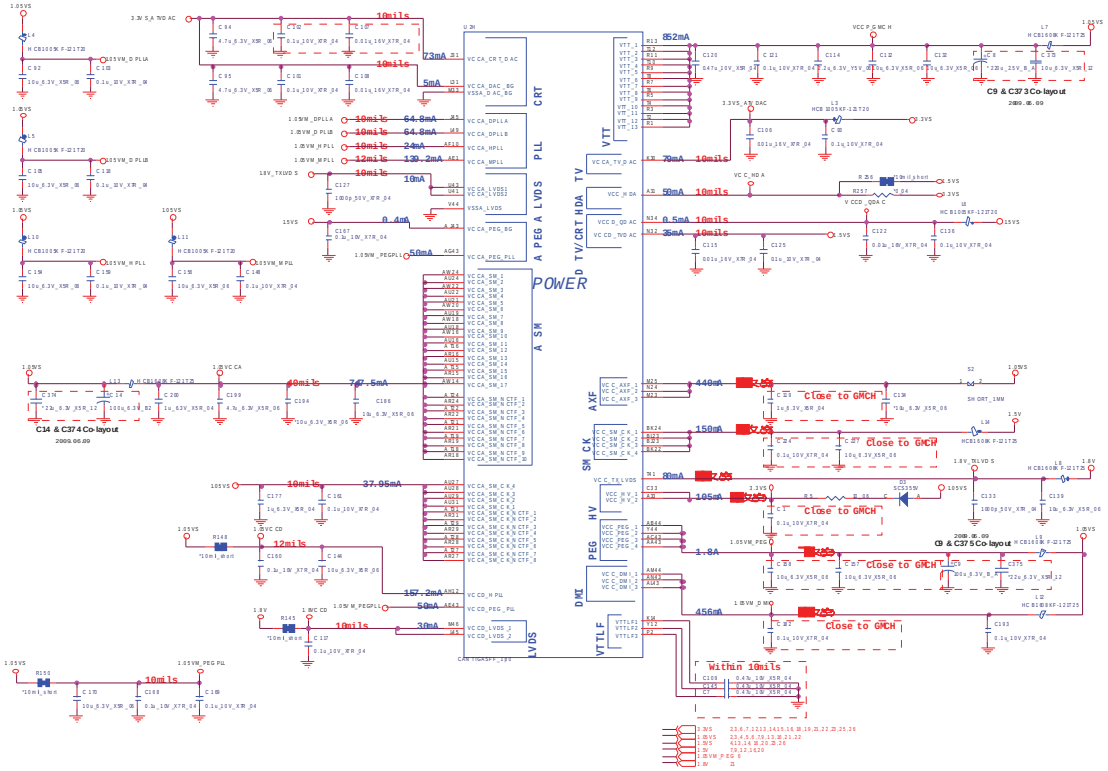

Sheet 10 of 46
Cantiga SFF 5/6,
Power 2

http://hobi-elektronika.net

Cantiga SFF 6/6, GND

Sheet 11 of 46
Cantiga SFF 6/6, GND

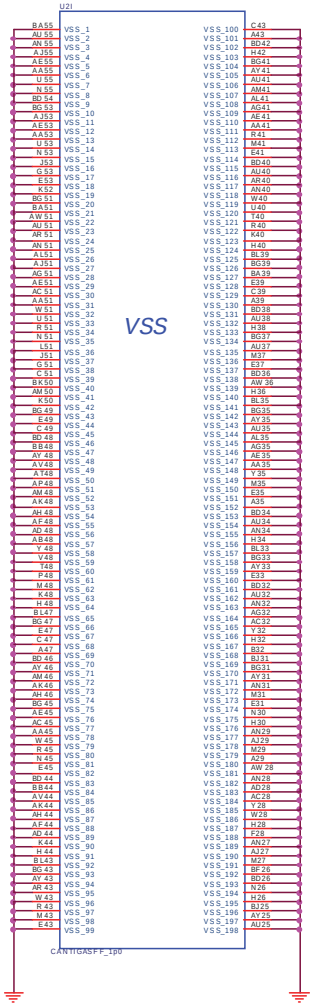

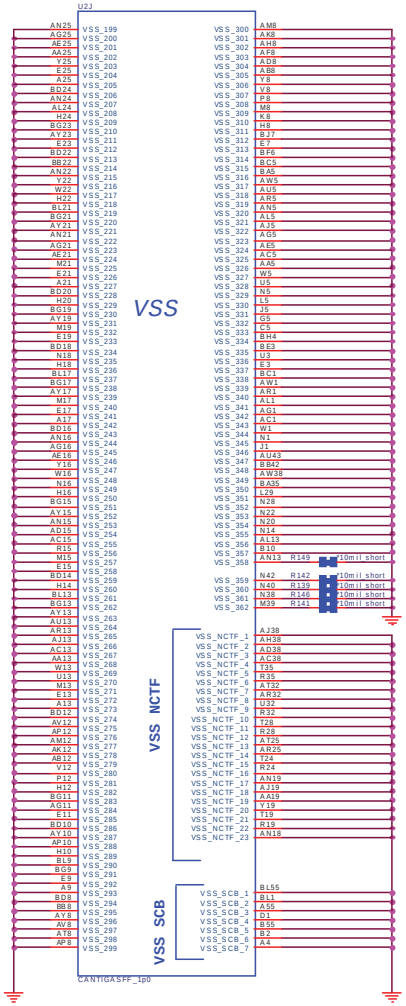

http://hobi-elektronika.net

DDR3 So-DIMM_0

SO-DIMM 0

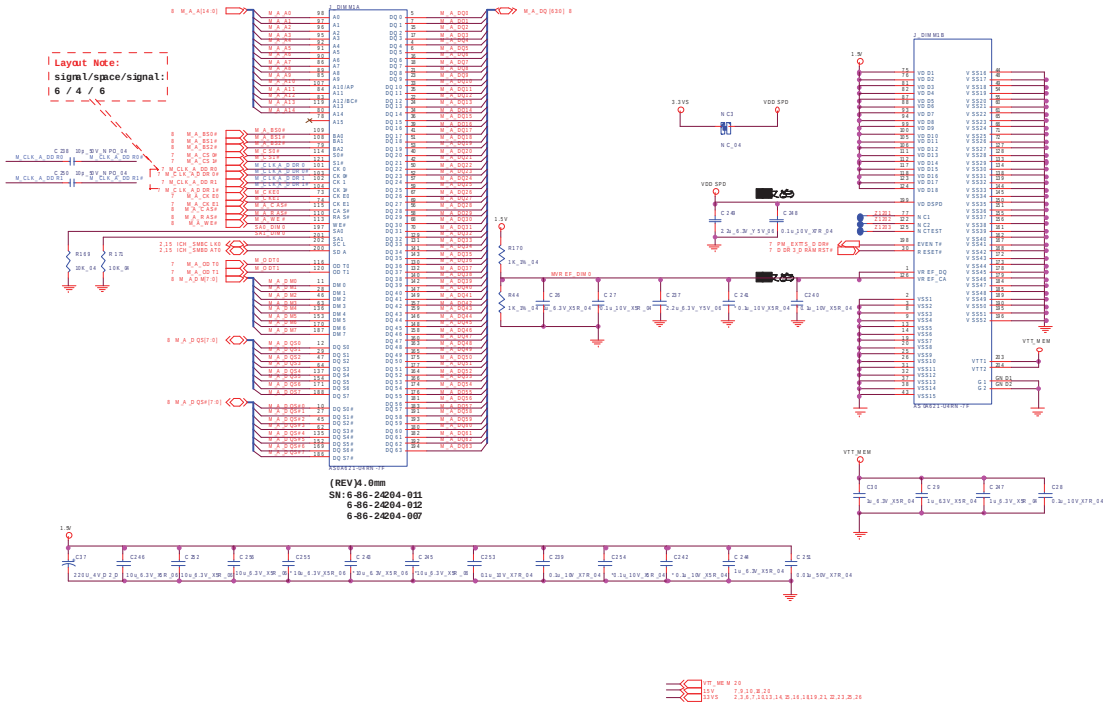

Sheet 12 of 46
DDR3 So-DIMM_0

http://hobi-elektronika.net

ICH9-M SFF 1/5, SATA, HDD CON

Sheet 13 of 46
ICH9-M SFF 1/5, SATA, HDD CON

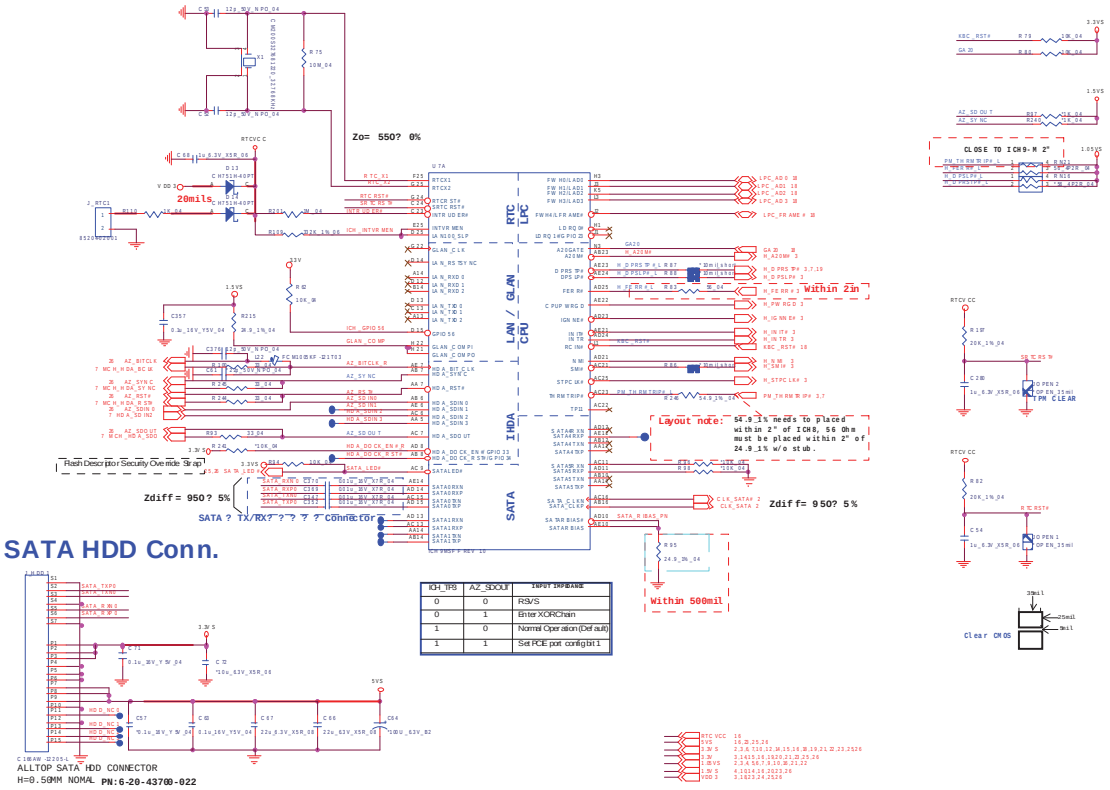

ICH_TP3	AZ_SDOUT	INPUT IMPEDANCE
0	0	RSVS
0	1	Enter XORChain
1	0	Normal Operation (Default)
1	1	Set PCIE port configbit 1

http://hobi-elektronika.net

ICH9-M SFF 2/5, PCI, USB

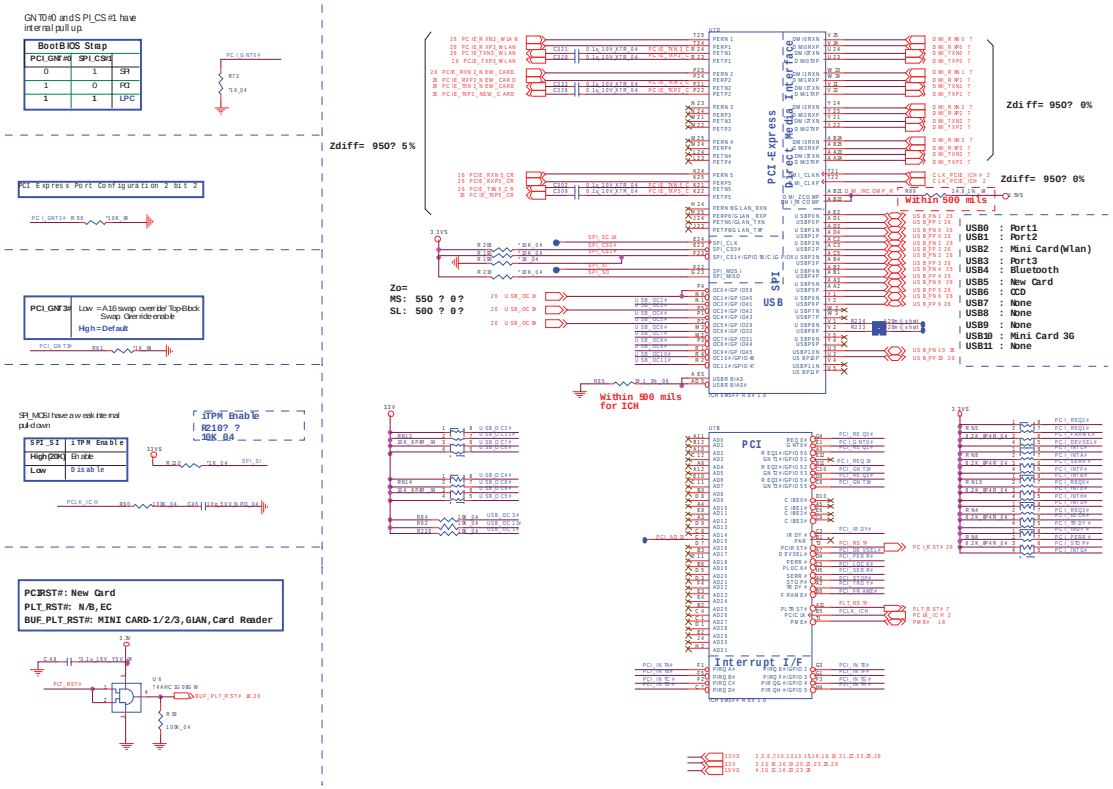

Sheet 14 of 46
ICH9-M SFF 2/5, PCI, USB

http://hobi-elektronika.net

ICH9-M SFF 3/5, GPIO

Sheet 15 of 46
ICH9-M SFF 3/5, GPIO

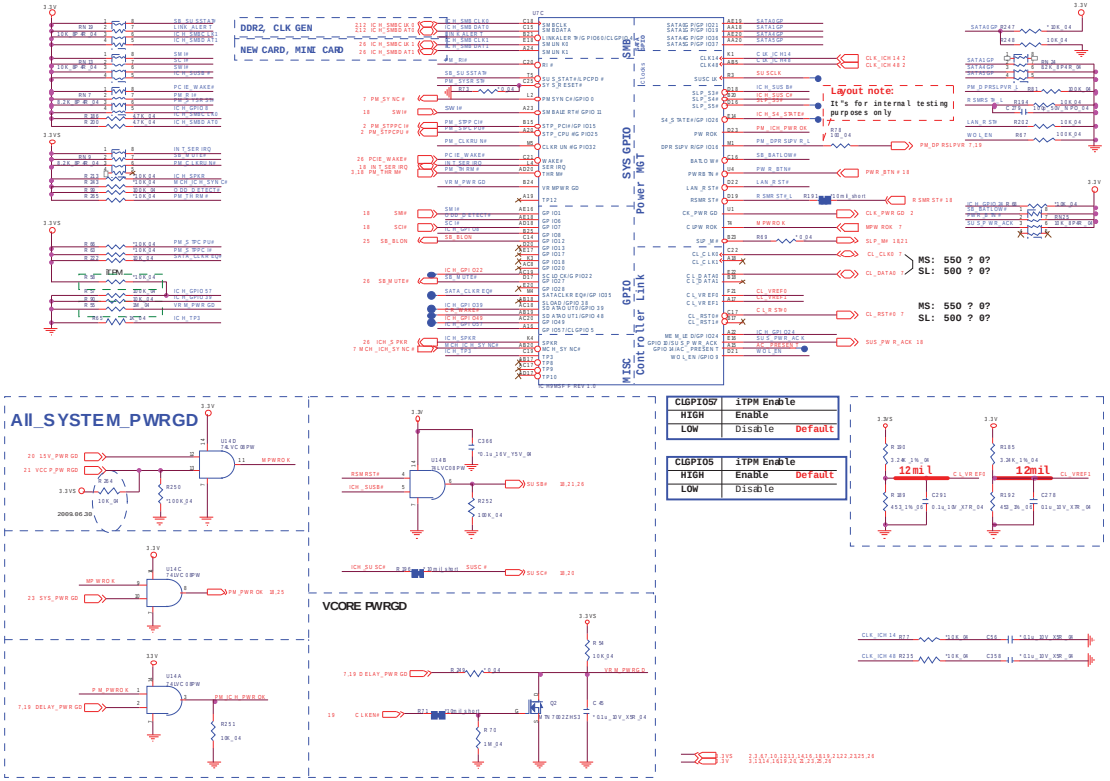

http://hobi-elektronika.net

ICH9-M SFF 4/5, Power

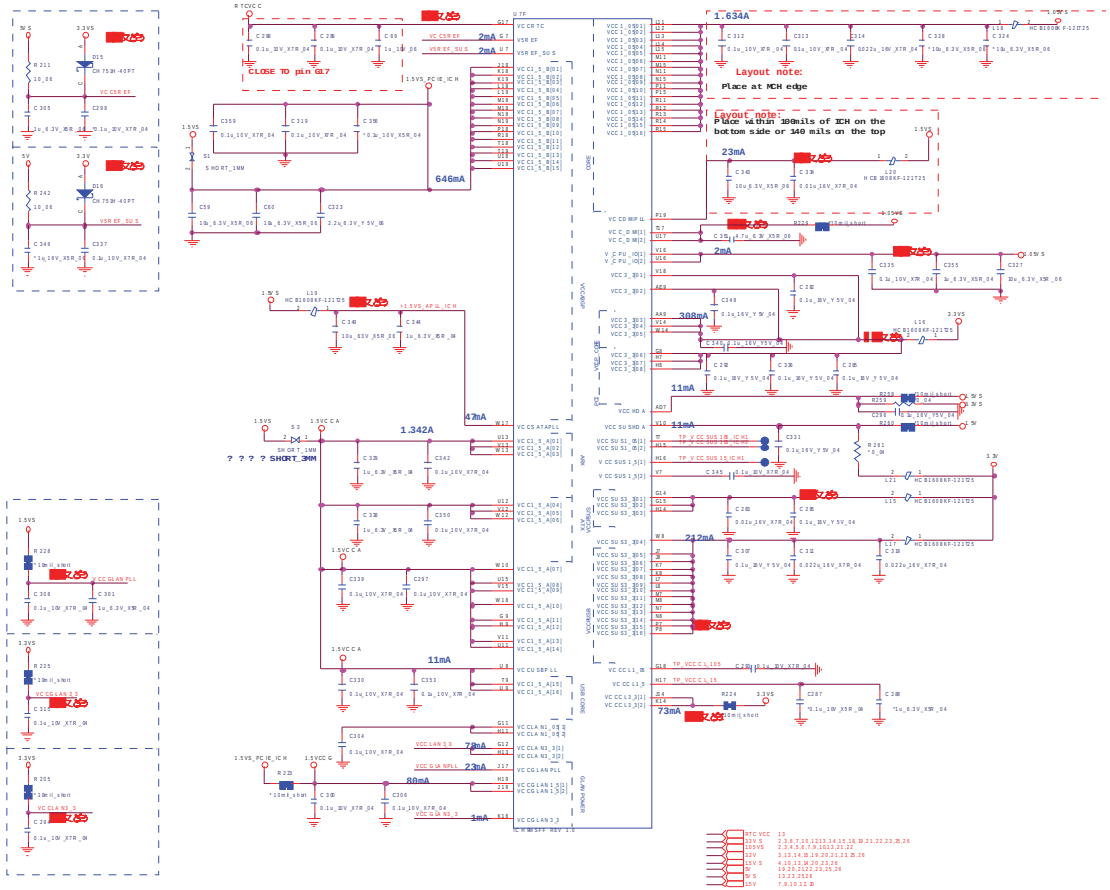

Sheet 16 of 46
ICH9-M SFF 4/5, Power

http://hobi-elektronika.net

ICH9-M SFF 5/5, GND

Sheet 17 of 46
ICH9-M SFF 5/5, GND

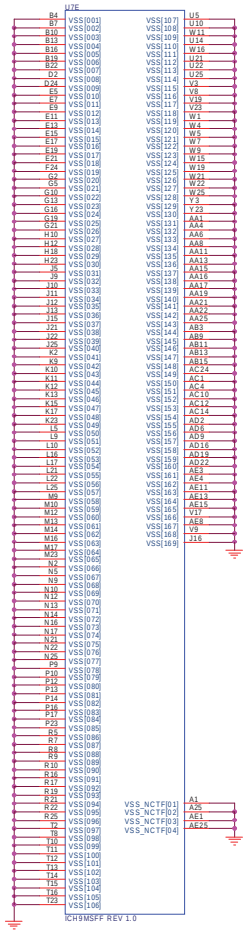

http://hobi-elektronika.net

EC KBC-ITE IT8502E

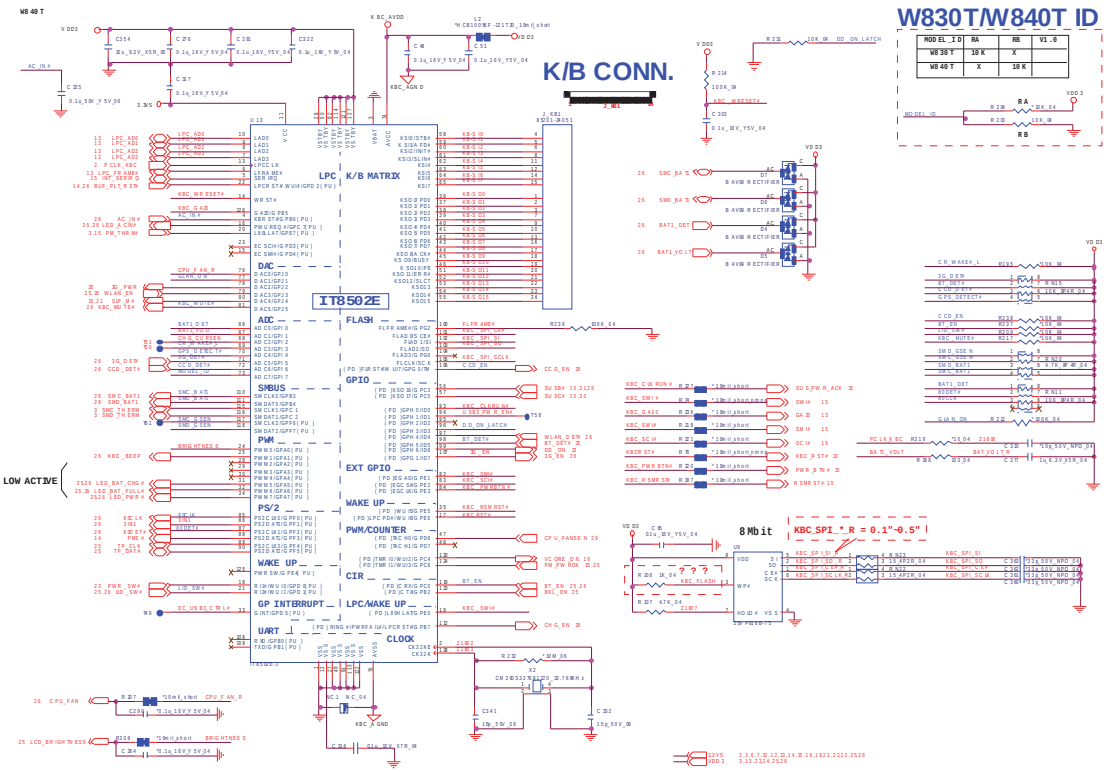

Sheet 18 of 46
EC KBC-ITE
IT8502E

http://hobi-elektronika.net

Power VCore

Sheet 19 of 46
Power VCore

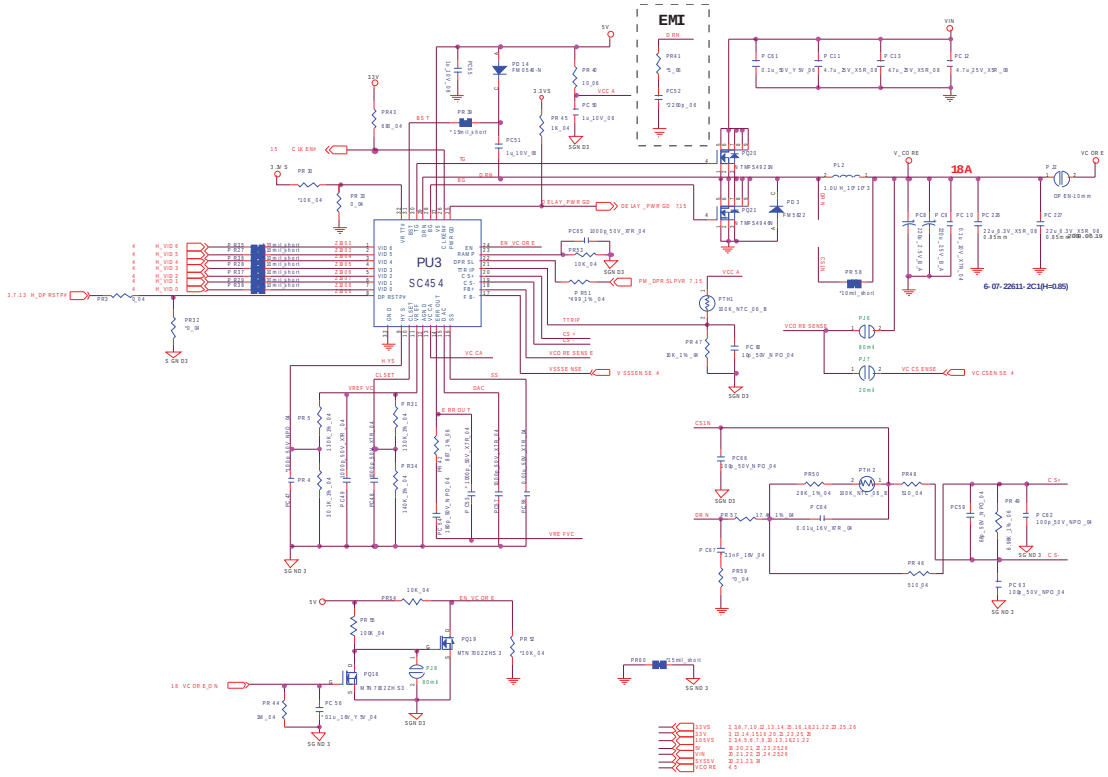

http://hobi-elektronika.net

Power 1.5V/0.75V/1.5VS

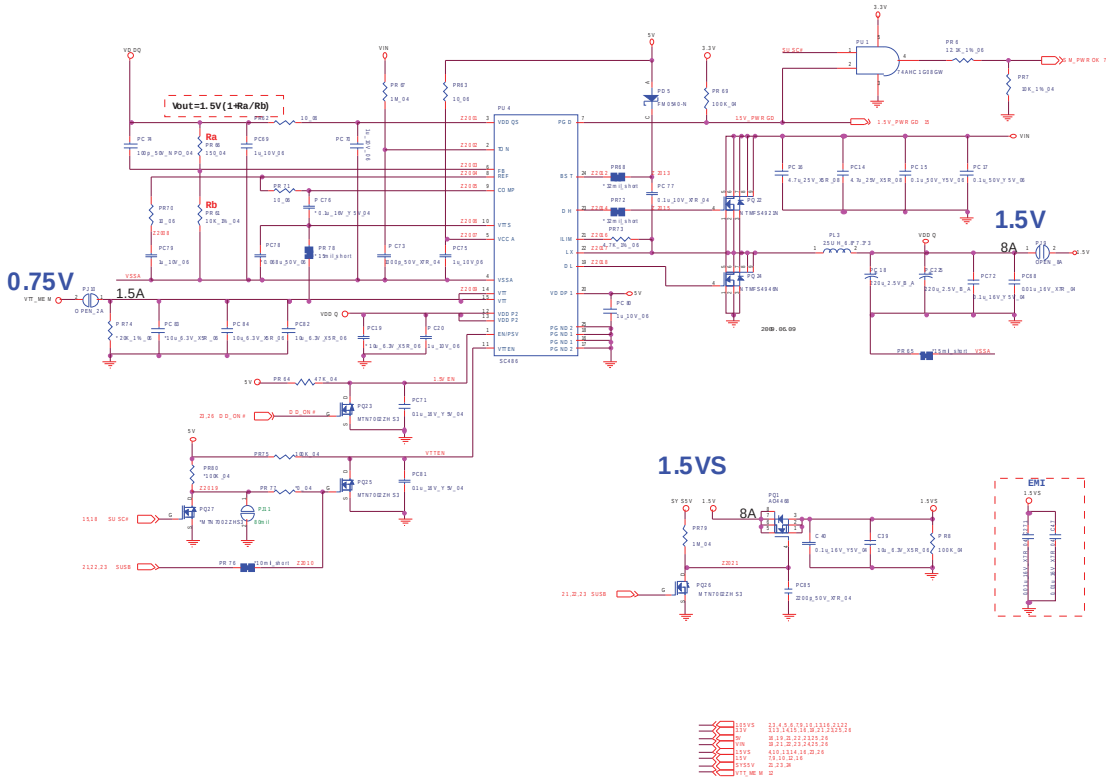

Sheet 20 of 46
Power 1.5V/0.75V/1.5VS

http://hobi-elektronika.net

Power 1.8V/1.05VS

Sheet 21 of 46
Power 1.8V/1.05VS

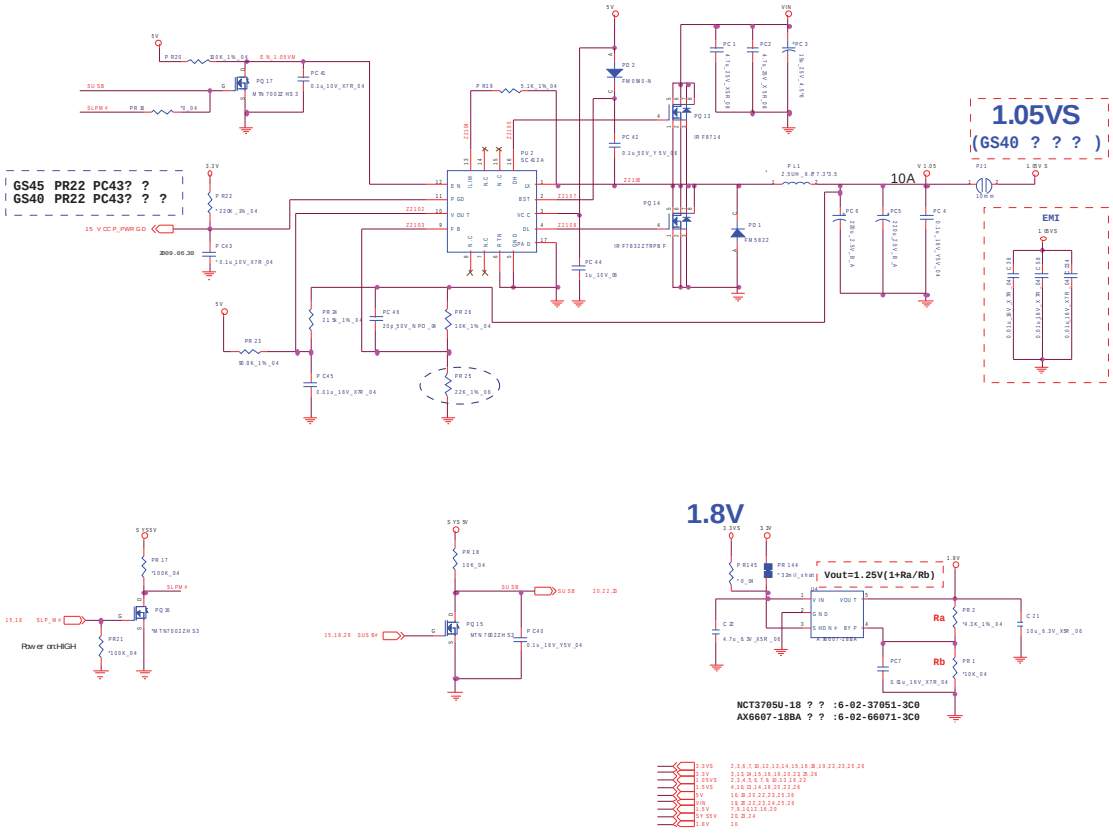

http://hobi-elektronika.net

Power VGA GPU (VGFX_Core)

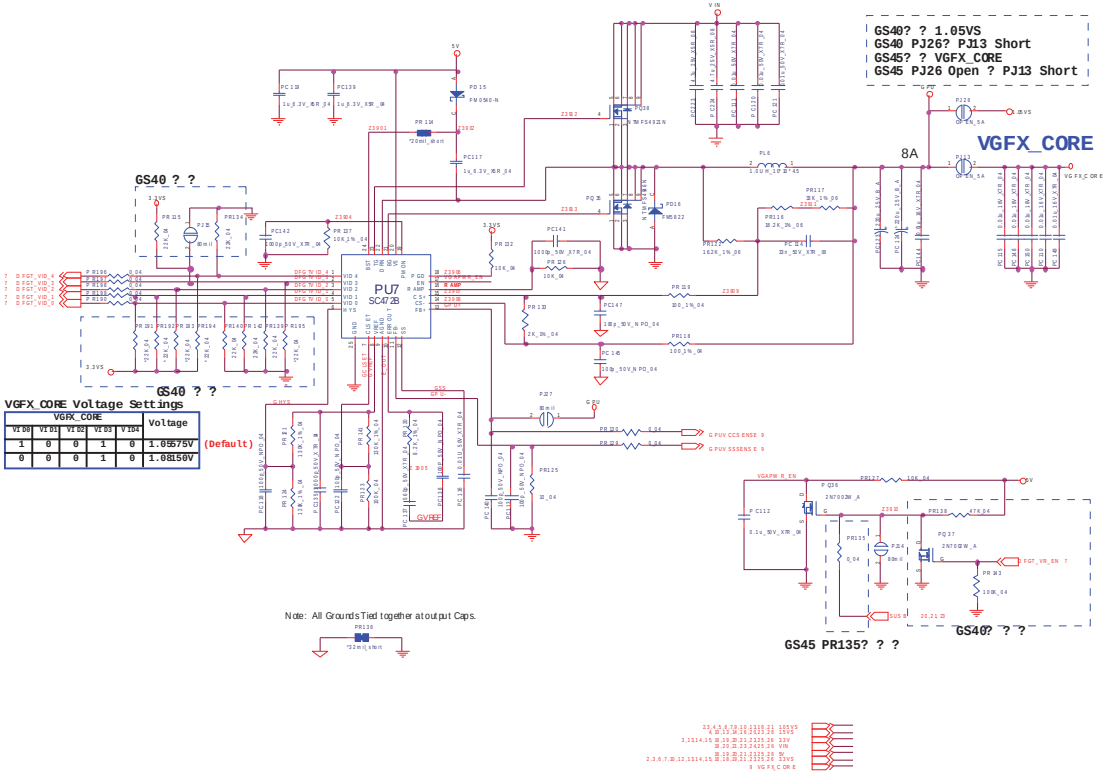

VGFX_CORE					Voltage
VID0	VID1	VID2	VID3	VID4	
1	0	0	1	0	1.05575V
0	0	0	1	0	1.08150V

Sheet 22 of 46
Power VGA GPU
(VGFX_Core)

http://hobi-elektronika.net

Power 5VS, 3VS, 3.3V, 5V

Sheet 23 of 46
Power 5VS, 3VS, 3.3V, 5V

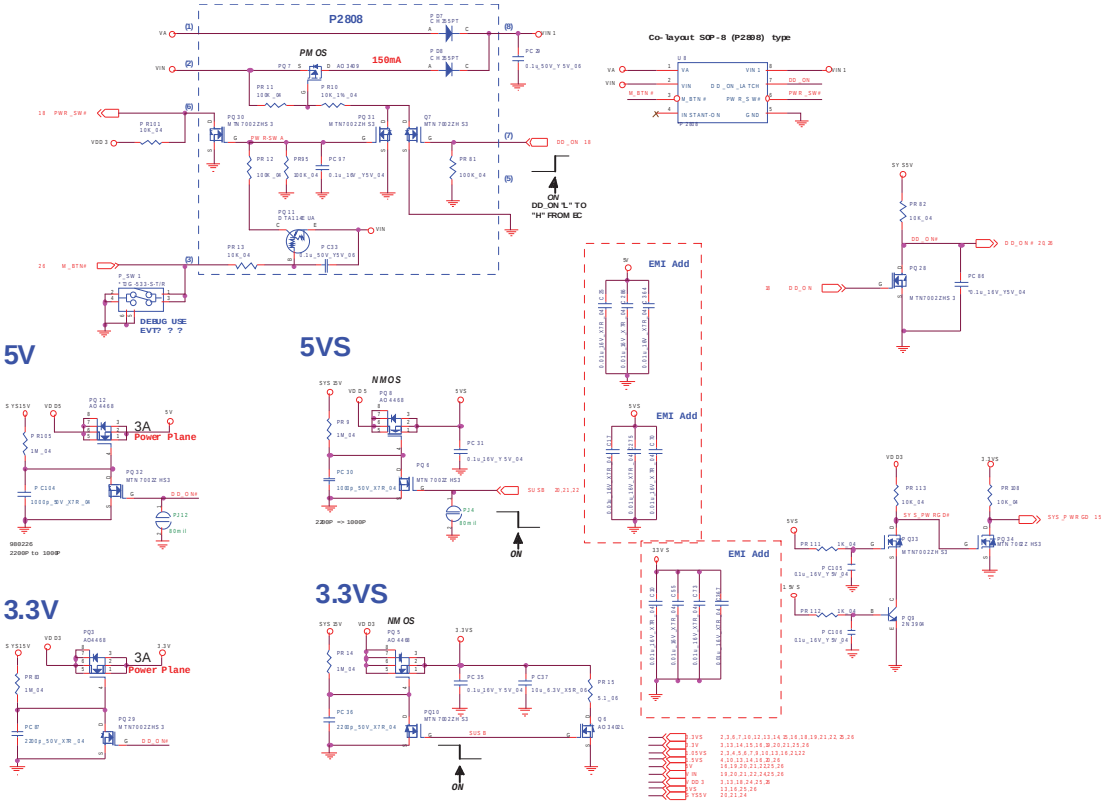

http://hobi-elektronika.net

Power VDD3/VDD5

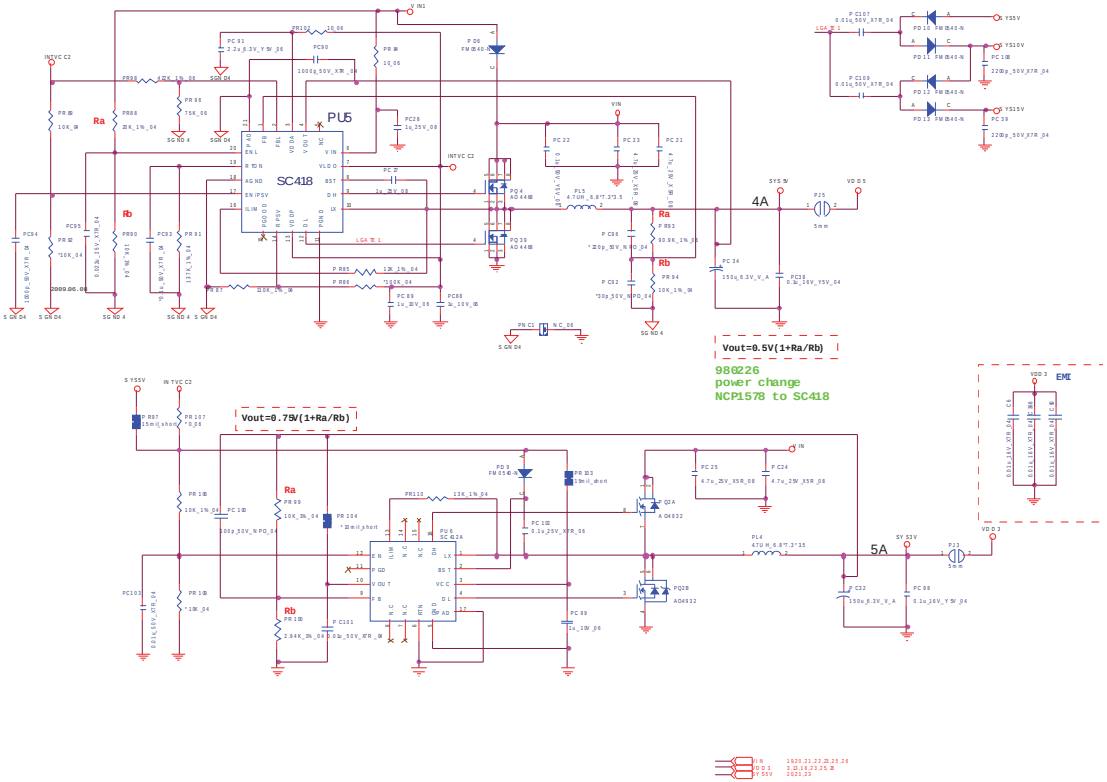

Sheet 24 of 46
Power VDD3/VDD5

http://hobi-elektronika.net

LCD/CCD/Click/BT Conn

Sheet 25 of 46
LCD/CCD/Click/
BT Conn

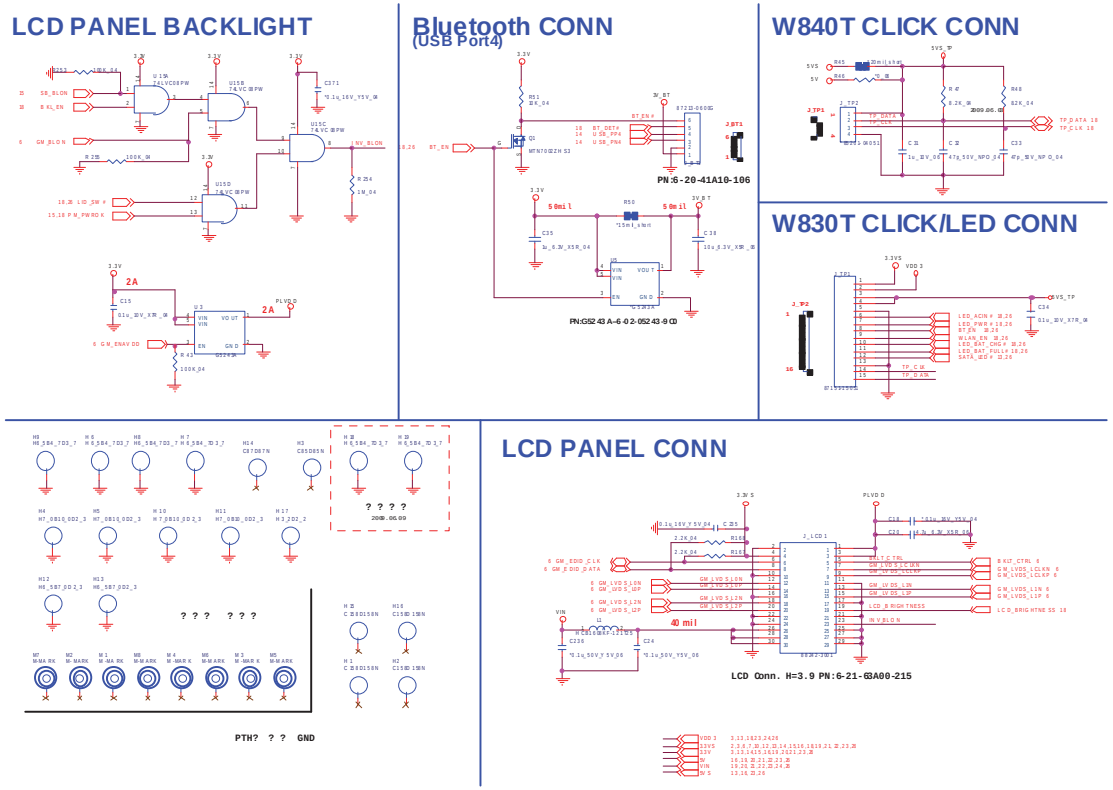

http://hobi-elektronika.net

To Multi, I/O Conn, W840T LED

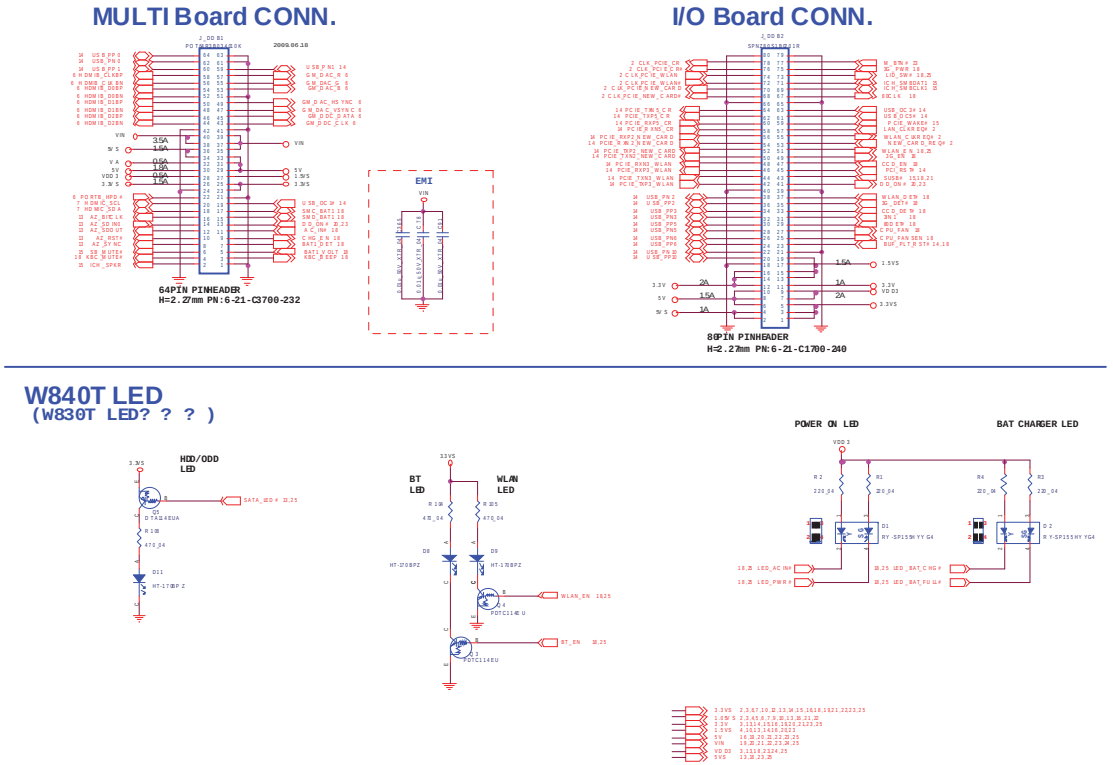

Sheet 26 of 46
To Multi, I/O Conn, W840T LED

http://hobi-elektronika.net

System Block Diagram (W830T)

Sheet 27 of 46
System Block
Diagram (W830T)

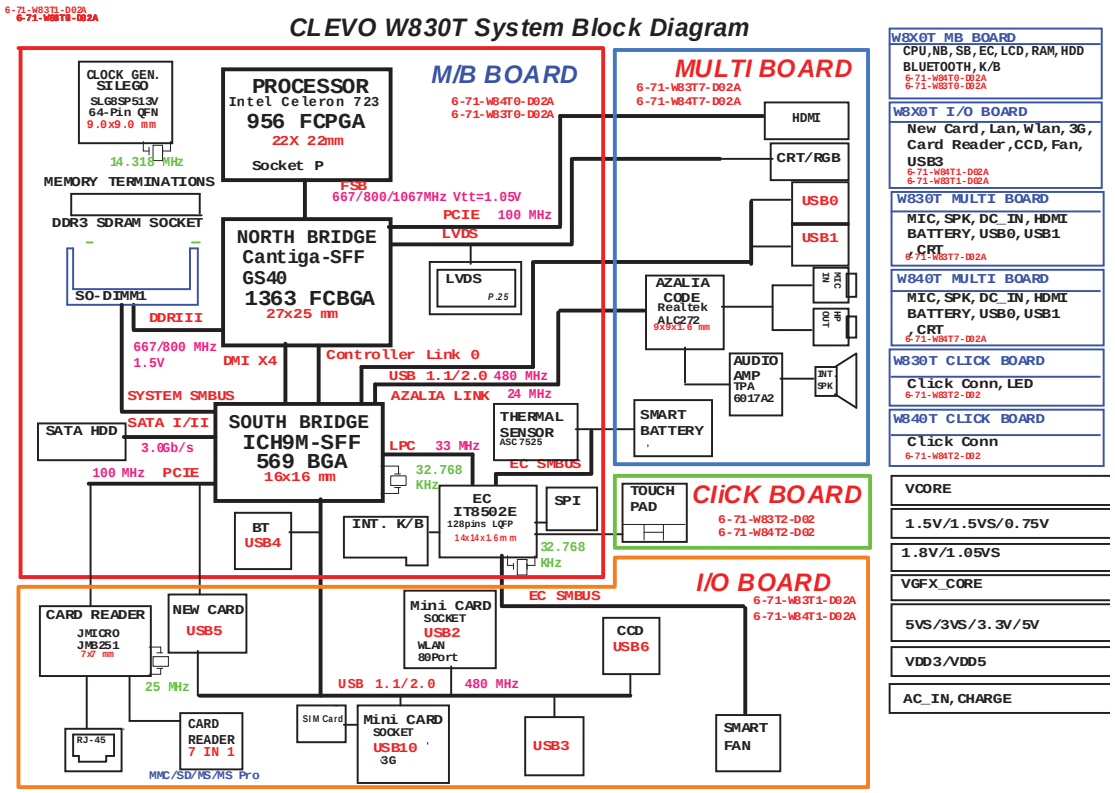

http://hobi-elektronika.net

W830T I/O (JMC251)

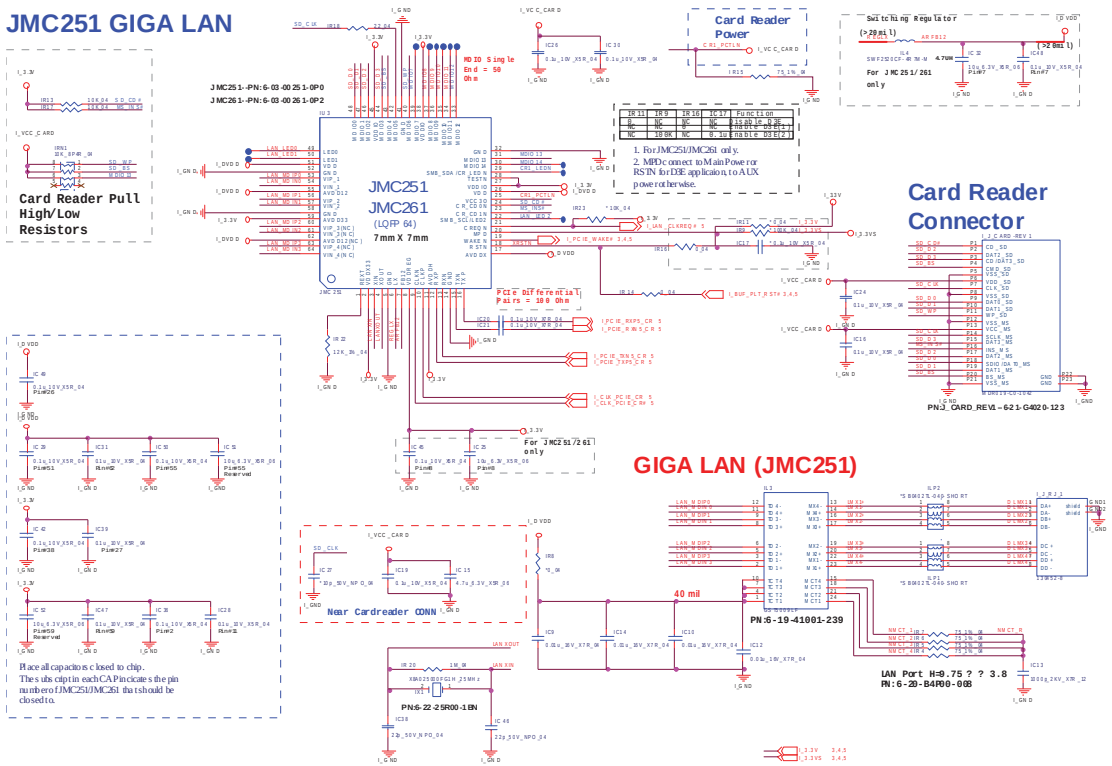

Sheet 28 of 46
W830T I/O
(JMC251)

http://hobi-elektronika.net

W830T I/O (CCD, MINI, WLAN/3G)

Sheet 29 of 46
W830T I/O (CCD, MINI, WLAN/3G)

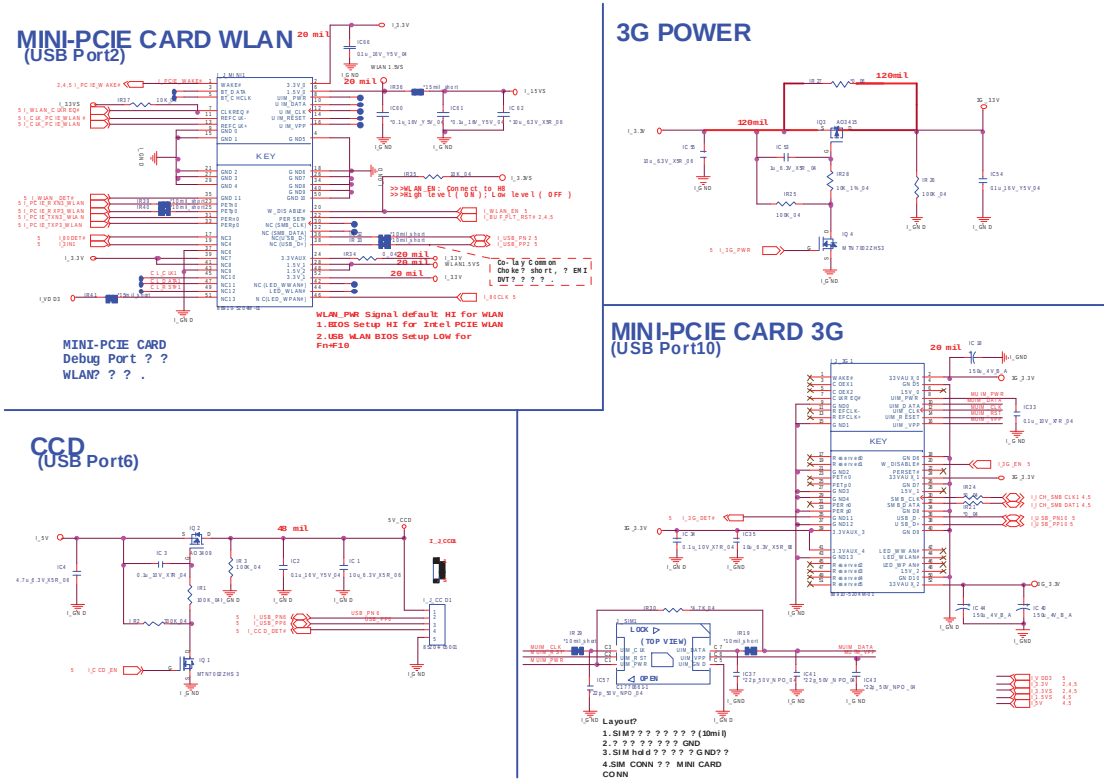

http://hobi-elektronika.net

W830T I/0 (New Card, Fan, USB)

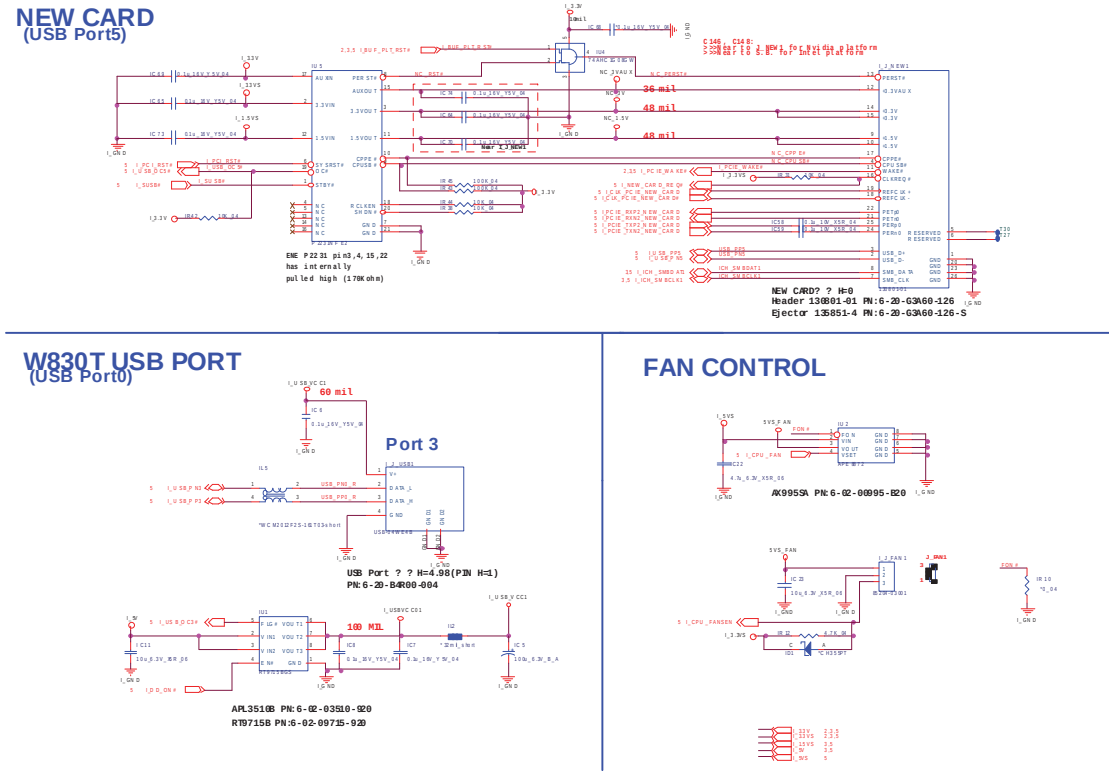

Sheet 30 of 46
W830T I/O
(New Card, Fan, USB)

http://hobi-elektronika.net

W830T I/O to MB Conn (SW)

Sheet 31 of 46
W830T I/O to MB Conn (SW)

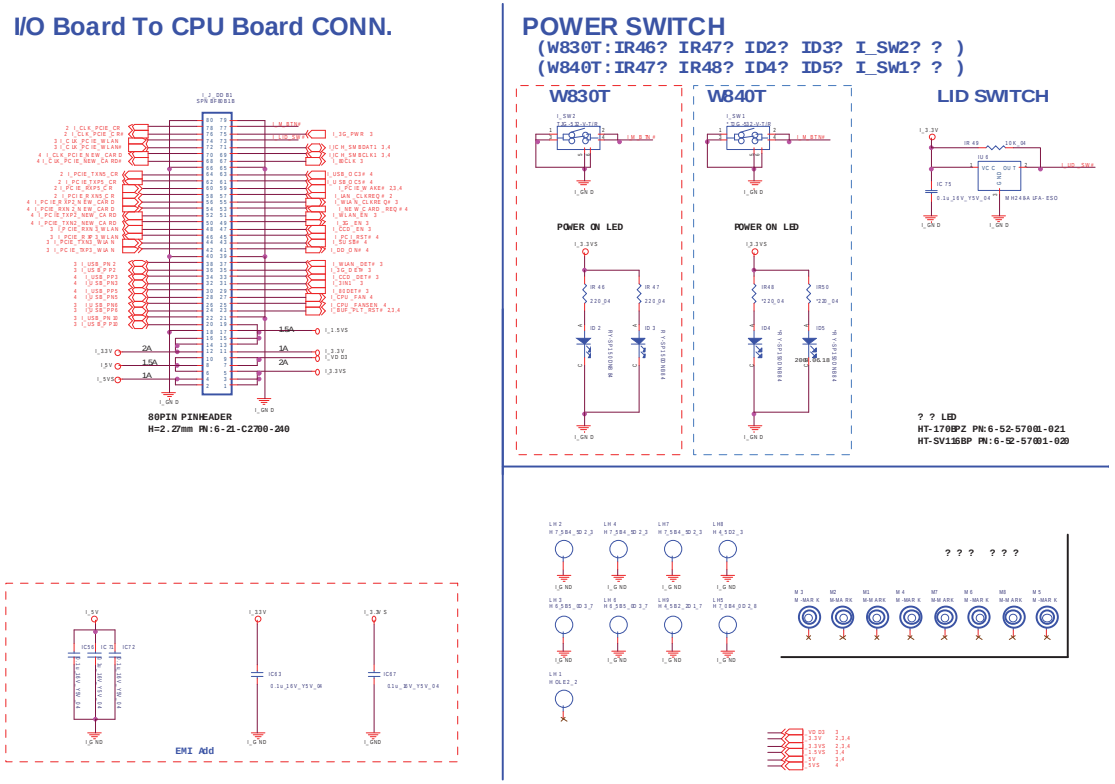

http://hobi-elektronika.net

W830T Multi (Audio ALC272)

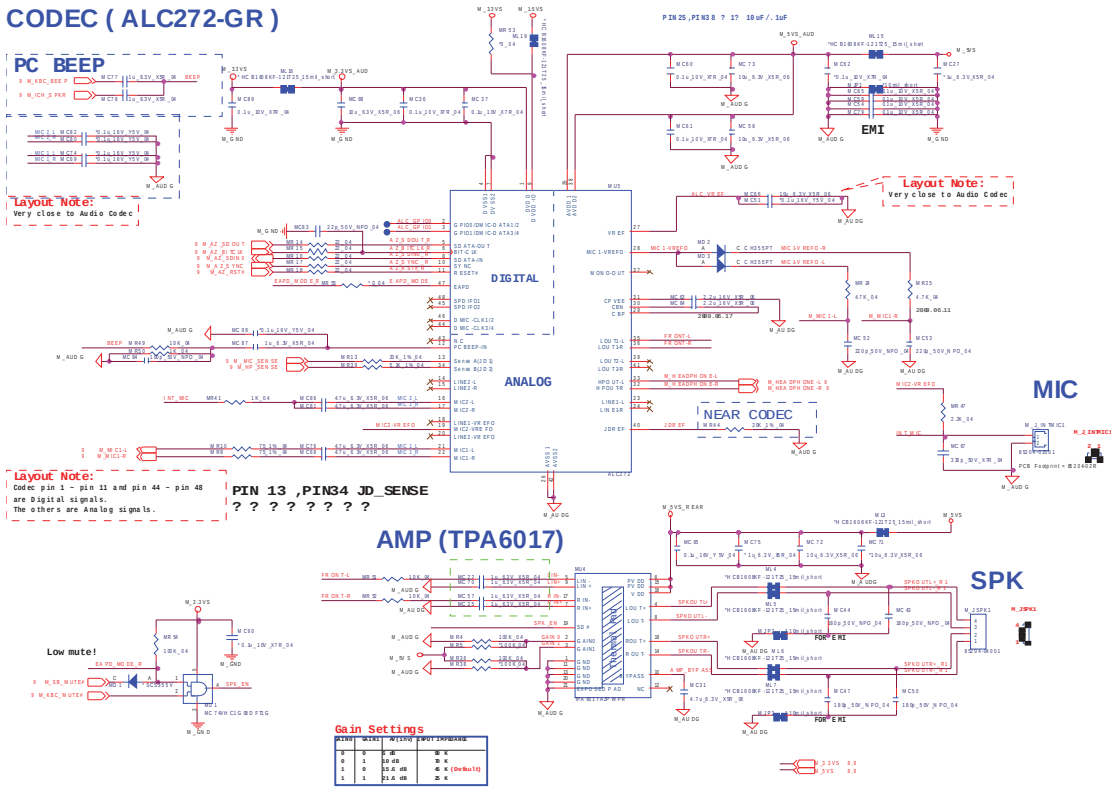

Sheet 32 of 46
W830T Multi
(Audio ALC272)

B.Schematic Diagrams

http://hobi-elektronika.net

W830T Multi (AC_In, Charger)

Sheet 33 of 46
W830T Multi
(AC_In, Charger)

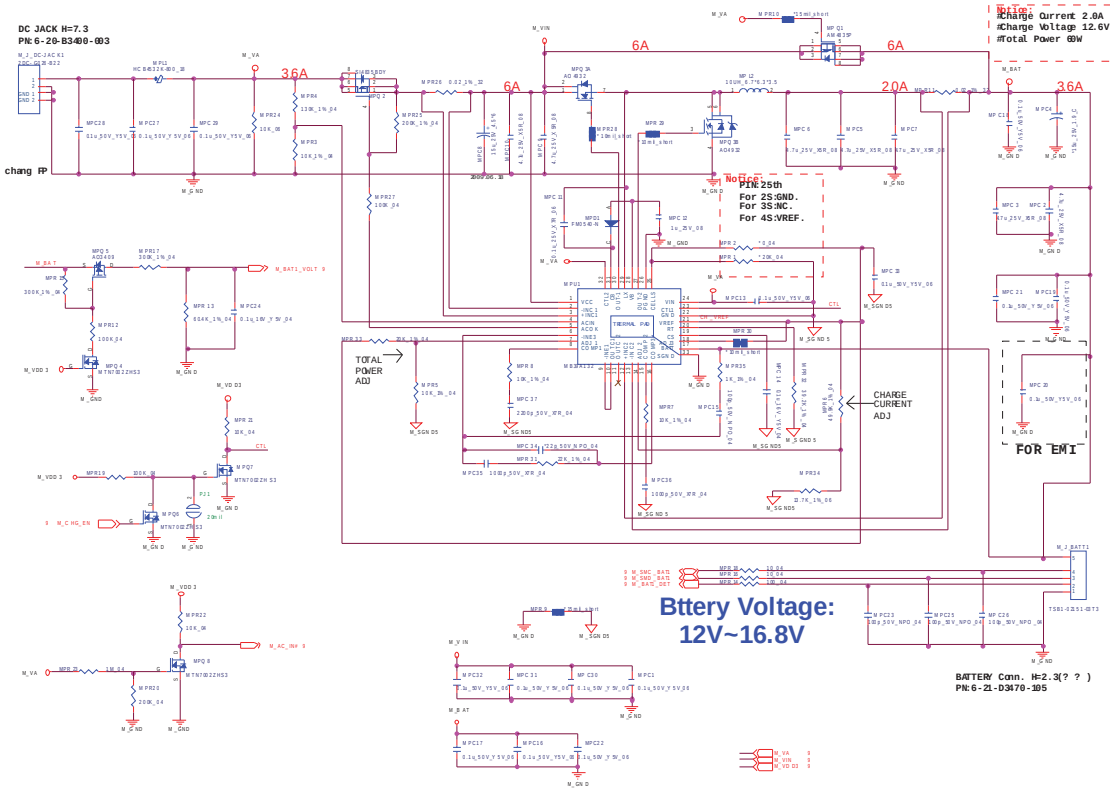

http://hobi-elektronika.net

W830T Multi (HDMI/CRT Port)

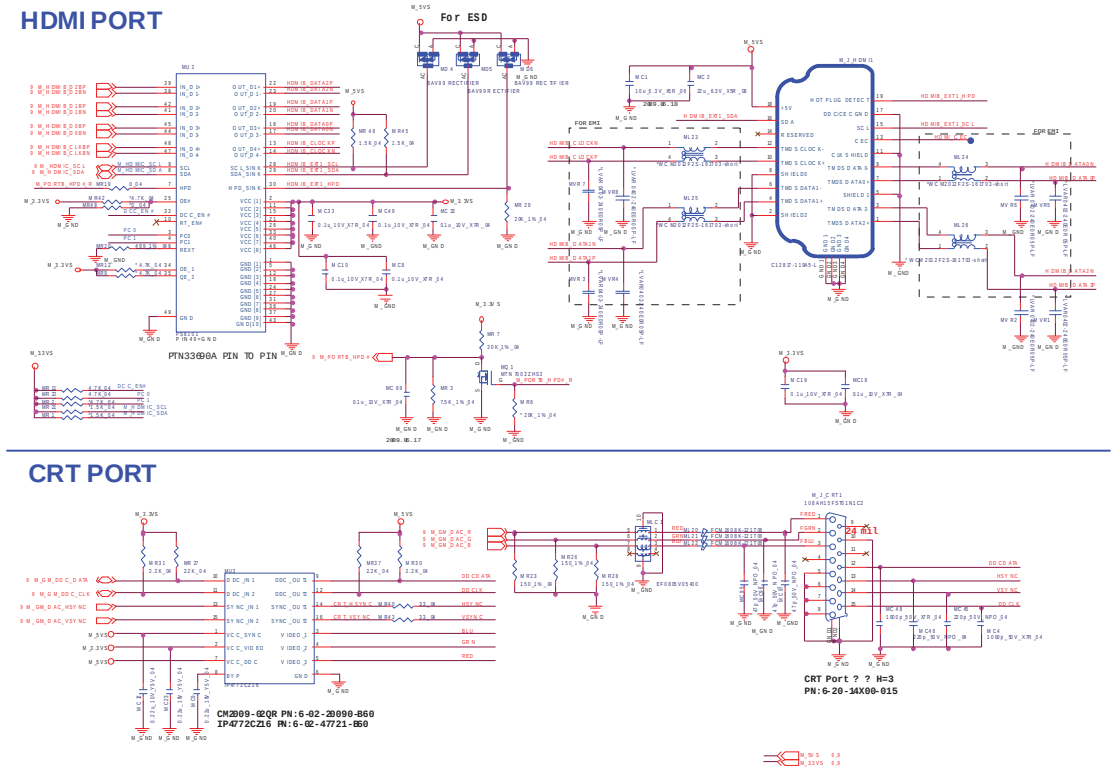

Sheet 34 of 46
W830T Multi (HDMI/ CRT Port)

http://hobi-elektronika.net

W830T to CPU Conn (Jack, USB)

Sheet 35 of 46
W830T to CPU
Conn (Jack, USB)

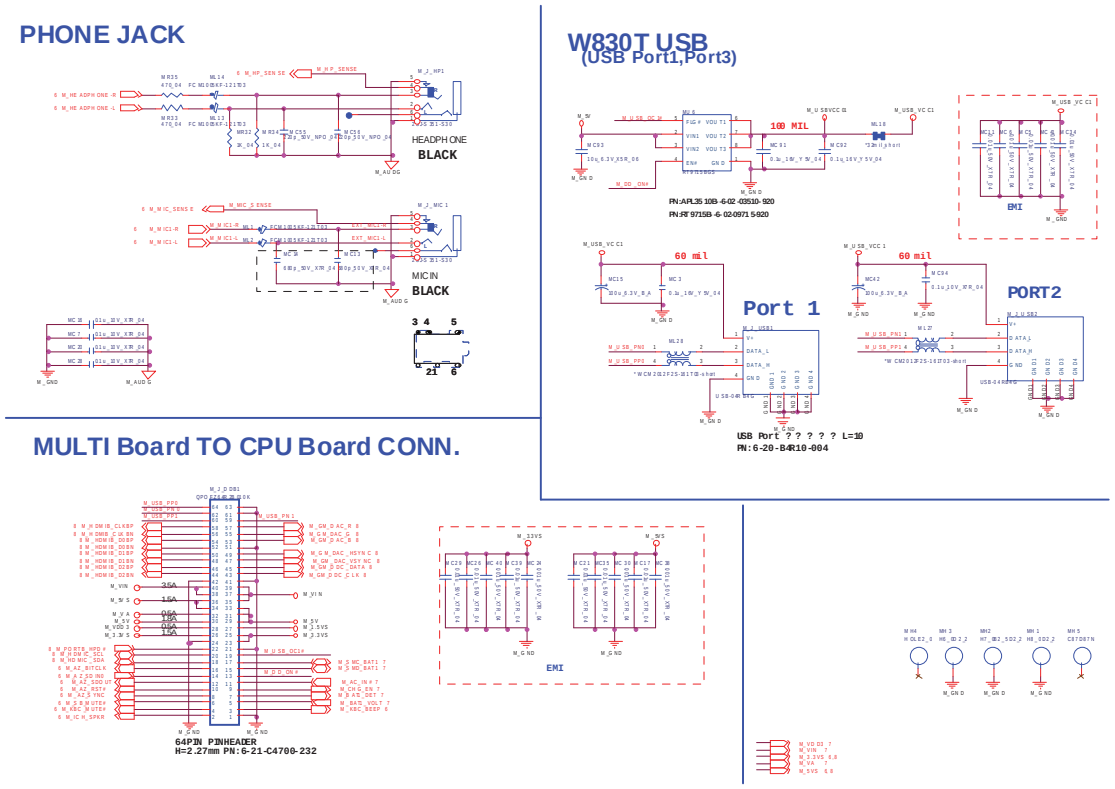

http://hobi-elektronika.net

W830T Click Board (LED)

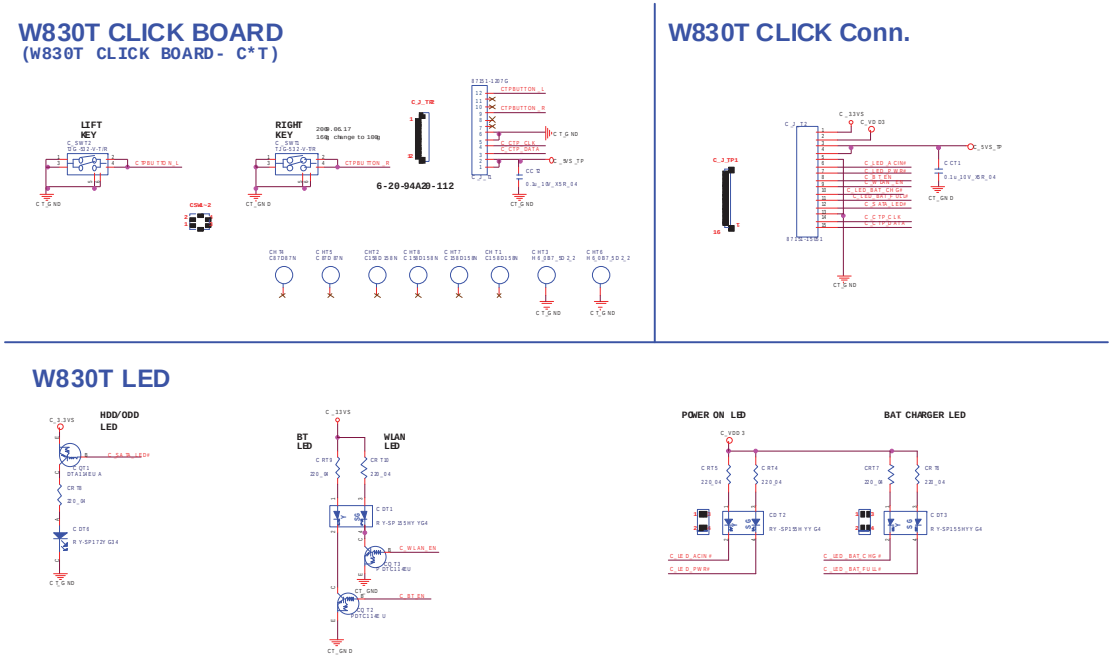

Sheet 36 of 46
W830T Click Board (LED)

http://hobi-elektronika.net

System Block Diagram (W840T)

Sheet 37 of 46
System Block
Diagram (W840T)

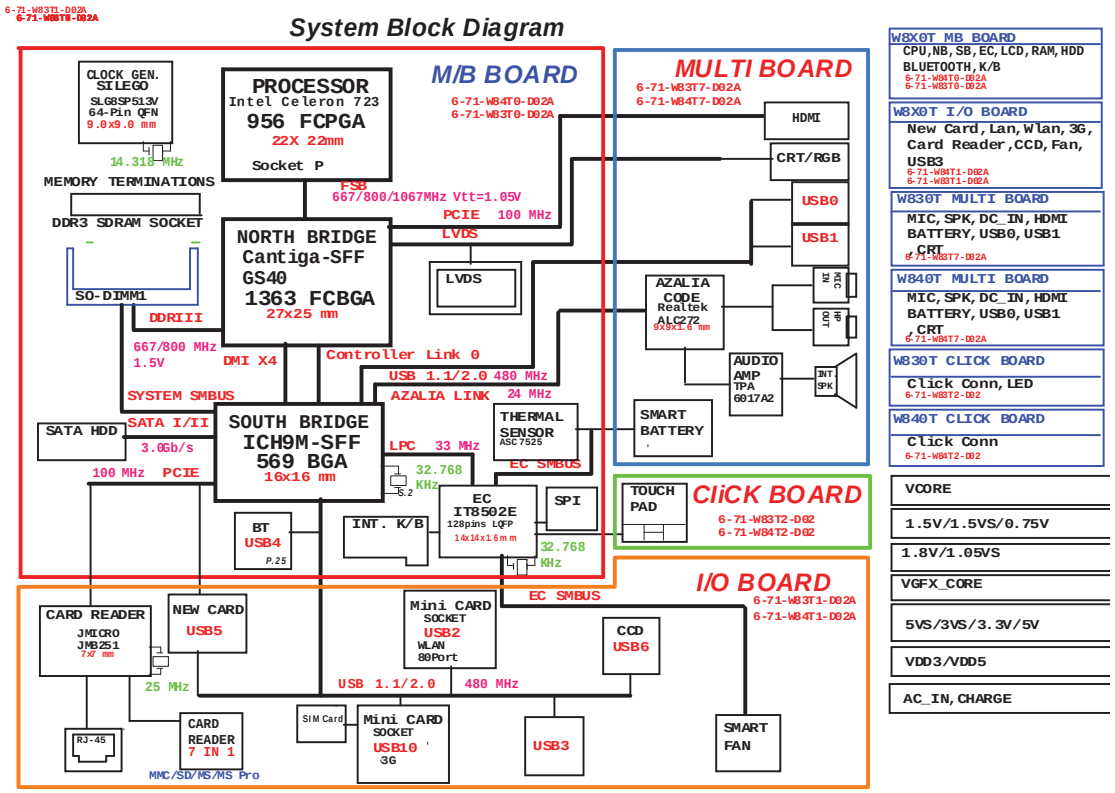

http://hobi-elektronika.net

W840T I/O (JMC251)

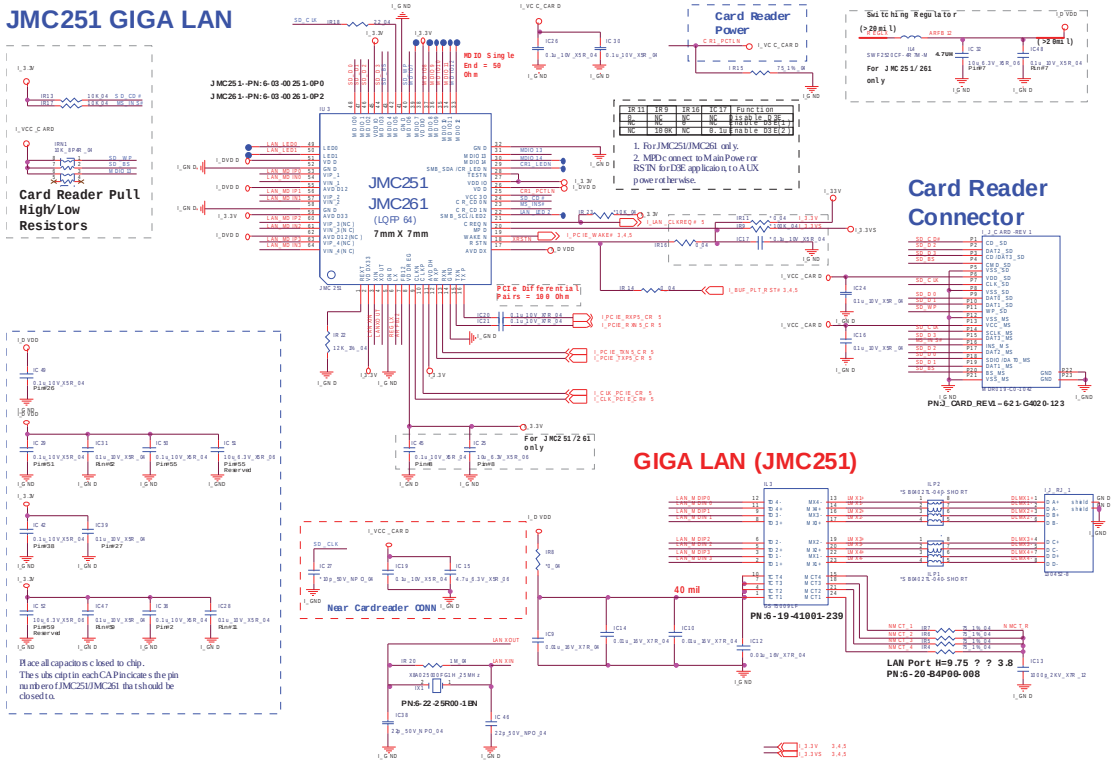

Sheet 38 of 46
W840T I/O
(JMC251)

http://hobi-elektronika.net

W840T I/O (CCD, MINI, WLAN/3G)

Sheet 39 of 46
W840T I/O (CCD, MINI, WLAN/3G)

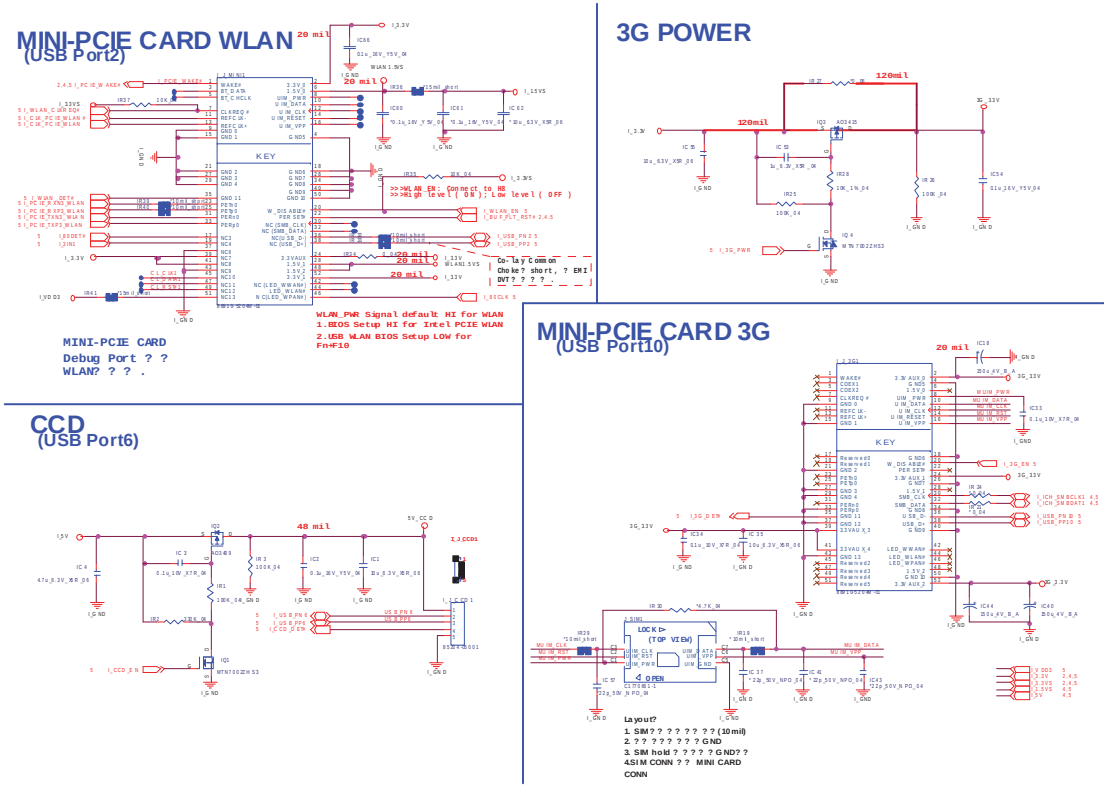

http://hobi-elektronika.net

W840T I/0 (New Card, Fan, USB)

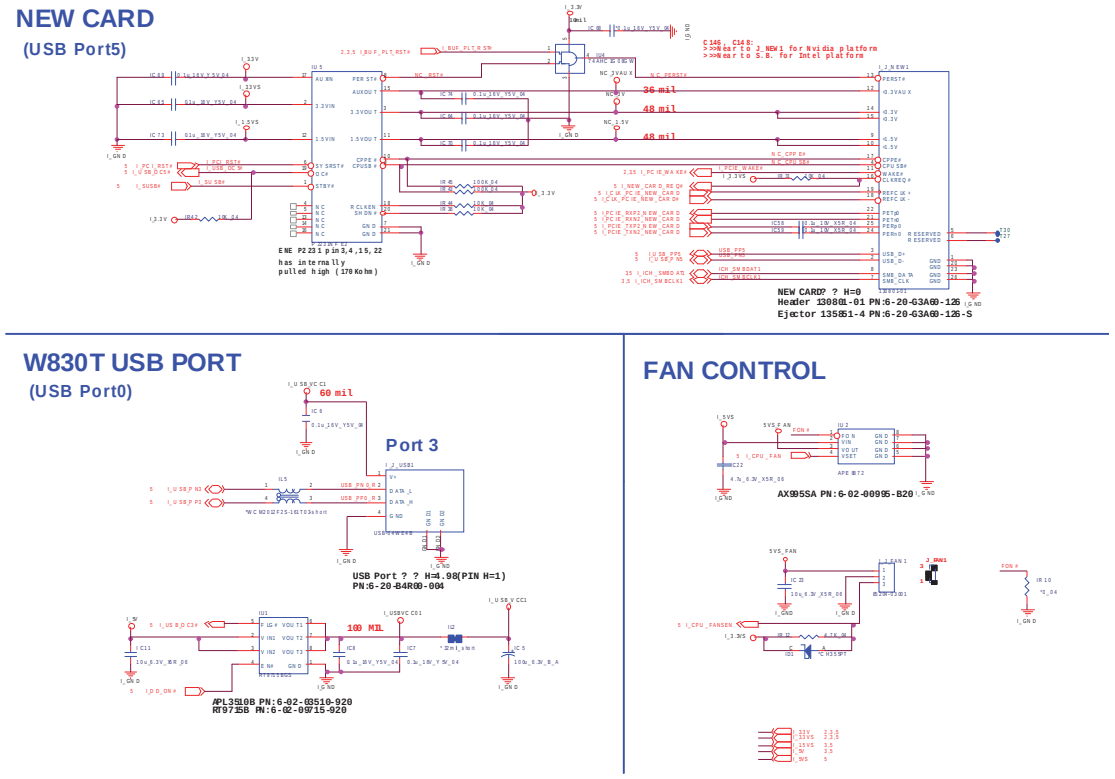

Sheet 40 of 46
W840T I/O
(New Card, Fan, USB)

http://hobi-elektronika.net

W840T I/O to MB Conn (SW)

Sheet 41 of 46
W840T I/O to MB Conn (SW)

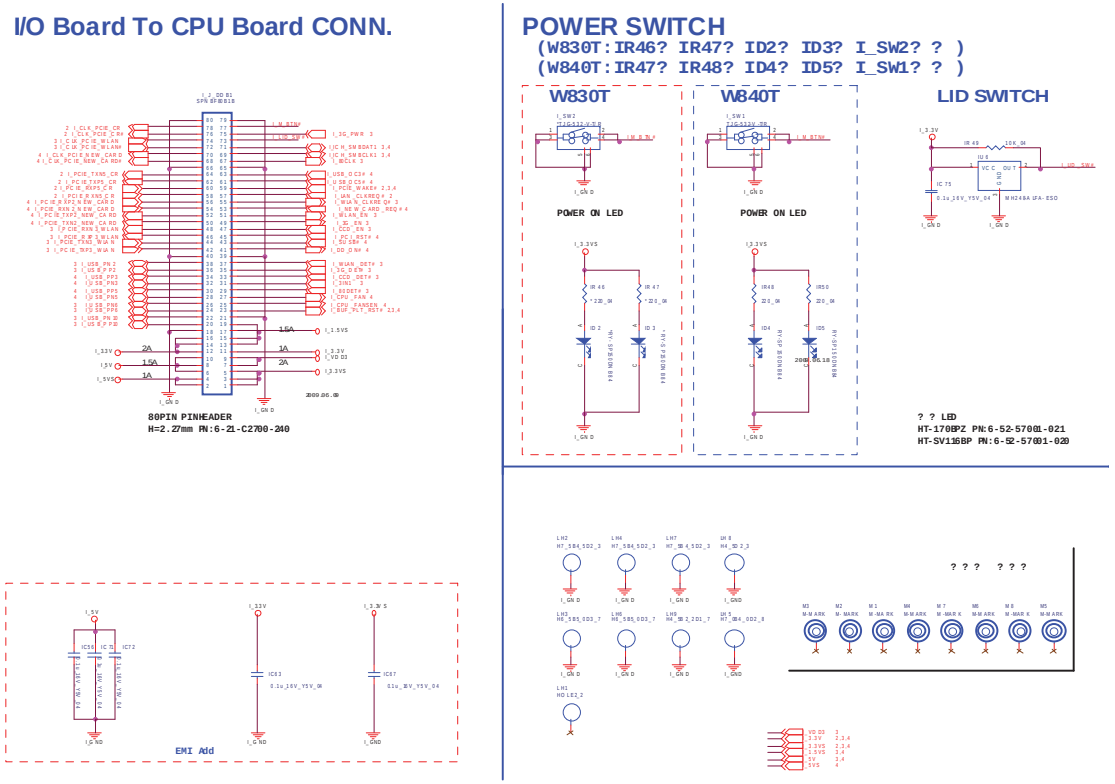

http://hobi-elektronika.net

W840T Multi (Audio ALC272)

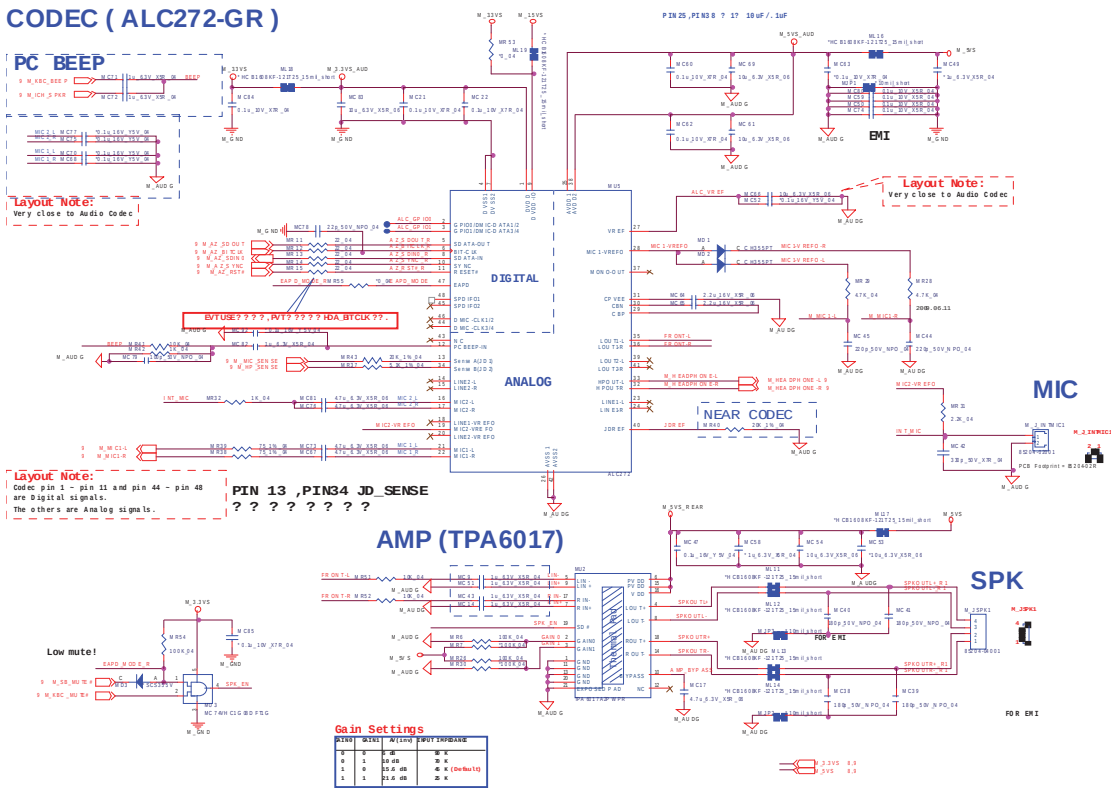

Sheet 42 of 46
W840T Multi
(Audio ALC272)

B.Schematic Diagrams

http://hobi-elektronika.net

W840T Multi (AC_In, Charger)

Sheet 43 of 46
W840T Multi
(AC_In, Charger)

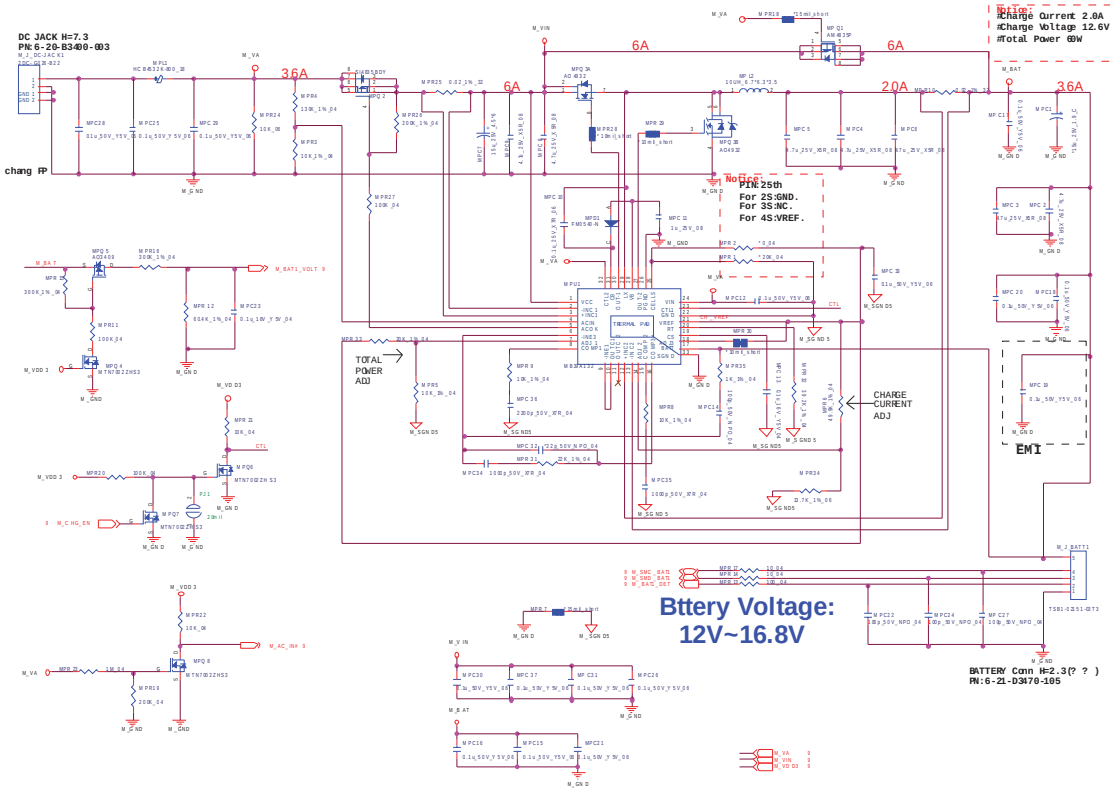

http://hobi-elektronika.net

W840T Multi (HDMI/CRT Port)

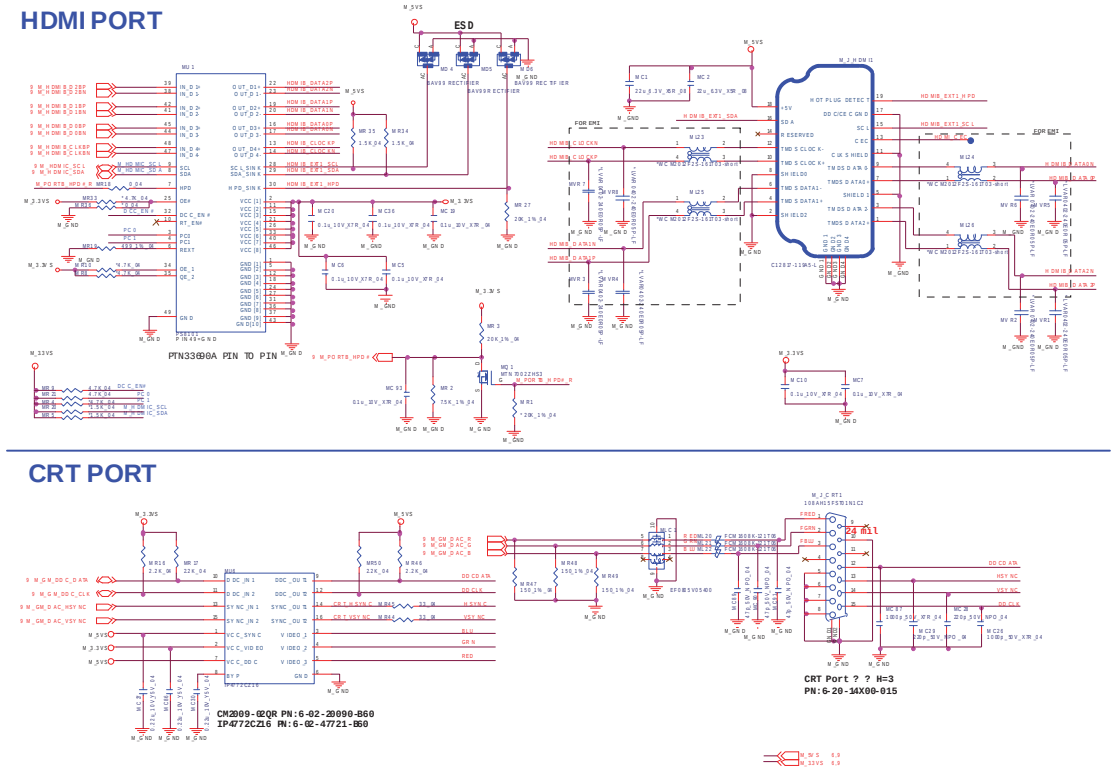

Sheet 44 of 46
W840T Multi (HDMI/
CRT Port)

http://hobi-elektronika.net

W840T to CPU Conn (Jack, USB)

Sheet 45 of 46
W840T to CPU
Conn (Jack, USB)

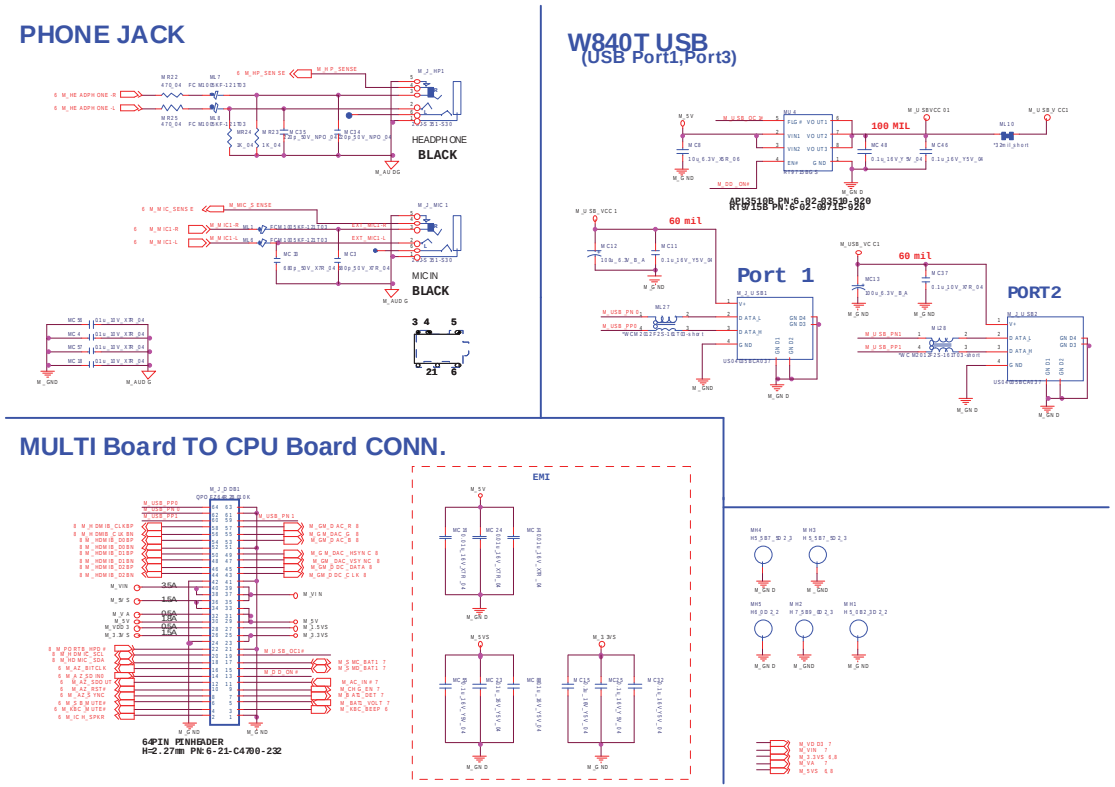

http://hobi-elektronika.net

W840T Click Board (LED)

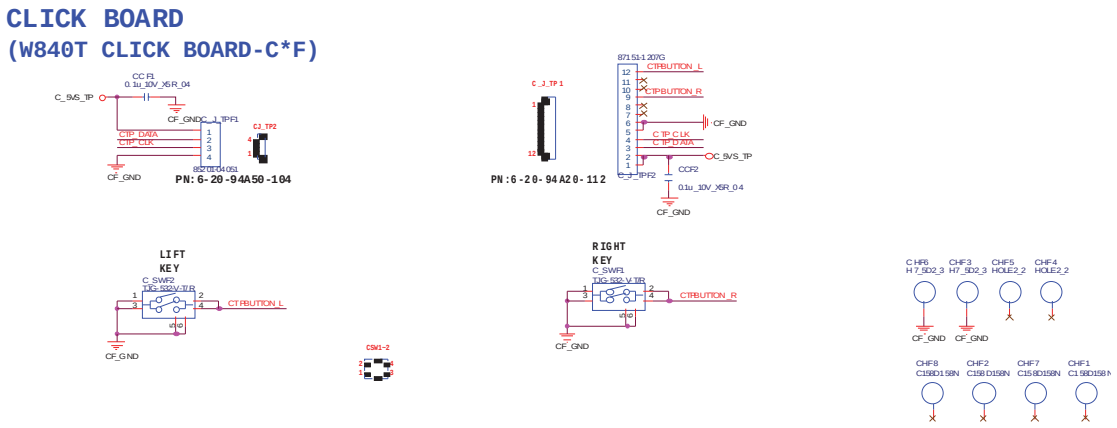

Sheet 46 of 46
W840T Click Board (LED)

http://hobi-elektronika.net