System Block Diagram

Sheet 1 of 49
System Block Diagram

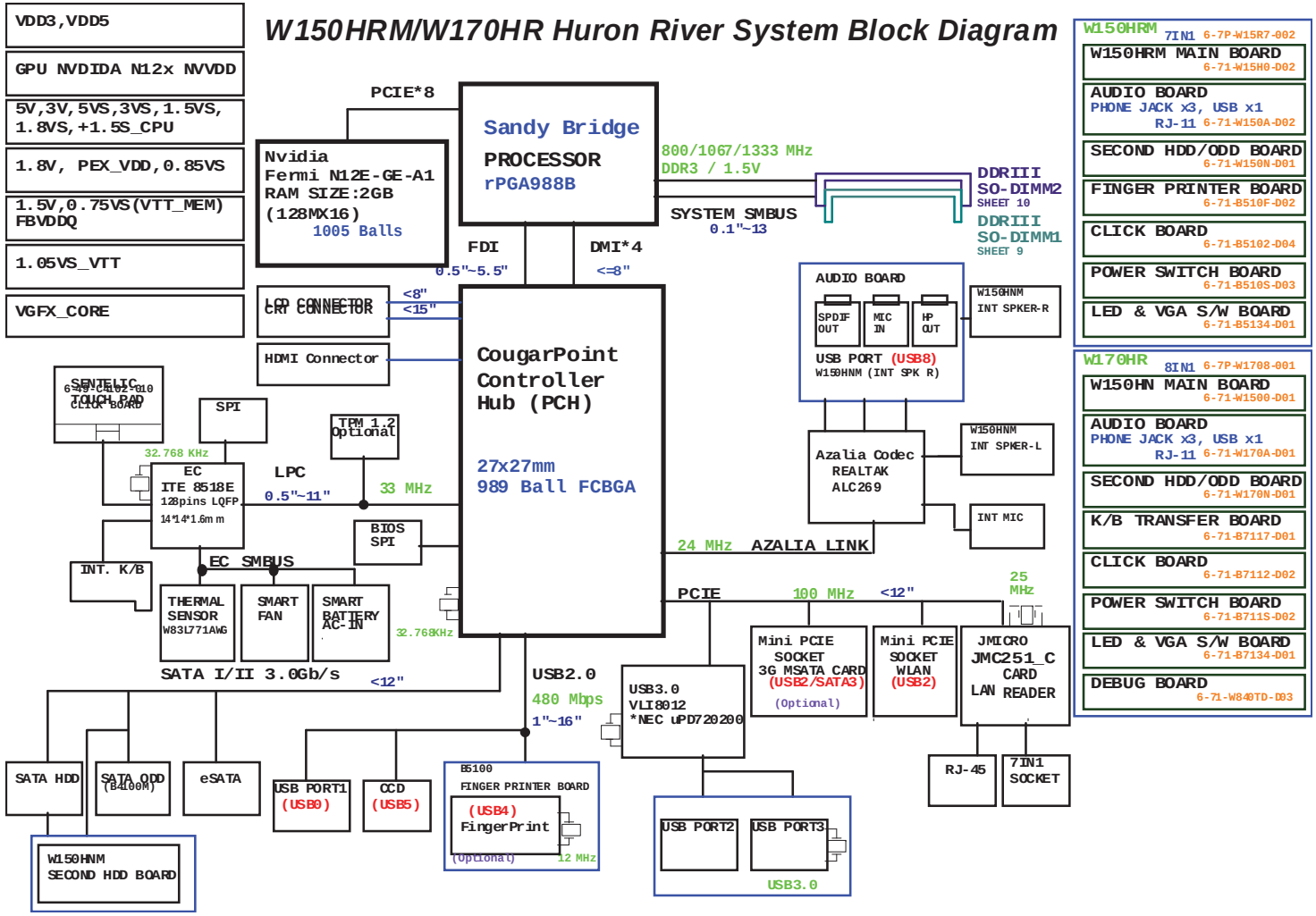

http://hobi-elektronika.net

Sandy Bridge Processor 1/7

Sandy Bridge Processor 1/7 (DMI,PEG,FDI)

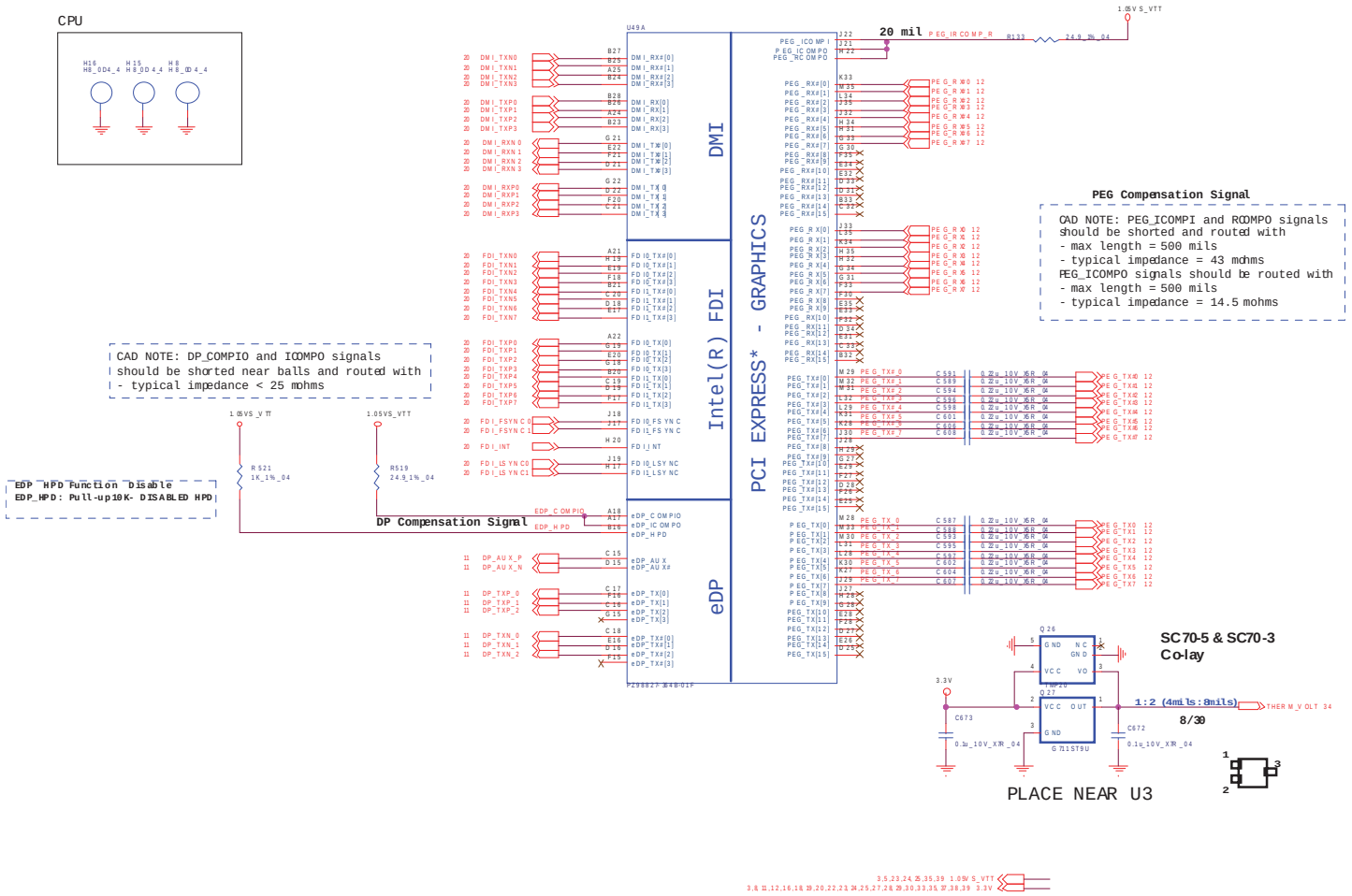

Sheet 2 of 49
Sandy Bridge
Processor 1/7

B.Schematic Diagrams

http://hobi-elektronika.net

Sandy Bridge Processor 2/7

Sheet 3 of 49
Sandy Bridge Processor 2/7

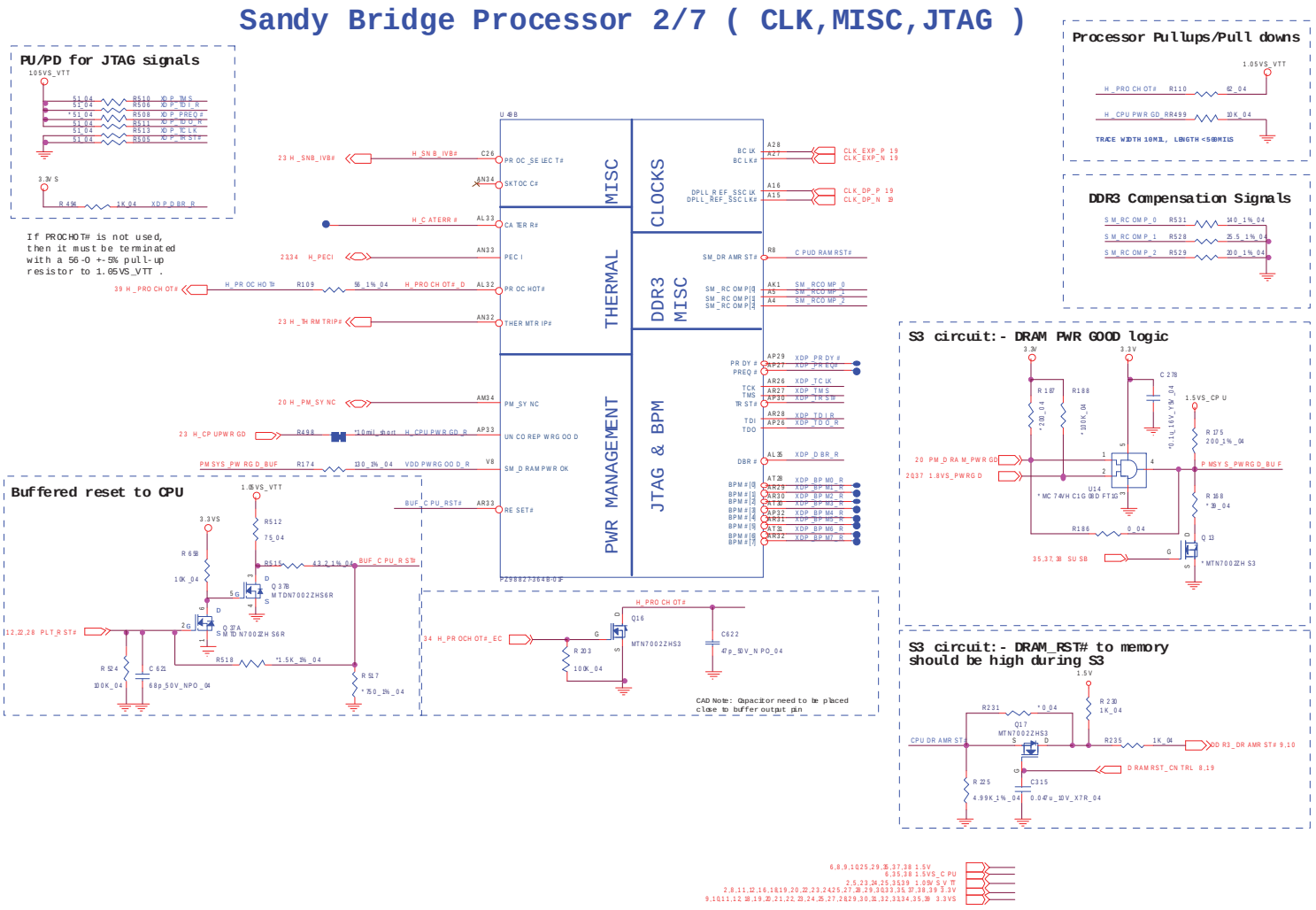

http://hobi-elektronika.net

Sandy Bridge Processor 3/7

Sandy Bridge Processor 3/7 (DDR3)

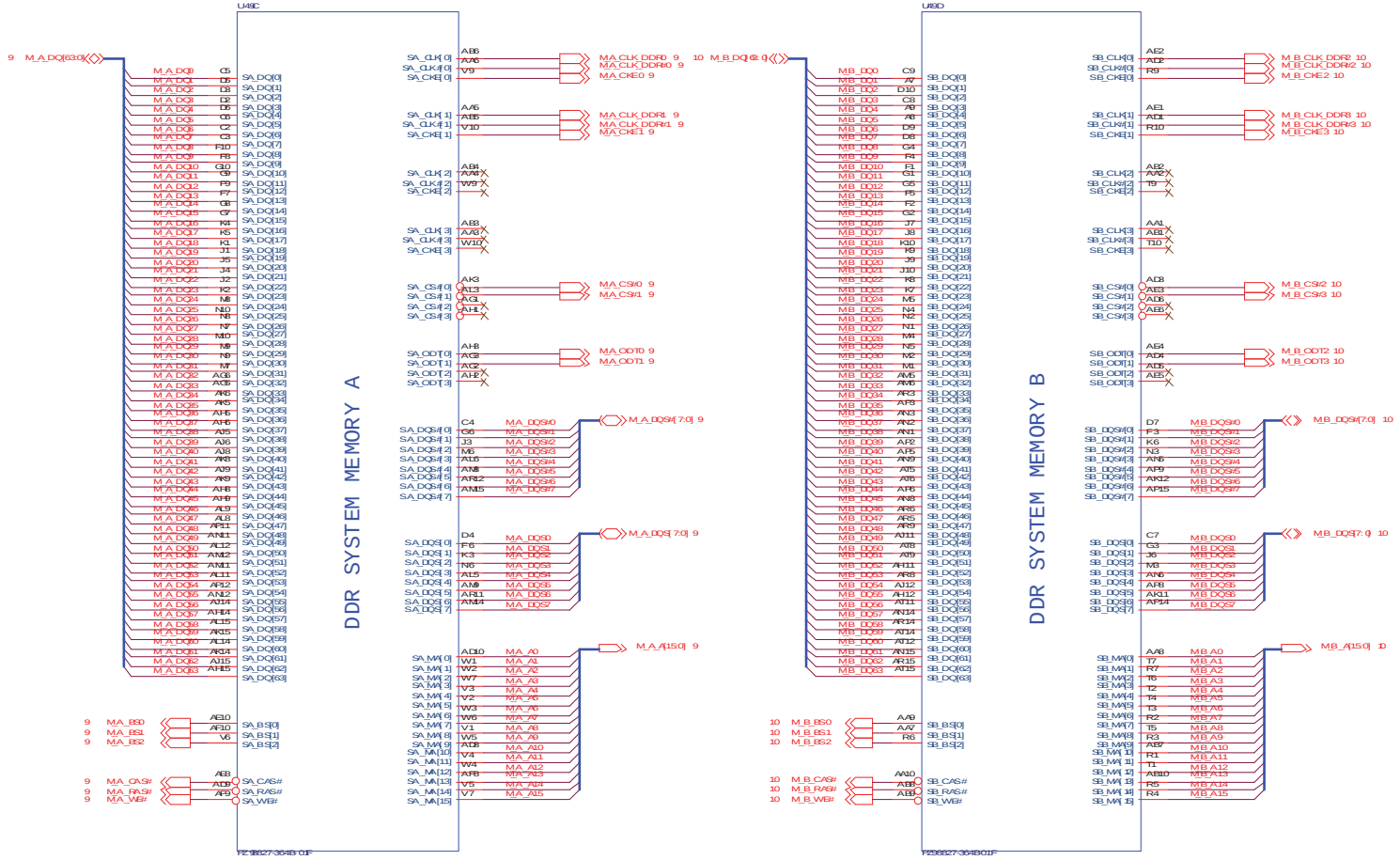

Sheet 4 of 49
Sandy Bridge
Processor 3/7

http://hobi-elektronika.net

Sandy Bridge Processor 4/7

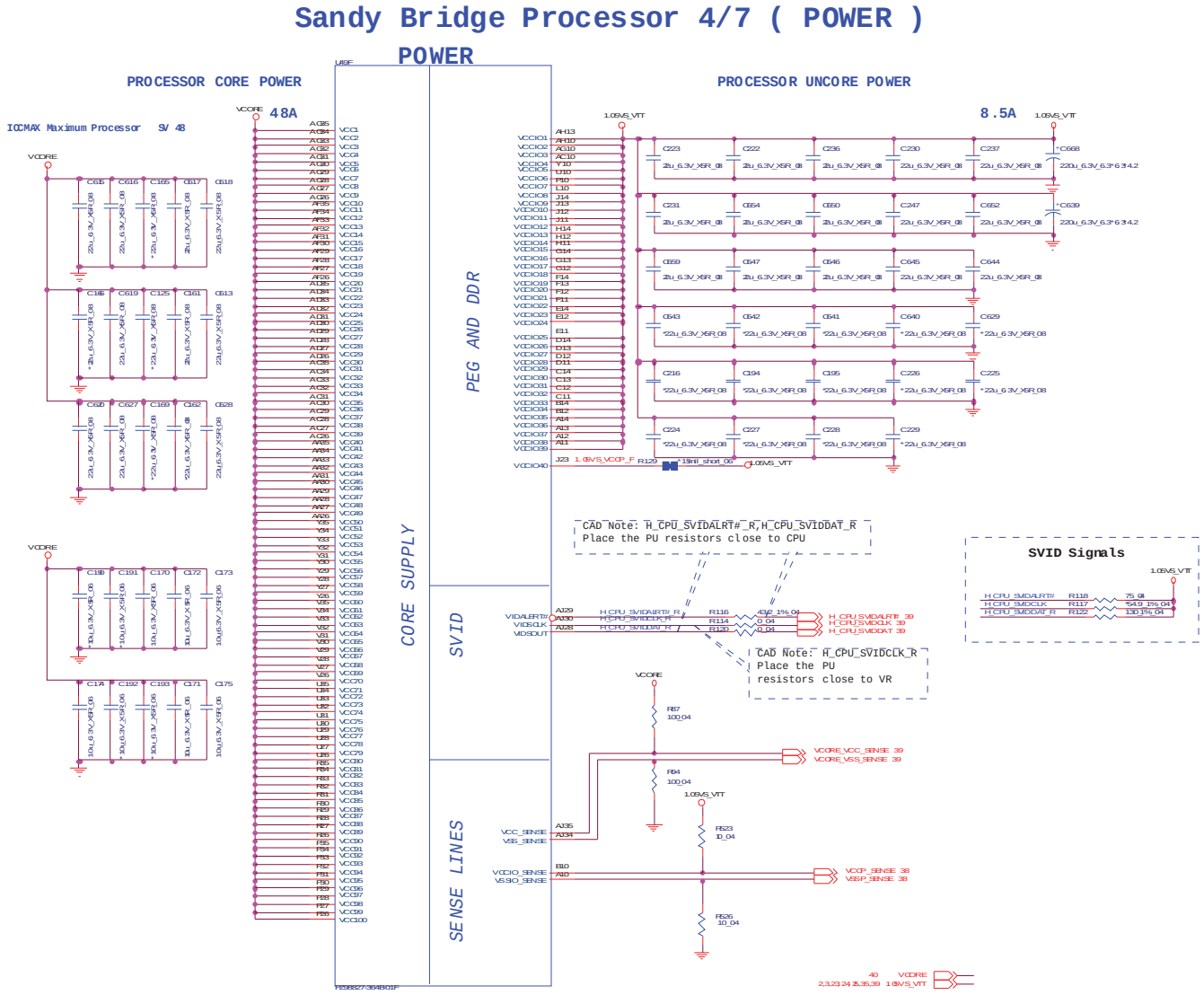

Sheet 5 of 49
Sandy Bridge
Processor 4/7

http://hobi-elektronika.net

Sandy Bridge Processor 5/7

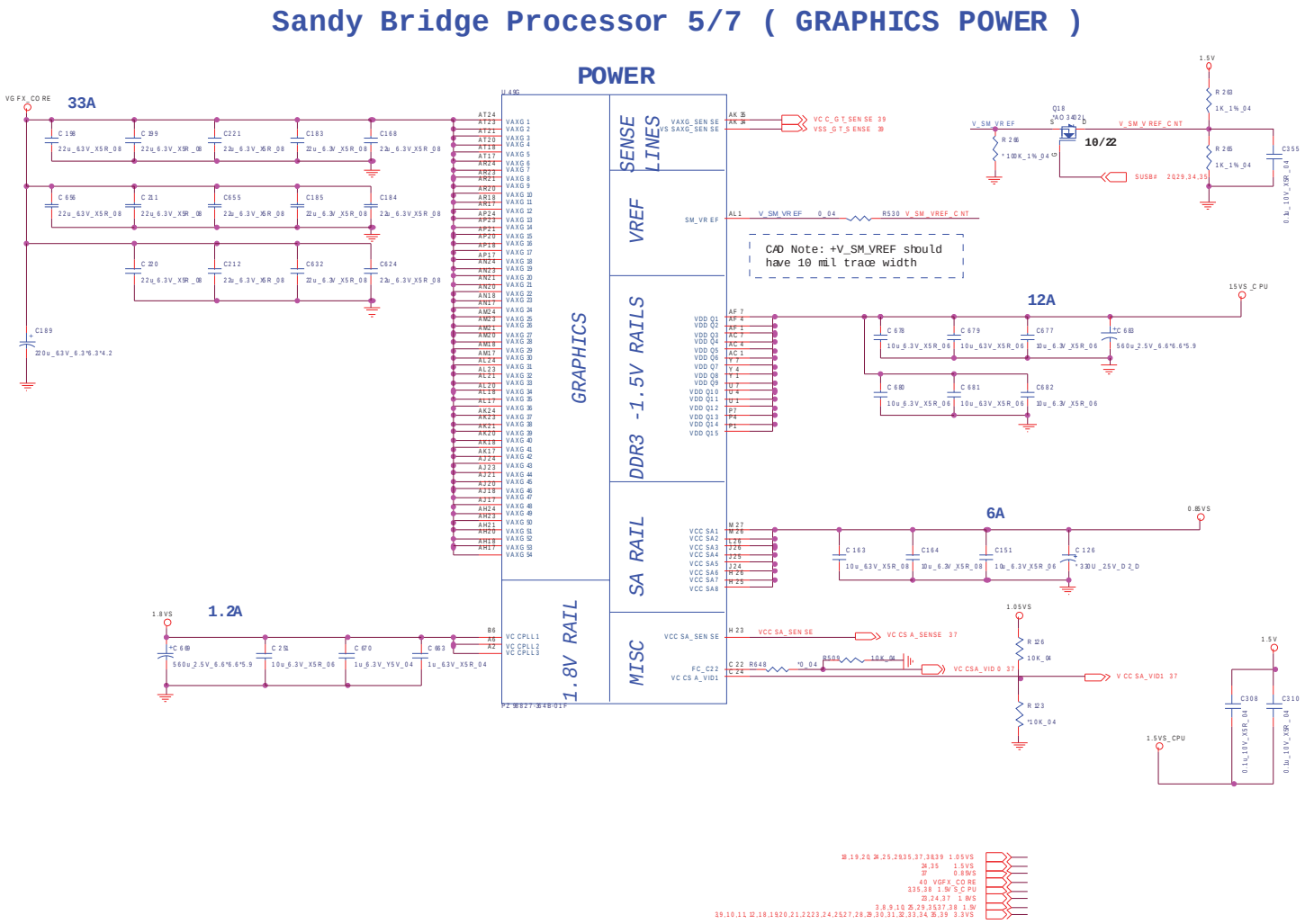

Sheet 6 of 49
Sandy Bridge
Processor 5/7

http://hobi-elektronika.net

Sandy Bridge Processor 6/7

Sandy Bridge Processor 6/7 (GND)

Sheet 7 of 49
Sandy Bridge Processor 6/7

CAD Note: 0 ohm resistor should be placed close to CPU

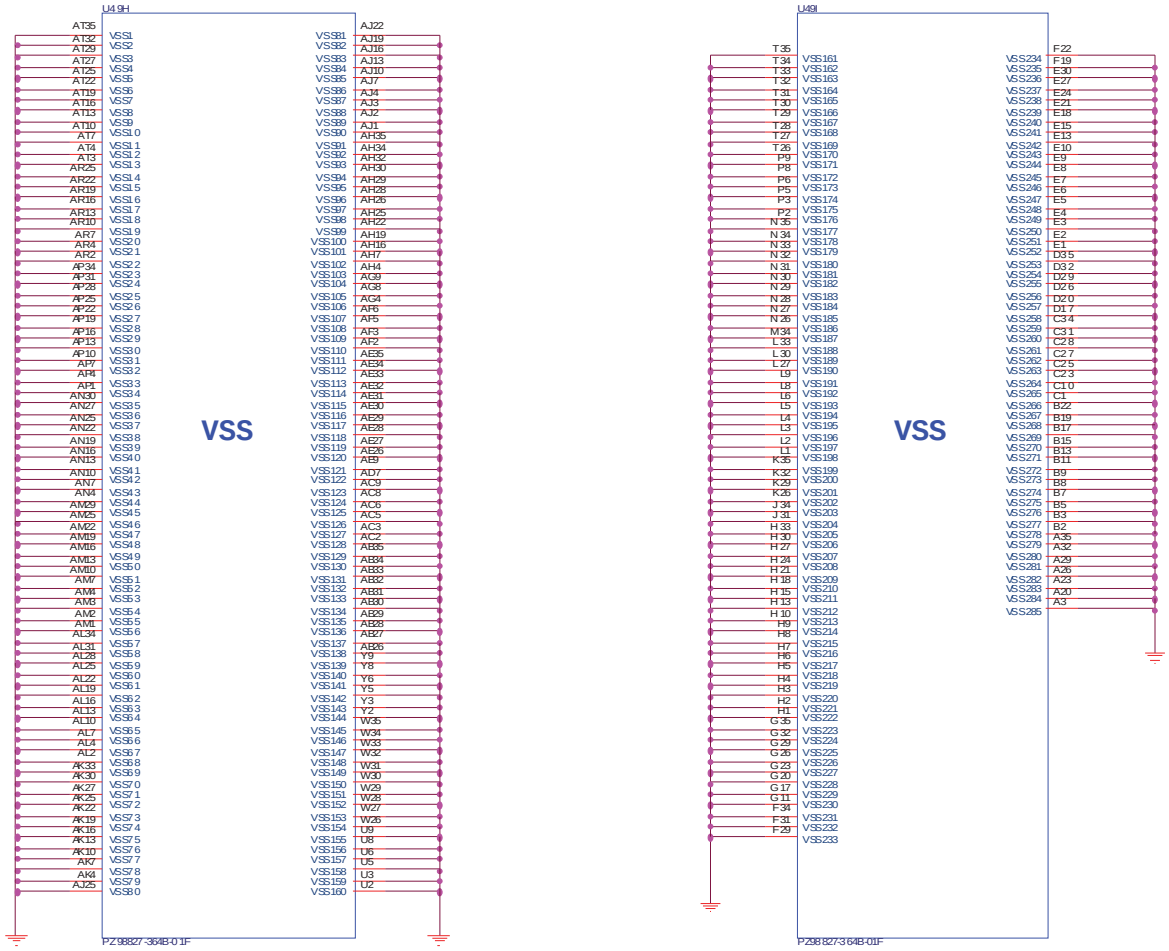

http://hobi-elektronika.net

Sandy Bridge Processor 7/7

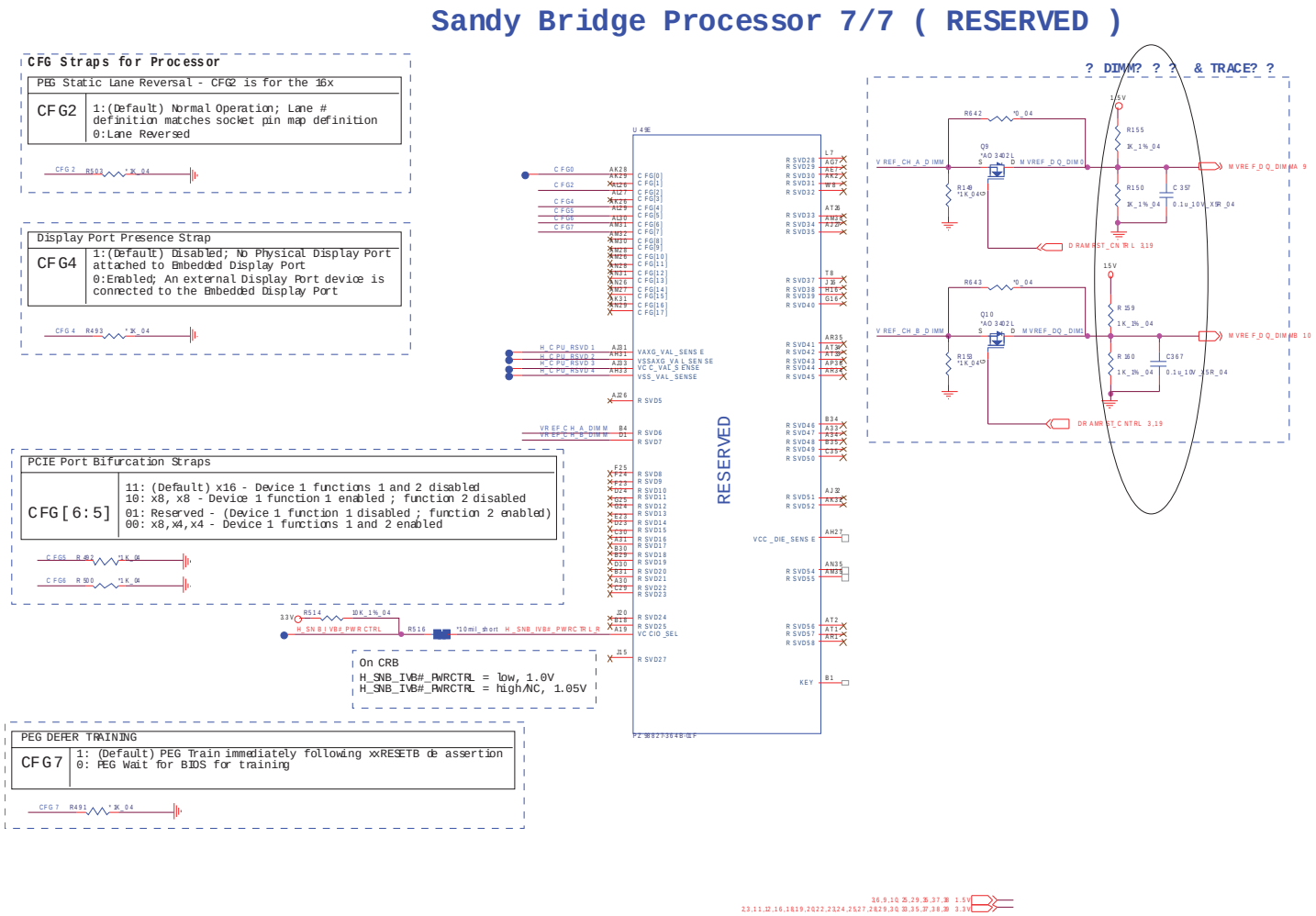

Sheet 8 of 49
Sandy Bridge
Processor 7/7

http://hobi-elektronika.net

DDR3 SO-DIMM_0

SO-DIMM A

CHANGE TO STANDARD

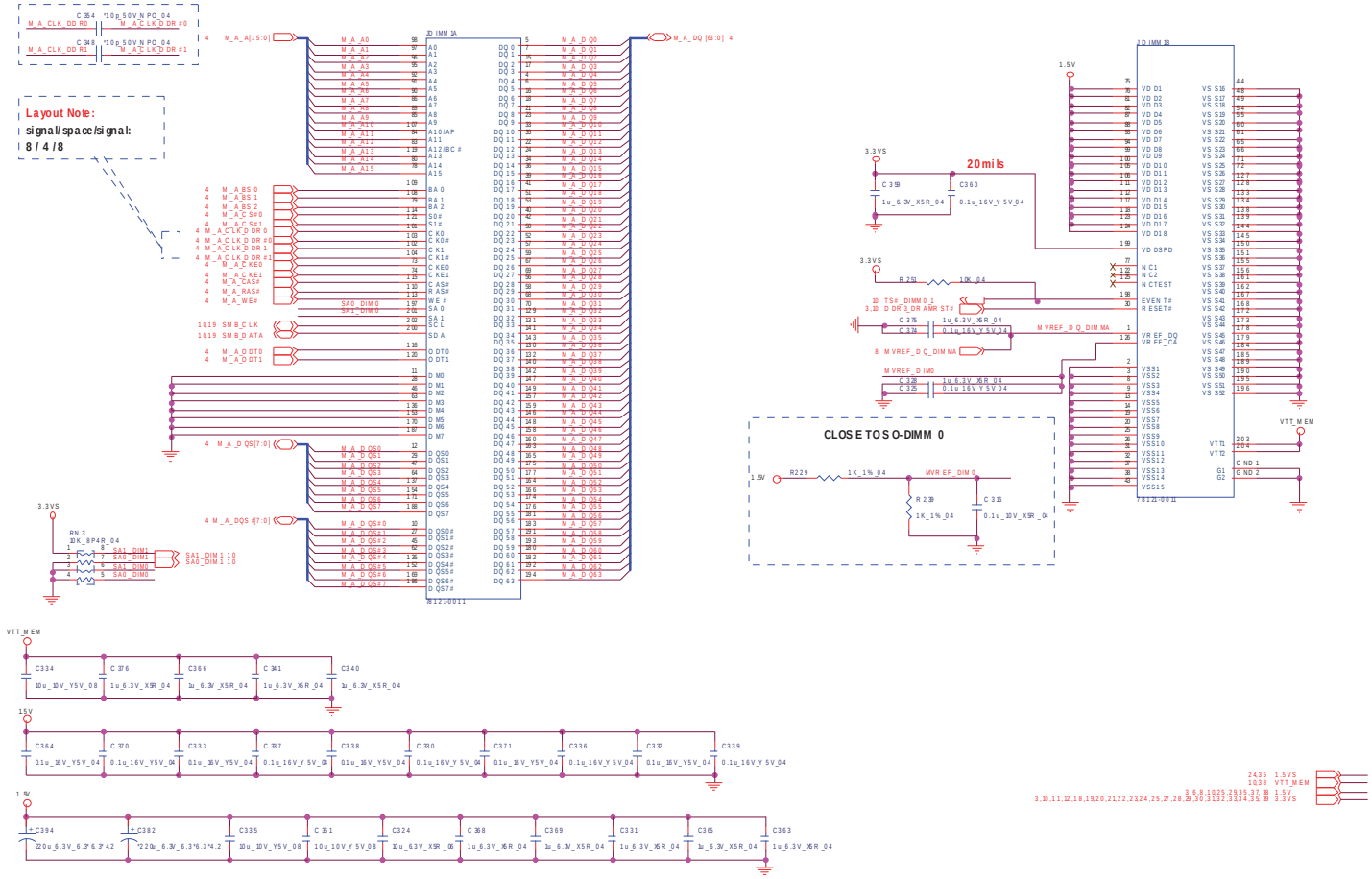

Sheet 9 of 49
DDR3 SO-DIMM_0

http://hobi-elektronika.net

DDR3 SO-DIMM_1

SO-DIMM B

CHANGE TO STANDARD

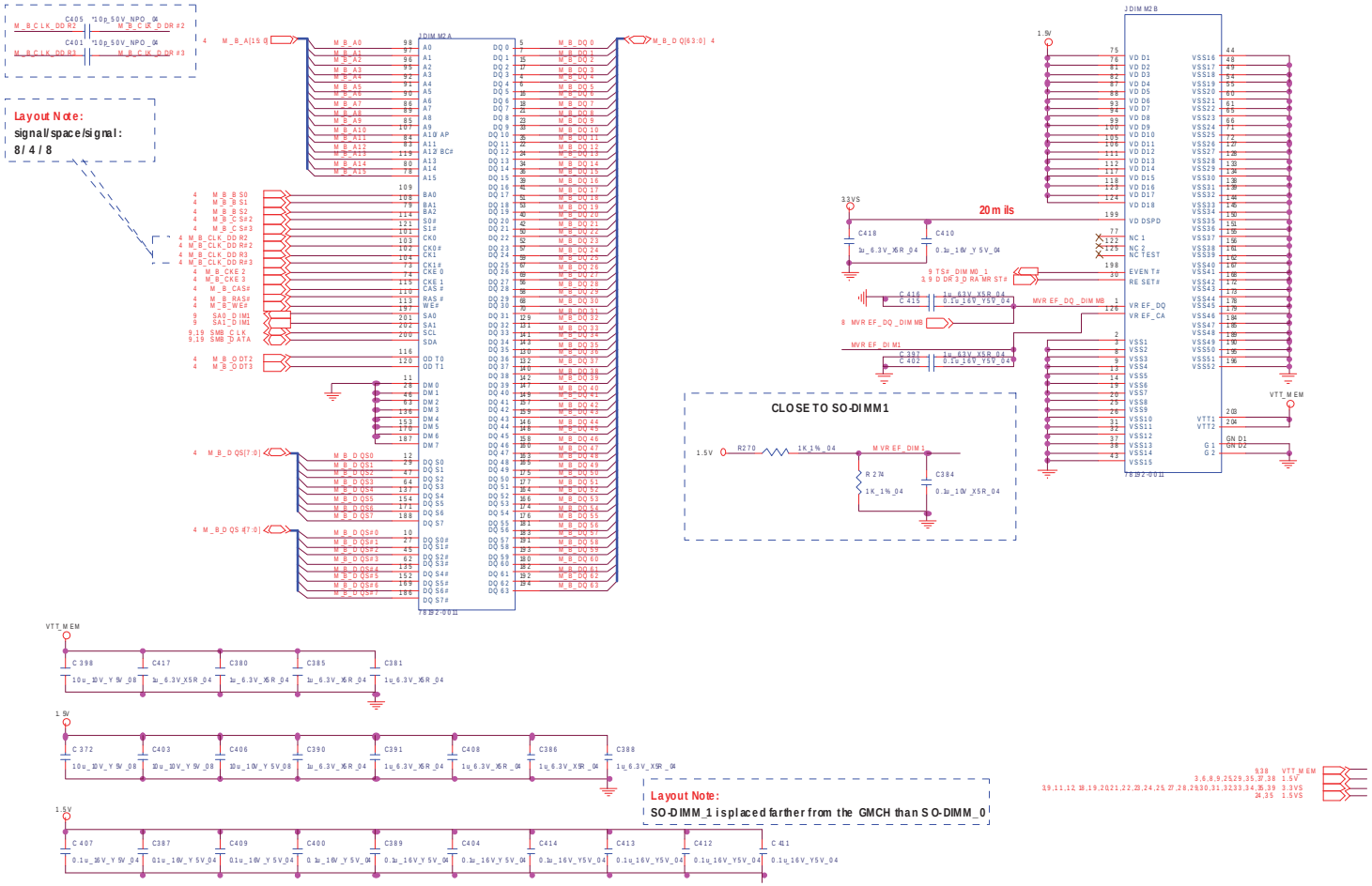

Sheet 10 of 49
DDR3 SO-DIMM_1

http://hobi-elektronika.net

Panel, Inverter, CRT

Sheet 11 of 49
Panel, Inverter, CRT

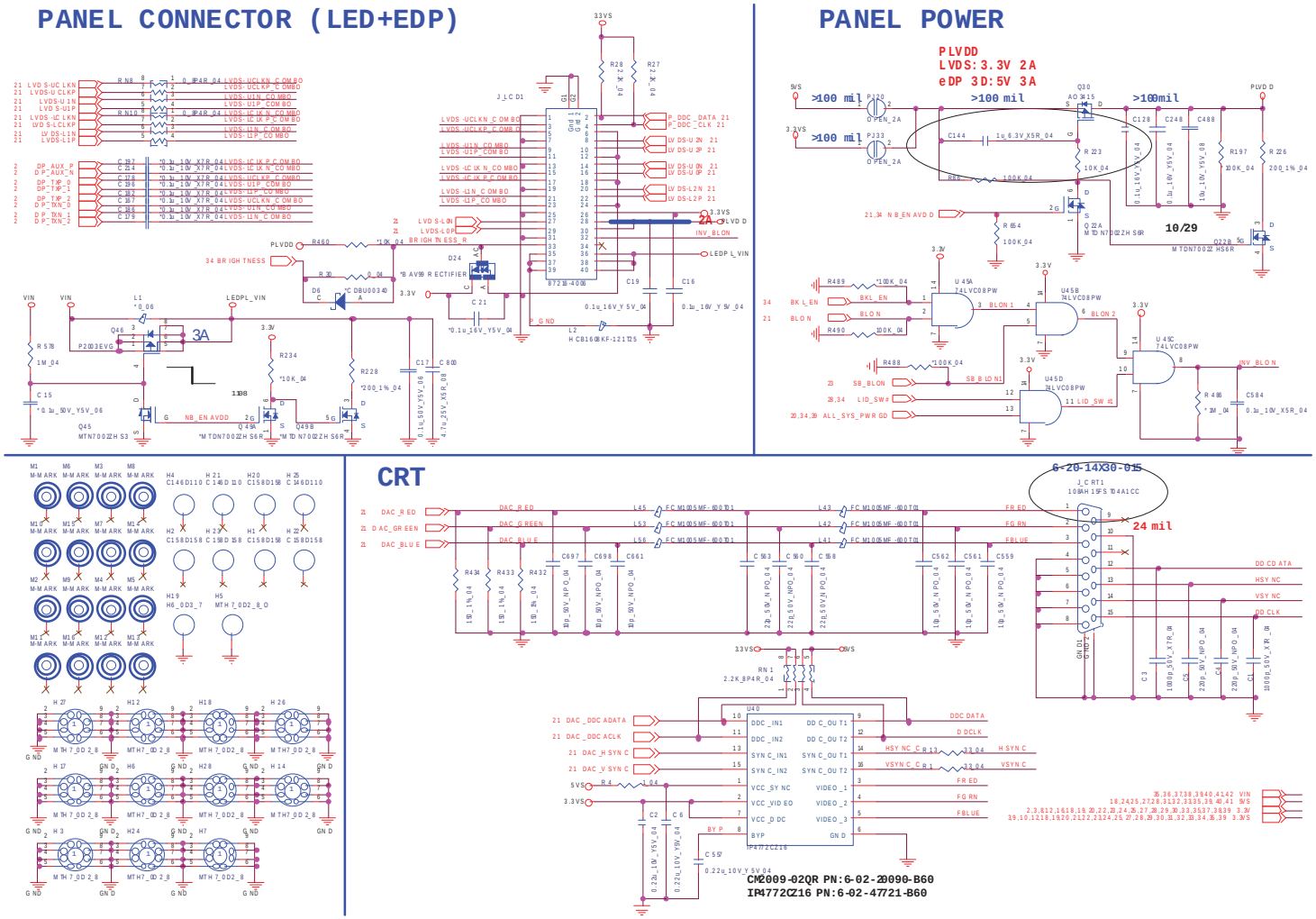

http://hobi-elektronika.net

VGA PCI-E Interface

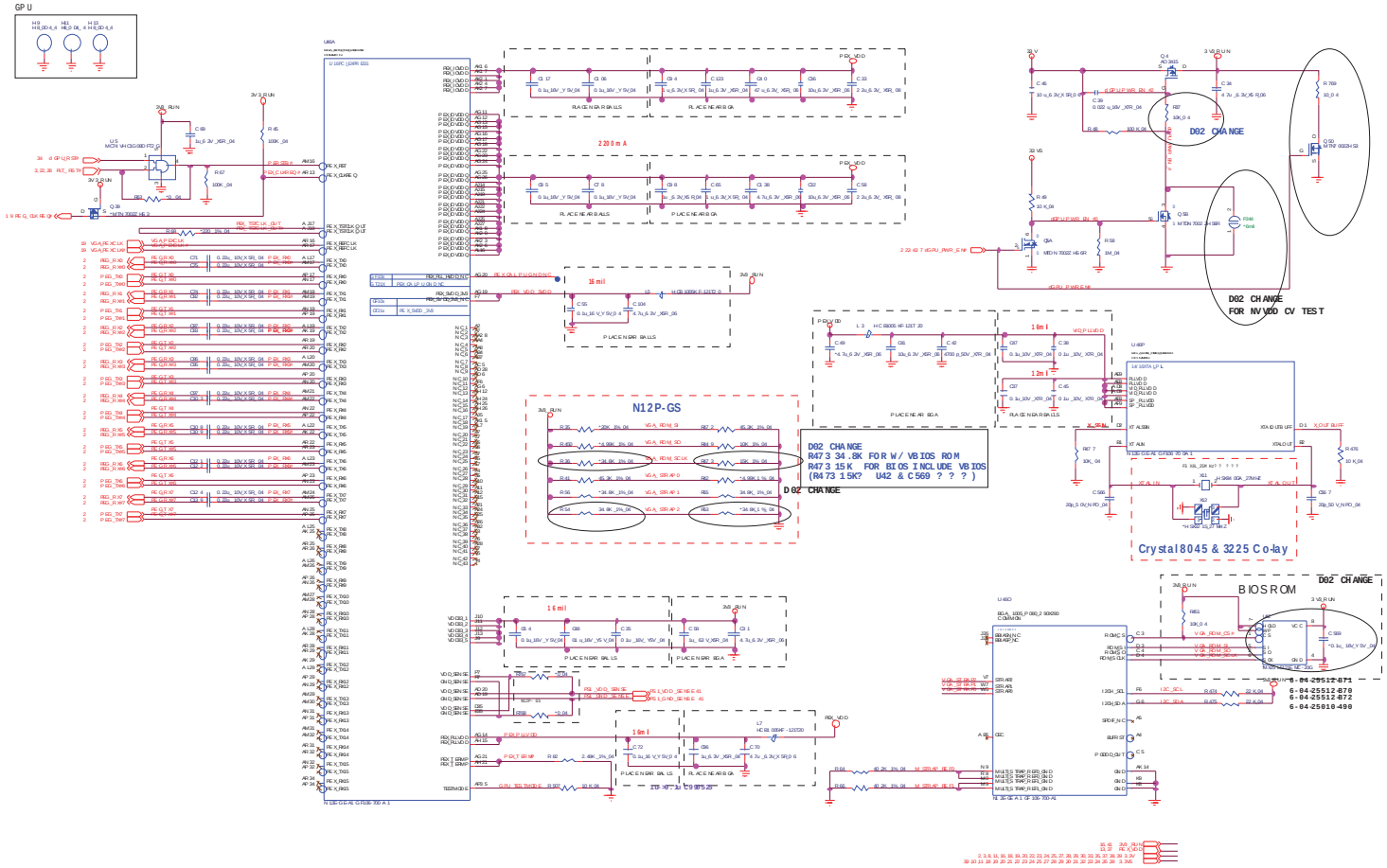

Sheet 12 of 49
VGA PCI-E
Interface

http://hobi-elektronika.net

VGA Frame Buffer Interface

Sheet 13 of 49
VGA Frame Buffer Interface

Frame Buffer Interface

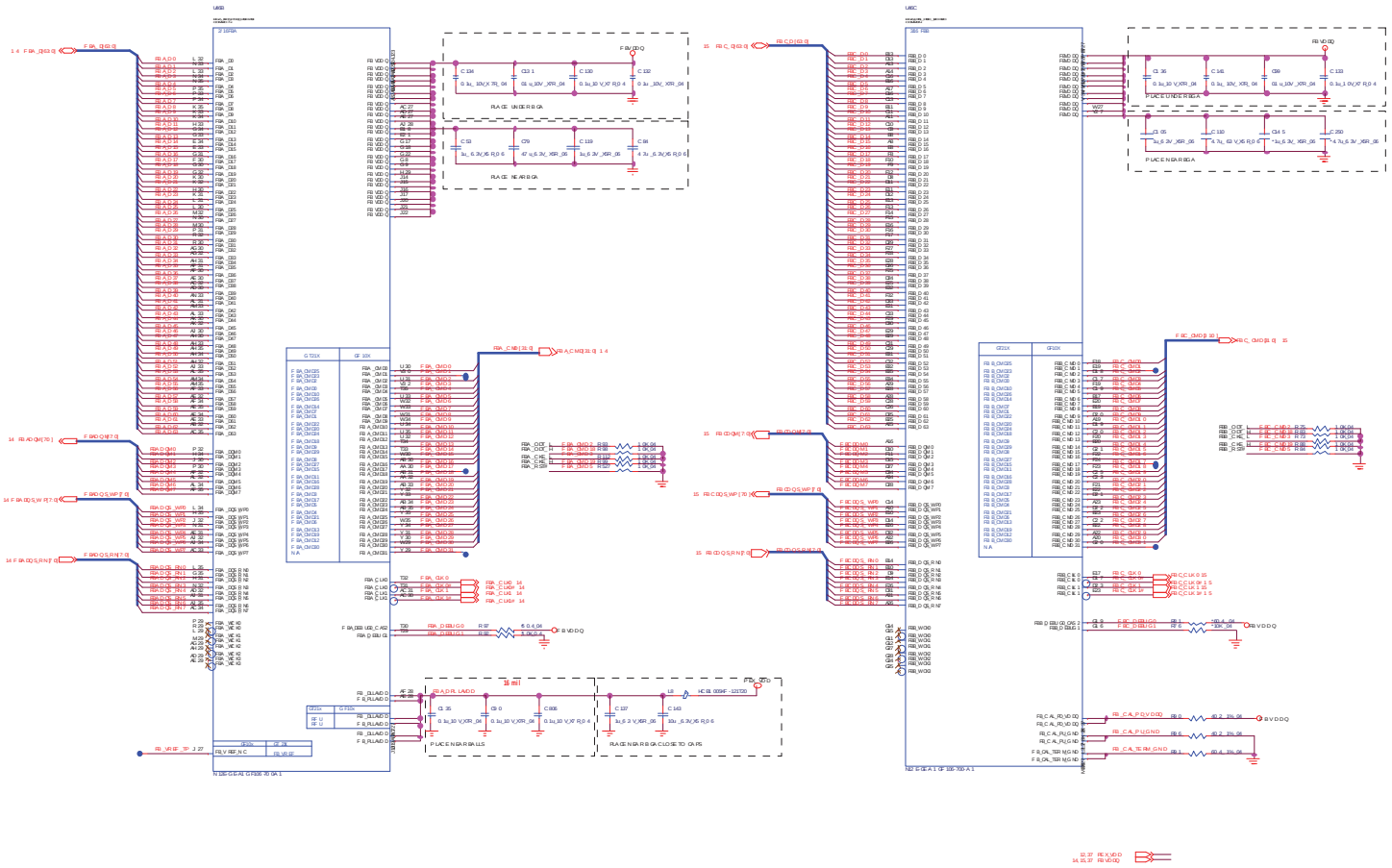

http://hobi-elektronika.net

VGA Frame Buffer A

Frame Buffer Partition A

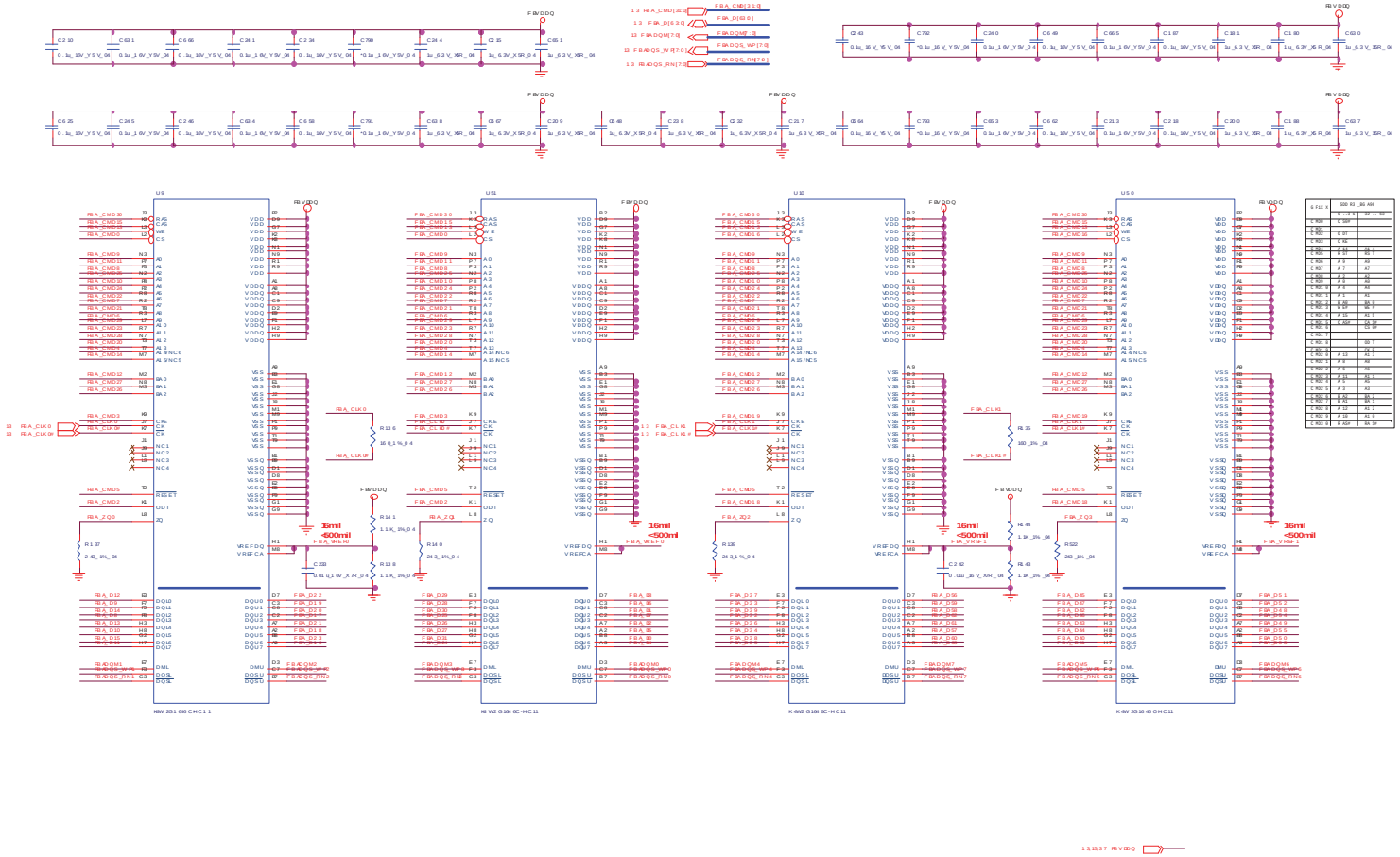

Sheet 14 of 49
VGA Frame Buffer
A

http://hobi-elektronika.net

VGA Frame Buffer B

Frame Buffer Partition B

Sheet 15 of 49
VGA Frame Buffer B

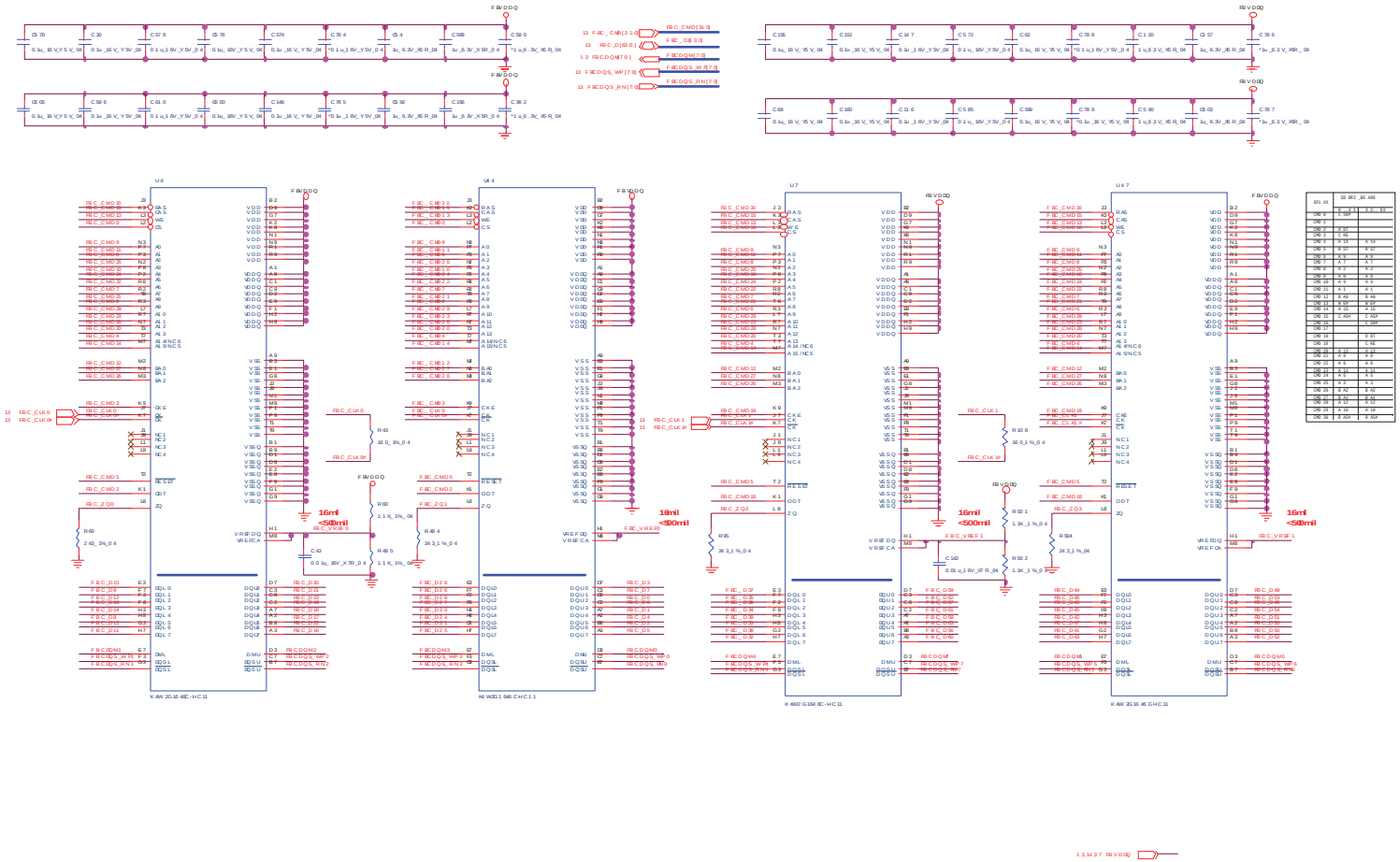

http://hobi-elektronika.net

VGA I/O

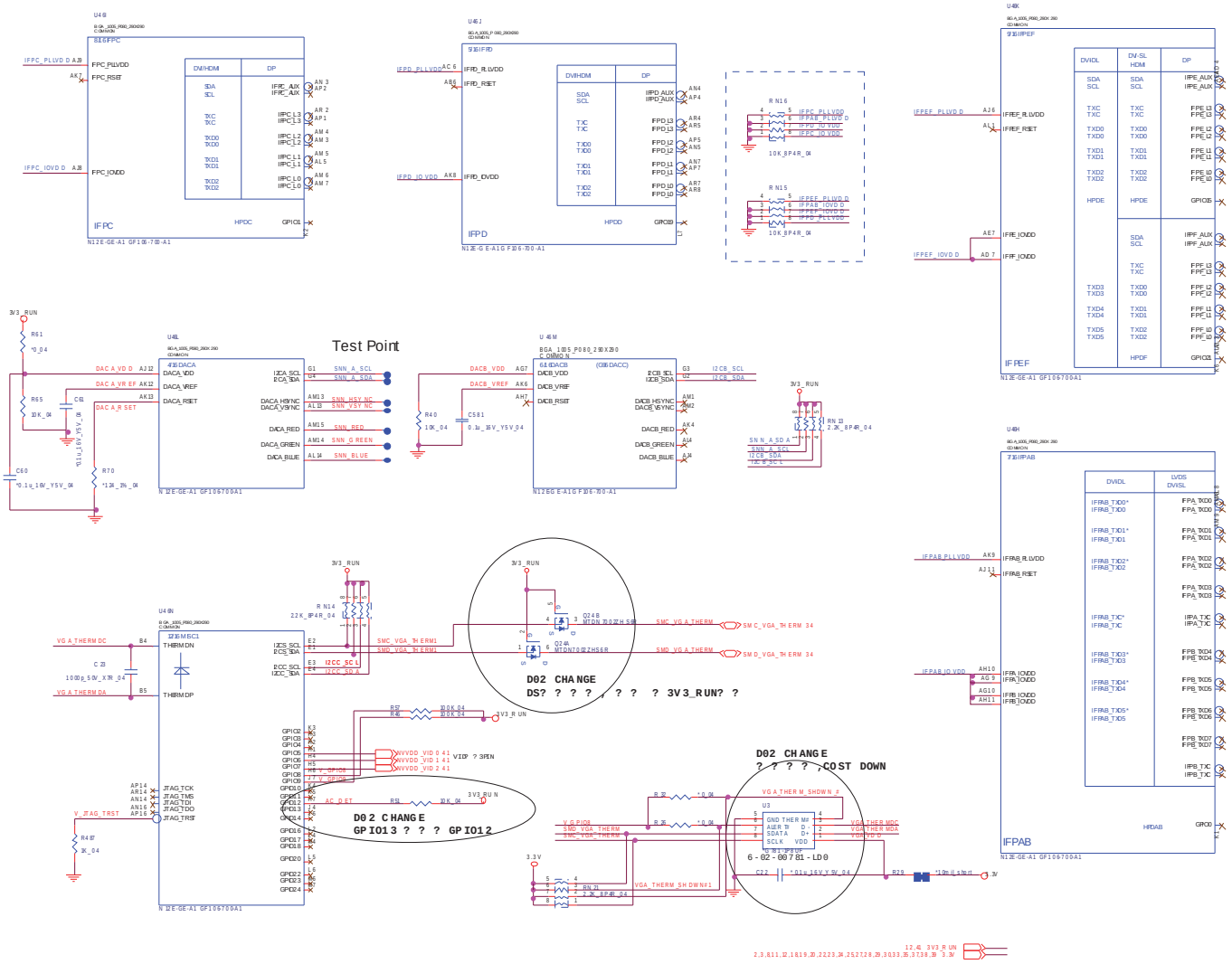

Sheet 16 of 49
VGA I/O

http://hobi-elektronika.net

VGA NVVDD Cecoupling

Sheet 17 of 49
VGA NVVDD Cecoupling

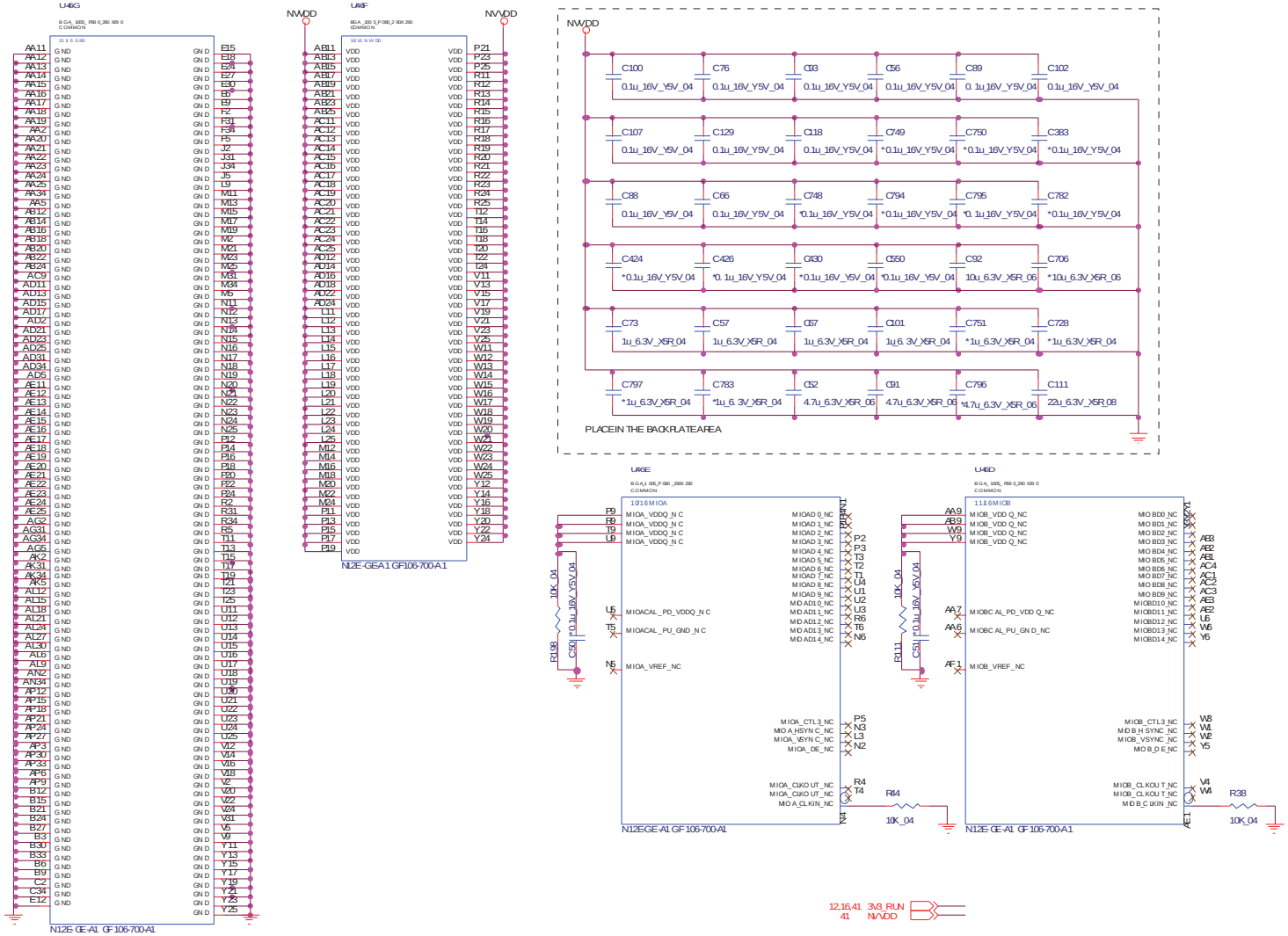

http://hobi-elektronika.net

CougarPoint - M 1/9

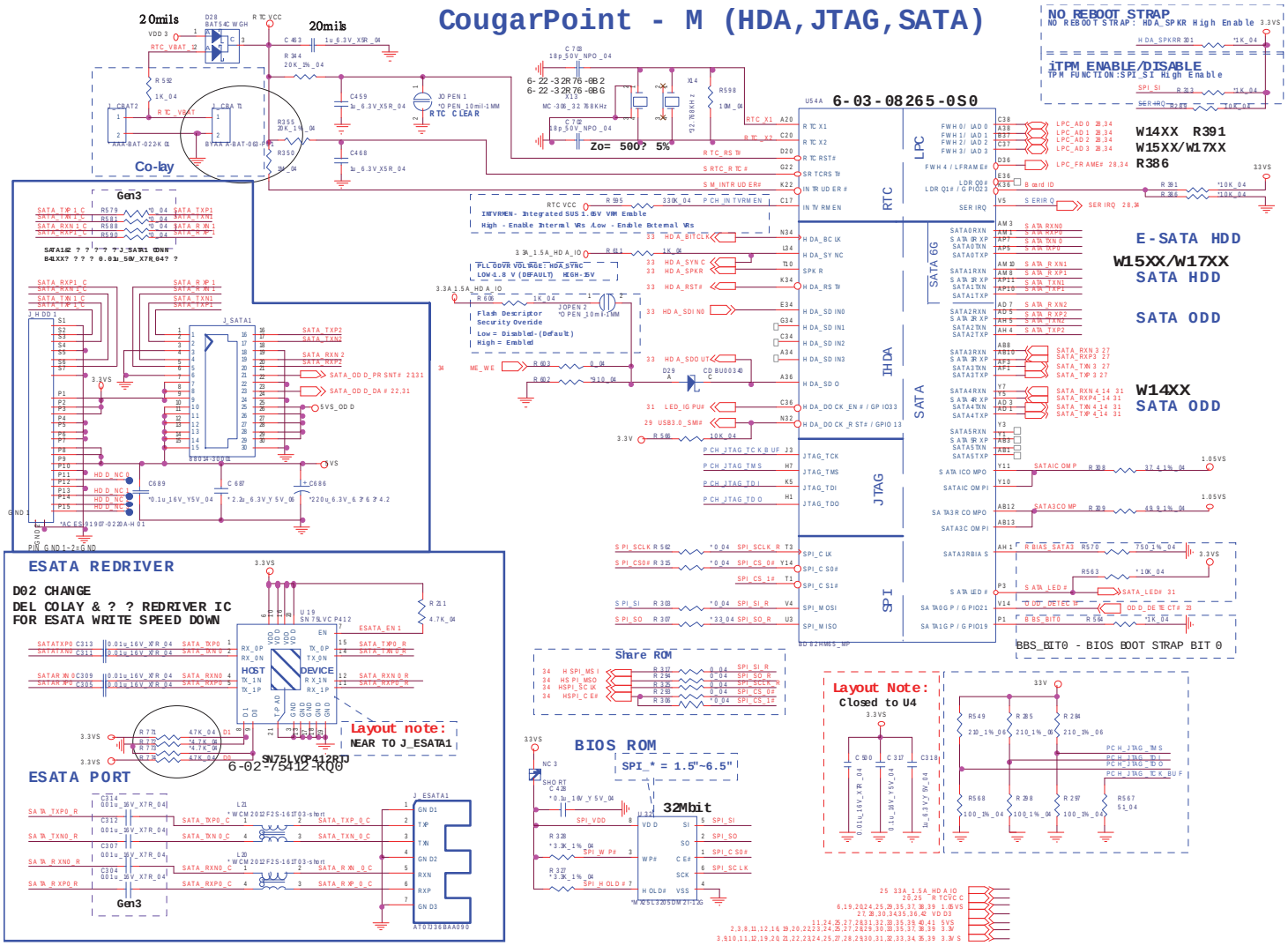

Sheet 18 of 49
CougarPoint - M 1/9

http://hobi-elektronika.net

CougarPoint - M 2/9

Sheet 19 of 49
CougarPoint - M 2/9

CougarPoint - M (PCI-E,SMBUS,CLK)

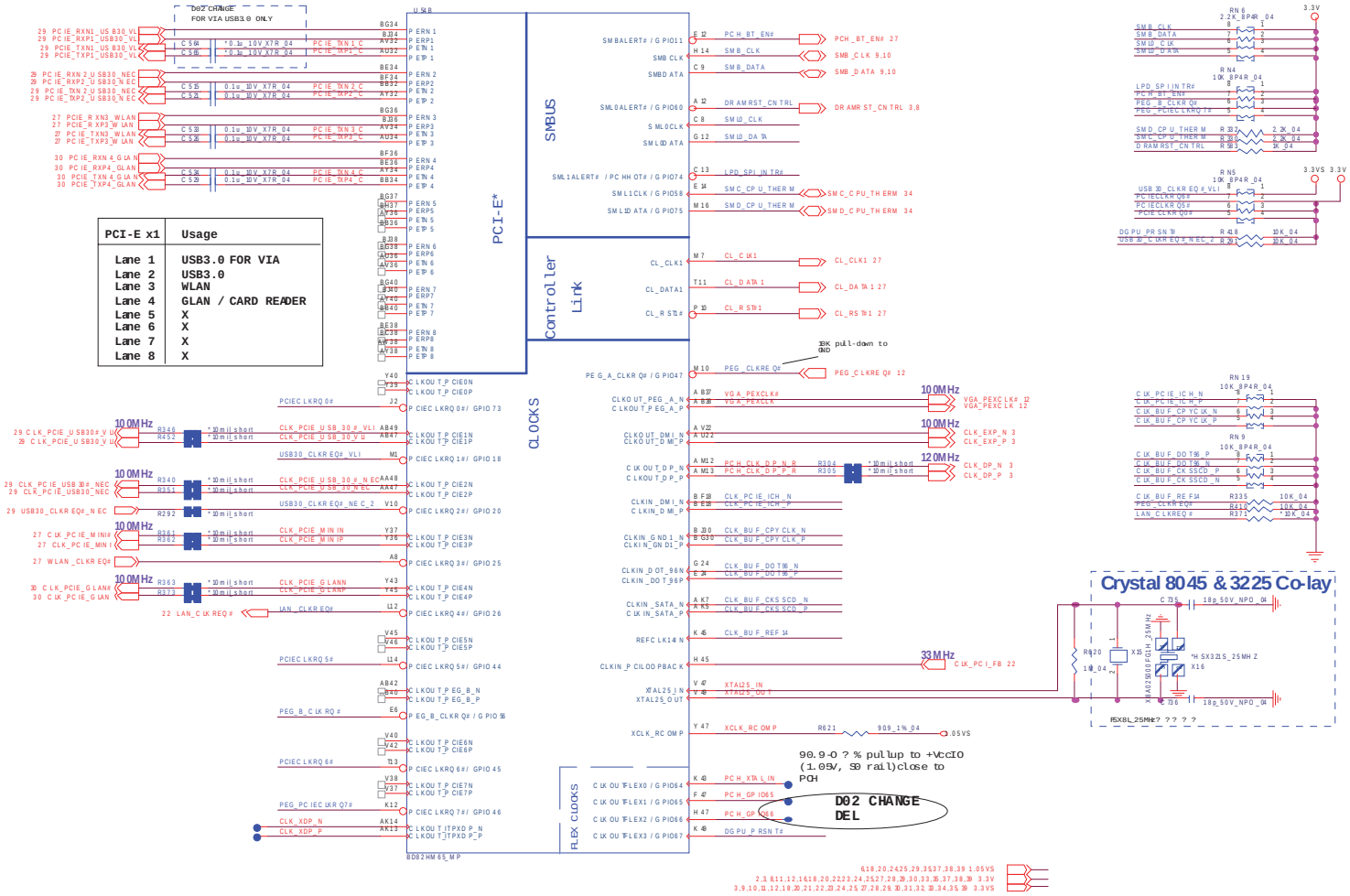

http://hobi-elektronika.net

CougarPoint - M 3/9

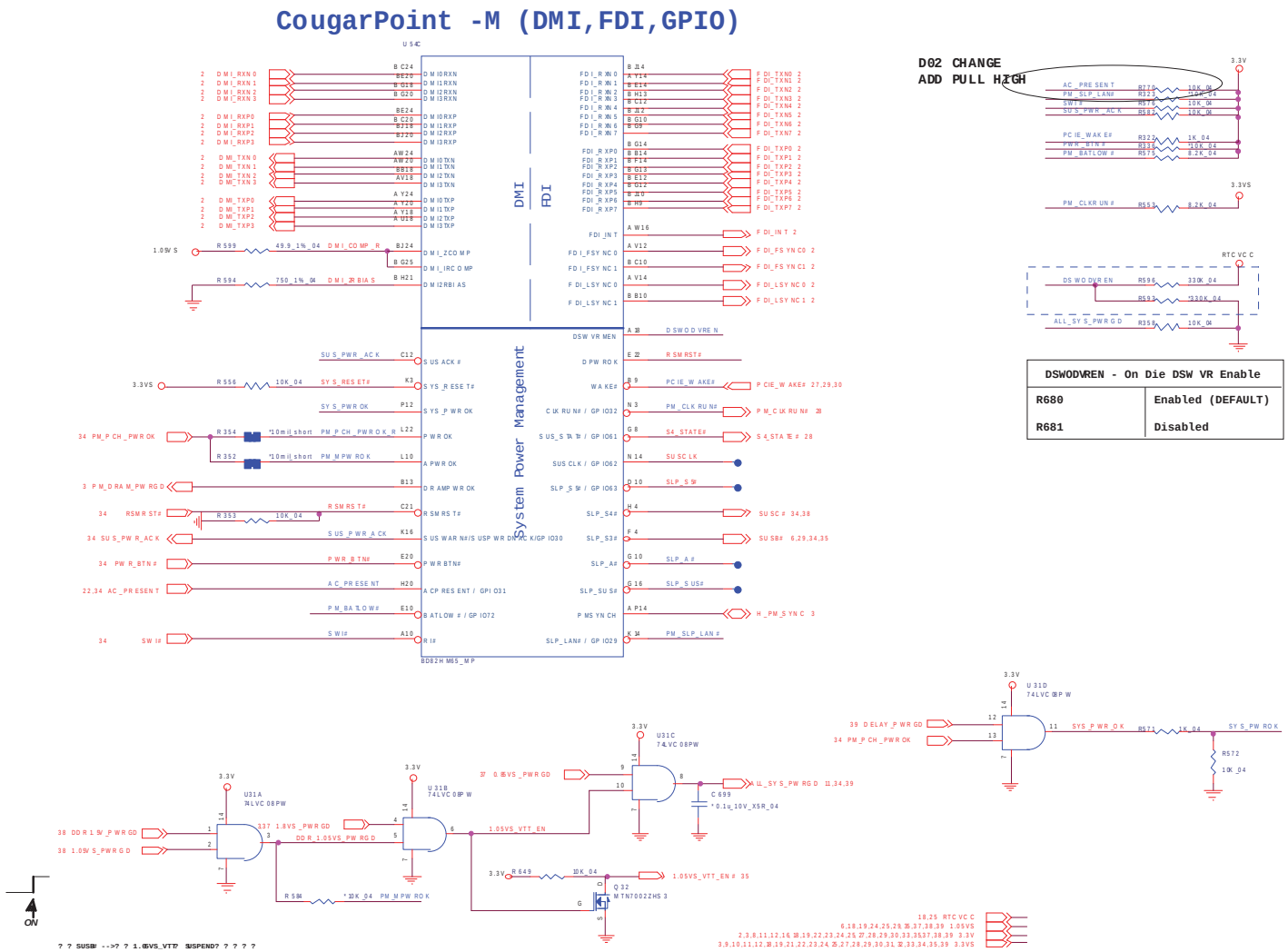

Sheet 20 of 49
CougarPoint - M 3/9

http://hobi-elektronika.net

CougarPoint - M 4/9

Sheet 21 of 49
CougarPoint - M 4/9

CougarPoint -M (LVDS,DDI)

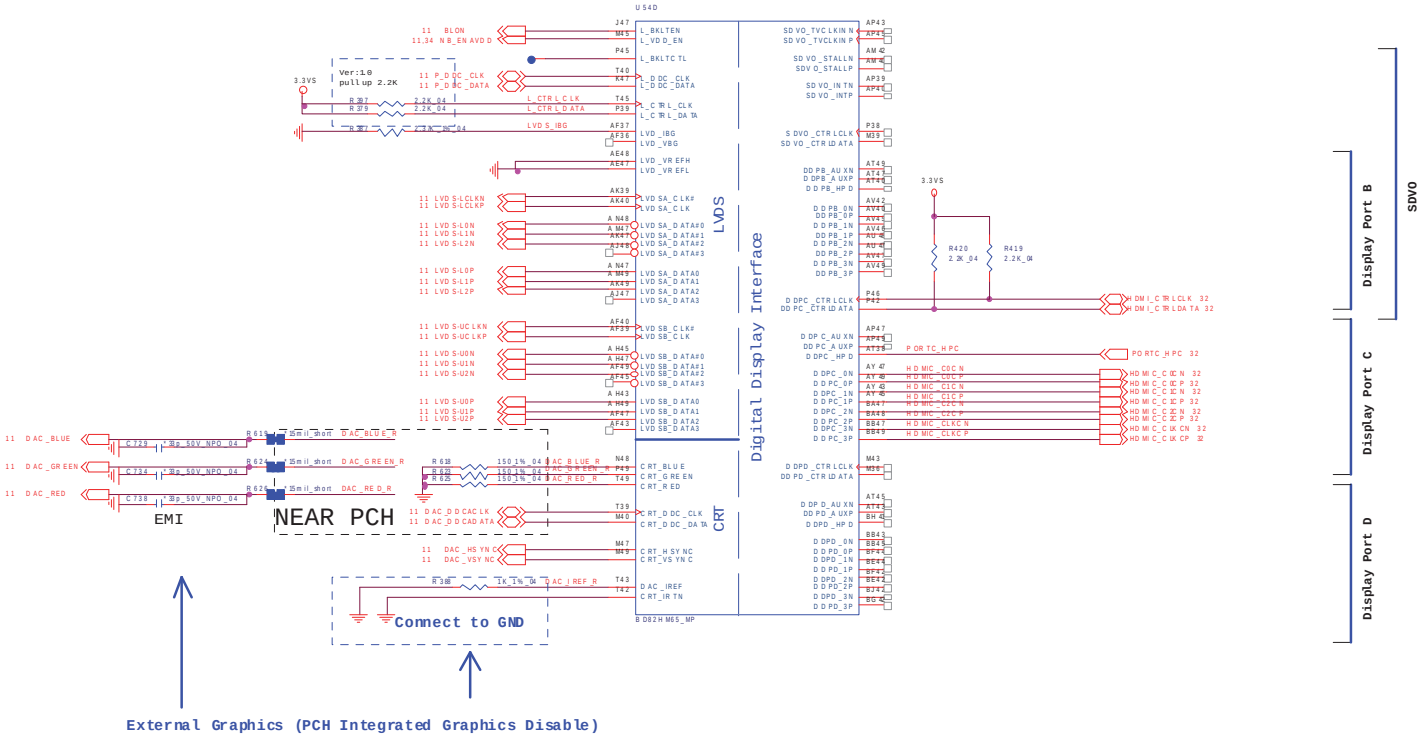

http://hobi-elektronika.net

CougarPoint - M 5/9

CougarPoint -M (PCI,USB,NVRAM)

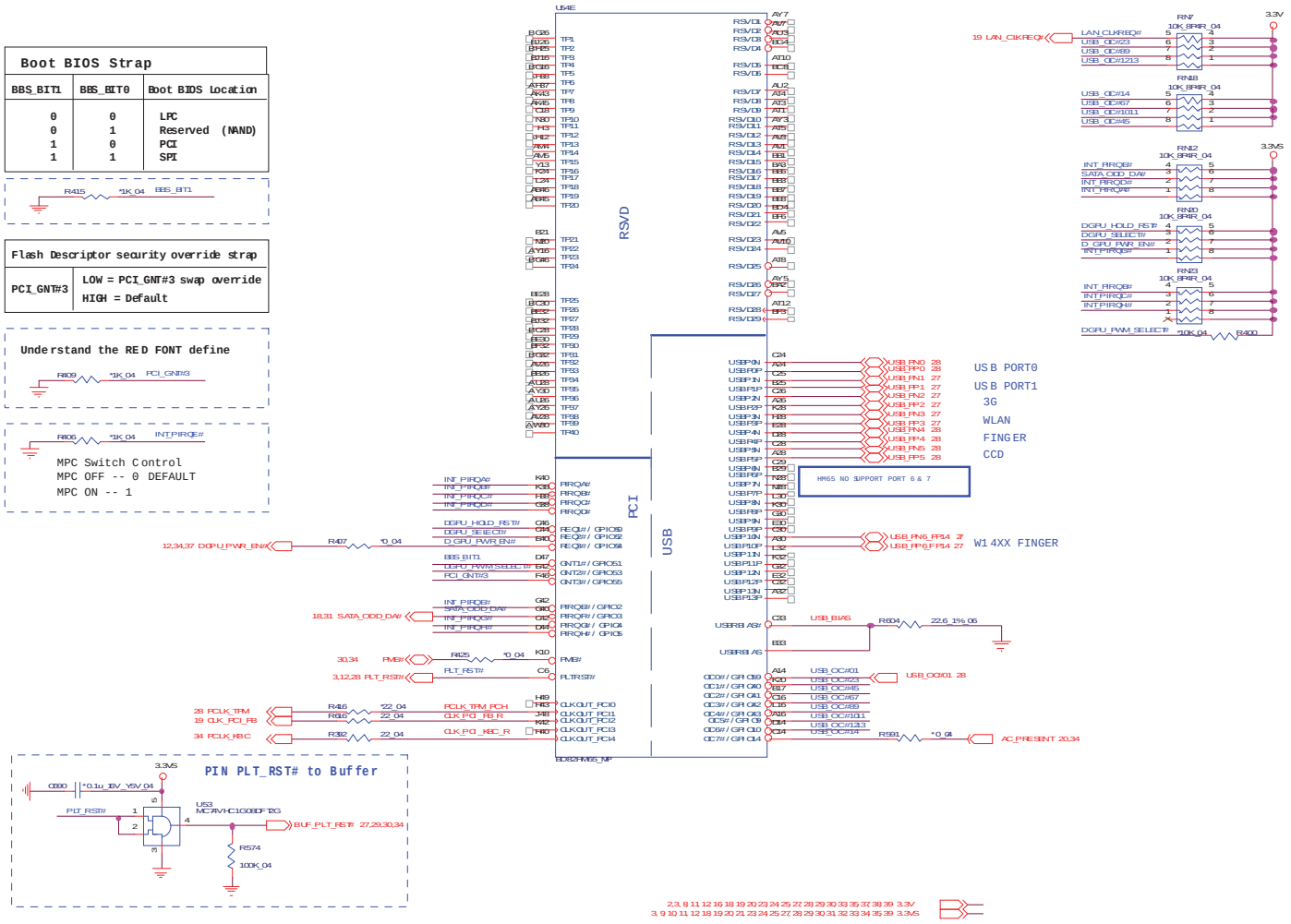

Sheet 22 of 49
CougarPoint - M 5/9

http://hobi-elektronika.net

CougarPoint - M 6/9

Sheet 23 of 49
CougarPoint - M 6/9

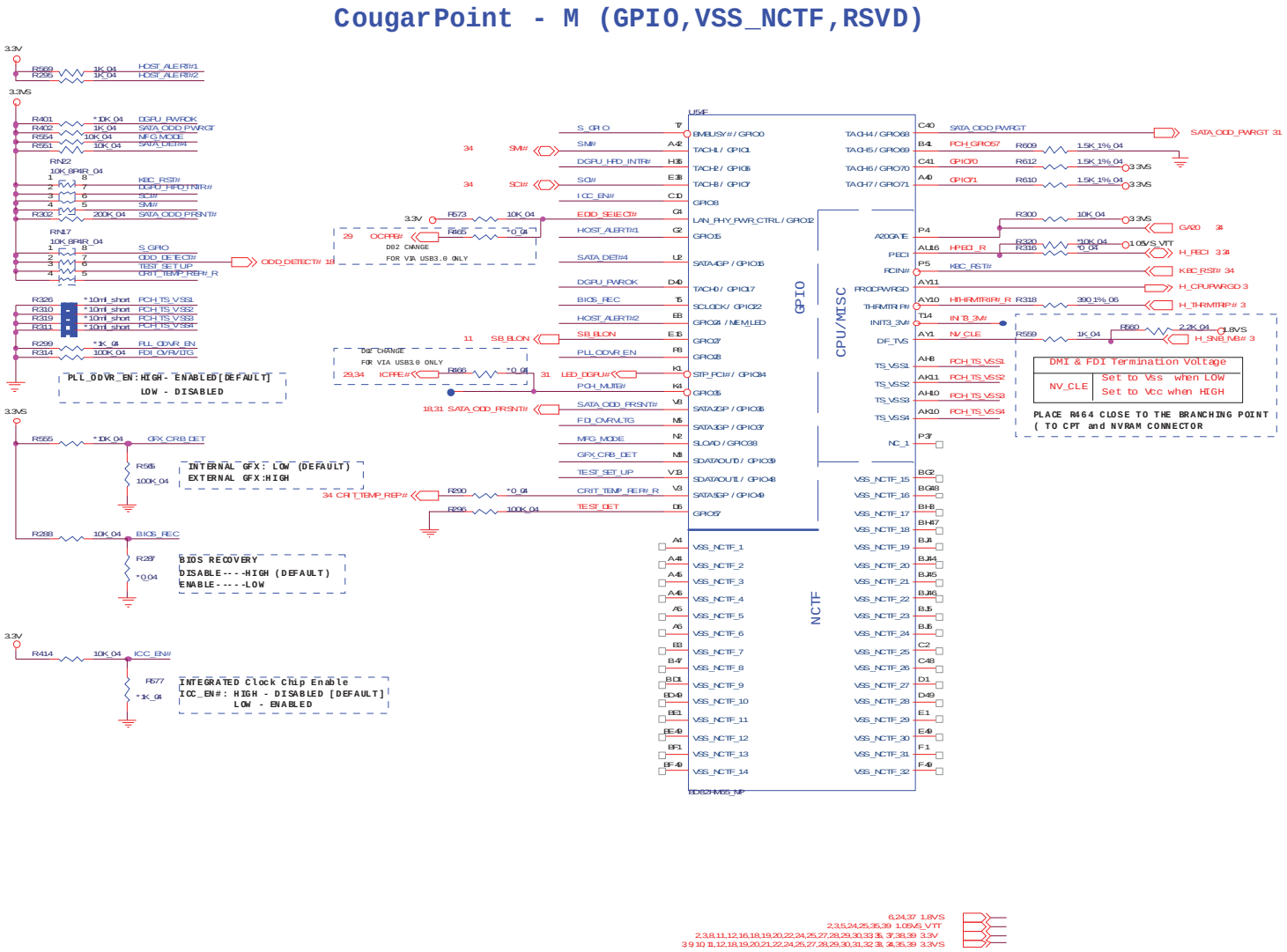

http://hobi-elektronika.net

CougarPoint - M 7/9

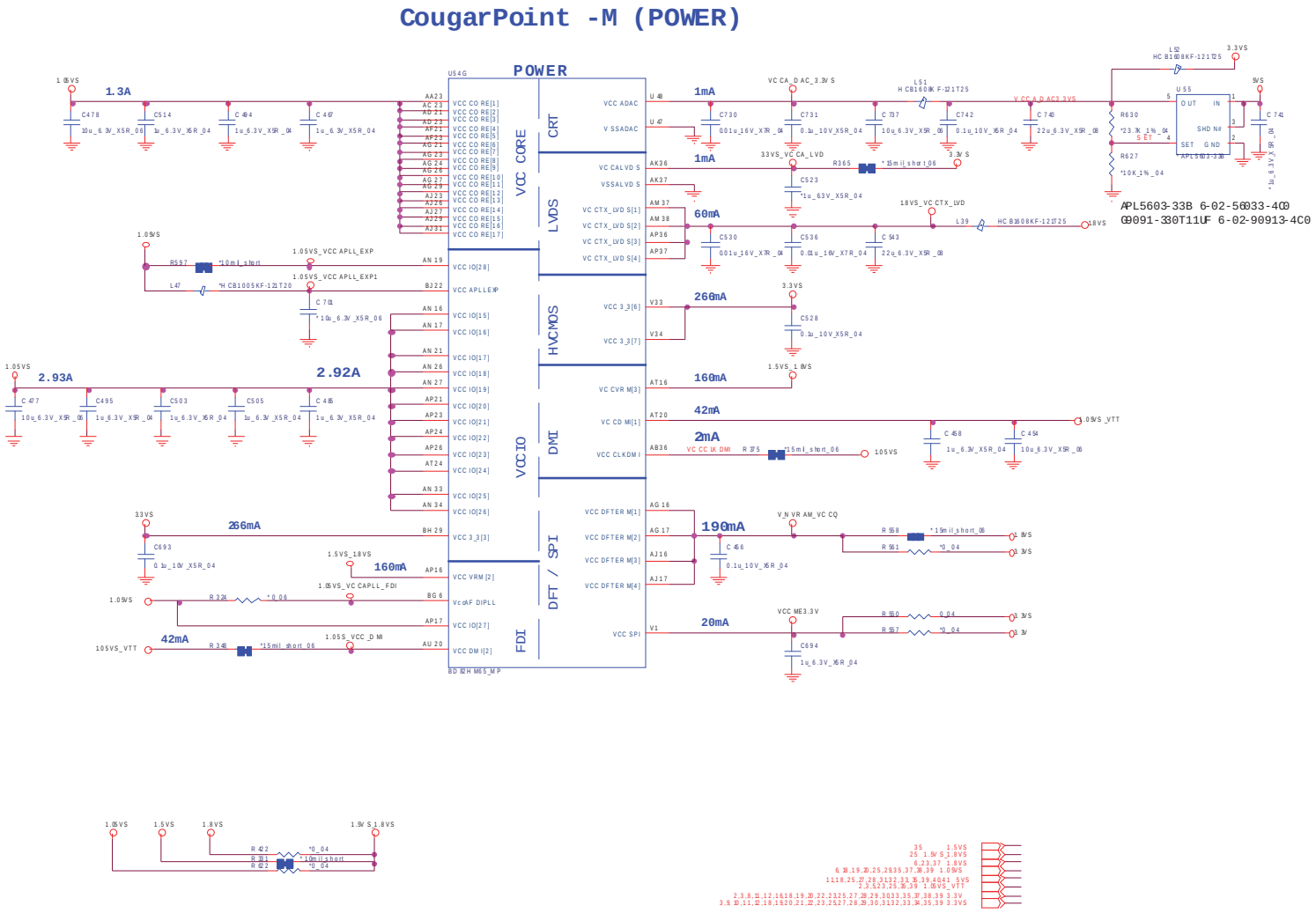

Sheet 24 of 49
CougarPoint - M 7/9

http://hobi-elektronika.net

CougarPoint - M 8/9

Sheet 25 of 49
CougarPoint - M 8/9

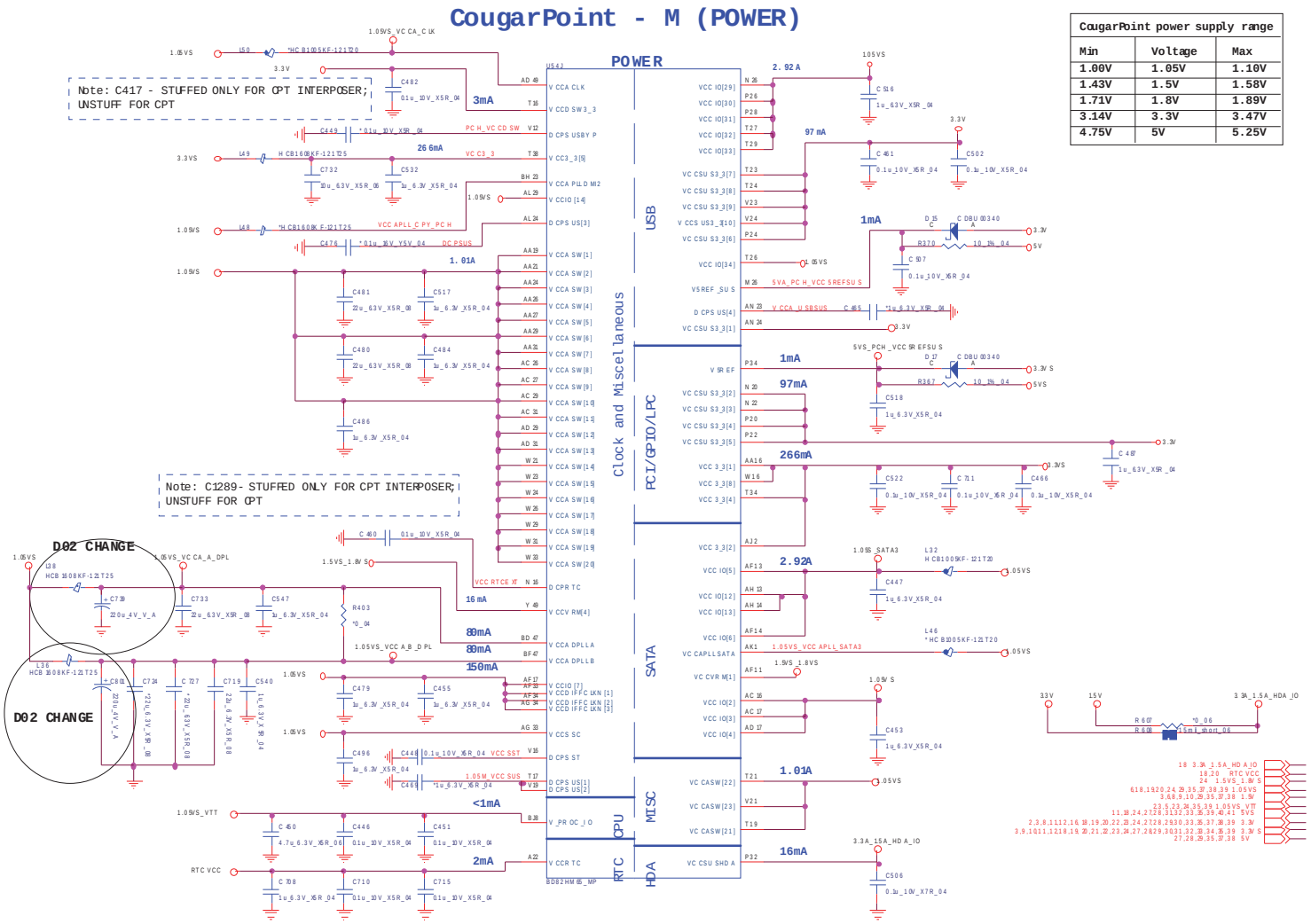

CougarPoint power supply range		
Min	Voltage	Max
1.00V	1.05V	1.10V
1.43V	1.5V	1.58V
1.71V	1.8V	1.89V
3.14V	3.3V	3.47V
4.75V	5V	5.25V

http://hobi-elektronika.net

CougarPoint - M 9/9

CougarPoint -M (GND)

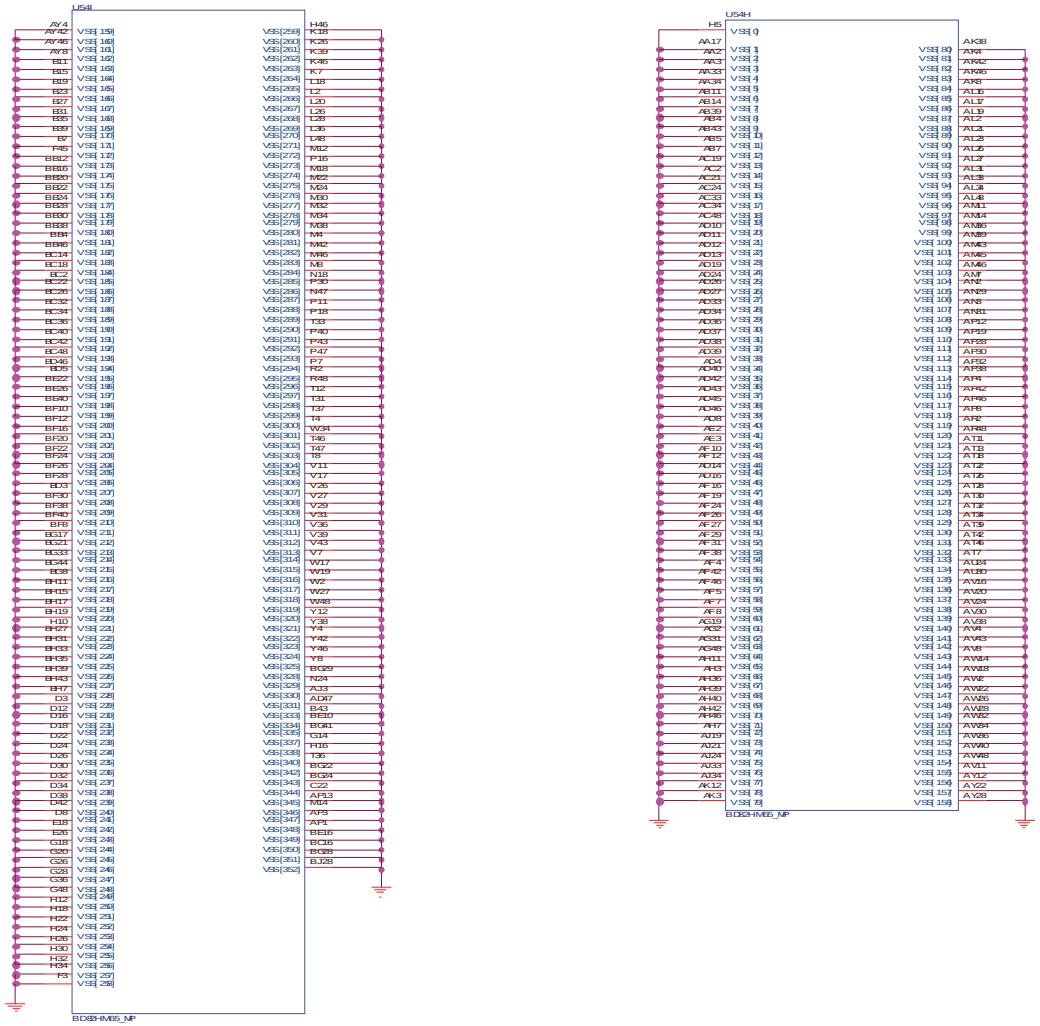

Voltage Rail	Voltage	S0 Iccmax Current (A)
V_CPU_IO	1.05	1 (mA)
VSREF	5	1 (mA)
VSREF_Sus	5	1 (mA)
Vcc3_3	3.3	0.265
VccADAC3	1.05	1 (mA)
VccADPLLA	1.05	0.08
VccADPLLB	1.05	0.08
VccCore	1.05	1.3
VccDMI	1.1	0.042
VccIO	1.05	2.925
VccASW	1.05	1.01
VccSPI	3.3	0.020
VccDSW3_3	3.3	2 (mA)
VccDFTERM	1.8	0.19
VccSus3_3	3.3	0.097
VccSusHDA	3.3	1 (mA)
VccVRM	1.5	0.16
VccCLKDMI	1.05	0.02
VccSSC	1.05	0.095
VccDIFFCLKN	1.05	0.055
VccALVDS	3.3	1 (mA)
VccTX_LVDS	1.8	0.06

Sheet 26 of 49
CougarPoint - M 9/9

http://hobi-elektronika.net

WLAN, 3G, Mini PCIE

Sheet 27 of 49
WLAN, 3G, Mini PCIE

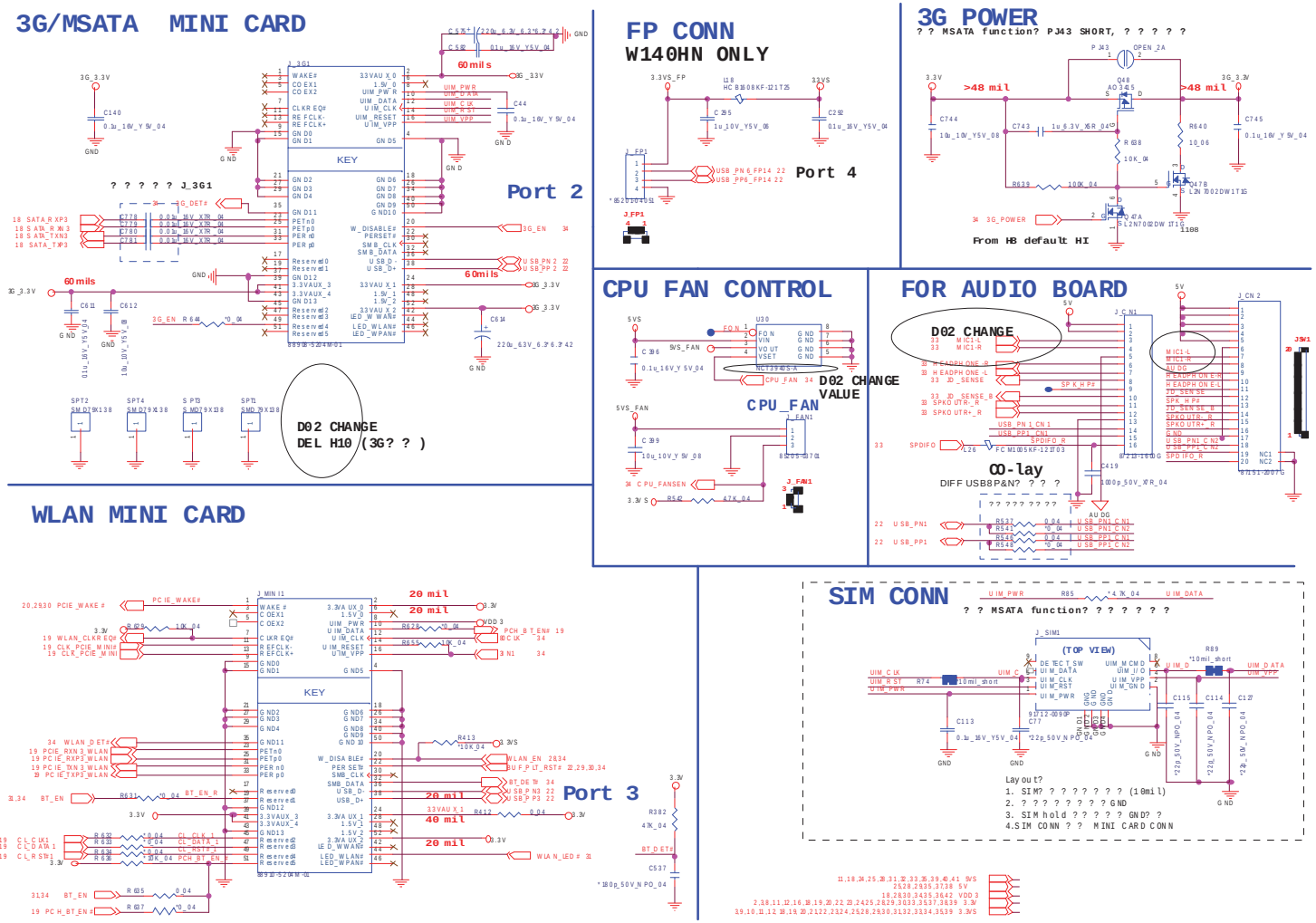

http://hobi-elektronika.net

USB, Fan, TP, FP, Multi-Conn

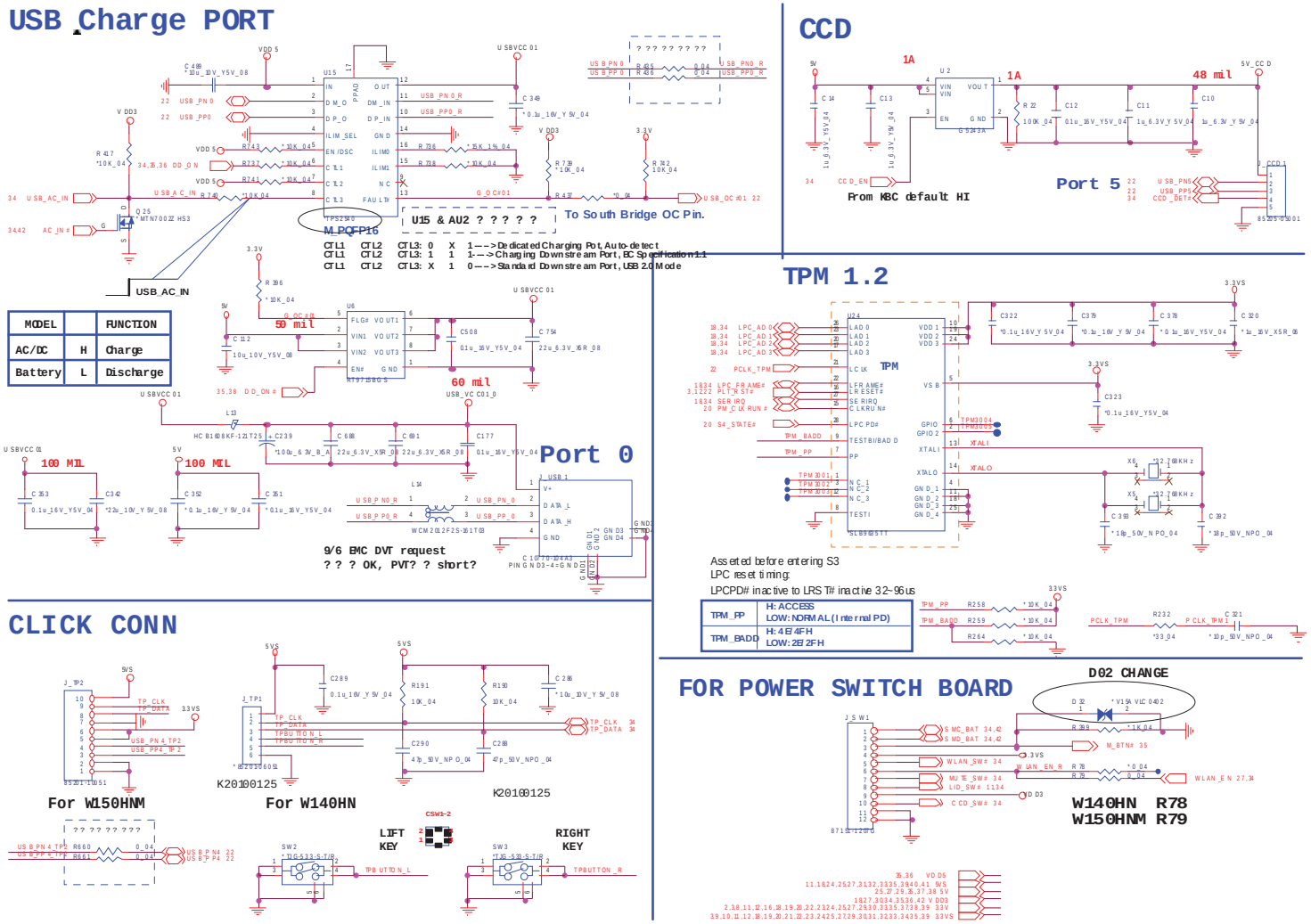

Sheet 28 of 49
USB, Fan, TP, FP, Multi-Conn

http://hobi-elektronika.net

USB 3.0

Sheet 29 of 49
USB 3.0

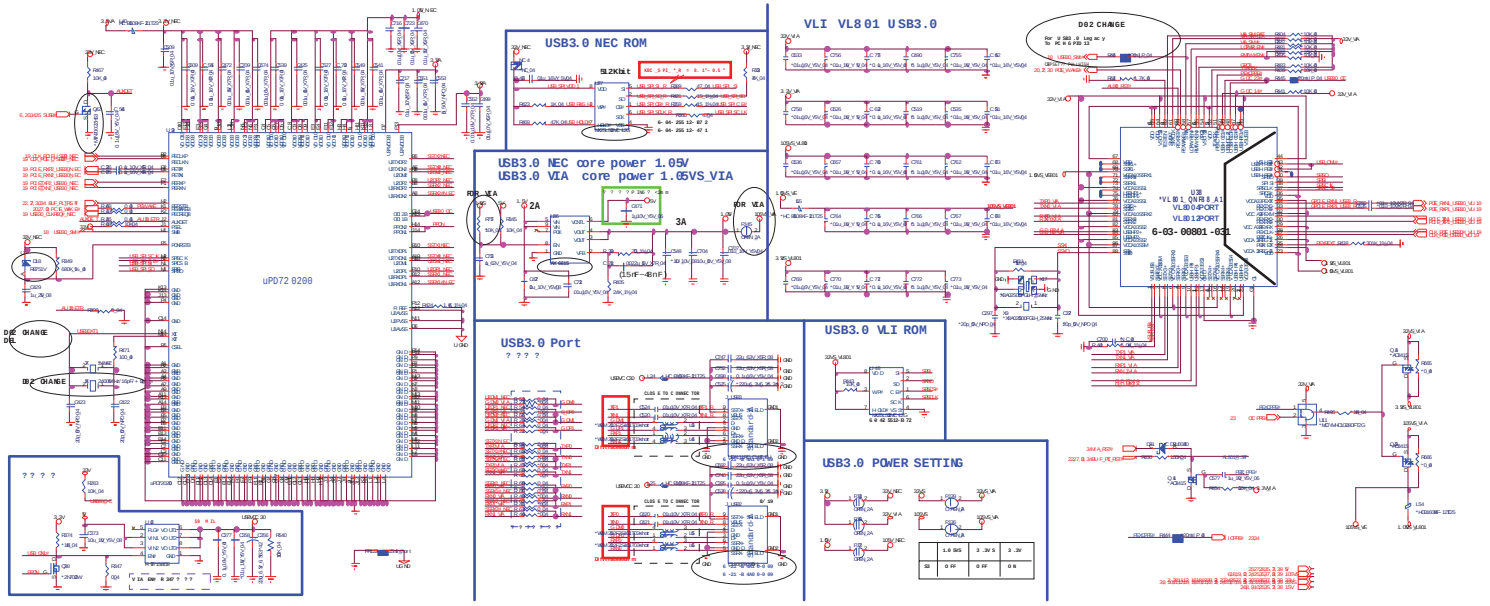

http://hobi-elektronika.net

Card Reader (JMC251C)

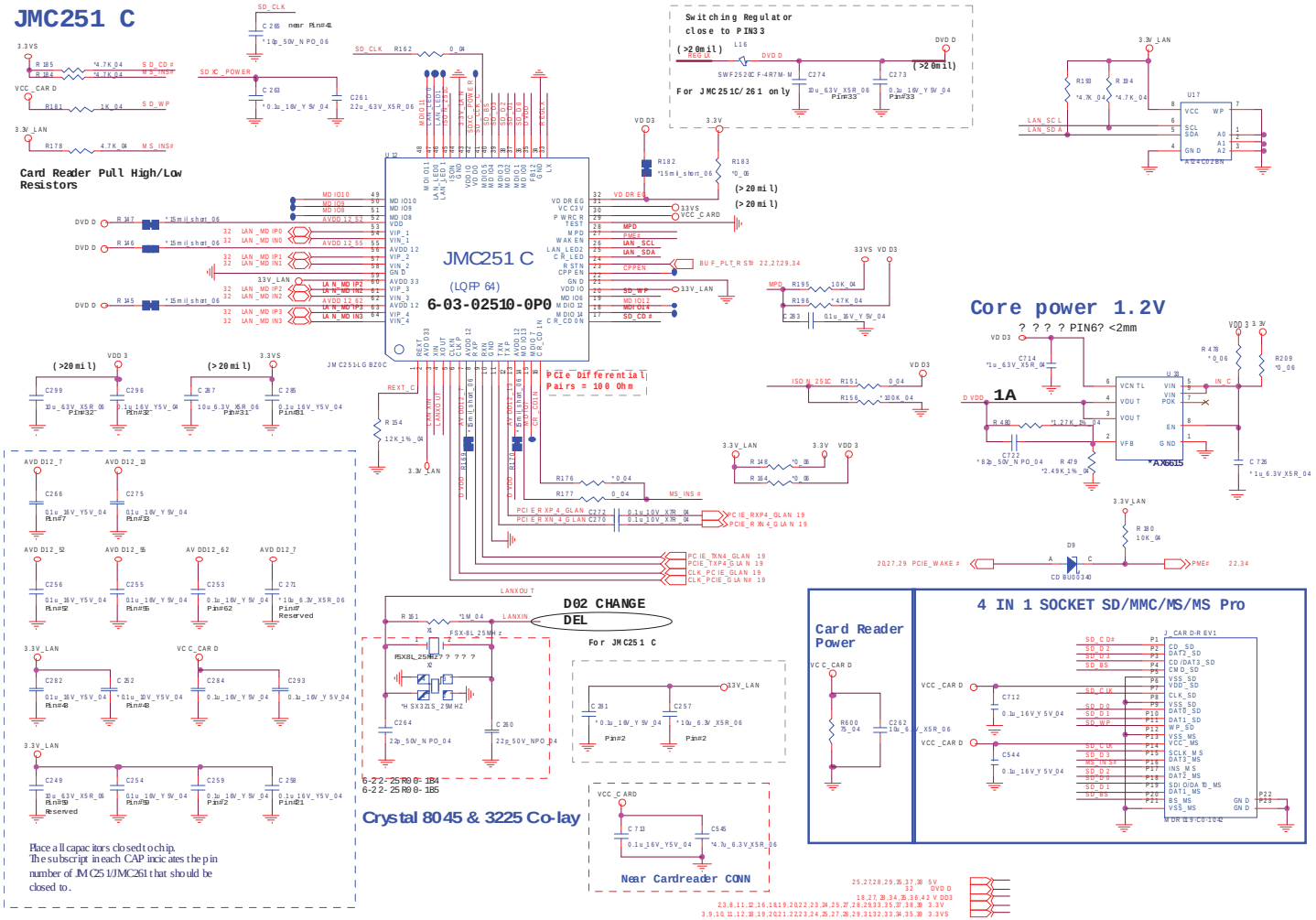

Sheet 30 of 49
Card Reader
(JMC251C)

B.Schematic Diagrams

http://hobi-elektronika.net

SATA ODD, LED, Hotkey, LID SW

Sheet 31 of 49
SATA ODD, LED, Hotkey, LID SW

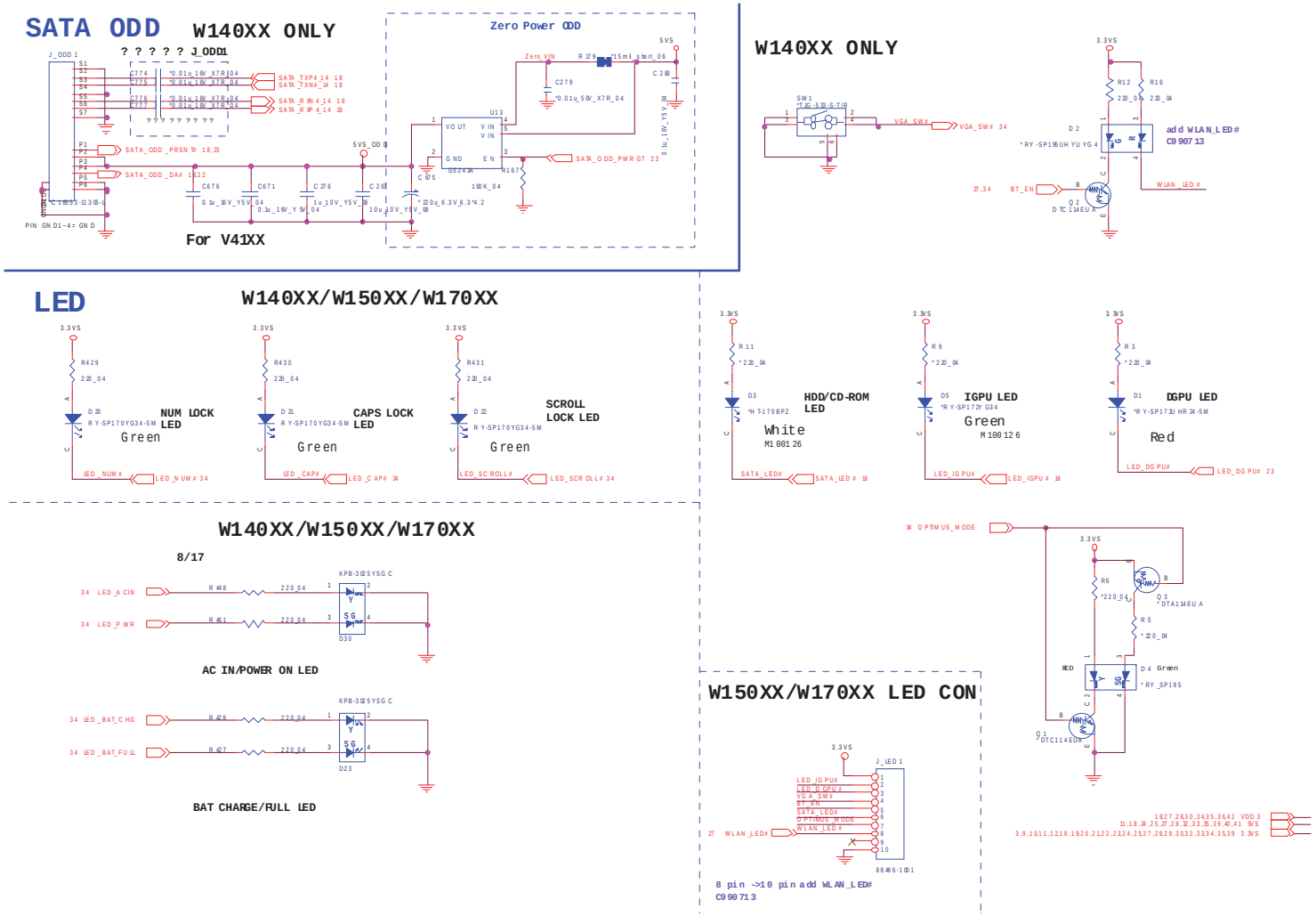

http://hobi-elektronika.net

HDMI, RJ45

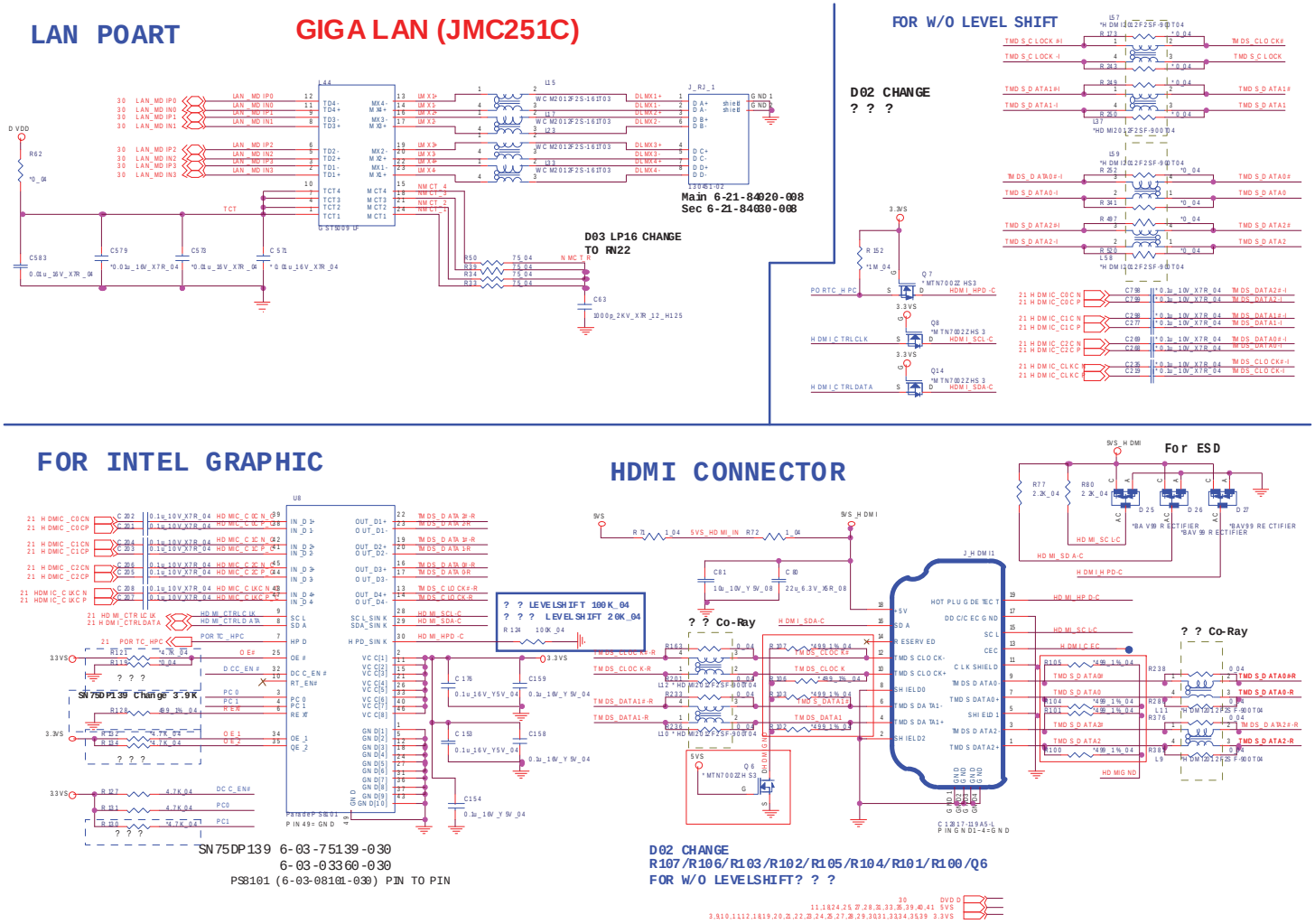

Sheet 32 of 49
HDMI, RJ45

http://hobi-elektronika.net

Audio Codec ALC269

Sheet 33 of 49
Audio Codec
ALC269

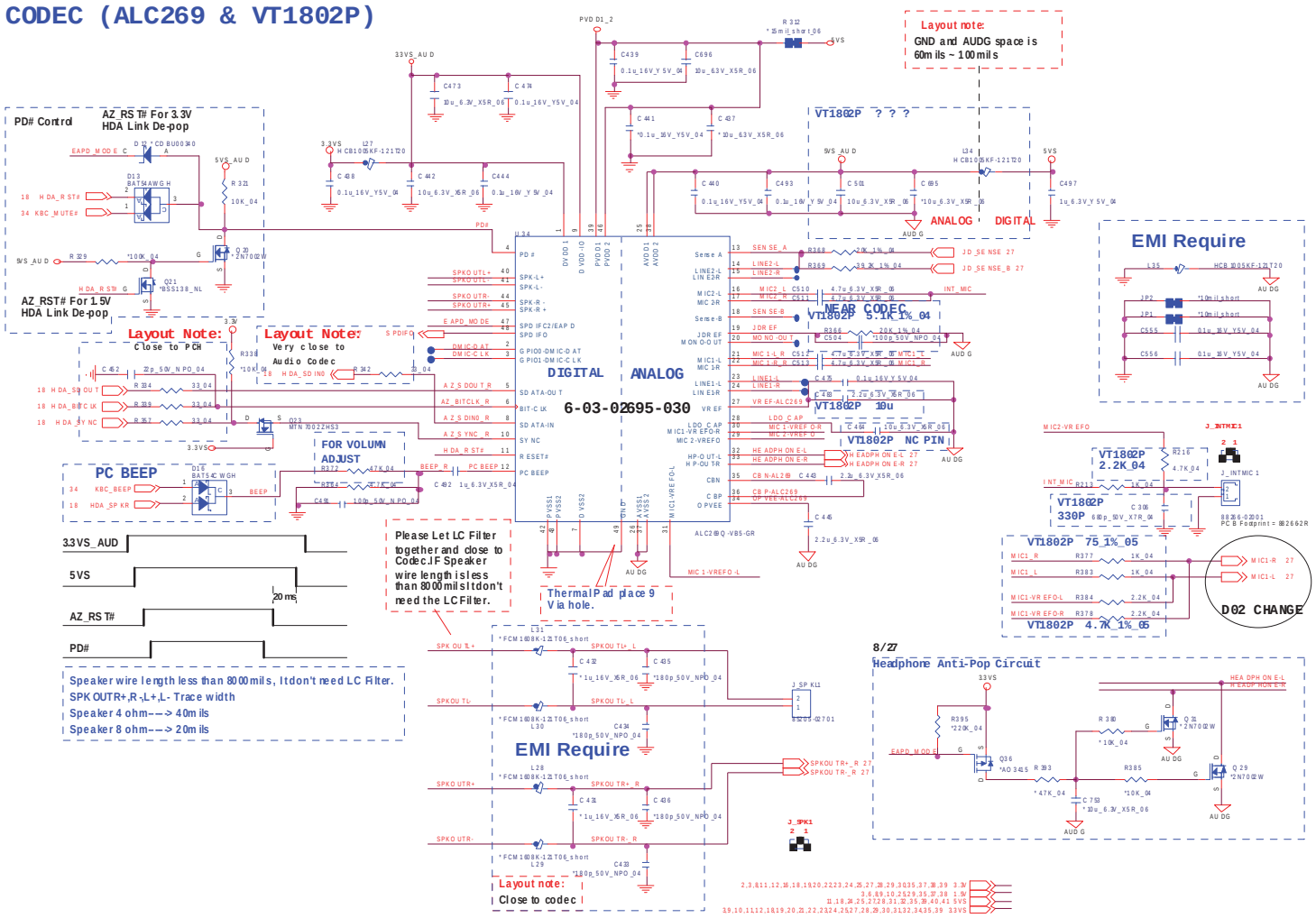

http://hobi-elektronika.net

KBC-ITE IT8518E

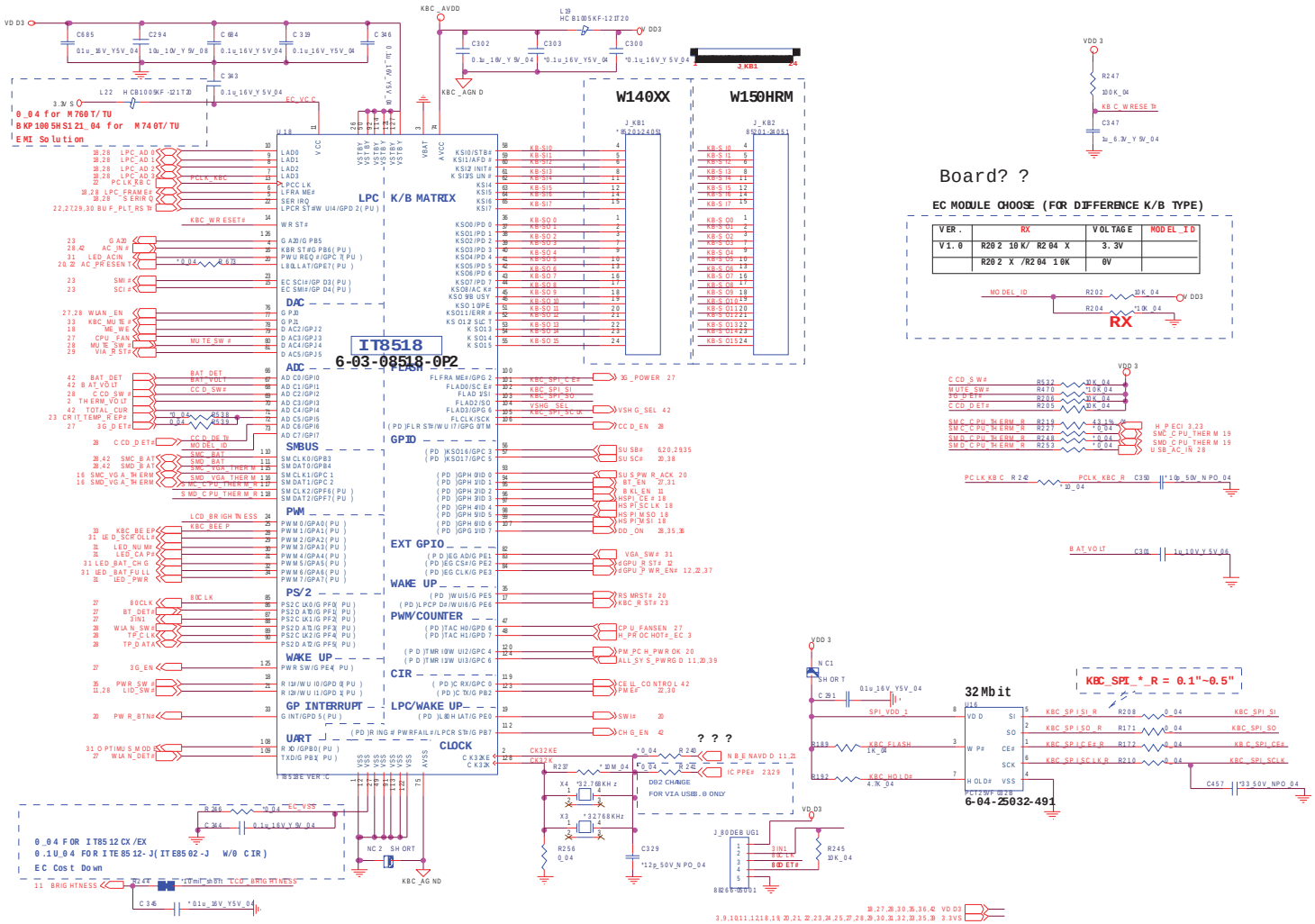

Sheet 34 of 49
KBC-ITE IT8518E

http://hobi-elektronika.net

5VS, 3VS, 3.3VM, 1.5VS_CPU

Sheet 35 of 49
5VS, 3VS, 3.3VM, 1.5VS_CPU

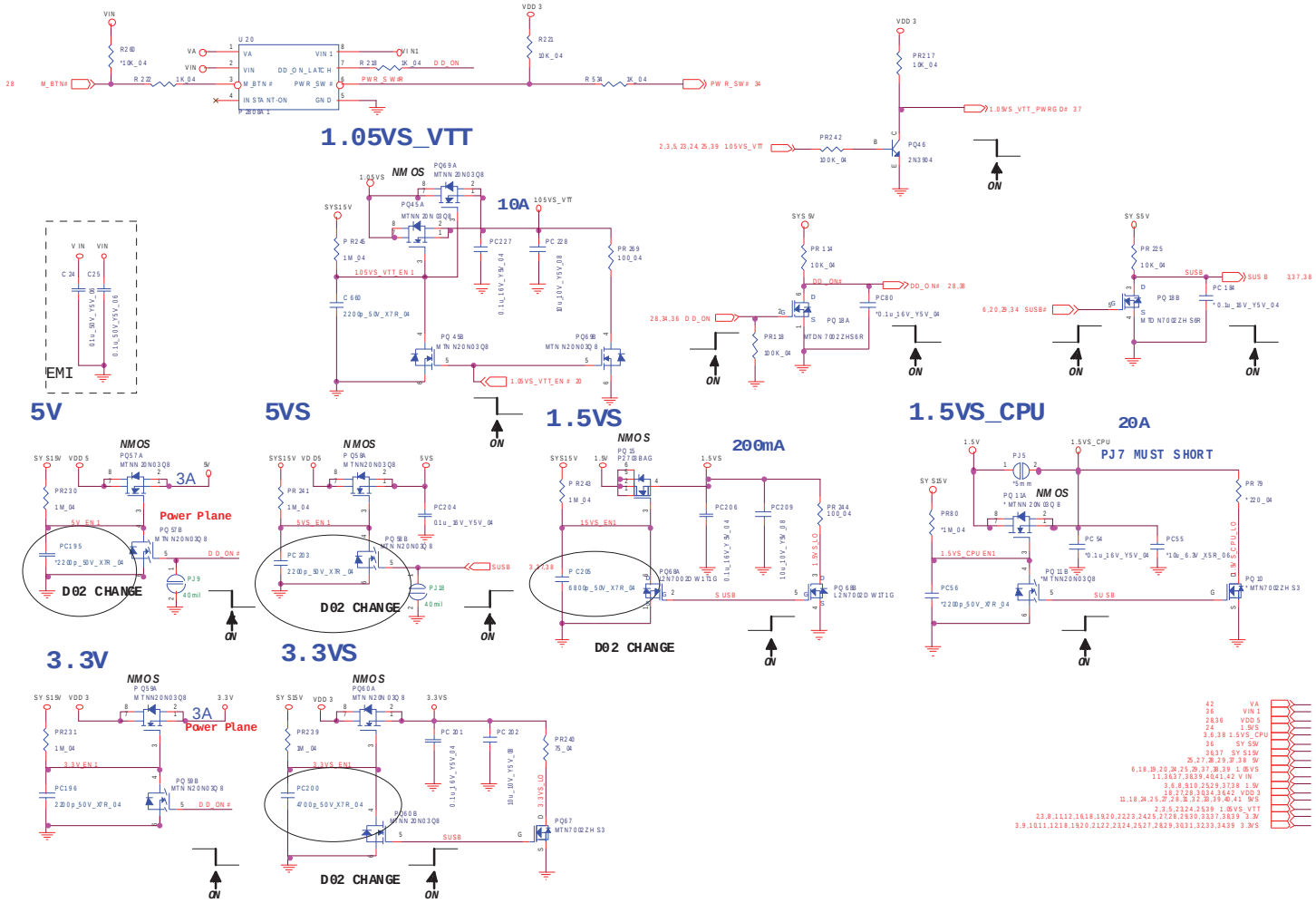

http://hobi-elektronika.net

VDD3, VDD5

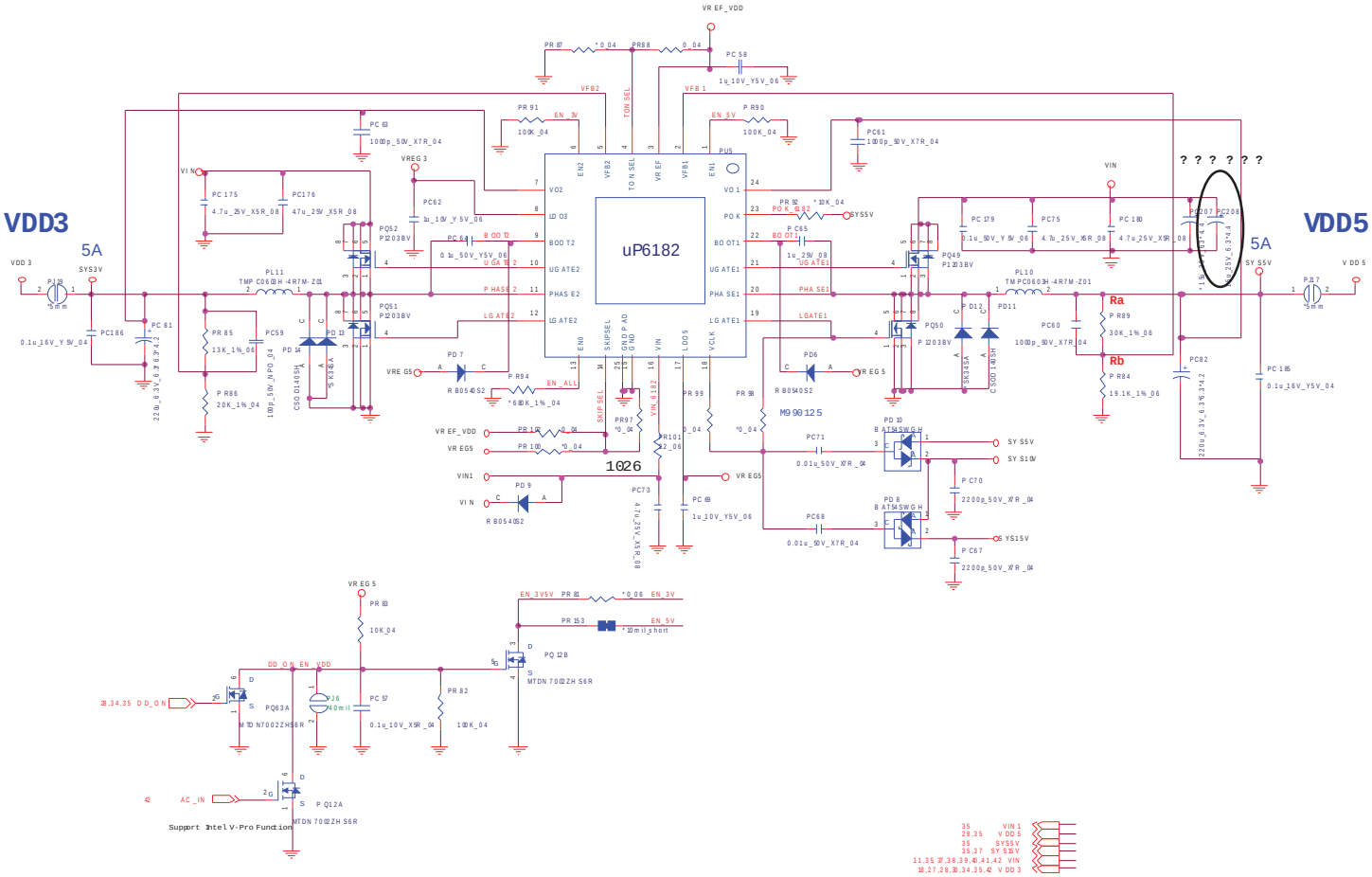

Sheet 36 of 49
VDD3, VDD5

http://hobi-elektronika.net

Power 0.85VS, 1.8VS, PEX_VDD

Sheet 37 of 49
Power 0.85VS,
1.8VS, PEX_VDD

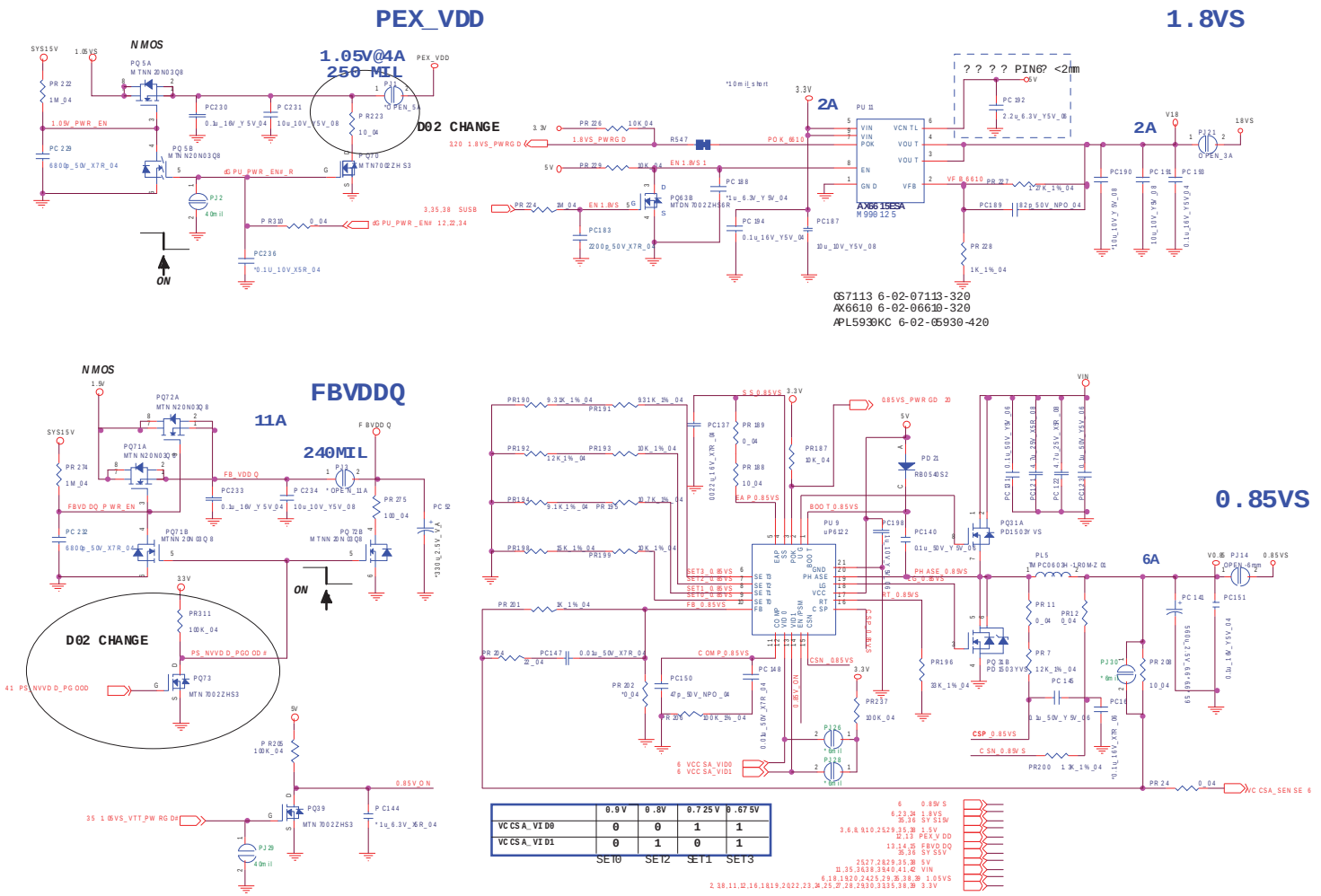

	0.9V	0.8V	0.725V	0.675V
VCCSA_VID0	0	0	1	1
VCCSA_VID1	0	1	0	1
	SET0	SET2	SET1	SET3

http://hobi-elektronika.net

Power 1.5V/1.05VS/0.75V

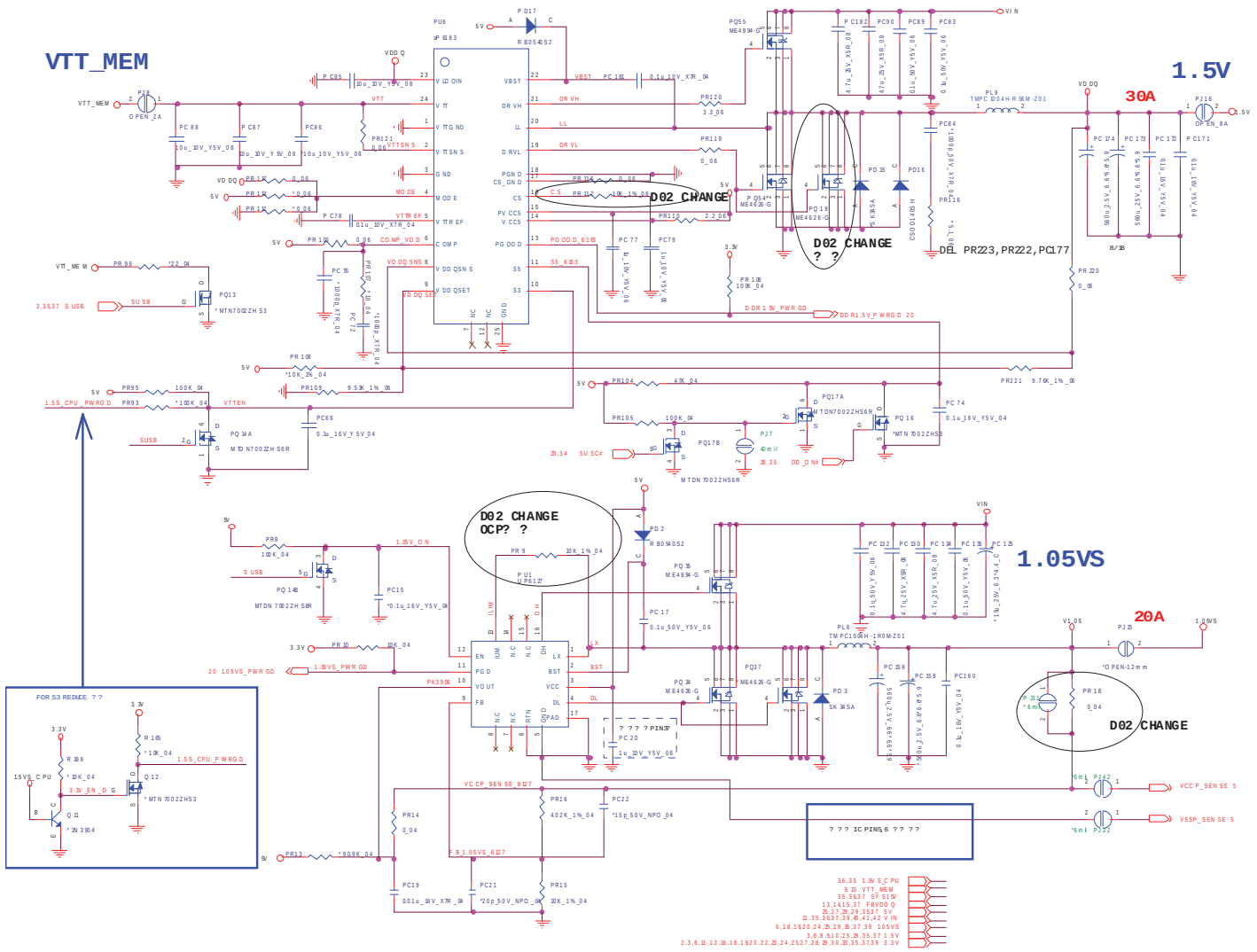

Sheet 38 of 49
Power 1.5V/1.05VS/
0.75V

http://hobi-elektronika.net

Power V-Core1

Sheet 39 of 49
Power V-Core1

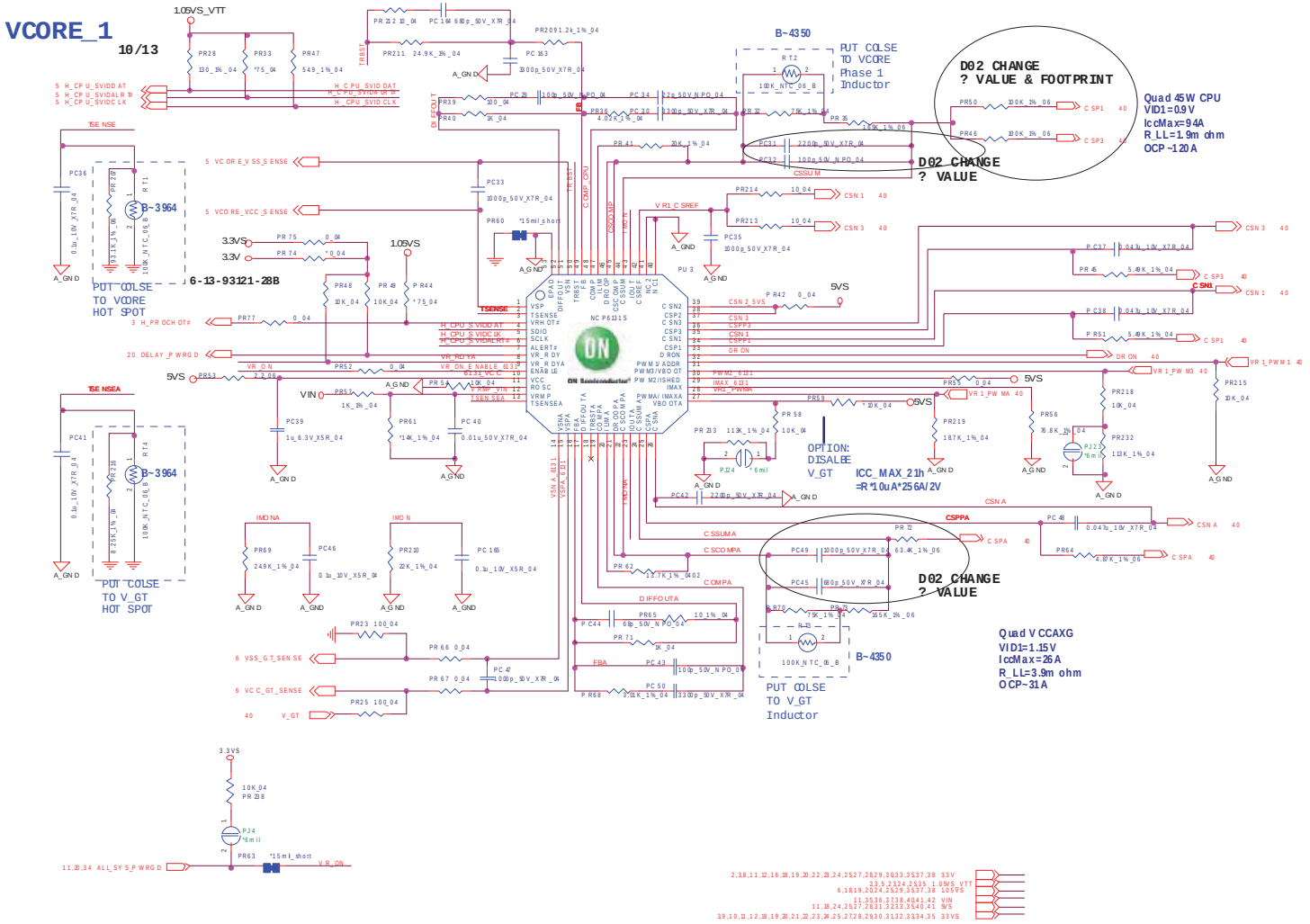

http://hobi-elektronika.net

Power V-Core2

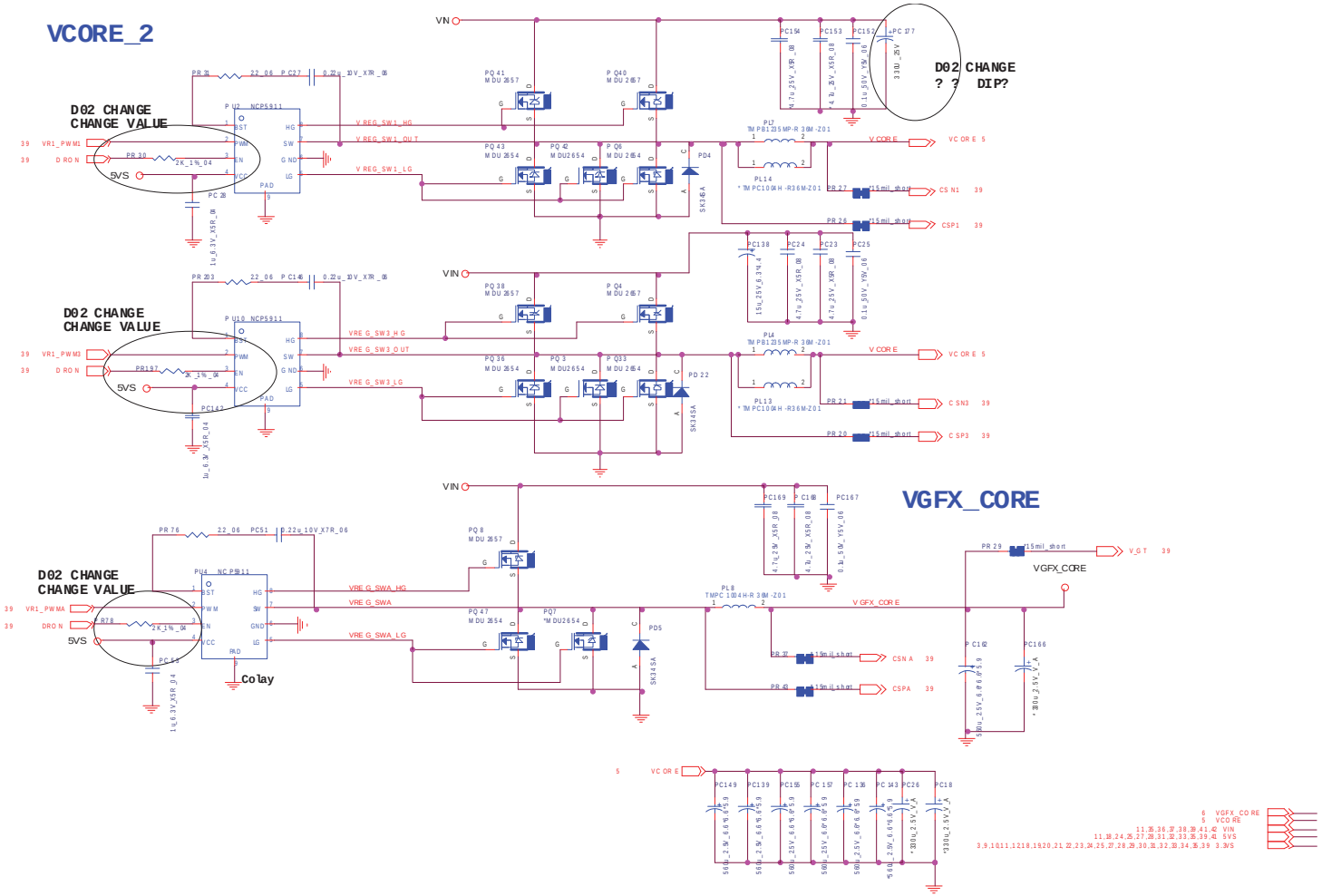

Sheet 40 of 49
Power V-Core2

http://hobi-elektronika.net

Power VGA NVVDD

	0.8125V	0.8625V	0.9125V	
NVVDD_VID0	1	0	1	(GPIO5)
NVVDD_VID1	0	0	1	(GPIO6)
NVVDD_VID2	1	1	0	(GPIO7)

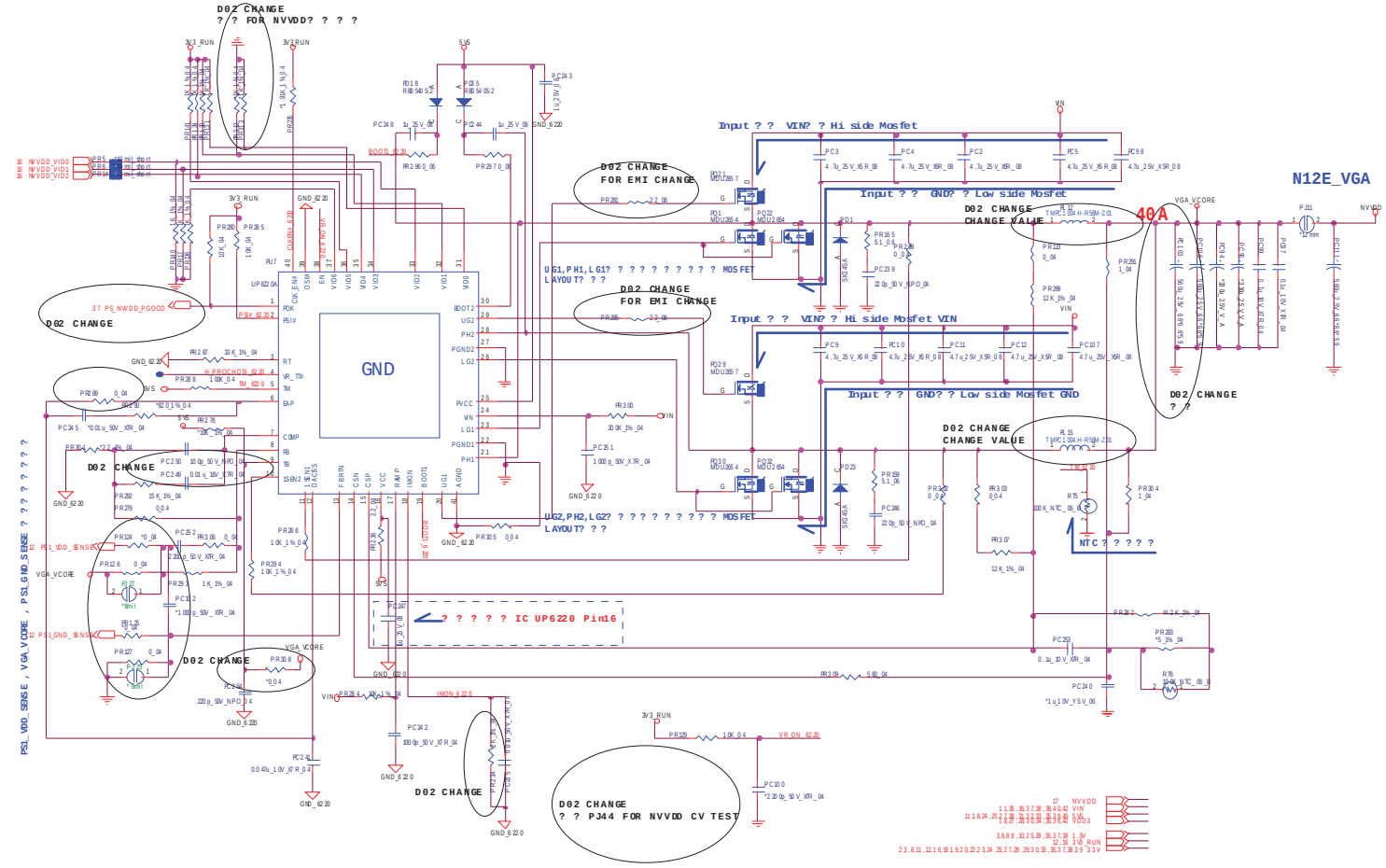

Sheet 41 of 49
Power VGA NVVDD

http://hobi-elektronika.net

AC_IN, Charger

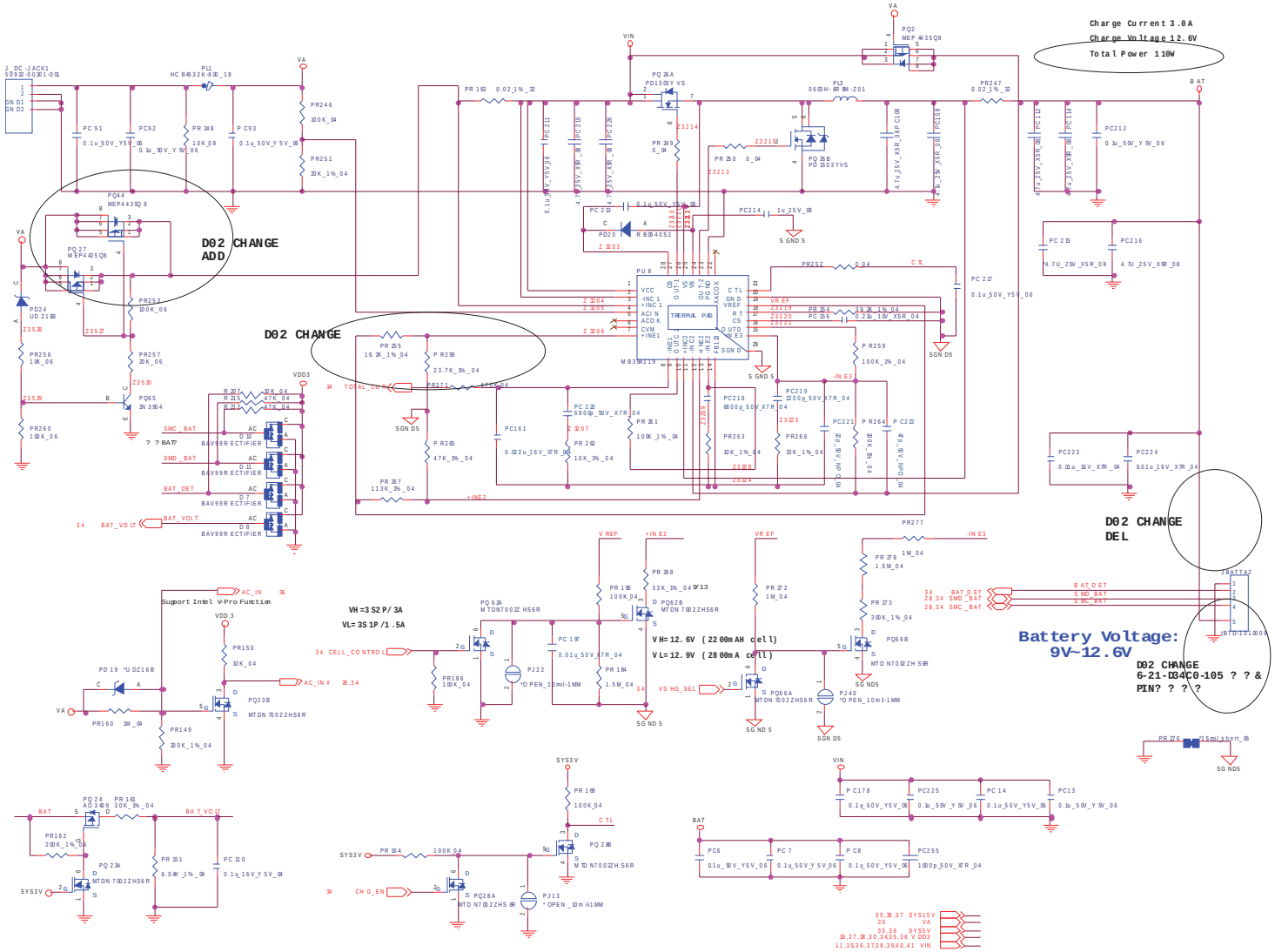

Sheet 42 of 49
AC_IN, Charger

http://hobi-elektronika.net

W150HNM Audio Board

USB PORT(PORT3)

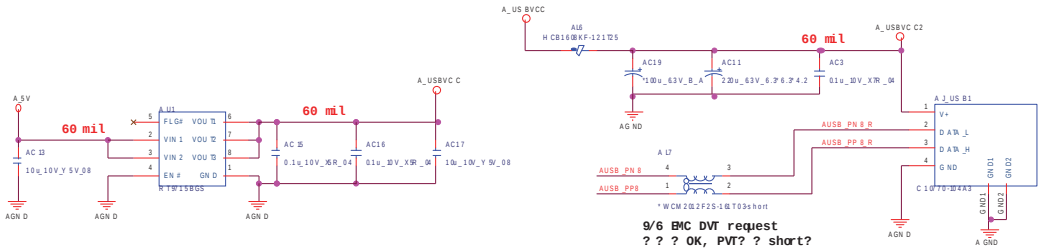

Sheet 43 of 49
W150HNM Audio Board

AUDIO BOARD

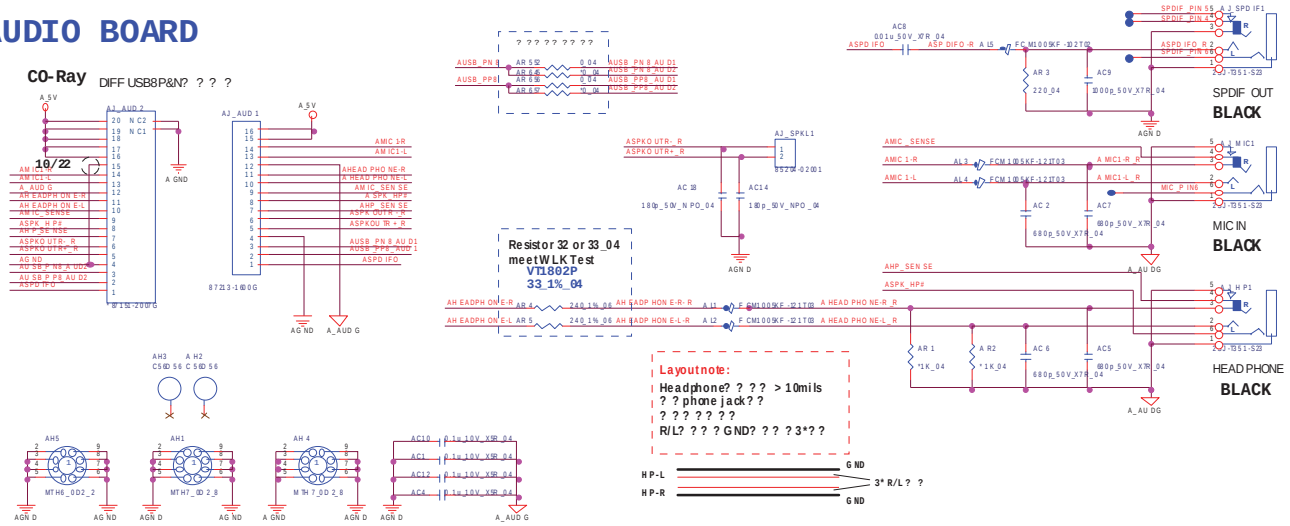

http://hobi-elektronika.net

W150HNM Second HDD Board

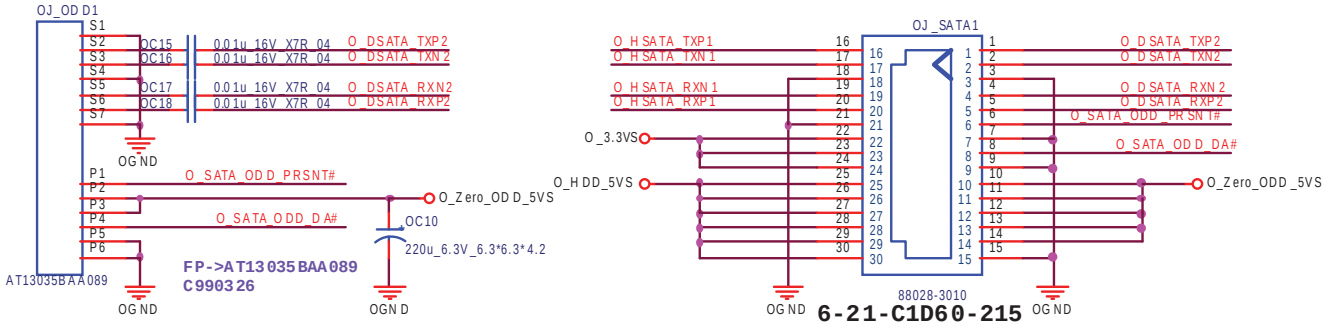

W150HNM Zero Power

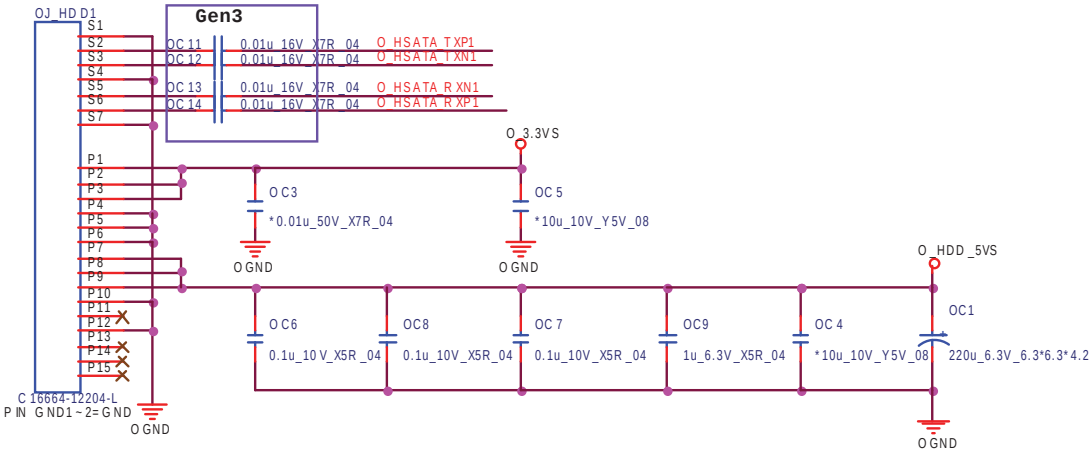

6-21-C2700-122

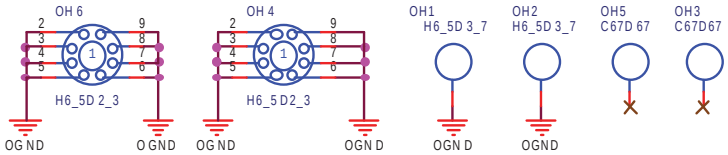

Sheet 44 of 49
W150HNM Second
HDD Board

http://hobi-elektronika.net

B5100 Click Board

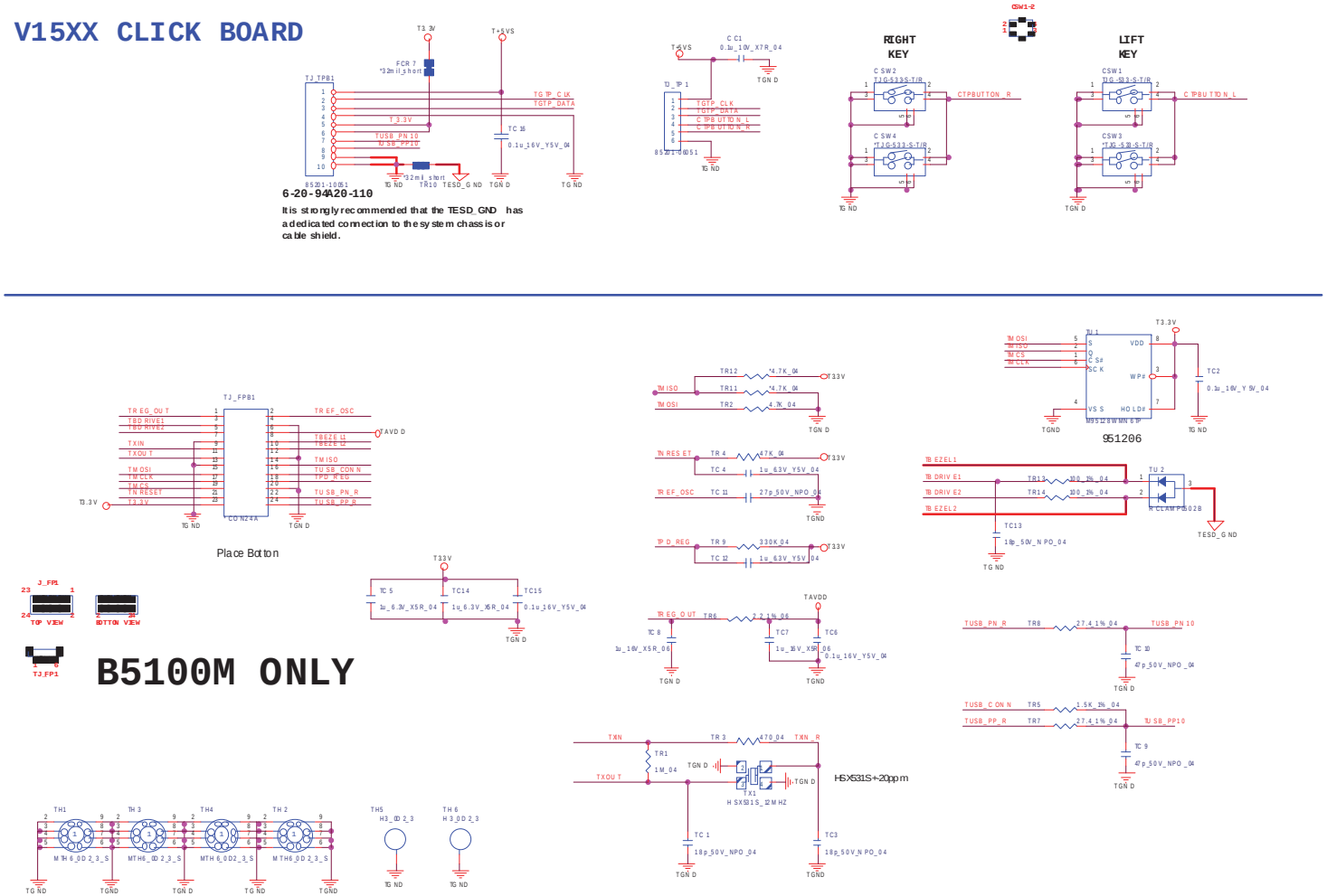

Sheet 45 of 49
B5100 Click Board

http://hobi-elektronika.net

B5100 Fingerprint Board

V51XX FINGERPRINT BOARD

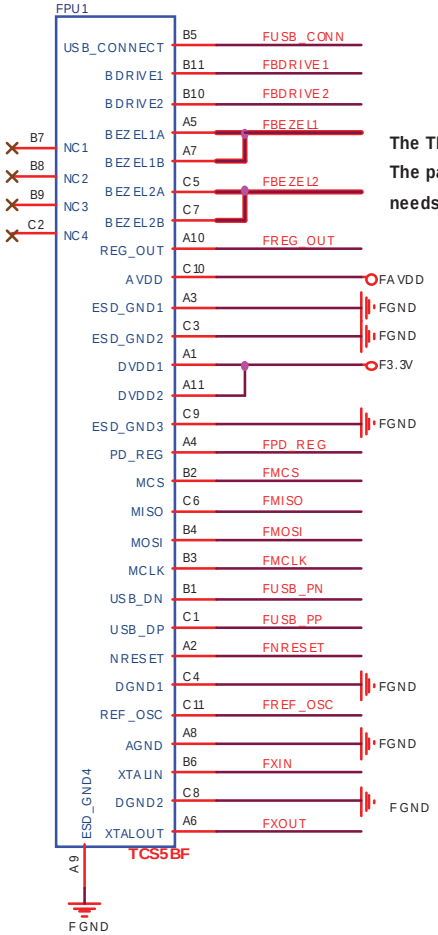

The TESD_GND trace has to be wide (>20mil)
The path be marked in RED
needs to be design to be short and at low impedance.

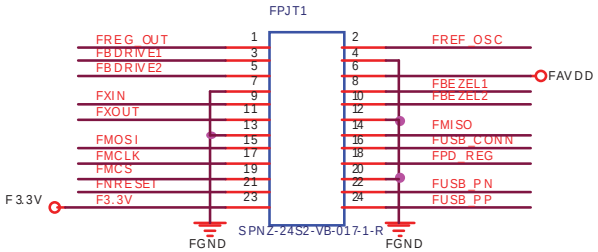

6-21-41710-212

Sheet 46 of 49
B5100 Fingerprint Board

B5100M ONLY

http://hobi-elektronika.net

B5130 LED & VGA SW Board

Sheet 47 of 49
B5130 LED & VGA
SW Board

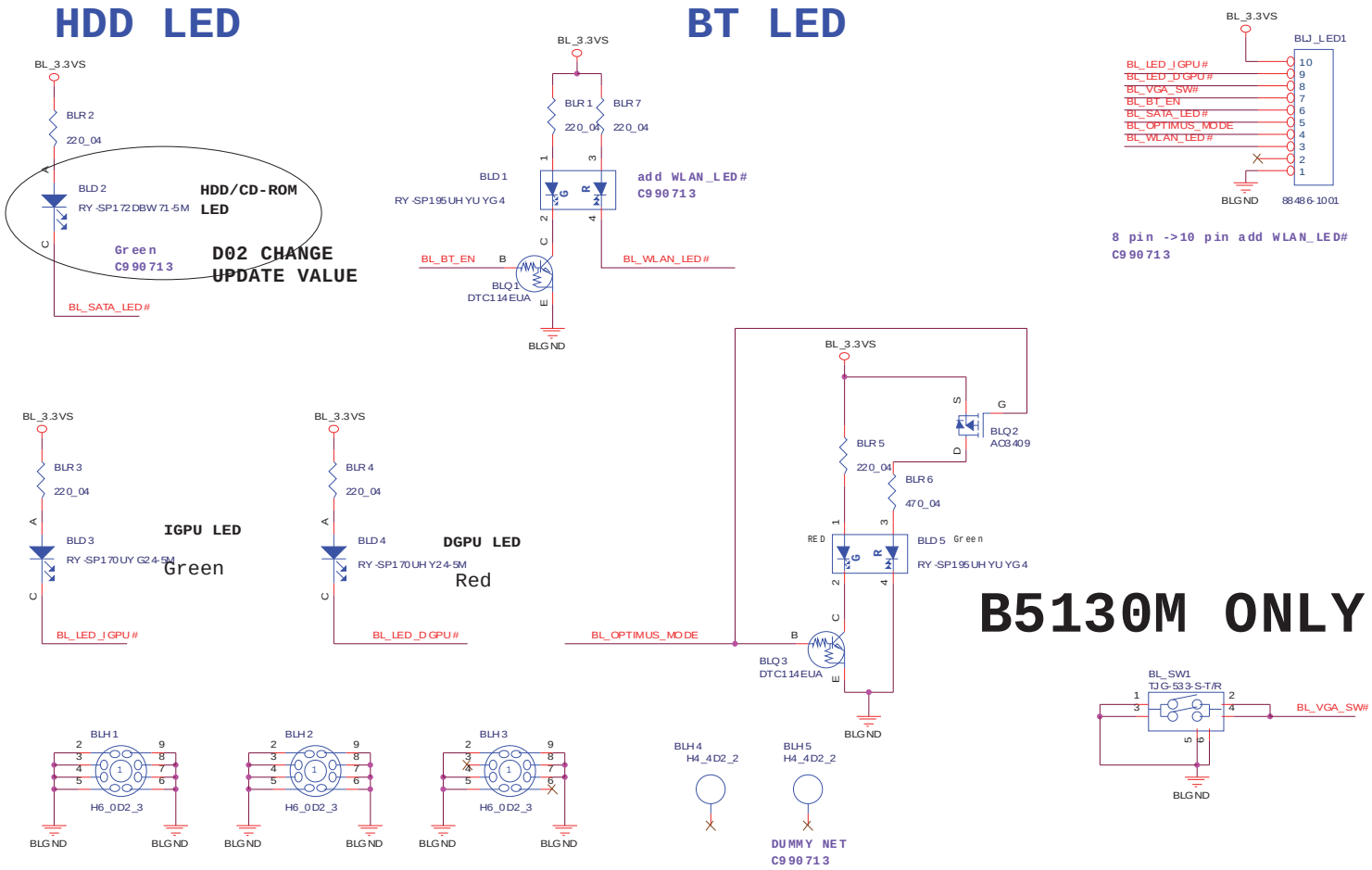

B5130M ONLY

http://hobi-elektronika.net

B5100 Power Switch Board

V51XX POWER SWITCH BOARD

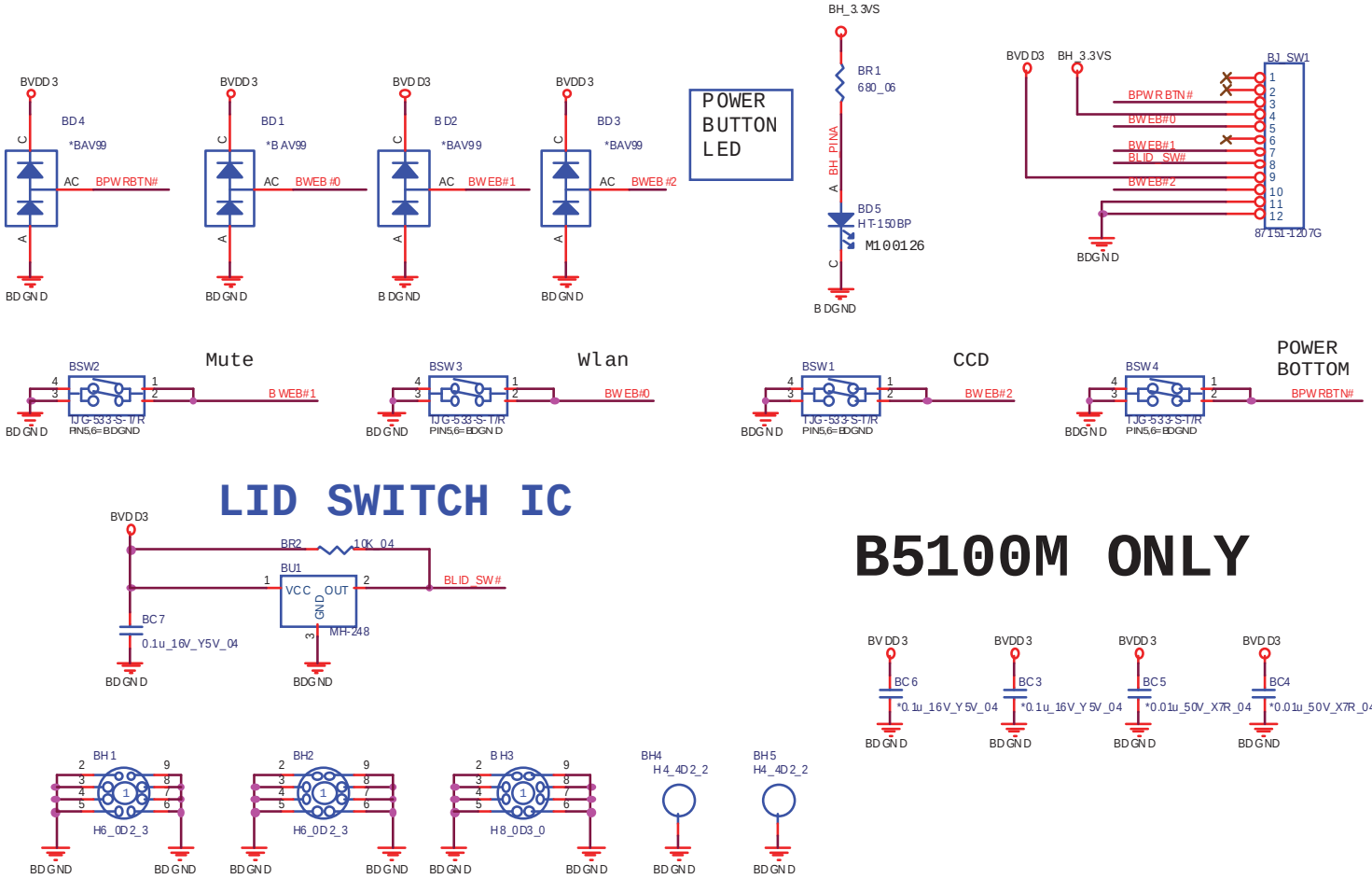

Sheet 48 of 49
B5100 Power Switch Board

http://hobi-elektronika.net