Z94Rp

Rev.1.2

Yonah/RC410ME/IXP450 BLOCK DIAGRAM

PAGE	TITLE
01	Block Diagram
02	Yonah CPU(1)
03	Yonah CPU(2)
04	THERMAL SENSOR/FAN
05	RC410ME AGTL+ I/F (1)
06	RC410ME A-LINK (2)
07	RC410ME DDR2 I/F (3)
08	RC410ME VIDEO I/F (4)
09	RC410ME POWER (5)
10	SB450 ALINK/PCI/CPU/LPC (1)
11	SB450 IDE (2)
12	SB450 AC97/USB (3)
13	SB450 POWER (4)
14	SB450 STRAPs (5)
15	DDR2 DIMMs
16	DDR2 TEMINATION
17	CLOCK GEN.-ICS951417
18	LVDS
19	CRT
20	ALC660/MIC
21	AMP/Speaker
22	EC IT8510E
23	ISA ROM
24	SIO/PortBAR
25	LAN_8100CL
26	RJ11+45 & MDC
27	CARDBUS R5C841
28	PCMCIA&Debug Port
29	SD/MS
30	HDD/CD-ROM
31	USB/LED/TP
32	INV/WLAN
33	Hole
34	System poweron sequency
35	System Resource
61	Power-SEQUENCE
62	Power-VCORE
63	Power-3VSUS/5VSUS
64	Power-1.8VSUS/1.2VS
65	Power-VCCP/1.5VS/0.9VS
66	Power-BAT
67	Power-CHARGE
68	Power-POWER LIMIT/AC-BAT DETECT
69	Power-LOAD SWITCH
70	Power Block Diagram
**	
**	

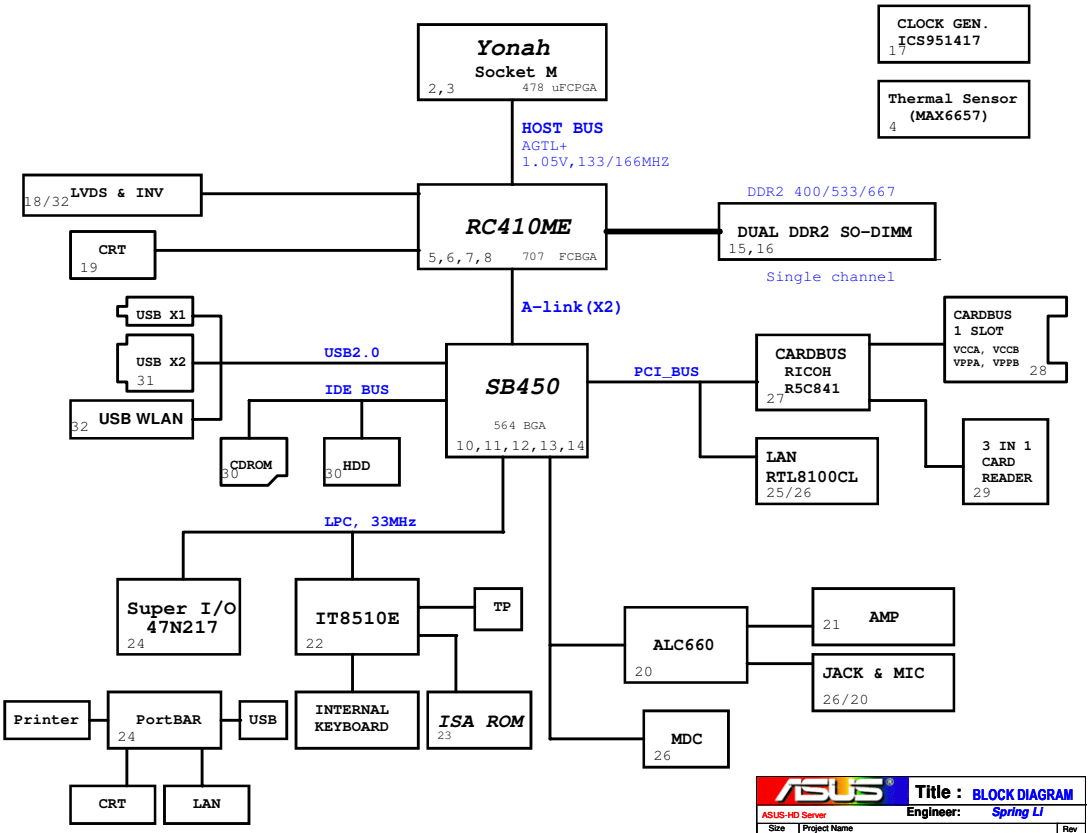

ASUS Title : BLOCK DIAGRAM
ASUS-HD Server Engineer: Spring Li
Size Custom Project Name Z94Rp Rev 1.1
Date: 星期一, 四月 17, 2006 Sheet 1 of 45

<< Kennedy_Zhang >>

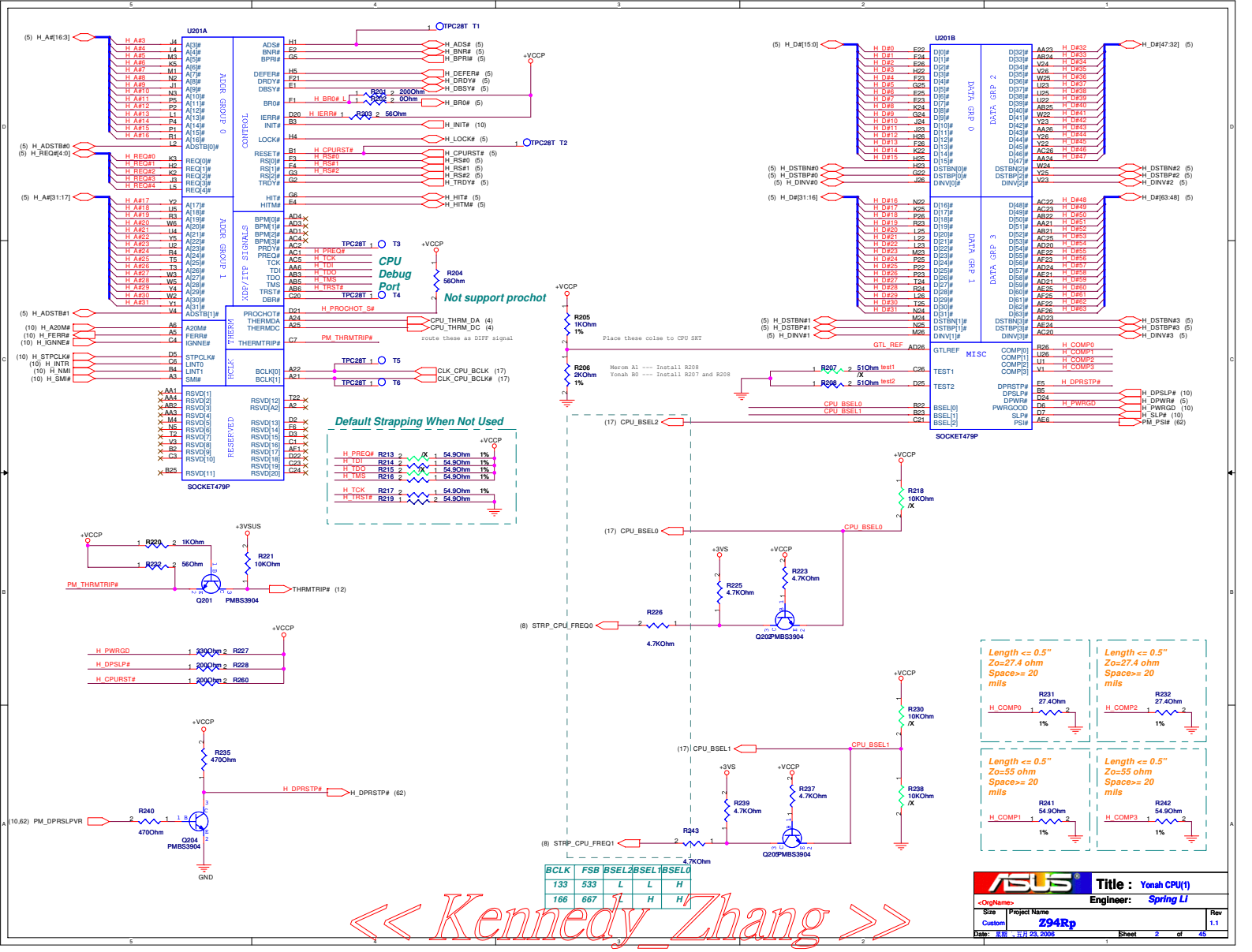

BCLK	FSB	BSEL2	BSEL1	BSEL0
133	533	L	L	H
166	667	L	H	H

<< Kennedy_Zhang >>

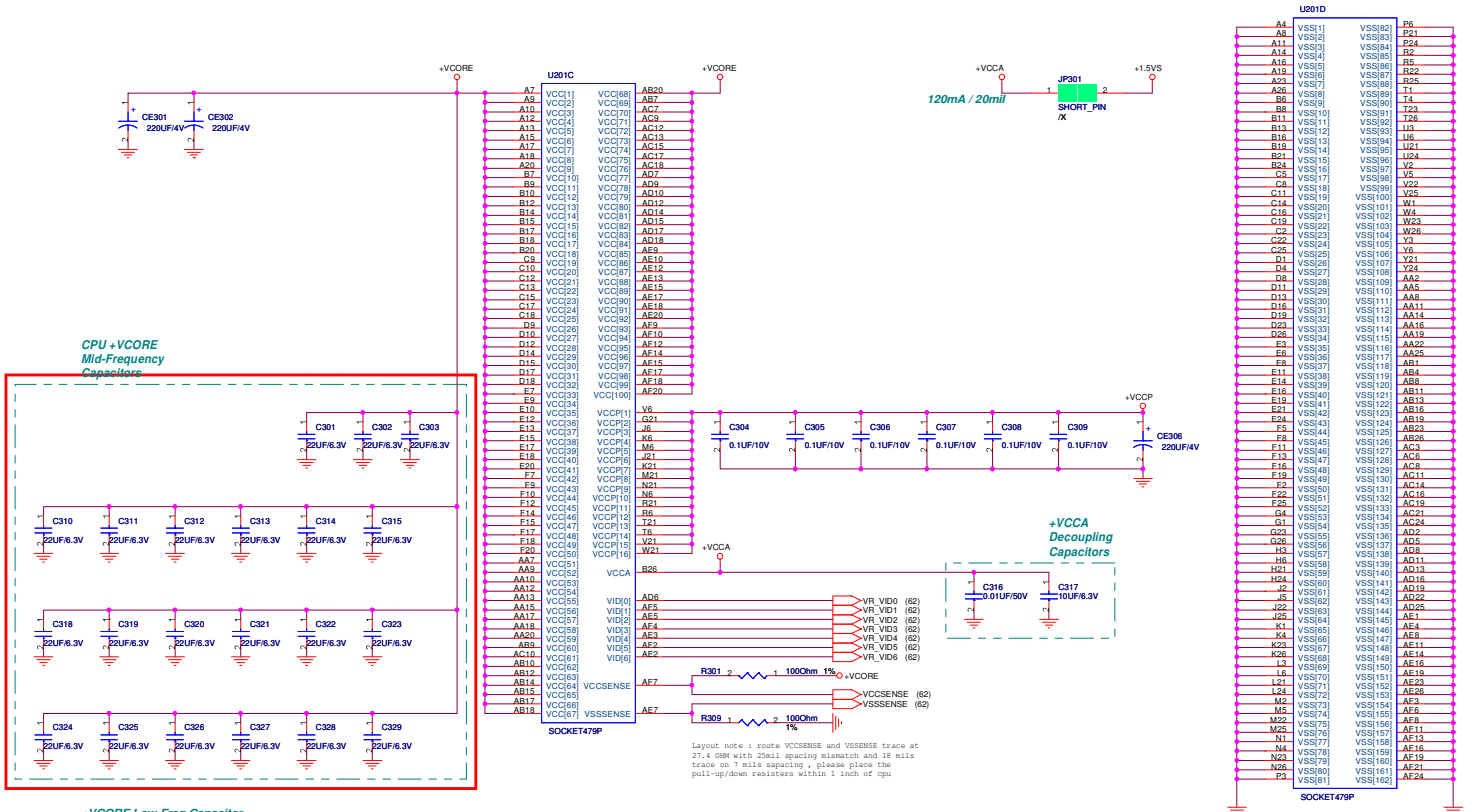

+VCORE Low-Freq Capacitor
*Intel: 330UF *6*
*ATI: 330UF *6*
*R1F: 330UF *4*
*A7J: 330UF *5*
+VCORE Mid-Frequency Capacitor
*Intel: 22UF *32*
*ATI: 10UF *26*
*R1F: 22UF *16*
*A7J: 22UF*29 use 19*
*A6RF: 22UF*21 use 21*
+VCCP Decoupling Capacitor
*Intel: 270UF *1, 0.1UF *6*
*R1F: 220UF *1, 0.1UF *4*
*A7J: 220UF *1, 0,1UF *6*

*A6RF: 220UF *1, 0,1UF *6*

ASUS	Title : Yonah CPU(2)		
<OrgName>	Engineer: Spring Li		
Size: Custom	Project Name: Z94Rp		Rev: 1.1
Date: 星期 二, 六月 23, 2006	Sheet 3 of 45		

<< Kennedy_Zhang >>

Fan Speed Control

KBC will issue a analog (a voltage level) signal.

SW: FAN_DA1 must be low during S3

Using a OP AMP and fine-tuning the level, we can improve the fan speed accuracy.

Route H_THERMDA and H_THERMDC on the same layer

----------OTHER SIGNALS
12 mils
==========GND
10 mils
=========H_THERMDA(10 mils)
10 mils
=========H_THERMDC(10 mils)
10 mils
=========GND
12 mils
----------OTHER SIGNALS

Avoid BPSB,Power

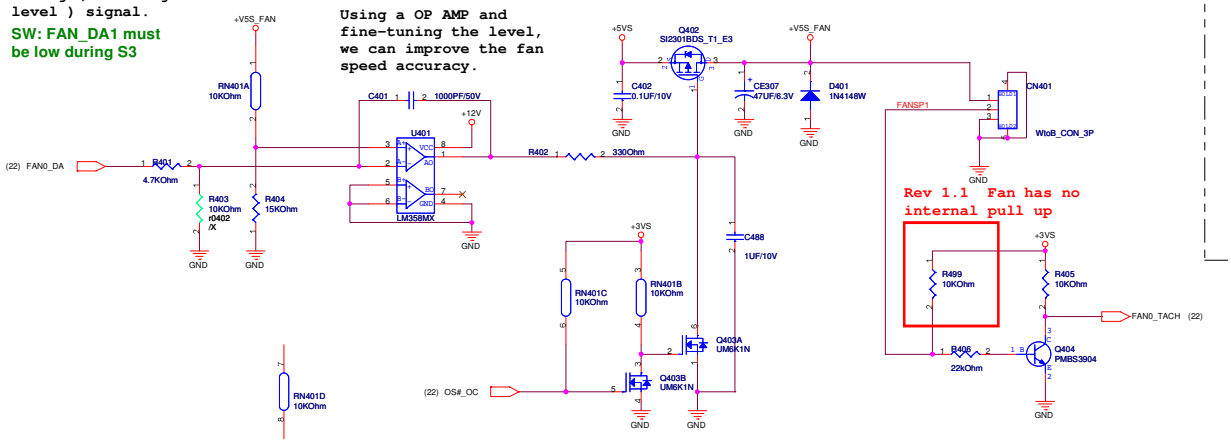

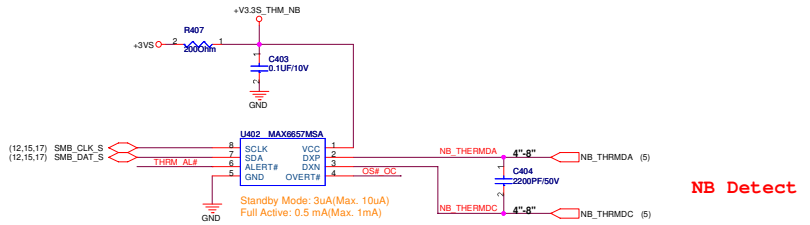

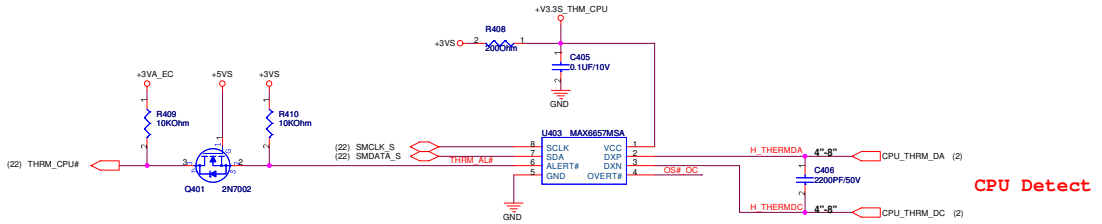

ASUS	Title : THERMAL SERSOR,FAN		
<OrgName>	Engineer: Spring Li		
Size: Custom	Project Name: Z94Rp		Rev: 1.1
Date: 星期二, 五月 23, 2006	Sheet 4 of 45		

<< Kennedy_Zhang >>

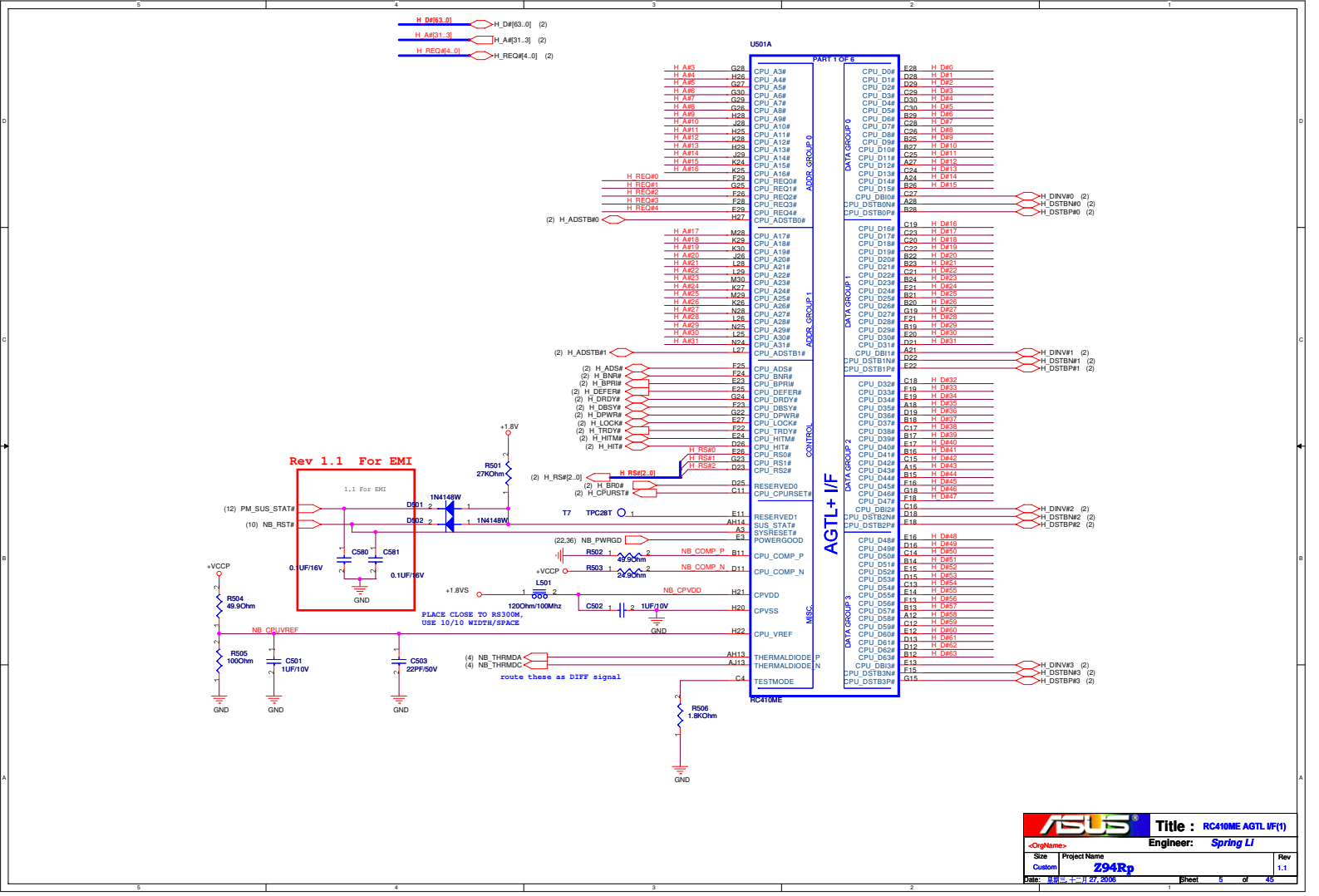

<< Kennedy_Zhang >>

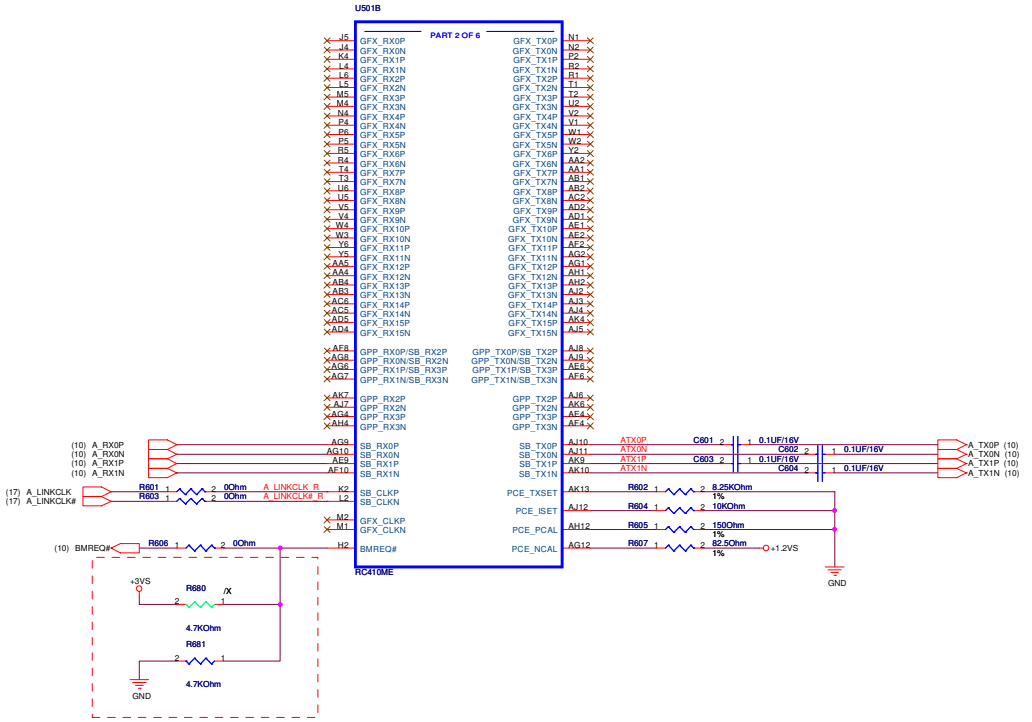

ASUS	Title : RC410ME PCIE & A-Link(2)		
<OrgName>	Engineer: Spring Li		
Size: Custom	Project Name: Z94Rp		Rev: 1.1
Date: 星期一, 十二月 27, 2006	Sheet 6 of 45		

<< Kennedy_Zhang >>

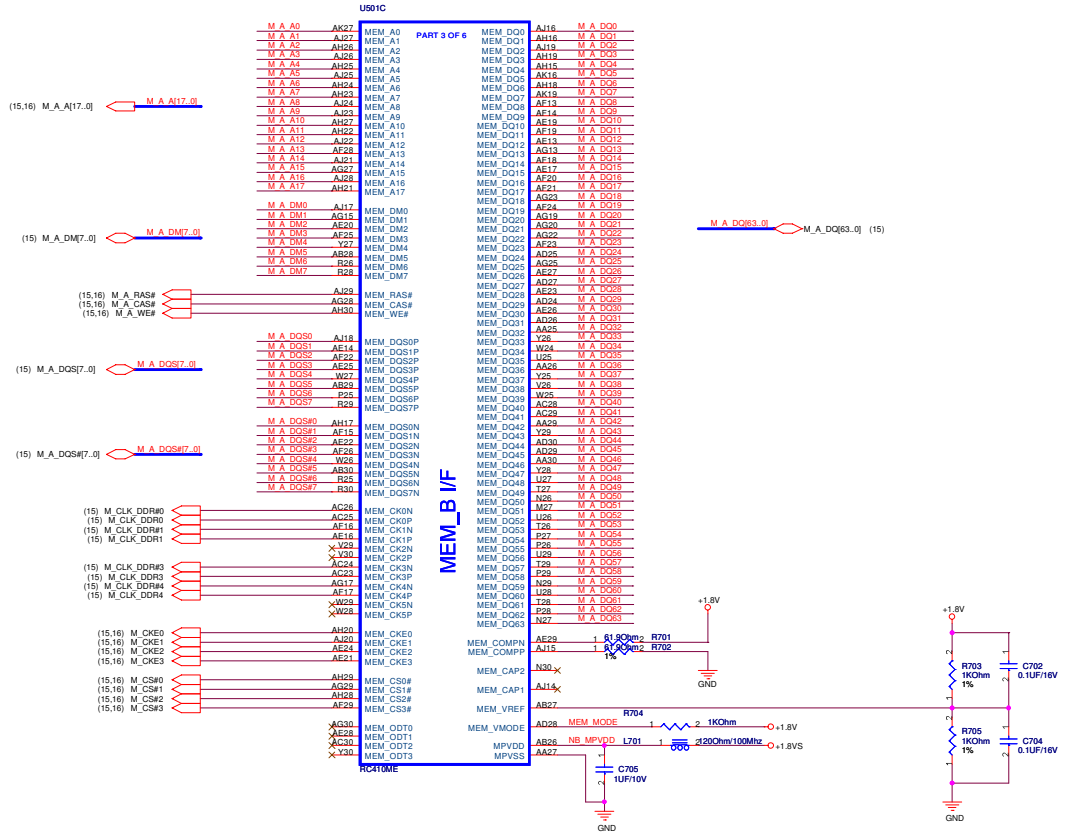

ASUS	Title : RC410ME DDR2 I/F (3)		
<OrgName>	Engineer: Spring Li		
Size: Custom	Project Name: Z94Rp		Rev: 1.1
Date: 星期三, 十一月 27, 2006	Sheet 7 of 45		

<< Kennedy_Zhang >>

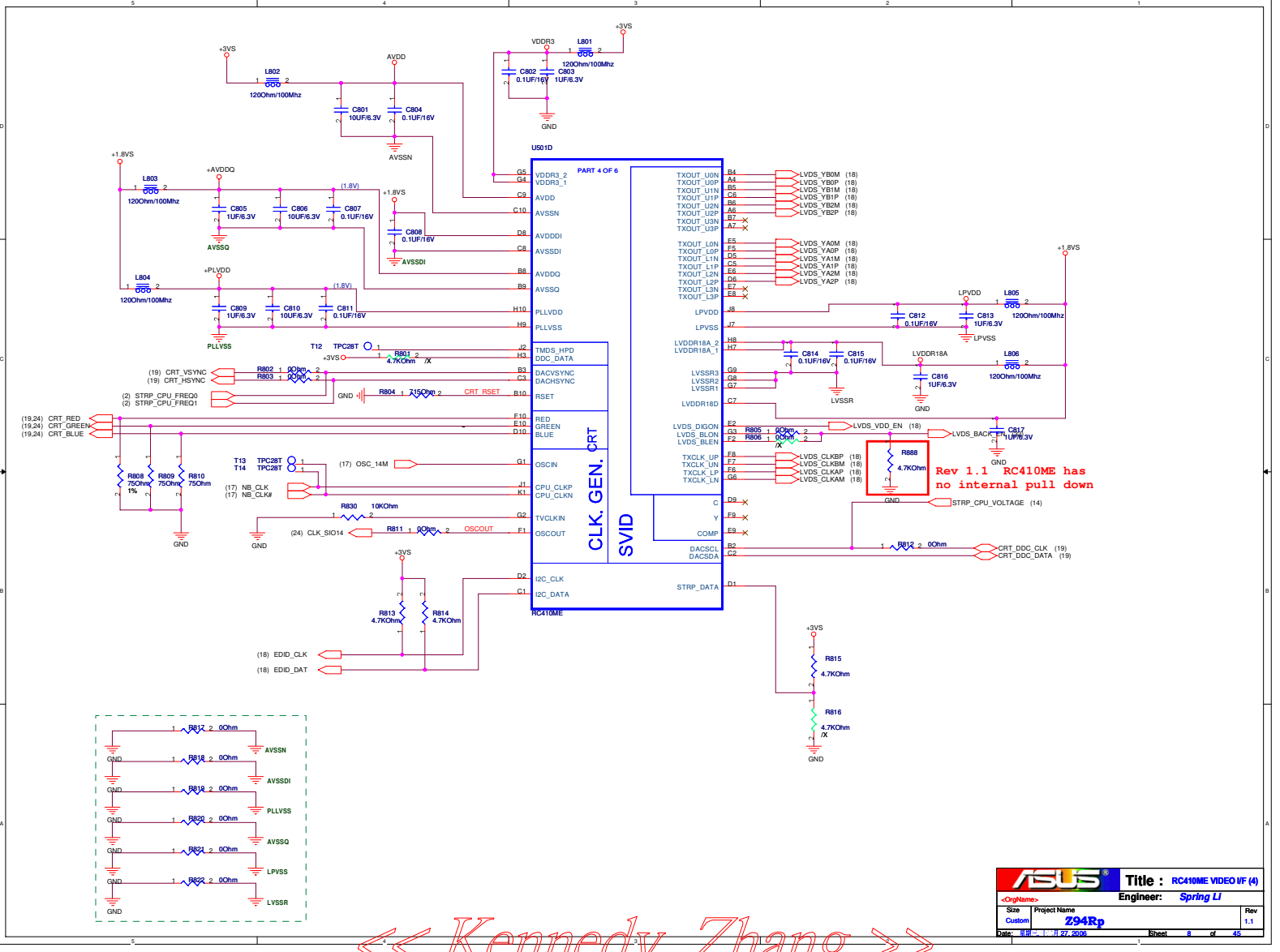

ASUS	Title : RC410ME VIDEO I/F (4)		
<OrgName>	Engineer: Spring Li		
Size: Custom	Project Name: Z94Rp		Rev: 1.1
Date: 星期一, 十二月 27, 2006	Sheet 8 of 45		

<< Kennedy_Zhang >>

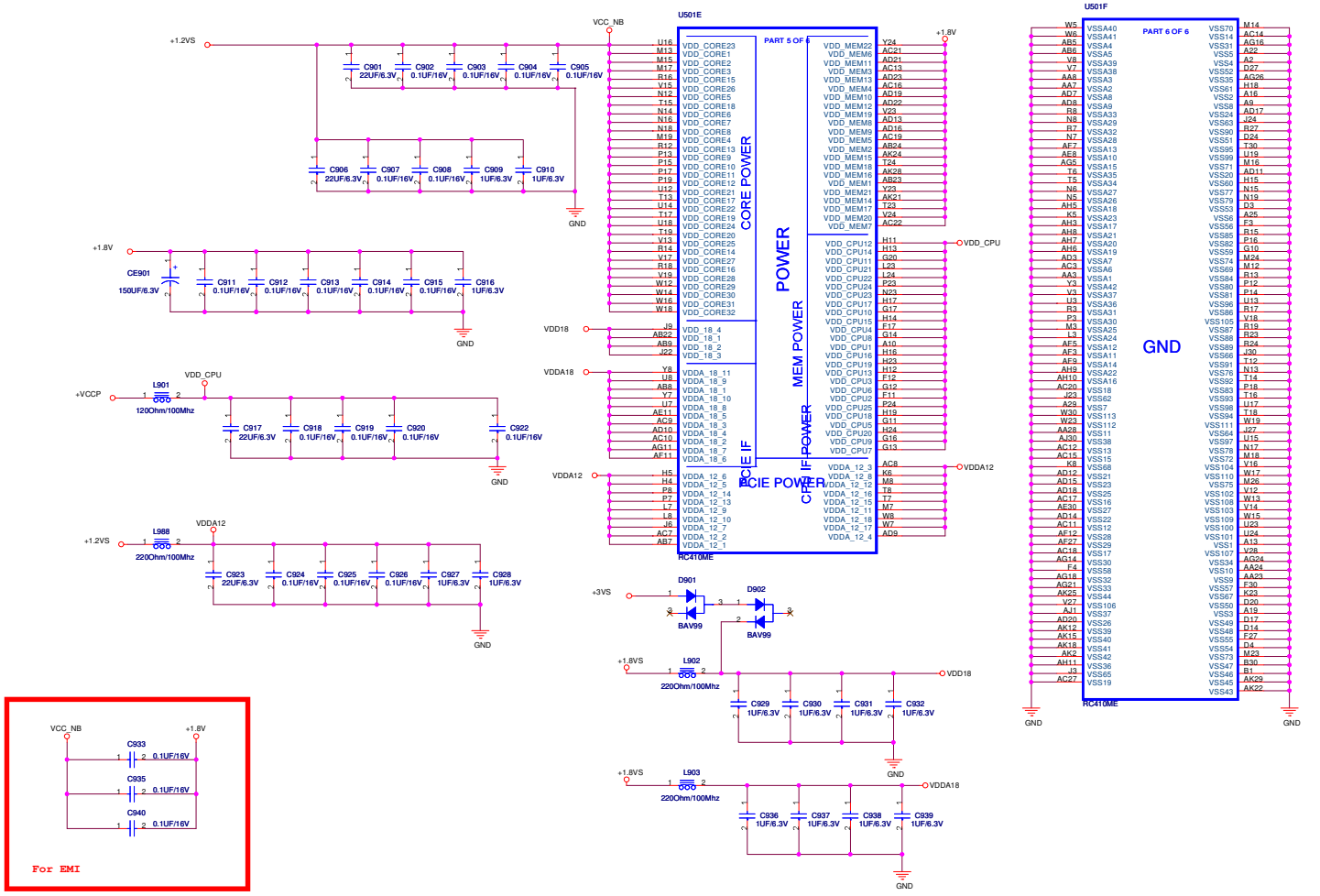

Title : RC410ME POWER (5)

<OrgName> Engineer: Spring LI

Size	Project Name	Rev
Custom	Z94Rp	1.1

Date: 星期一, 二月 27, 2006 Sheet 9 of 45

<< Kennedy_Zhang >>

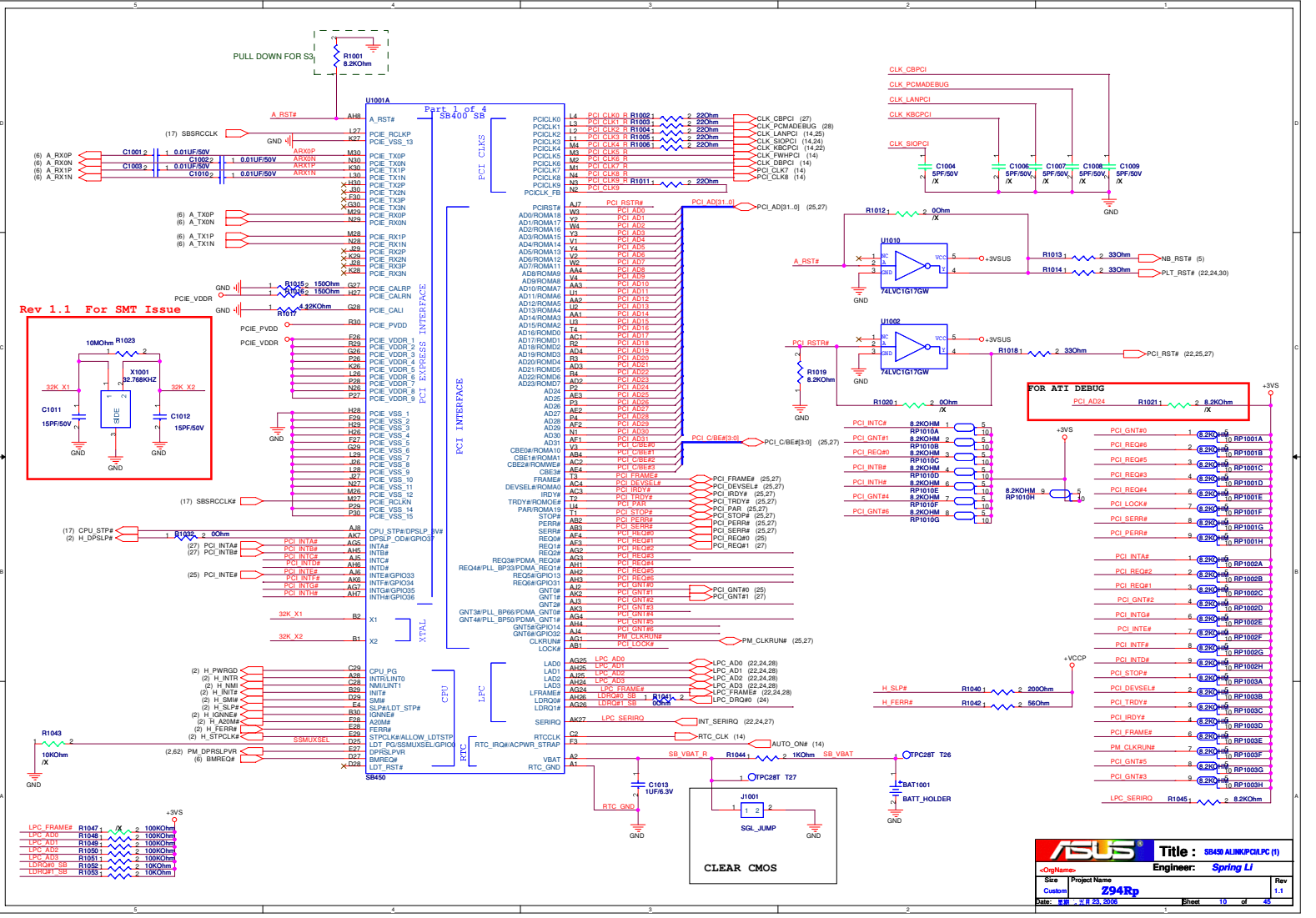

ASUS
Title : SB450 ALINKPCI/LPC (1)
Engineer: Spring Li
Size: Custom
Project Name: Z94Rp
Rev: 1.1
Date: 星期 , 五月 23, 2006
Sheet 10 of 45

<< Kennedy_Zhang >>

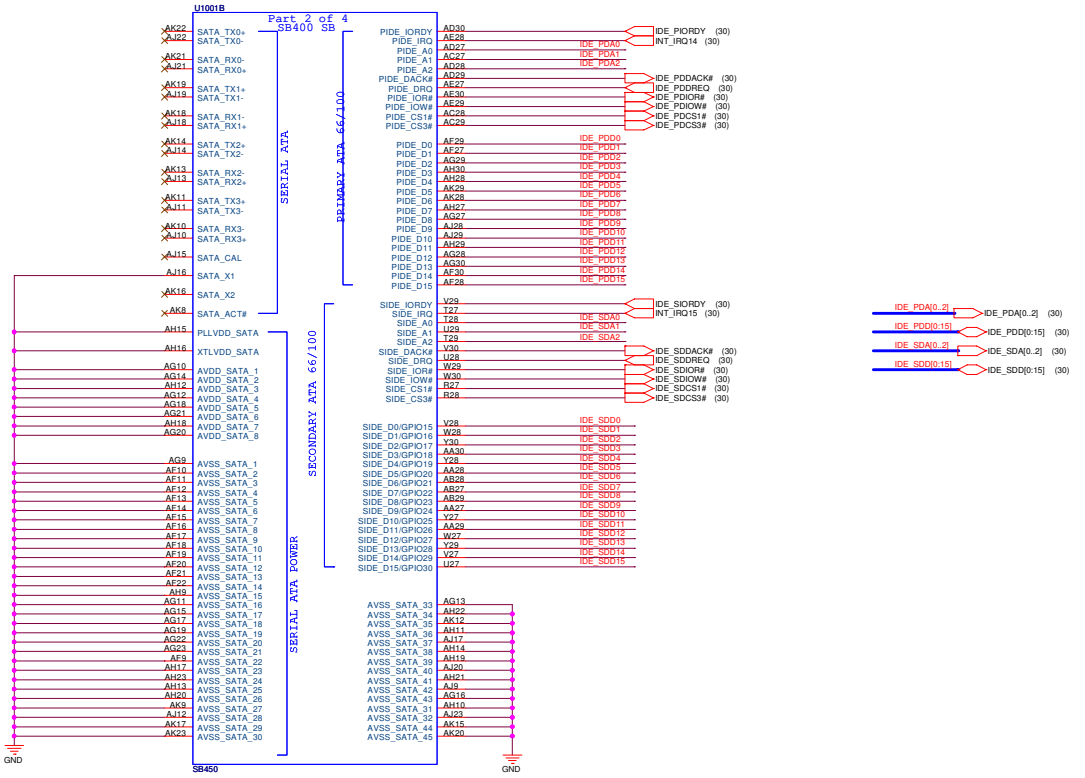

ASUS	Title : SB450 IDE (2)		
<OrgName>	Engineer: Spring LI		
Size: Custom	Project Name: Z94Rp		Rev: 1.1
Date: 星期 , 十月 23, 2006	Sheet 11 of 45		

<< Kennedy_Zhang >>

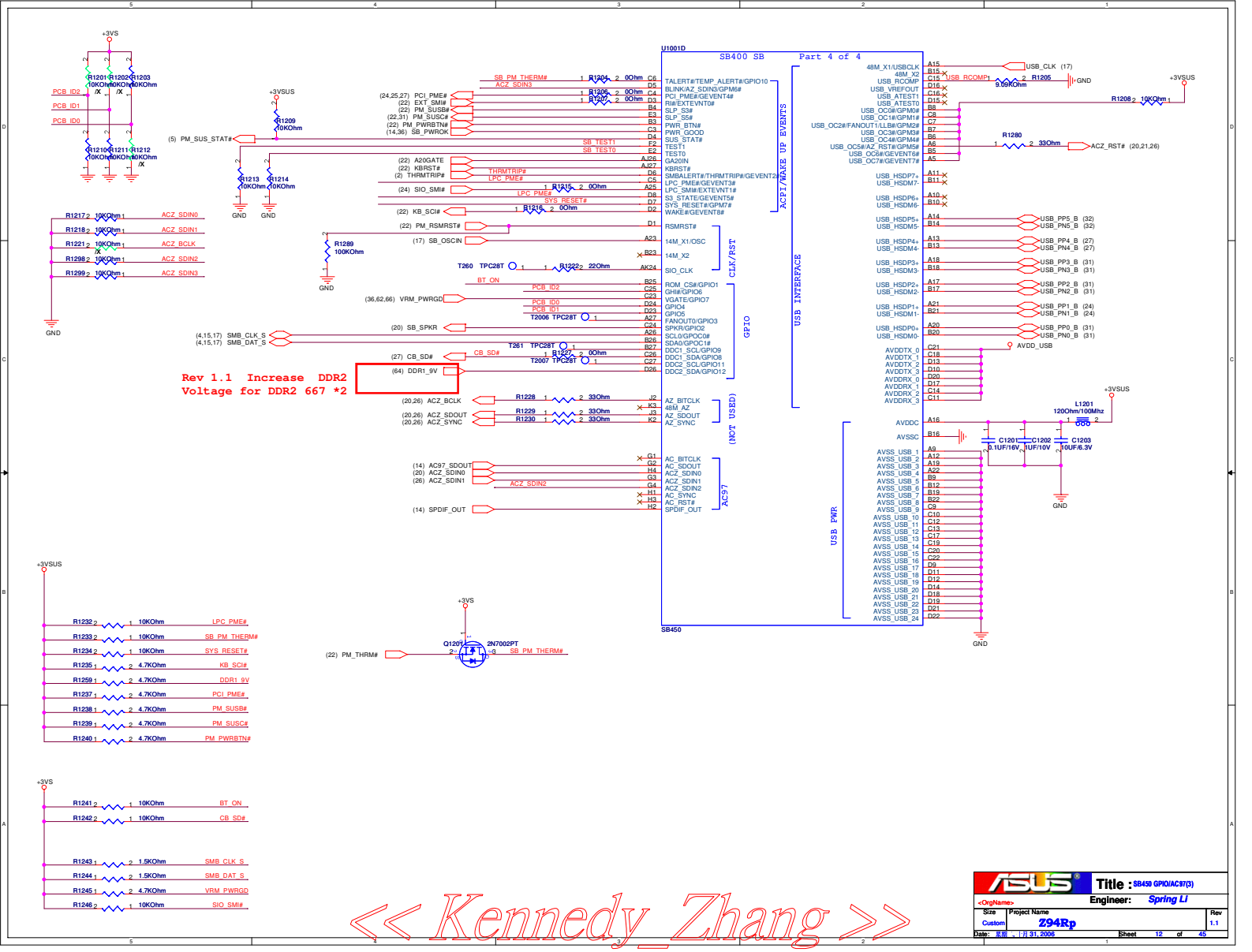
U1001D
SB400 SB
Part 4 of 4
SB450
ACPI/WAKE UP EVENTS
USB INTERFACE
CLK/RST
GPIO
(NOT USED)
AC97
USB PWR
Rev 1.1 Increase DDR2 Voltage for DDR2 667 *2
+3VS
+3VSUS
GND
AVDD_USB
L1201 120Ohm/100Mhz
Q1201 2N7002PT
(22) PM_THRM#
SB_PM_THERM#
Title : SB450 GPIO/AC97(3)
Engineer: Spring Li
Size Custom
Project Name Z94Rp
Rev 1.1
Date: 四月 31, 2006
Sheet 12 of 45
<< Kennedy_Zhang >>

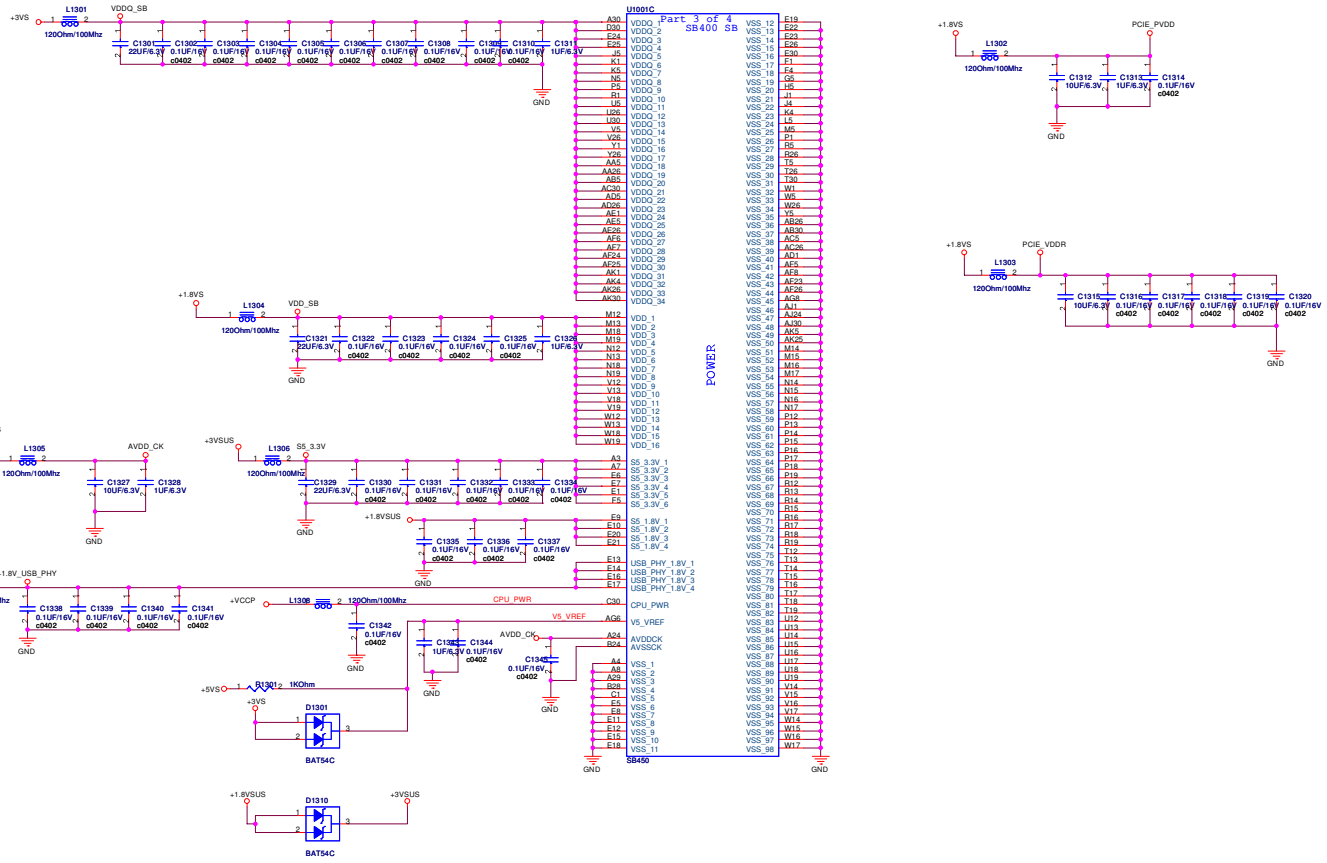

<< Kennedy_Zhang >>

ASUS	Title : SB450 PWR/DECOUPING	
<OrgName>	Engineer: Spring Li	
Size: Custom	Project Name: 294Rp	Rev: 1.1
Date: 星期二, 六月 22, 2006	Sheet 13 of 45	

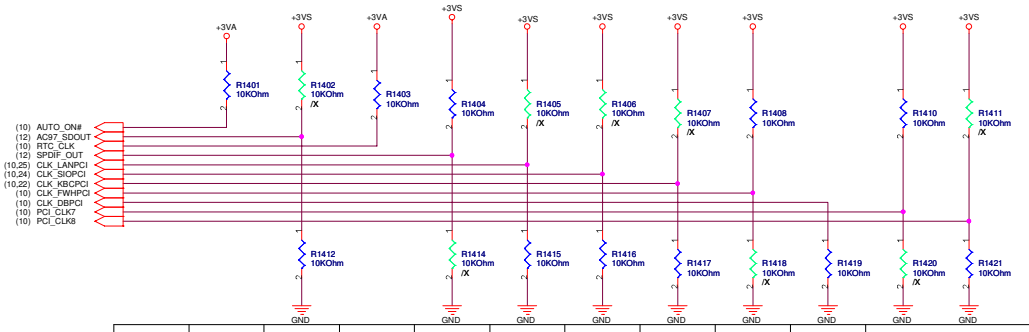

REQUIRED STRAPS

	AUTO_ON#	AC_SDOUT	RTC_CLK	SPDIF_OUT	CLK_LANPCI	CLK_SIOPCI	CLK_KBCPCI	CLK_FWHPCI	CLK_DBPCI	PCI_CLK7	PCI_CLK8
PULL HIGH	MANUAL PWR ON	USE DEBUG STRAPS	INTERNAL RTC	SIO 24MHz	SEE NOTE1	USB PHY PWRDOWN DISABLE	USE USB PLL	SEE NOTE2	CPU I/F = K8	ROM TYPE H,H = PCI ROM H,L = LPC ROM I DEFAULT LPC Address Mapped below 1M L,H = LPC ROM II LPC Address Mapped to top 4G L,L = FWH ROM	
PULL LOW	AUTO PWR ON	IGNORE DEBUG STRAPS	EXTERNAL RTC (NOT SUPPORTED W/ IT8712)	SIO 48MHz		USB PHY PWRDOWN ENABLE	BYPASS USB PLL		CPU I/F = P4		

NOTE

1. USB CLK STRAPPING CHANGE

	A21,A22,A23	A31 AND NEWER
10K PULL UP	OSC/CLOCK BUFFER	CRYSTAL PAD
10K PULL DOWN	CRYSTAL PAD	OSC/CLOCK BUFFER

2. 14MHz CLOCK TYPE STRAPPING

	A11~A31	A32 AND ABOVE
	14MHz CLOCK PAD IS CRYSTAL PAD	PCIE COMMON MODE SETTING
10K PULL UP	CLOCK INPUT BUFFER	PCIE CM_SET LOW
10K PULL DOWN	CRYSTAL PAD	PCIE CM_SET HIGH

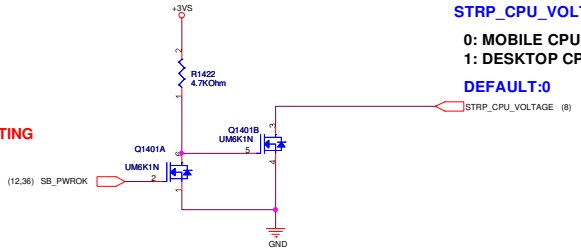

STRP_CPU_VOLTAGE: CPU VCC

0: MOBILE CPU
1: DESKTOP CPU

DEFAULT:0

ASUS	Title : SB450 STRAPS(5)	
<OrgName>	Engineer: Spring Li	
Size: Custom	Project Name: Z94Rp	Rev: 1.1
Date: 星期一, 十月 23, 2006	Sheet 14 of 45	

<< Kennedy_Zhang >>

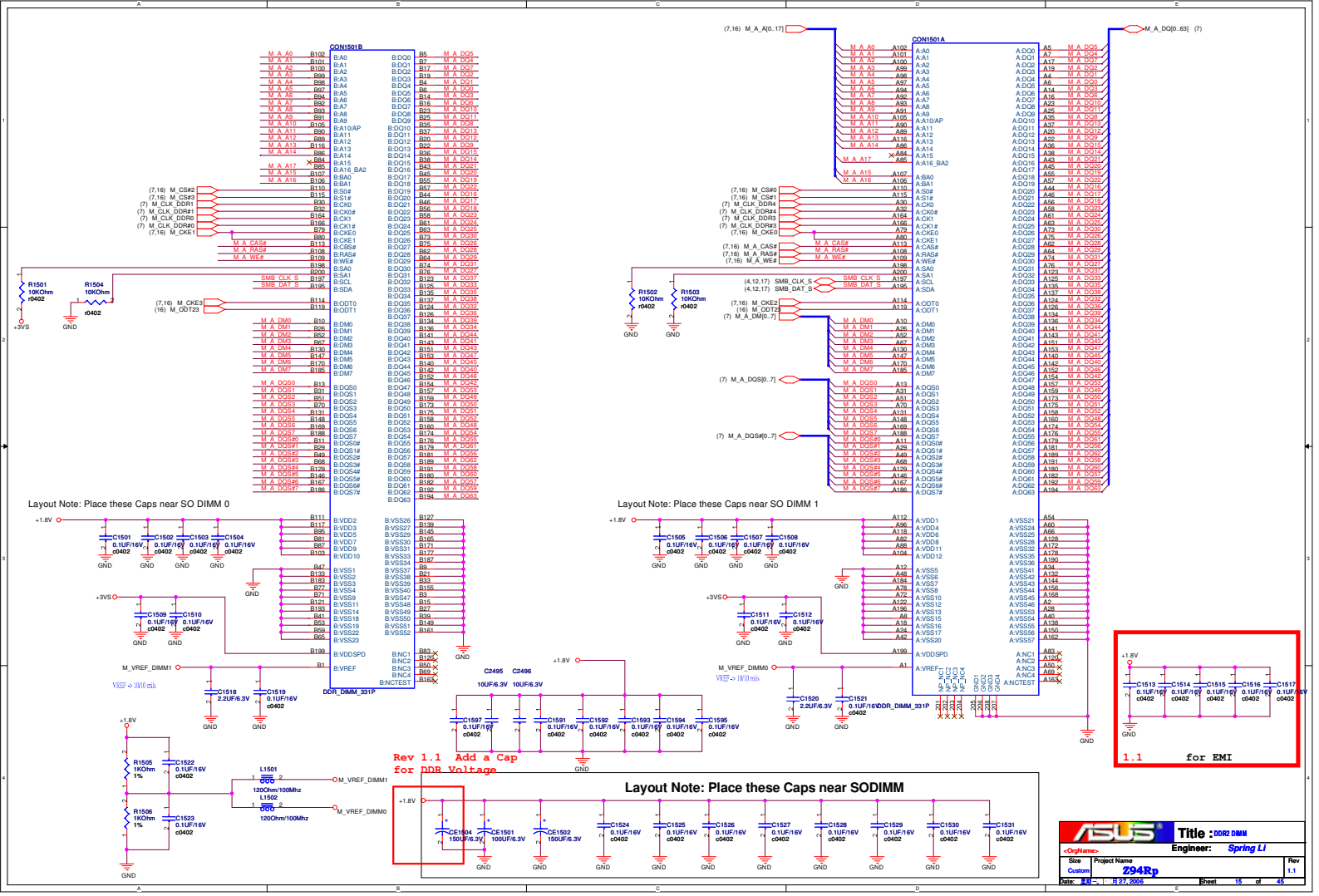

<< Kennedy_Zhang >>

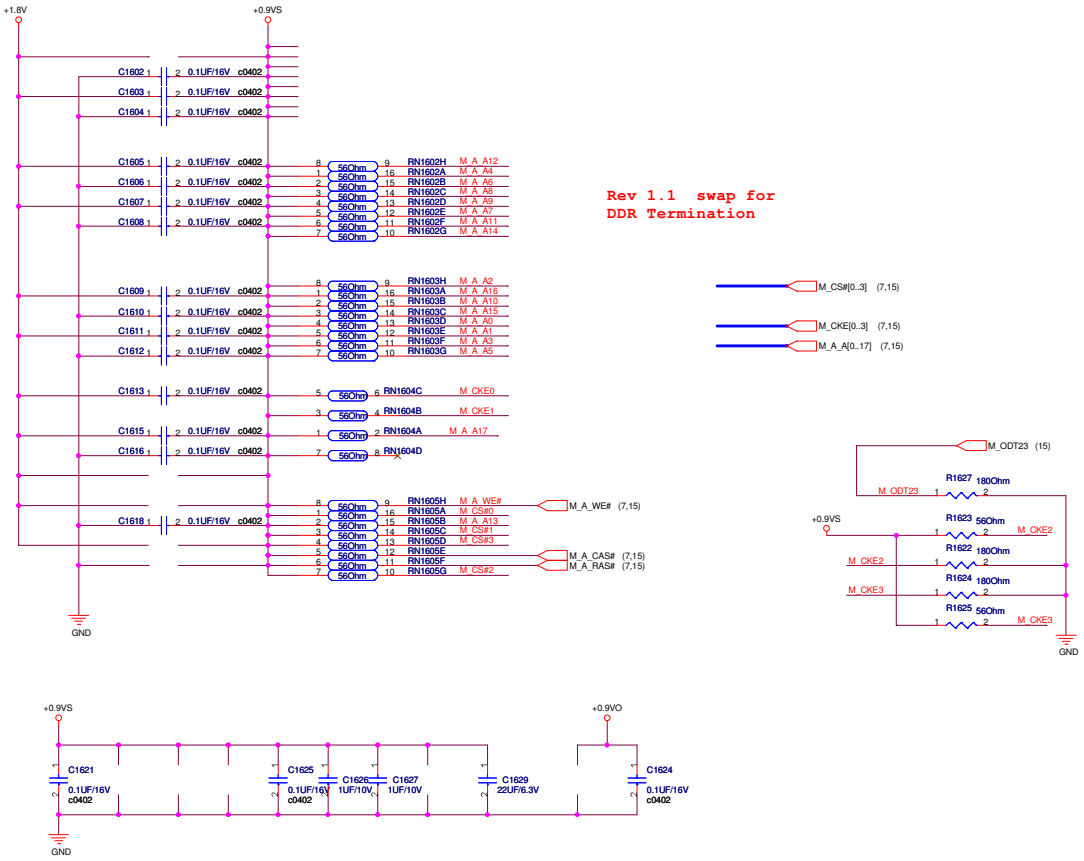

ASUS	Title : DDR2 Termination		
<OrgName>	Engineer: Spring Li		
Size: Custom	Project Name: Z94Rp		Rev: 1.1
Date: 星期三, 十二月 27, 2006	Sheet 16 of 45		

<< Kennedy_Zhang >>

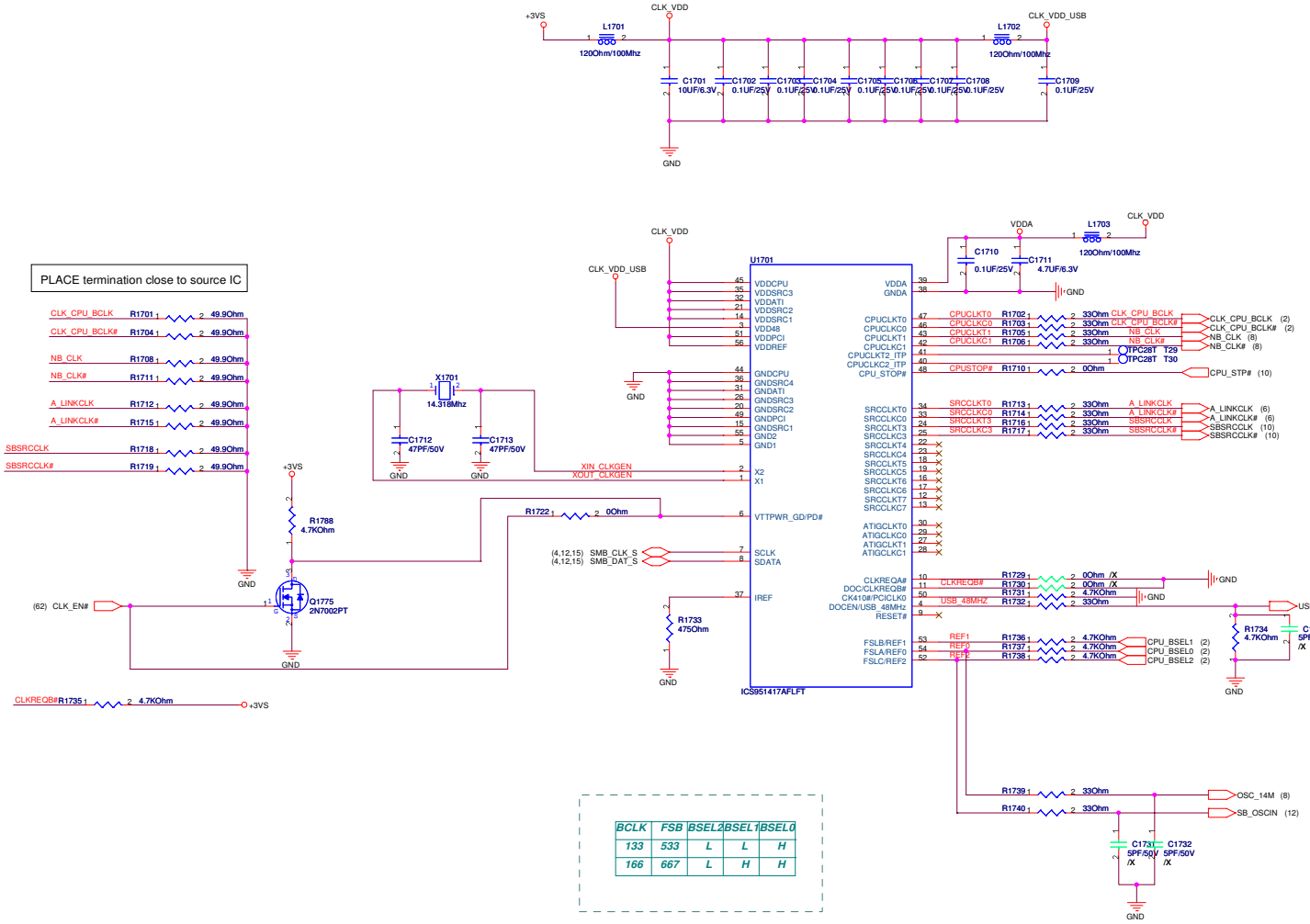

BCLK	FSB	BSEL2	BSEL1	BSEL0
133	533	L	L	H
166	667	L	H	H

ASUS

Title : CLOCK GENERATOR

<OrgName>

Engineer: Spring Li

Size	Project Name	Rev
Custom	Z94Rp	1.1

Date: 星期 , 五月 23, 2006 Sheet 17 of 45

<< Kennedy_Zhang >>

LCD Power

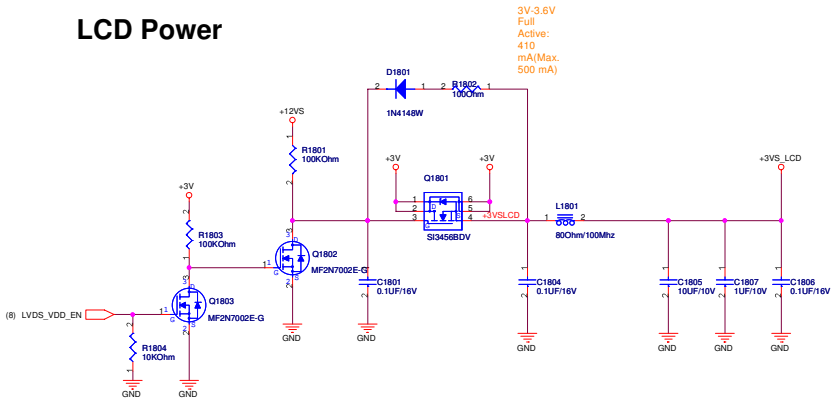

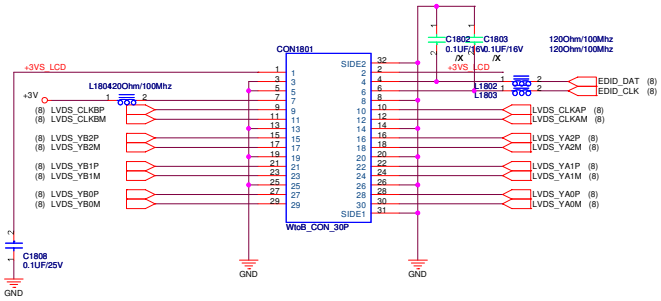

Cable Requirement:
Impedence: 100 ohm +/- 10%
Length Mismatch <= 10 mils
Twisted Pair(Not Ribbon)
Maximum Length <= 16"

LCD LVDS Interface

ASUS	Title : LVDS & INVERTER (CAMERA)	
<OrgName>	Engineer: Spring Li	
Size: Custom	Project Name: Z94Rp	Rev: 1.1
Date: 星期 二, 六月 23, 2006	Sheet 18 of 45	

<< Kennedy_Zhang >>

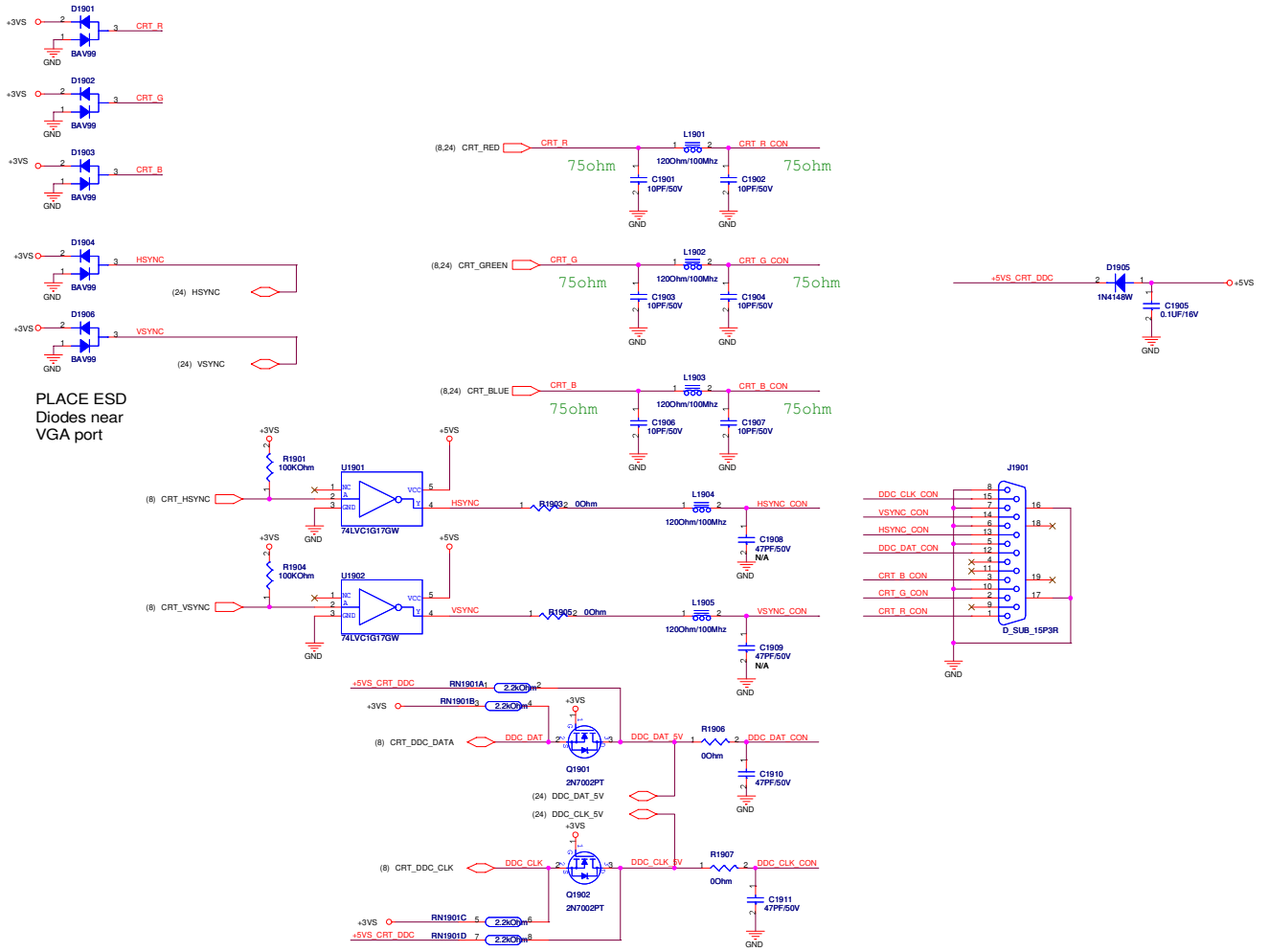

ASUS	Title : CRT CONNECTOR		
<OrgName>	Engineer: Spring LI		
Size Custom	Project Name Z94Rp		Rev 1.1
Date: 星期 , 六月 23, 2006	Sheet 19 of 45		

<< Kennedy_Zhang >>

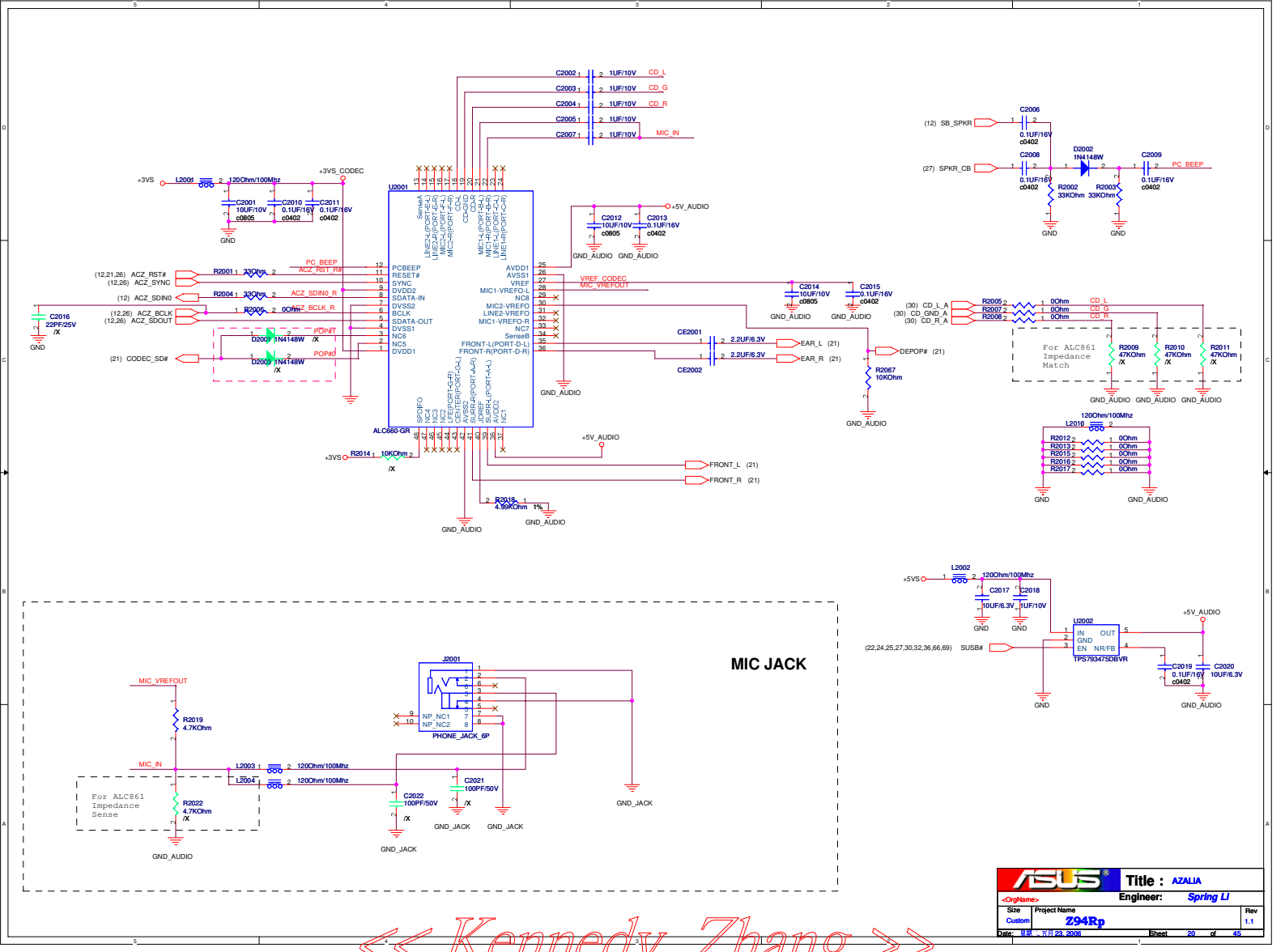

MIC JACK

ASUS	Title : AZALIA		
<OrgName>	Engineer: Spring Li		
Size Custom	Project Name Z94Rp		Rev 1.1
Date: 星期 二, 六月 23, 2009	Sheet 20 of 45		

<< Kennedy_Zhang >>

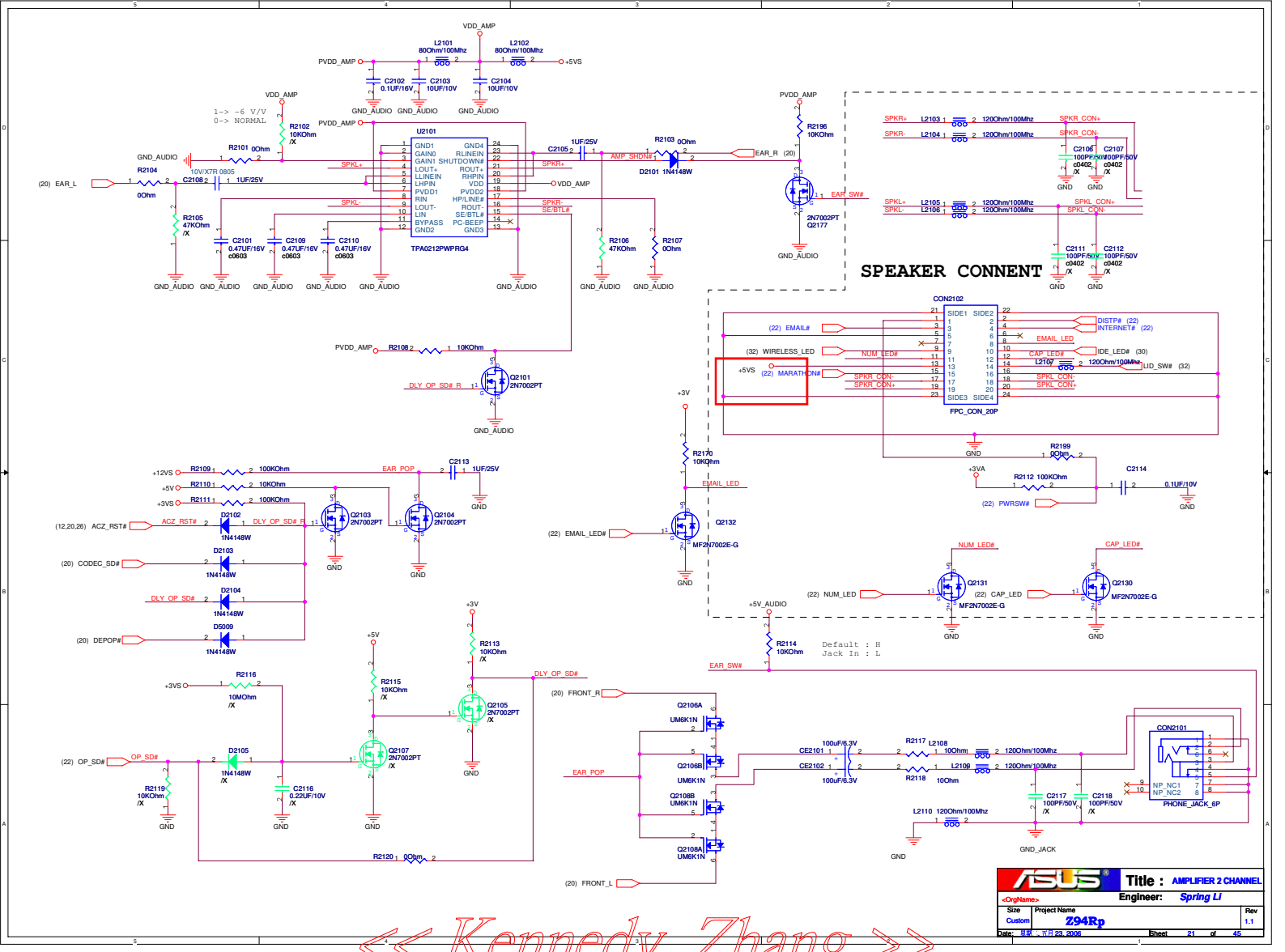

<< Kennedy_Zhang >>

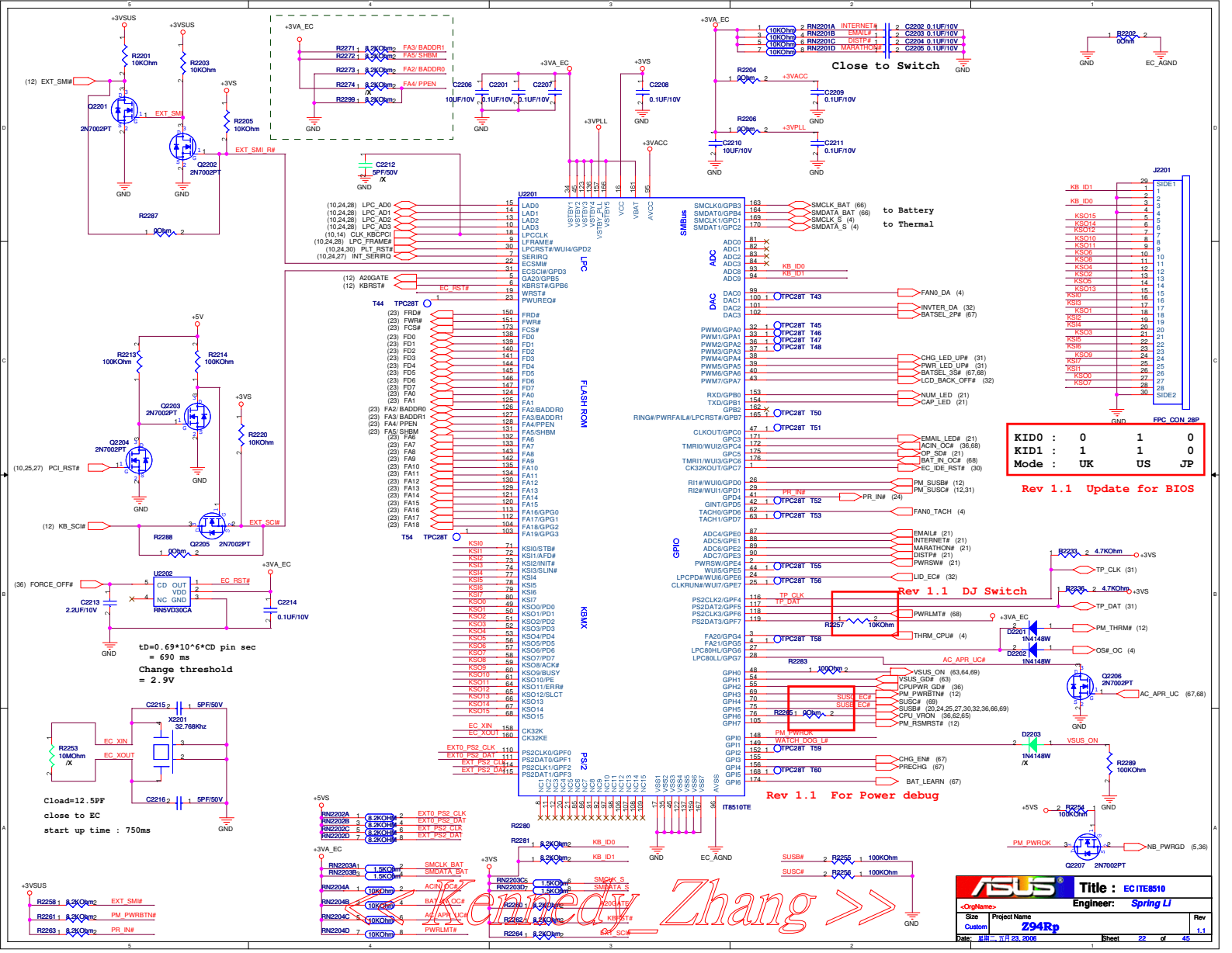
Close to Switch
to Battery
to Thermal
Rev 1.1 Update for BIOS
Rev 1.1 DJ Switch
Rev 1.1 For Power debug
KID0 : 0 1 0
KID1 : 1 1 0
Mode : UK US JP
tD=0.69*10^6*CD pin sec
= 690 ms
Change threshold
= 2.9V
Cload=12.5PF
close to EC
start up time : 750ms
U2201
IT8510TE
J2201
FPC_CON_28P
Title : EC ITE8510
Engineer: Spring Li
Project Name Z94Rp
Rev 1.1
Sheet 22 of 45
Kenady Zhang >>

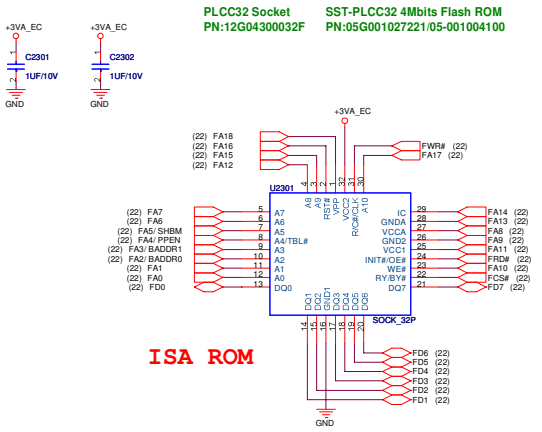

ASUS	Title : ISA ROM & SPI ROM	
<OrgName>	Engineer: Spring Li	
Size: Custom	Project Name: Z94Rp	Rev: 1.1
Date: 星期一, 六月 23, 2008	Sheet 23 of 45	

<< Kennedy_Zhang >>

Super I/O

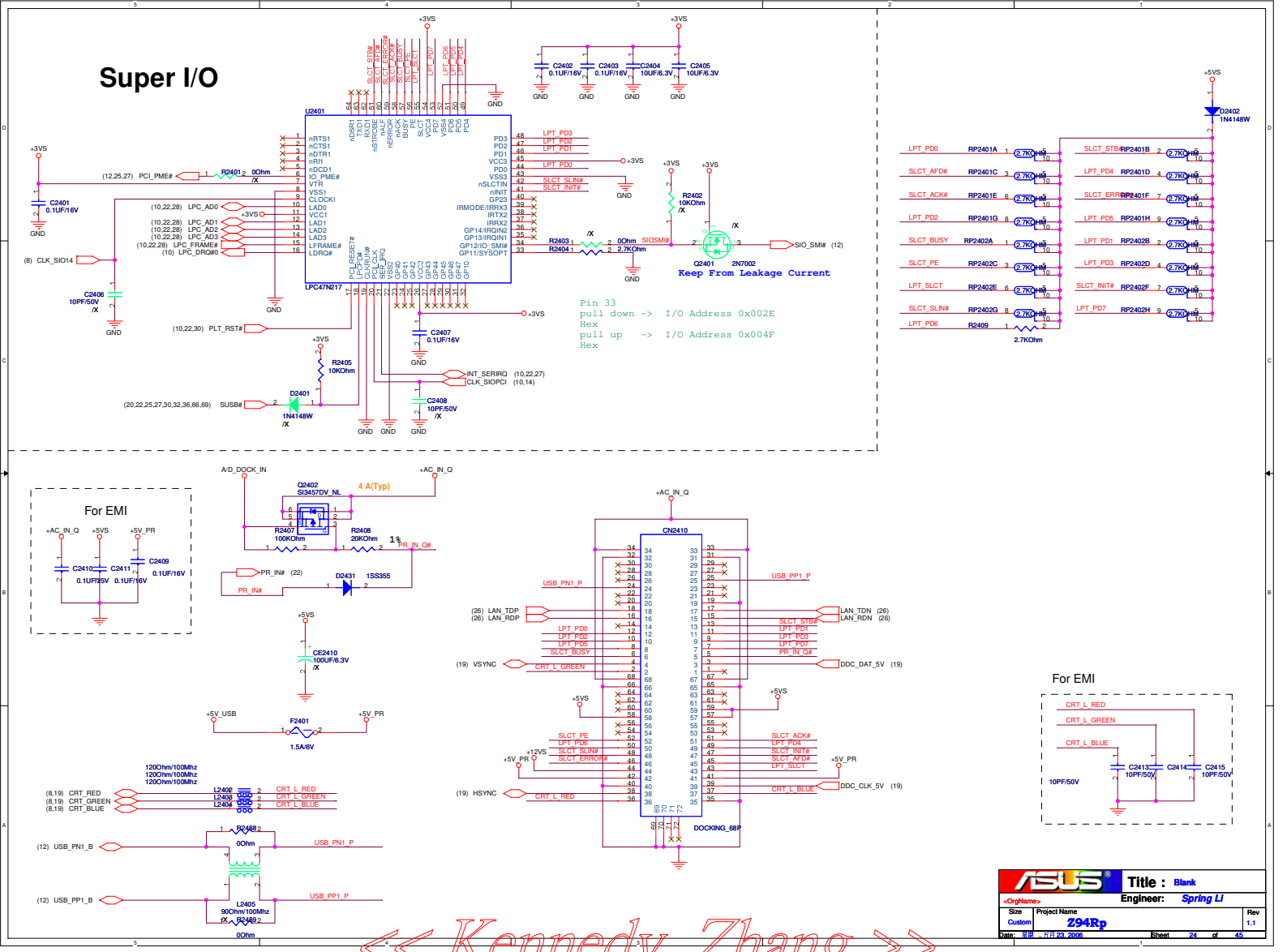

<< Kennedy_Zhang >>

ASUS	Title : Blank		
<OrgName>	Engineer: Spring Li		
Size: Custom	Project Name: Z94Rp		Rev: 1.1
Date: 星期 二, 十月 23, 2006	Sheet 24 of 45		

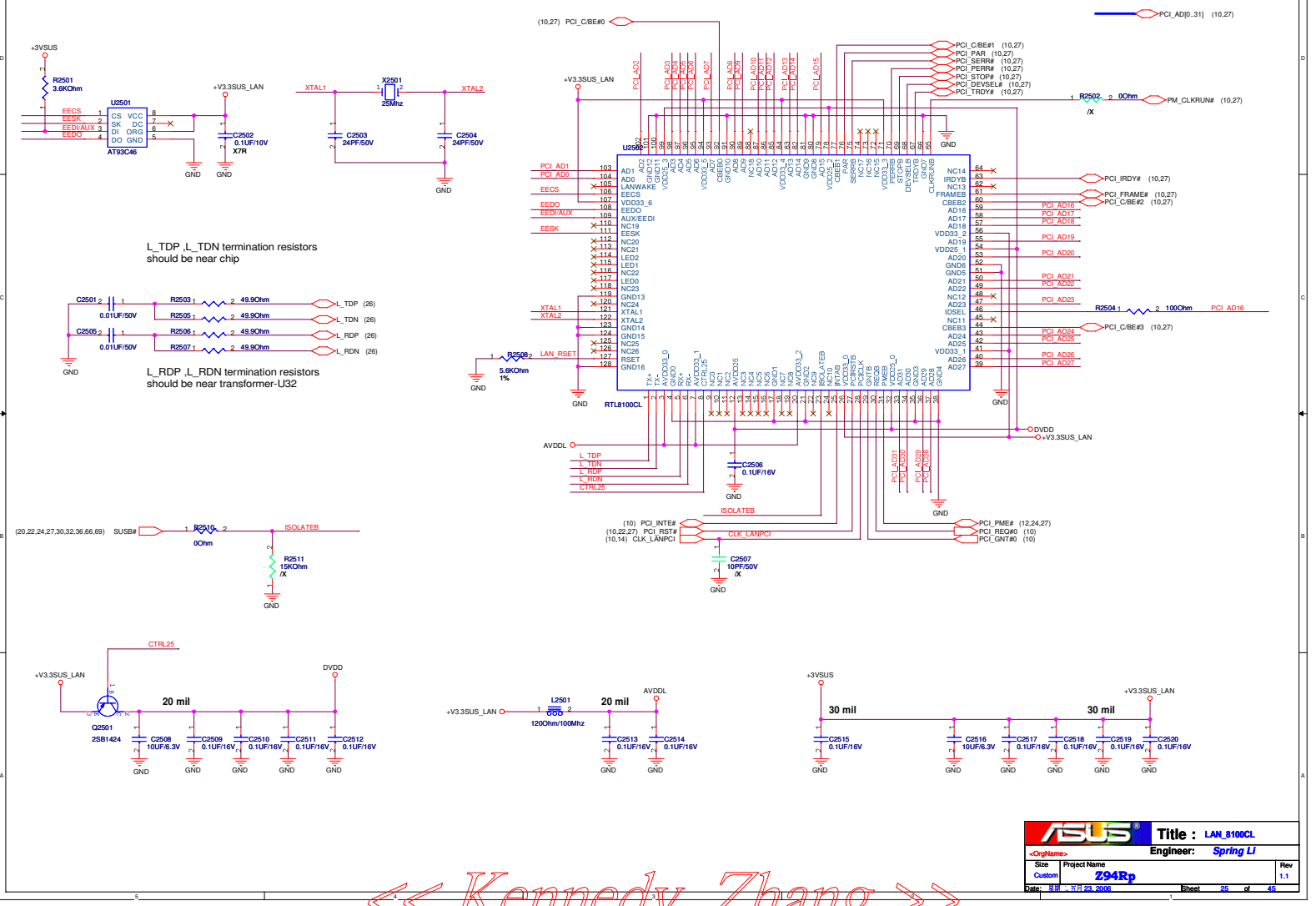

ASUS	Title : LAN_8100CL		
<OrgName>	Engineer: Spring Li		
Size: Custom	Project Name: Z94Rp		Rev: 1.1
Date: 星期 二, 六月 23, 2006	Sheet 25 of 45		

<< Kennedy_Zhang >>

LAN PORT

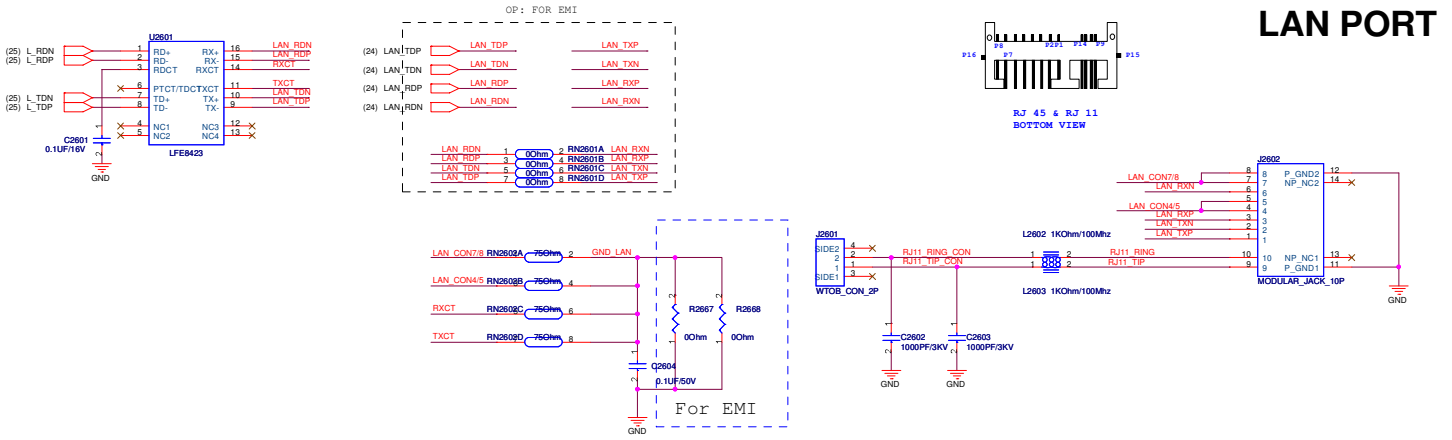

MDC

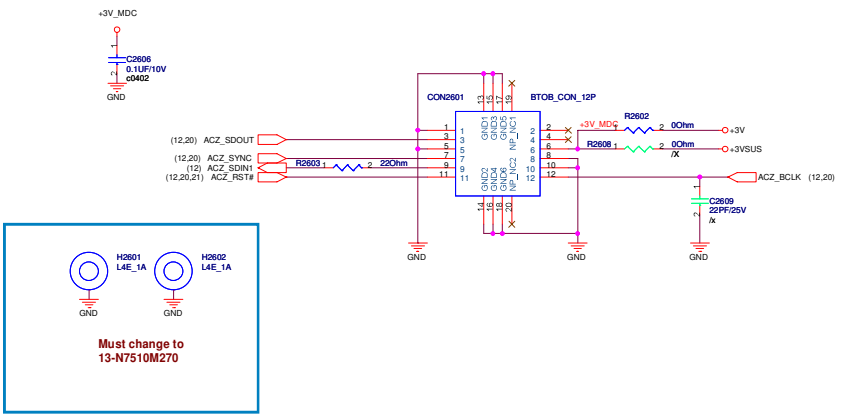

ASUS	Title : RJ11+45 & MDC		
<OrgName>	Engineer: Spring Li		
Size: Custom	Project Name: Z94Rp		Rev: 1.1
Date: 星期 二, 六月 23, 2006	Sheet 26 of 45		

<< Kennedy_Zhang >>

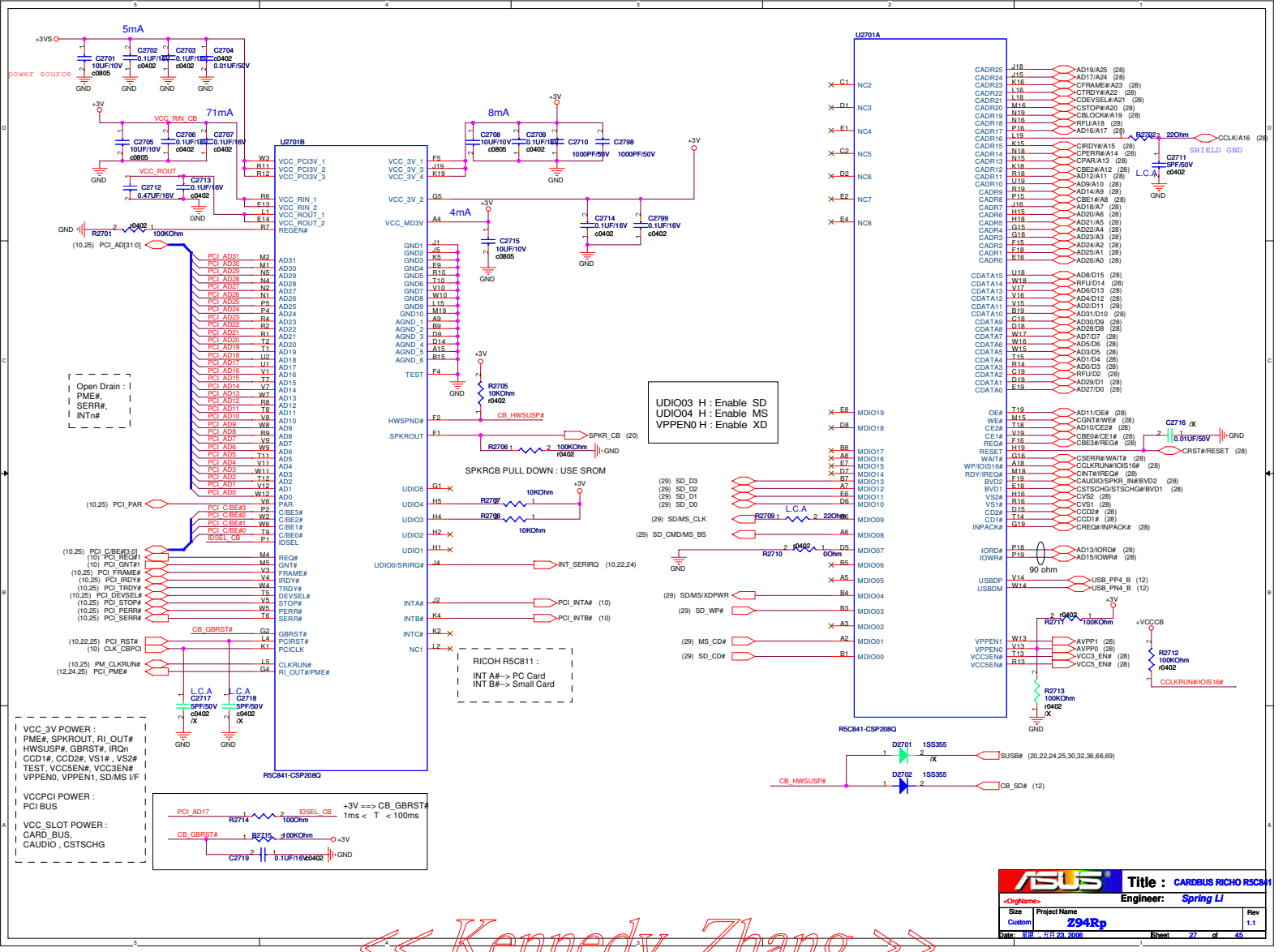

Title : CARDBUS RICHO R5C841		
<OrgName>	Engineer: Spring Li	
Size: Custom	Project Name: Z94Rp	Rev: 1.1
Date: 星期 二, 六月 23, 2006	Sheet 27 of 45	

<< Kennedy_Zhang >>

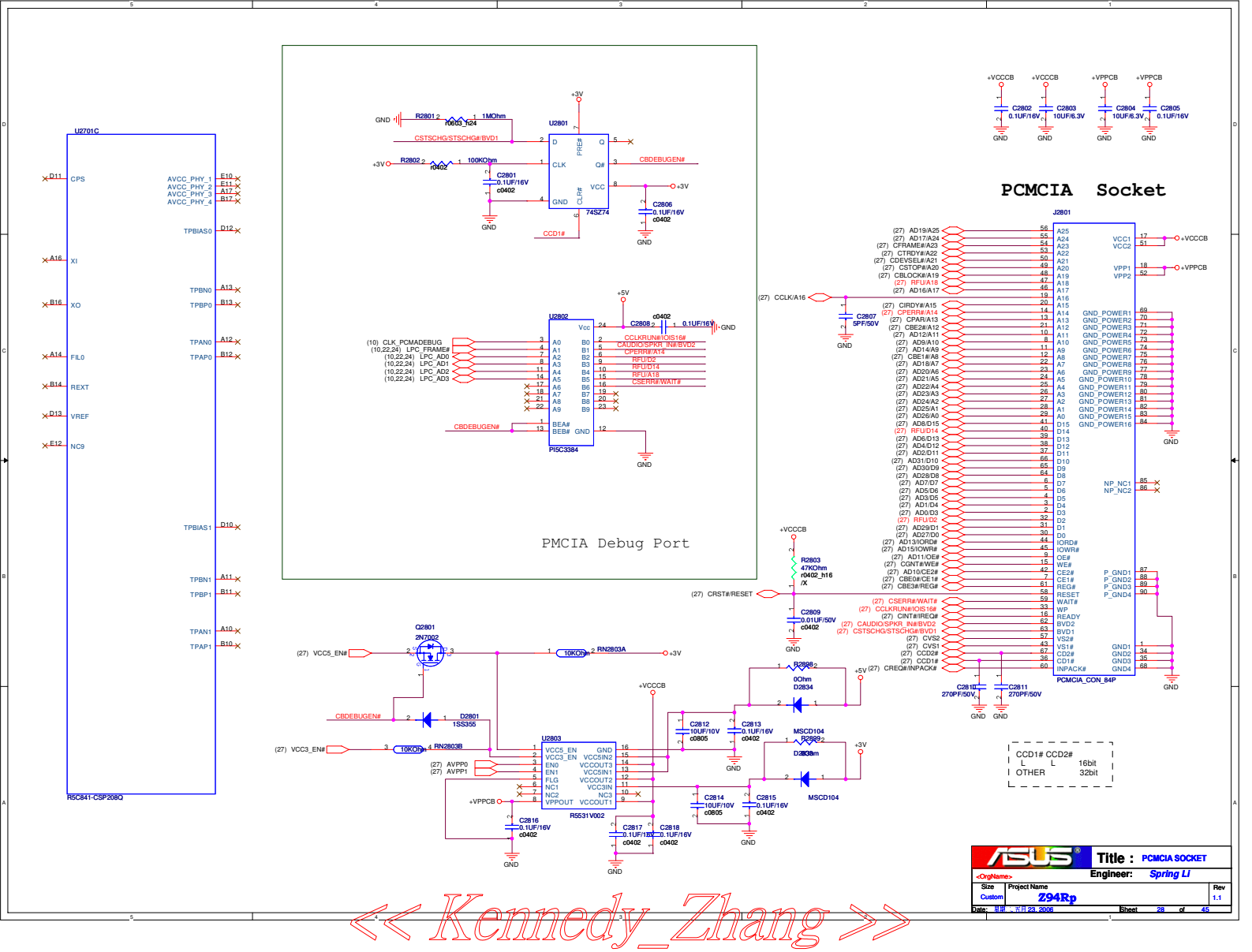

<< Kennedy_Zhang >>

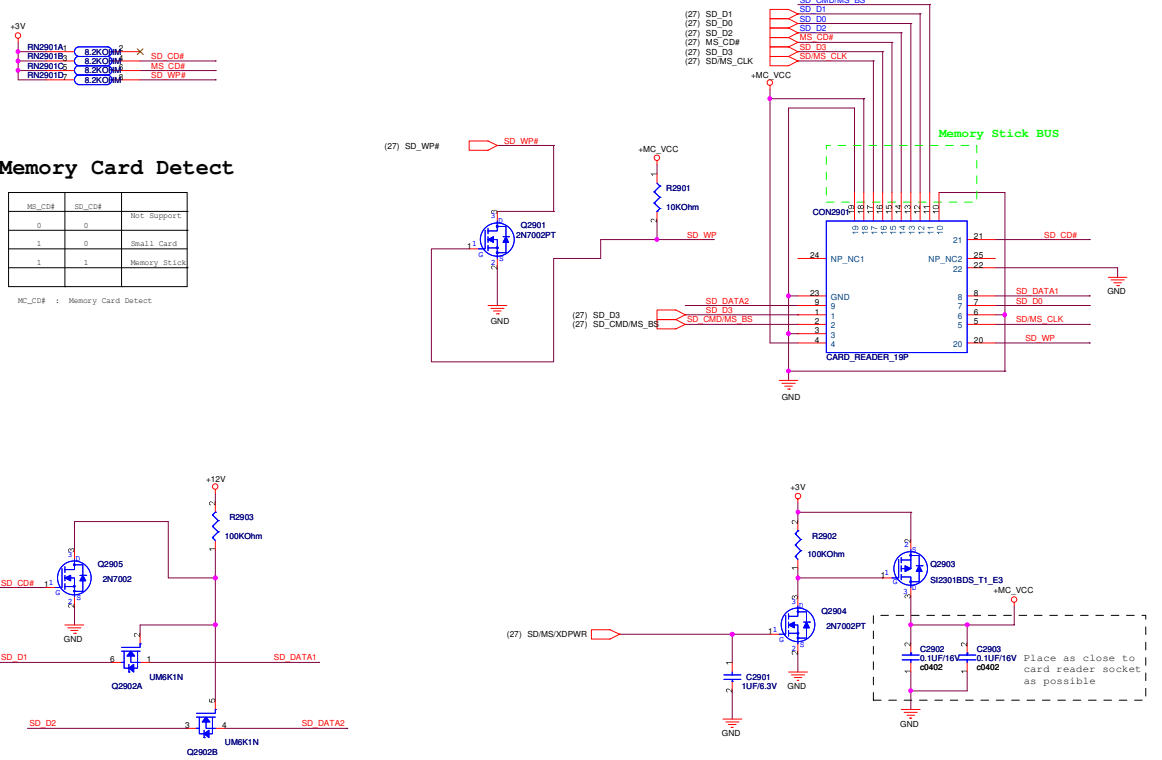

Title : 4 IN 1 CON

<OrgName>

Engineer: Spring Li

Size	Project Name	Rev
Custom	Z94Rp	1.1

Date: 星期 , 二 月 26, 2008 Sheet 29 of 45

<< Kennedy_Zhang >>

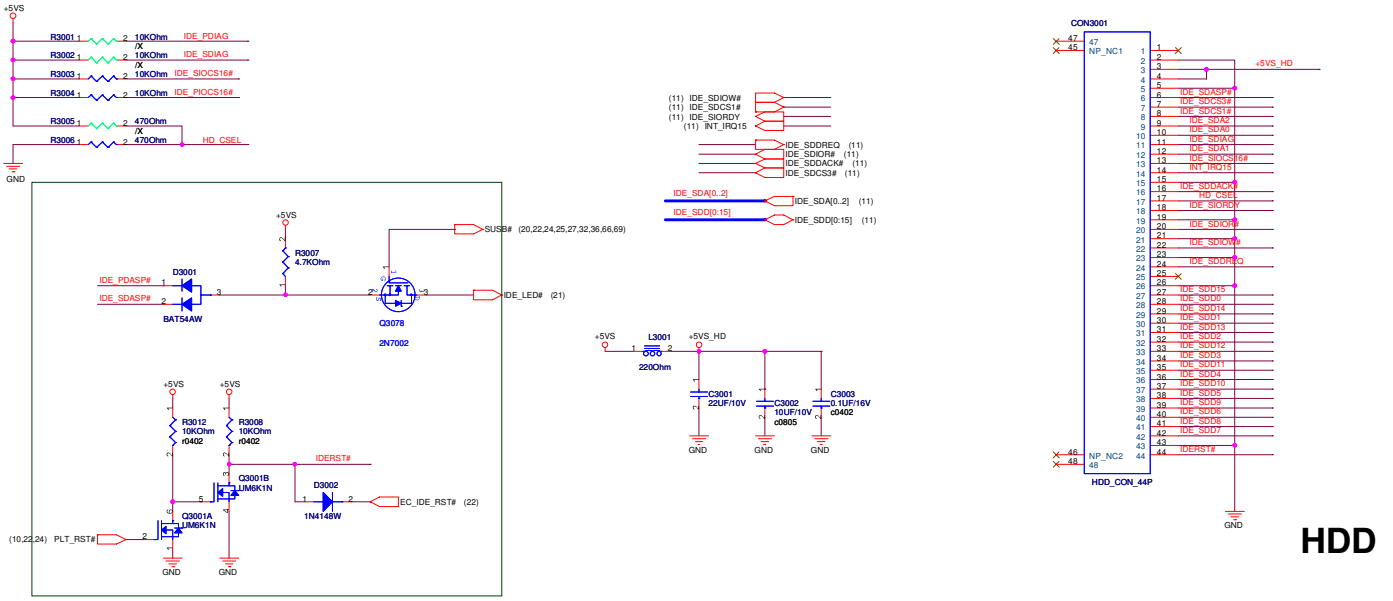

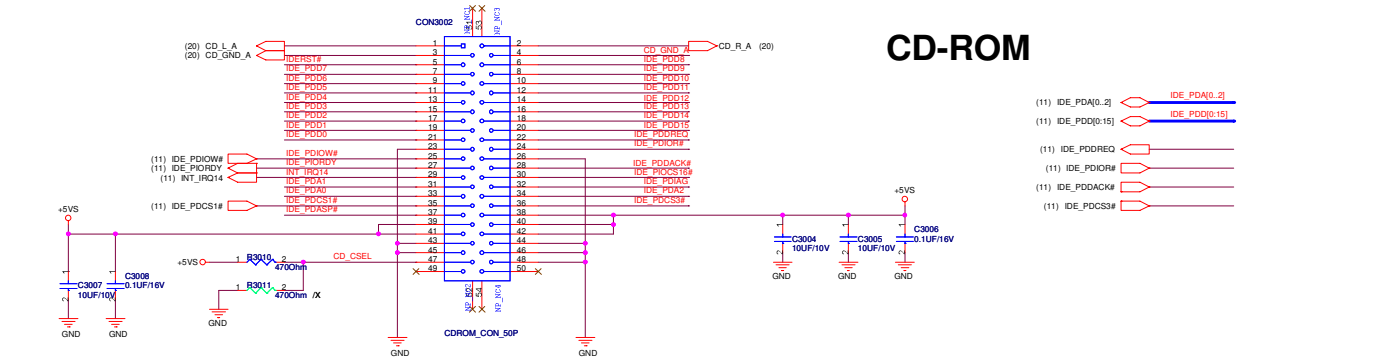

ASUS	Title : HDD & CD-ROM		
<OrgName>	Engineer: Spring Li		
Size: Custom	Project Name: Z94Rp		Rev: 1.1
Date: 星期 二, 六月 23, 2006	Sheet 30 of 45		

<< Kennedy_Zhang >>

USB

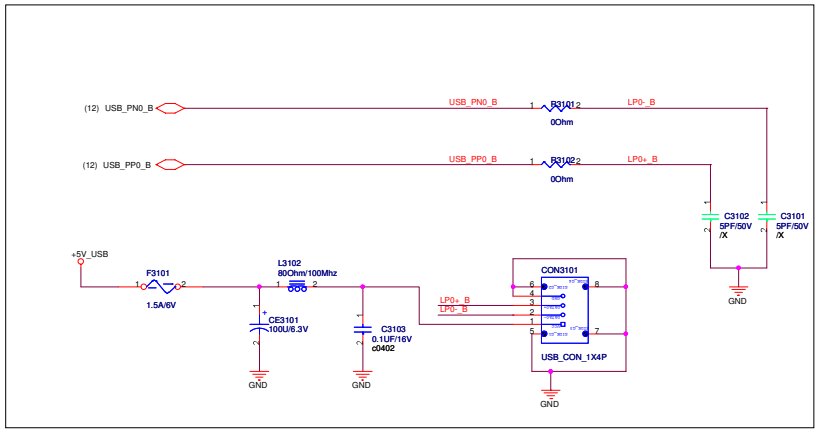

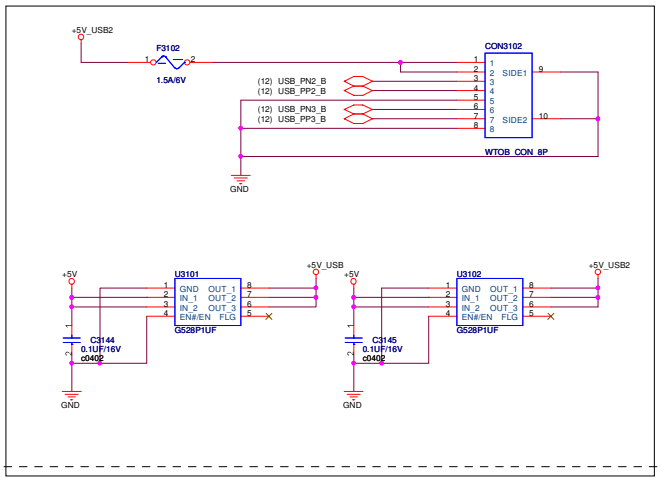

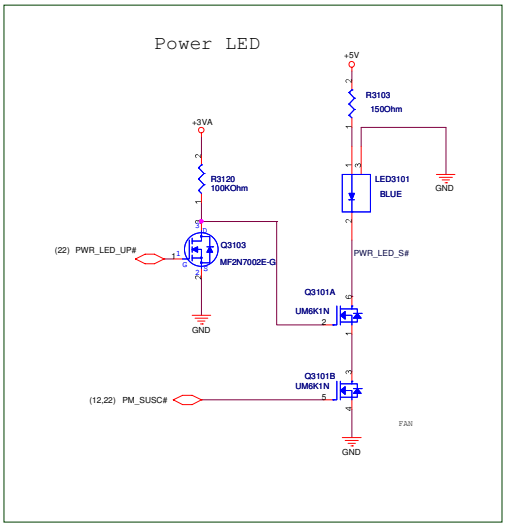

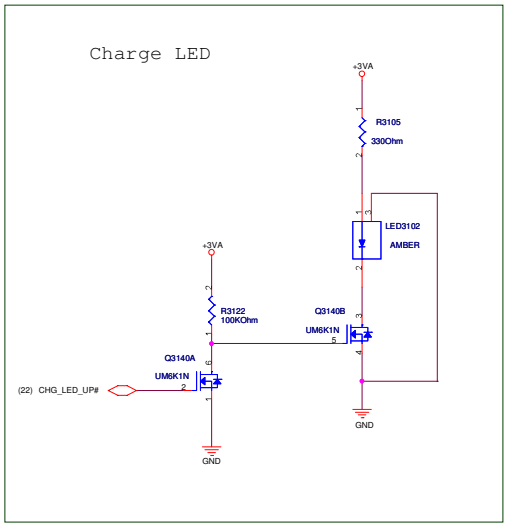

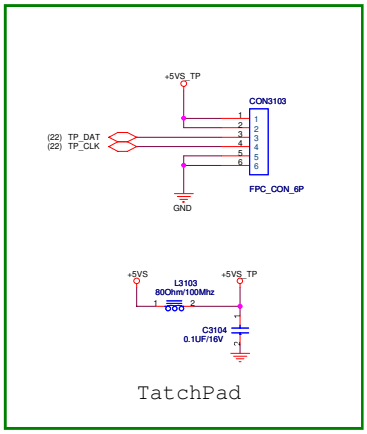

ASUS	Title : USB / LED / TP		
<OrgName>	Engineer: Spring Li		
Size: Custom	Project Name: Z94Rp		Rev: 1.1
Date: 星期 二, 六月 23, 2006	Sheet 31 of 45		

<< Kennedy_Zhang >>

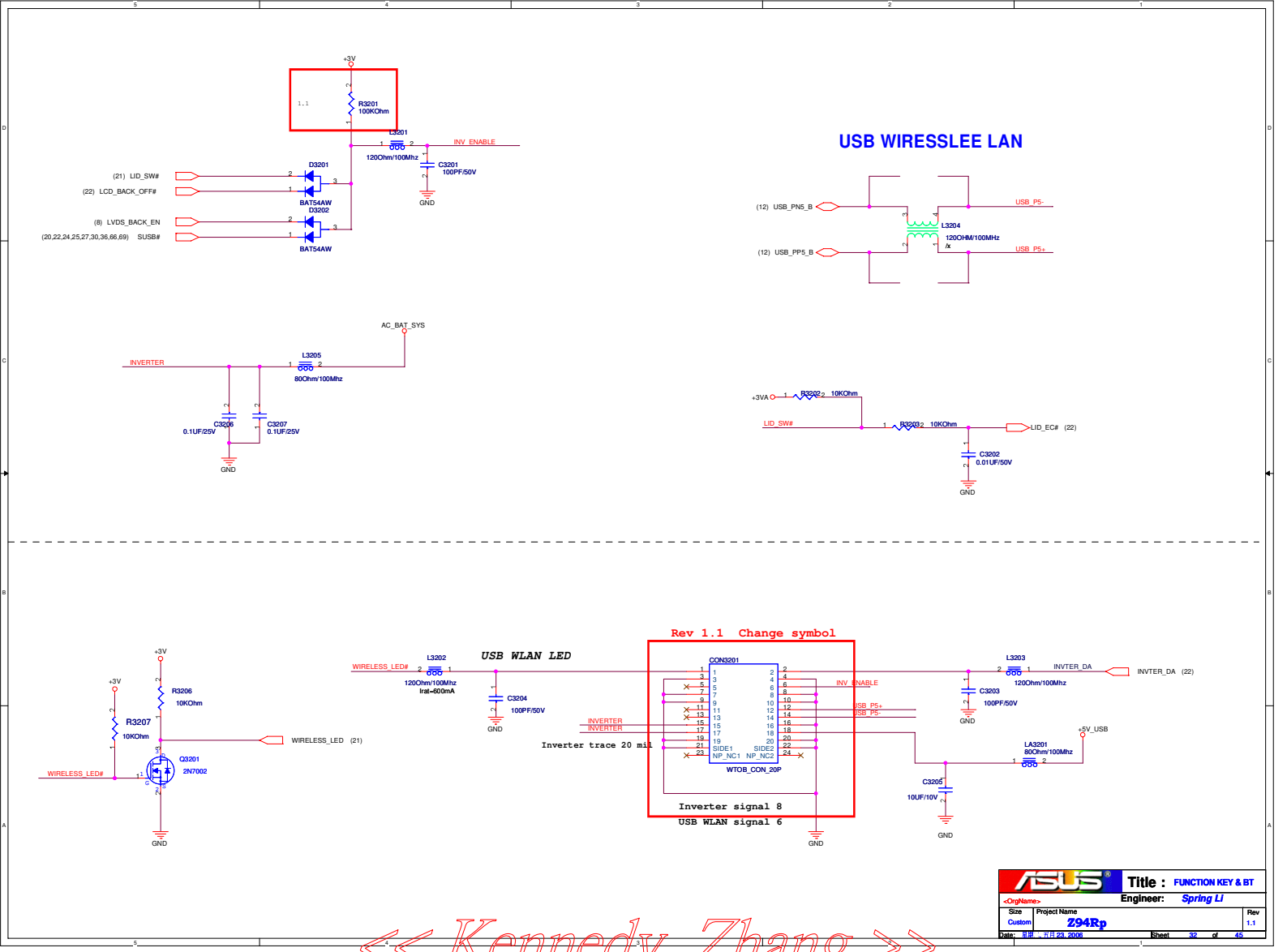

ASUS	Title : FUNCTION KEY & BT		
<OrgName>	Engineer: Spring LI		
Size Custom	Project Name Z94Rp		Rev 1.1
Date: 星期 二, 六月 23, 2006	Sheet 32 of 45		

<< Kennedy_Zhang >>

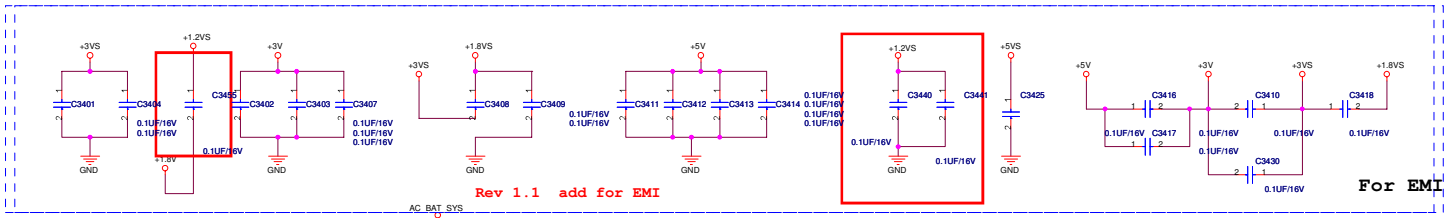

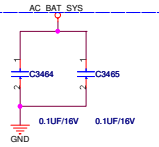

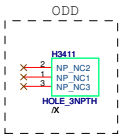

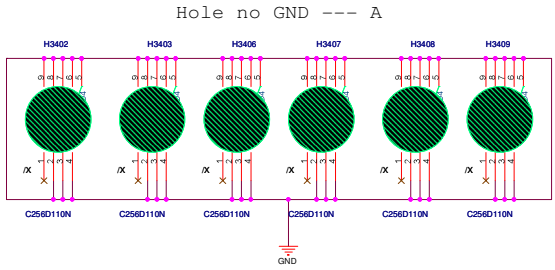

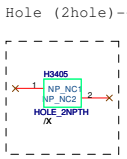

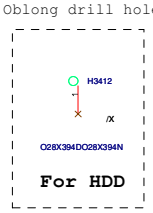

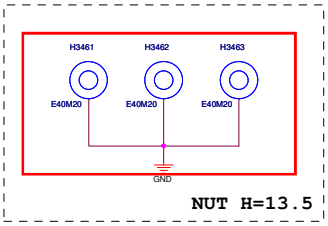

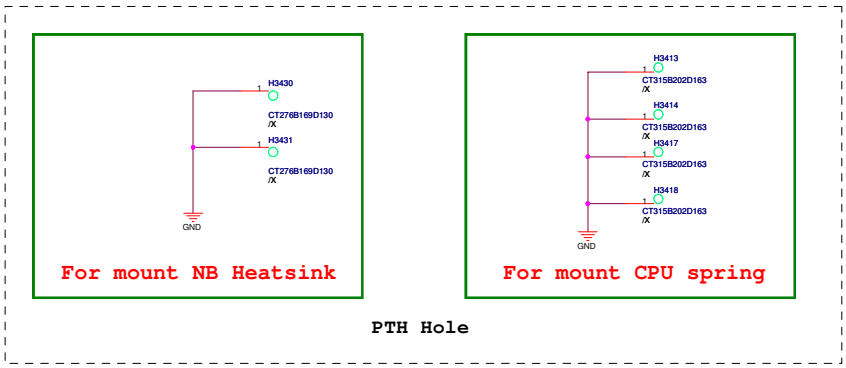

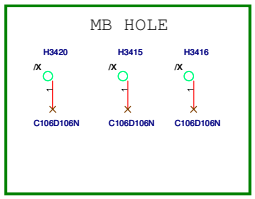

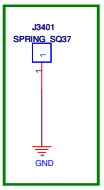

ASUS	Title : Hole		
<OrgName>	Engineer: Spring Li		
Size Custom	Project Name Z94Rp		Rev 1.1
Date: 星期四, 六月 18, 2006	Sheet 33 of 45		

<< Kennedy_Zhang >>

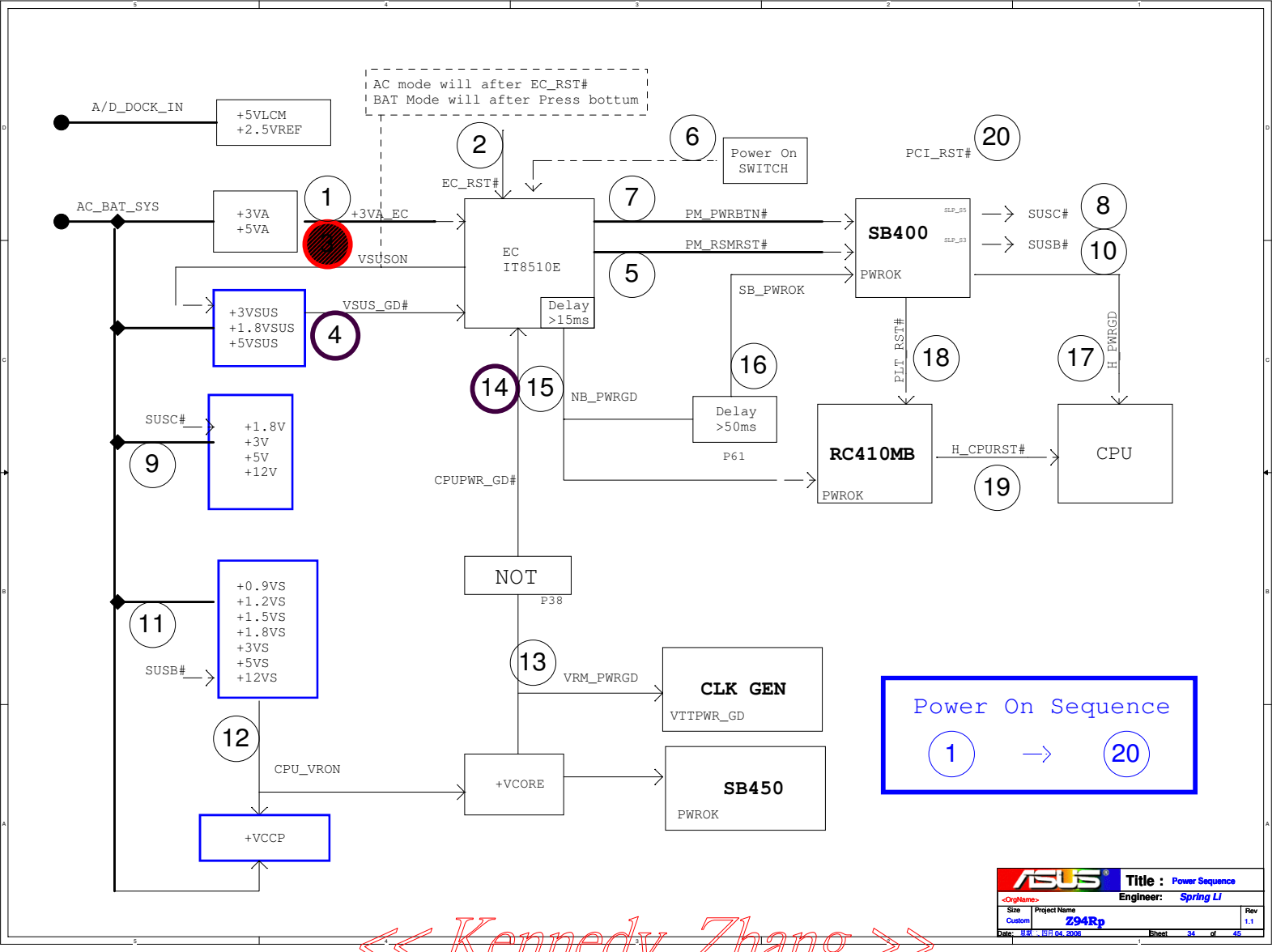

<< Kennedy_Zhang >>

PCI Device	IDSEL#	REQ/GNT#	Interrupts
10/100 LAN	AD16	0	E
CARD READER	AD17	1	B
CARDBUS	AD17	1	A

SM-Bus Device	SM-Bus Address
Clock Generator	1101001x (D2)
SO-DIMM 0	1010000x (A0)
SO-DIMM 1	1010001x (A2)
Thermal Sensor	0101110x (5C)

SB400 GPIO TABLE

GPIO	TYPE	POWER DOMAIN	FUNCTION
GPIO 0	I/OD	S0	
GPIO 1	I/O	S0	
GPIO 2	I/O	S0	SB_SPKR
GPIO 3	I/O	S0	
GPIO 4	I/O	S0	PCB_ID0
GPIO 5	I/O	S0	PCB_ID1
GPIO 6	I/OD	S0	PCB_ID2
GPIO 7	I/O	S0	VRM_PWRGD
GPIO 8	I/O	S0	CB_SD#
GPIO 9	I/O	S0	BACK_OFF#
GPIO 10	I/O	S5	SB_PM_THERM#
GPIO 11	I/O	S0	
GPIO 12	I/O	S0	
GPIO 13	I/O	S0	
GPIO 14	I/O	S0	PCI_GNT#5
GPIO 31	I/O	S0	
GPIO 32	I/O	S0	PCI_GNT#6
GPIO 33	I/O	S0	PCI_INTE#
GPIO 34	I/O	S0	PCI_INTF#
GPIO 35	I/O	S0	PCI_INTG#
GPIO 36	I/O	S0	PCI_INTH#
GPM 0	I	S5	
GPM 1	I	S5	
GPM 2	I/O	S5	
GPM 3	I	S5	
GPM 4	I	S5	
GPM 5	I	S5	
GPM 6	I/OD	S5	PWRLED_1HZ
GPM 7	I	S5	SYS_RESET#
GEVENT 0	I	S5	
GEVENT 1	I	S0	
GEVENT 2	I	S5	THRMTRIP#
GEVENT 3	I	S5	LPC_PME#
GEVENT 4	I	S5	PCI_PME#
GEVENT 5	I	S5	H_PROCHOT#
GEVENT 6	I	S5	
GEVENT 7	I	S5	
GEVENT 8			KB_SCI
EXTEVENT#0			EXT_SMI#
EXTEVENT#1			SIO_SMI#

KBC GPIO	W1V	Note
P23(Pin 35)	CHG_FULL_OC	
P22(Pin 36)	BAT_LEARN	
P21(Pin 37)	LID_EC#	
P20(Pin 38)	KBCRSM	
P42(Pin 23)		
P43(Pin 22)	OP_SD#	
P44(Pin 21)	KB_CPURST	
P45(Pin 20)	KB_GATEA20	
P46(Pin 19)	KBCSCI#	
P47(Pin 18)	PM_CLKRUN#	
P50(Pin 17)	BAT_LLOW#_OC	
P51(Pin 16)	KID0	
P52(Pin 15)	KID1	
P53(Pin 14)		
P54(Pin 13)	BAT_SEL#	
P55(Pin 12)	BAT1_IN#_OC	
P56(Pin 11)		
P57(Pin 10)	INV_DA	
P67(Pin 74)		
P66(Pin 75)		
P65(Pin 76)	GAIN_AMP_K#	0->6 V/V 1->NORMAL
P64(Pin 77)	ACIN_OC	
P63(Pin 78)	DISTP#	
P62(Pin 79)	MARATHON#	
P61(Pin 80)	INTERNET#	
P60(Pin 1)	EMAIL#	
P75(Pin 4)	KB_CLK	
P74(Pin 5)	MS_CLK	
P73(Pin 6)	TPAD_CLK	
P72(Pin 7)	KB_DAT	
P71(Pin 8)	MS_DAT	
P70(Pin 9)	TPAD_DAT	
P77(Pin 2)	SMC_BAT	
P76(Pin 3)	SMD_BAT	
P27(Pin 31)		
P26(Pin 32)	NUM_LED#	
P25(Pin 33)	CAP_LED#	
P24(Pin 34)	SET_PLTRSTNS#	
P40(Pin 27)	EXT_SMI	
P41(Pin 26)	EMAIL_LED#	

ASUS Title : SYSTEM RESOURCE

<OrgName> Engineer: Spring LI

Size	Project Name	Rev
Custom	Z94Rp	1.1

Date: 星期 二, 四月 04, 2006 Sheet 35 of 45

<< Kennedy_Zhang >>

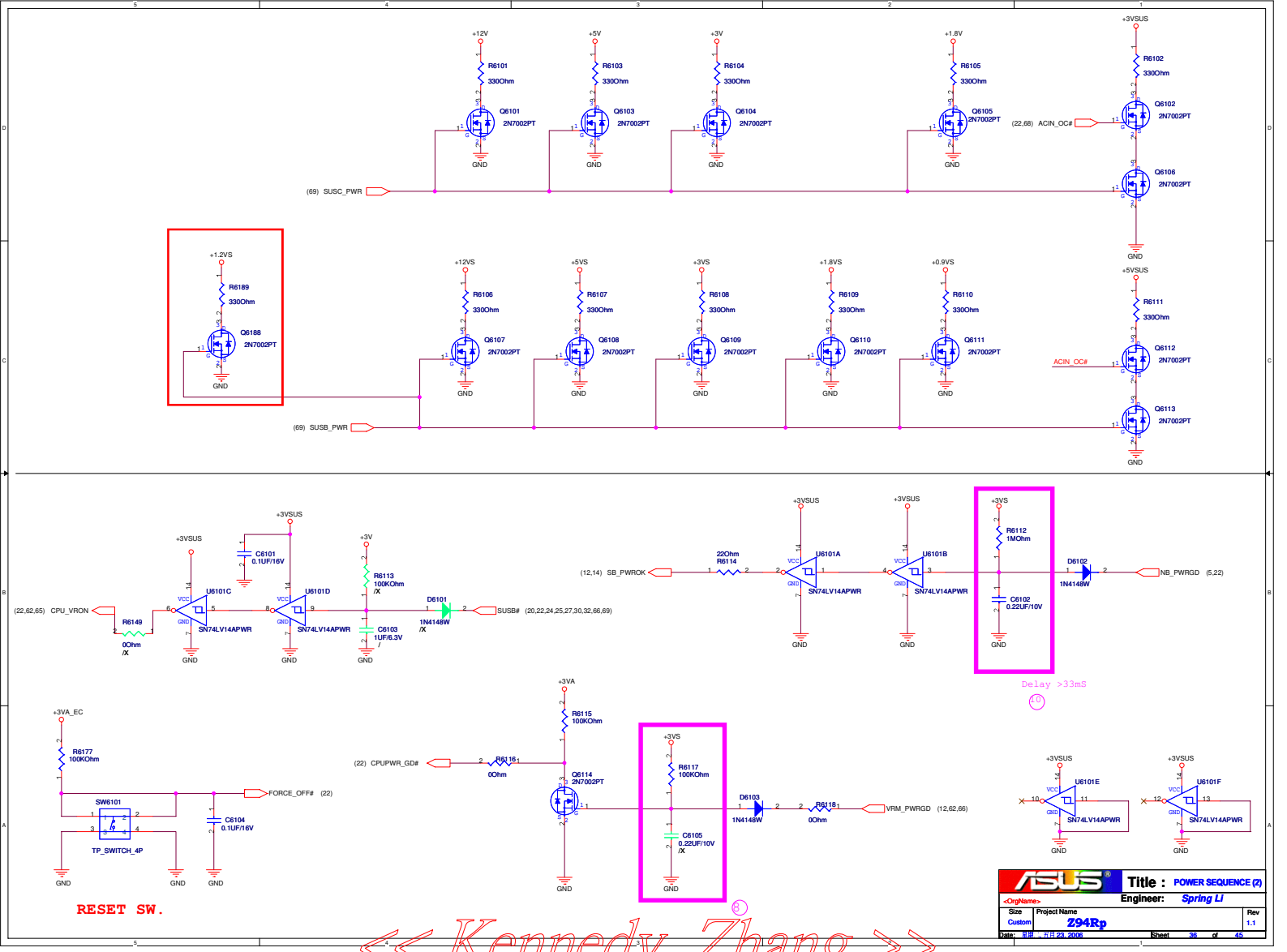

<< Kennedy_Zhang >>

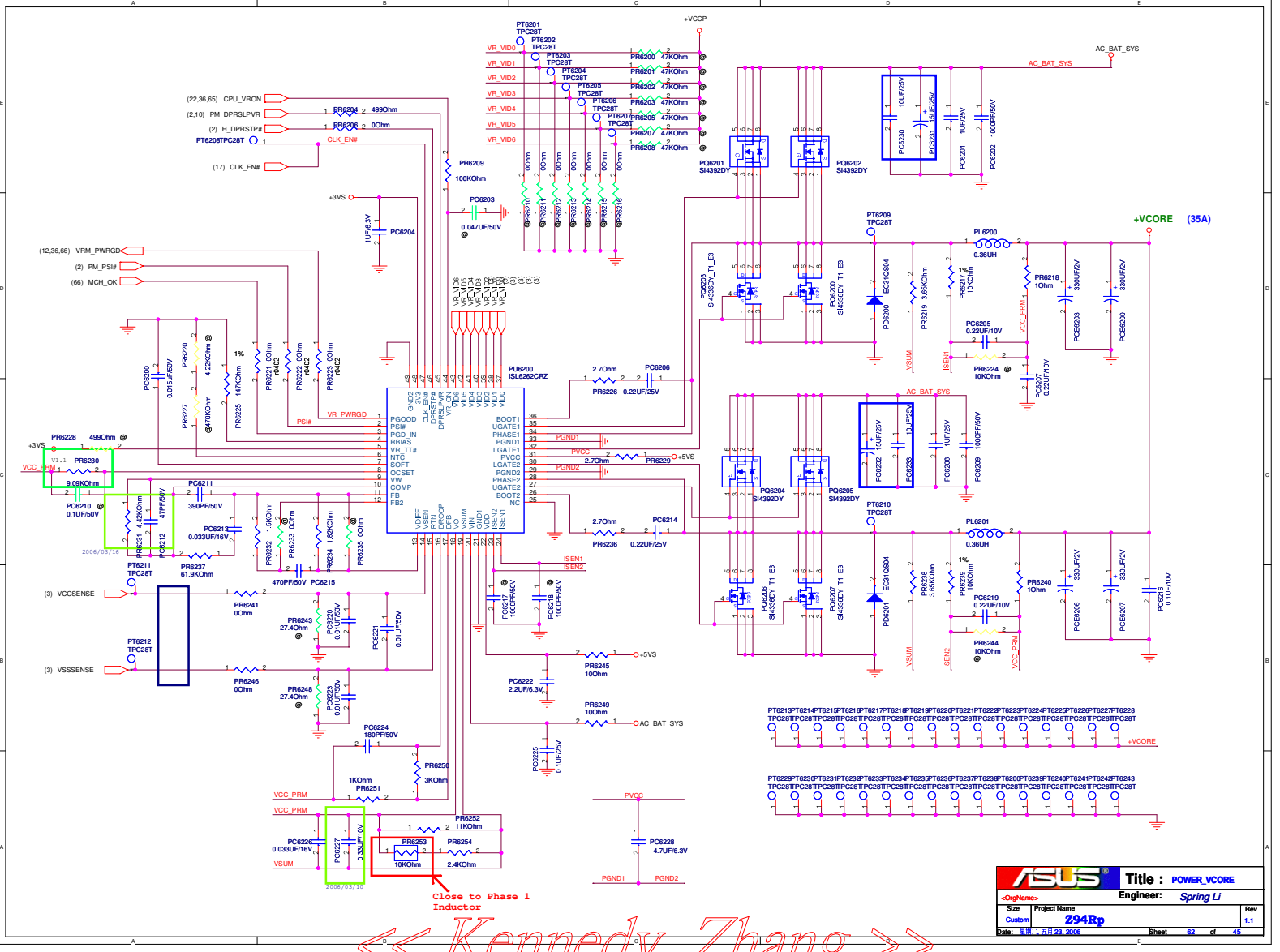

<< Kennedy_Zhang >>

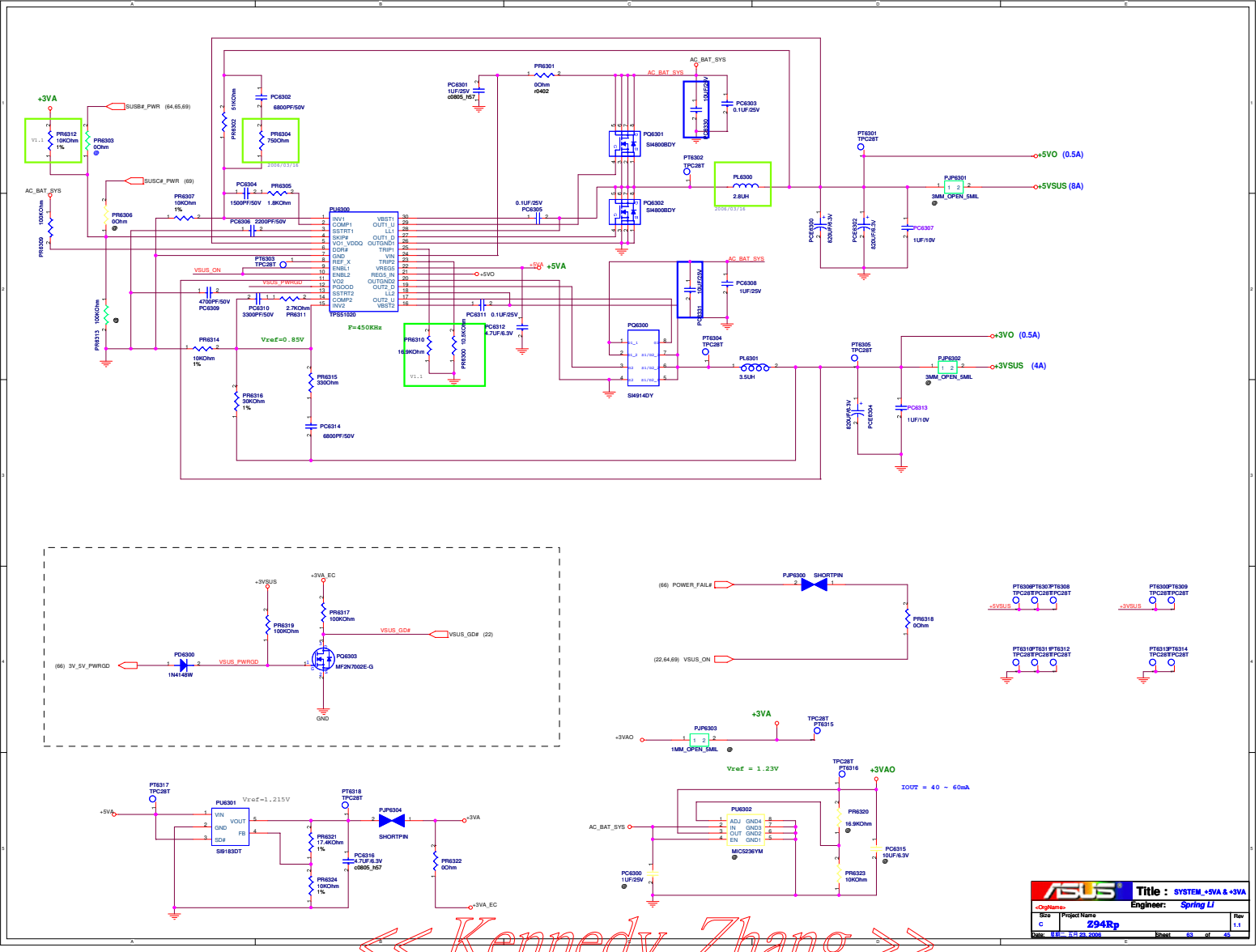

<< Kennedy_Zhang >>

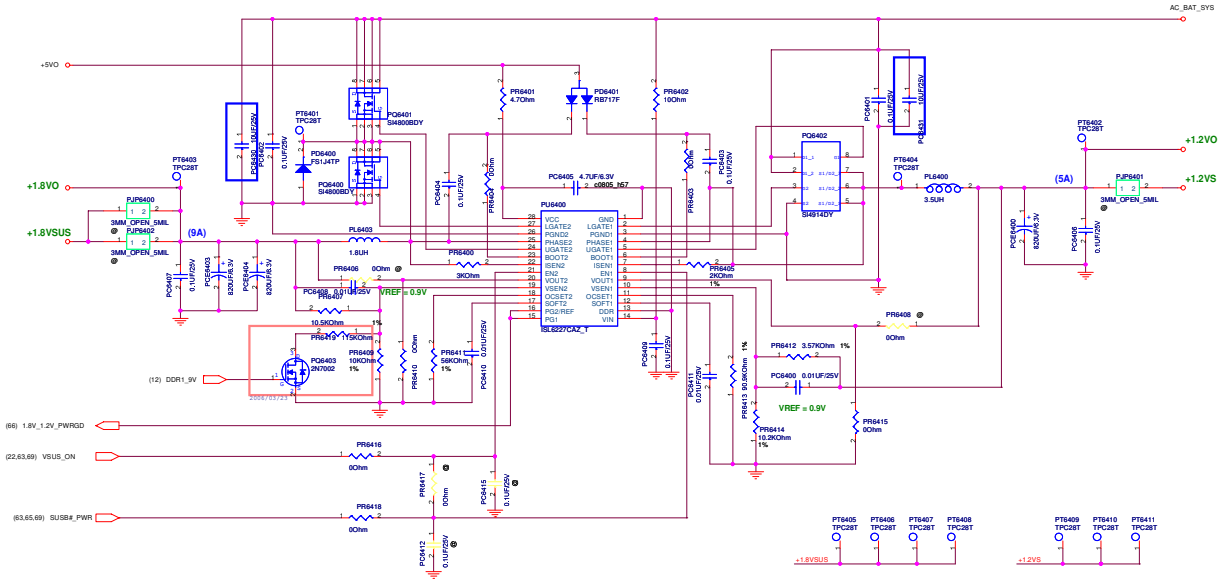

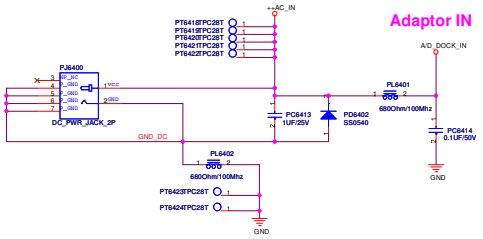

Title : 1.8V&1.2VS		
<OrgName>	Engineer: Spring Li	
Size: C	Project Name: Z94Rp	Rev: 1.1
Date: 三 三月 23, 2006	Sheet 44 of 45	

<< Kennedy_Zhang >>

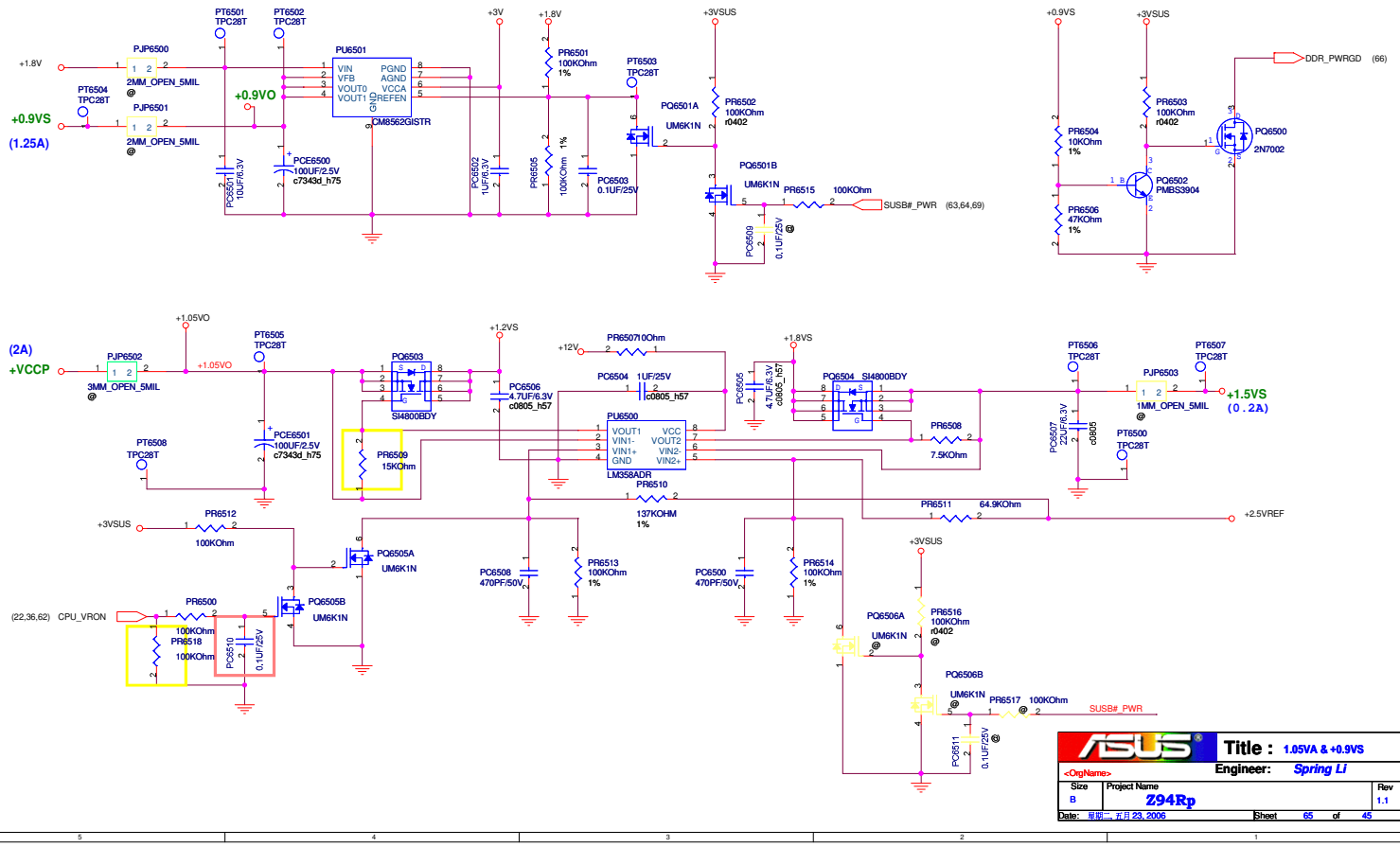

ASUS	Title : 1.05VA & +0.9VS	
<OrgName>	Engineer: Spring Li	
Size B	Project Name Z94Rp	Rev 1.1
Date: 星期二, 五月 23, 2006	Sheet 65 of 45	

<< Kennedy_Zhang >>

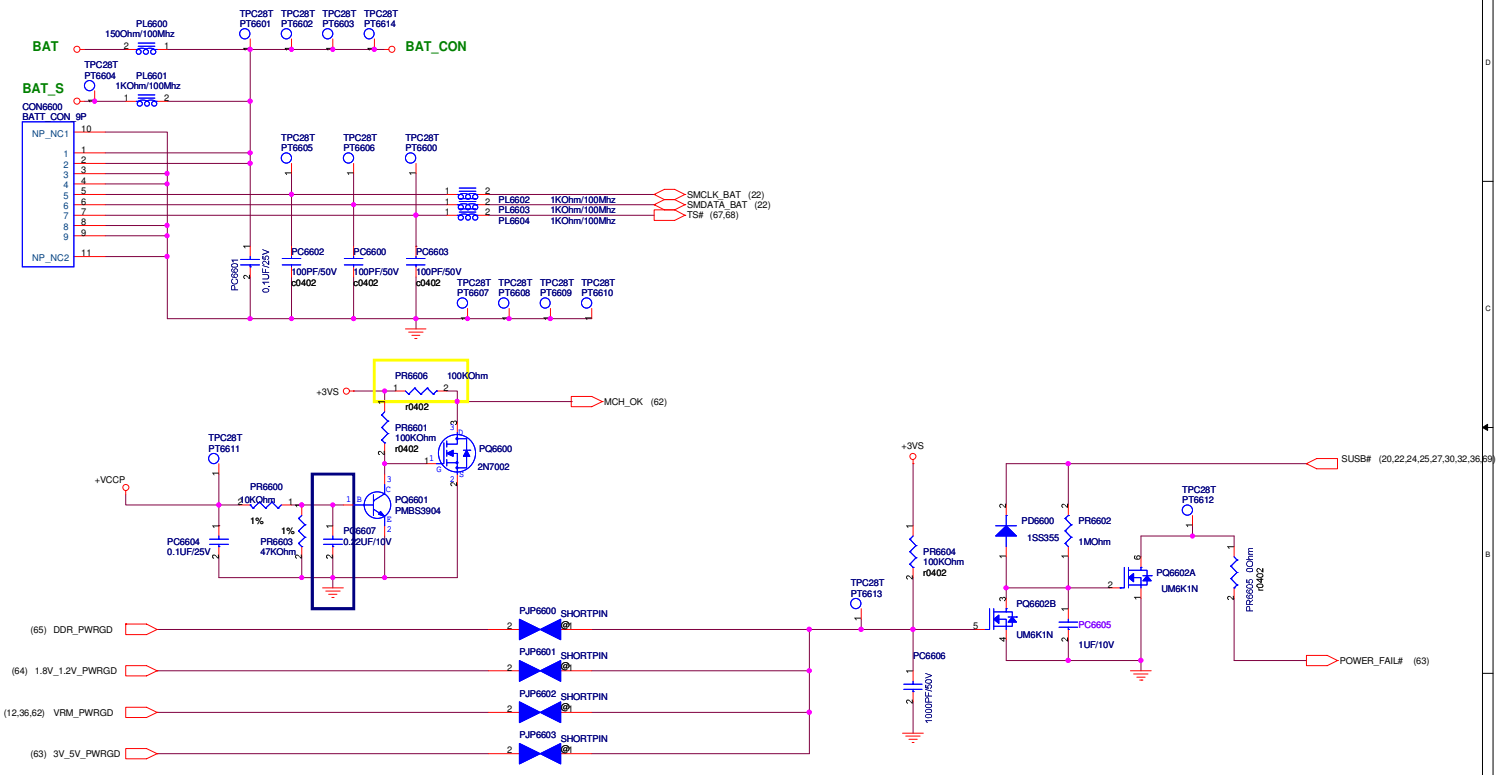

ASUS	Title : BAT CON/PWOK		
<OrgName>	Engineer: Spring Li		
Size B	Project Name Z94Rp		Rev 1.1
Date: 星期 , 五月 23, 2006	Sheet 66 of 45		

<< Kennedy_Zhang >>

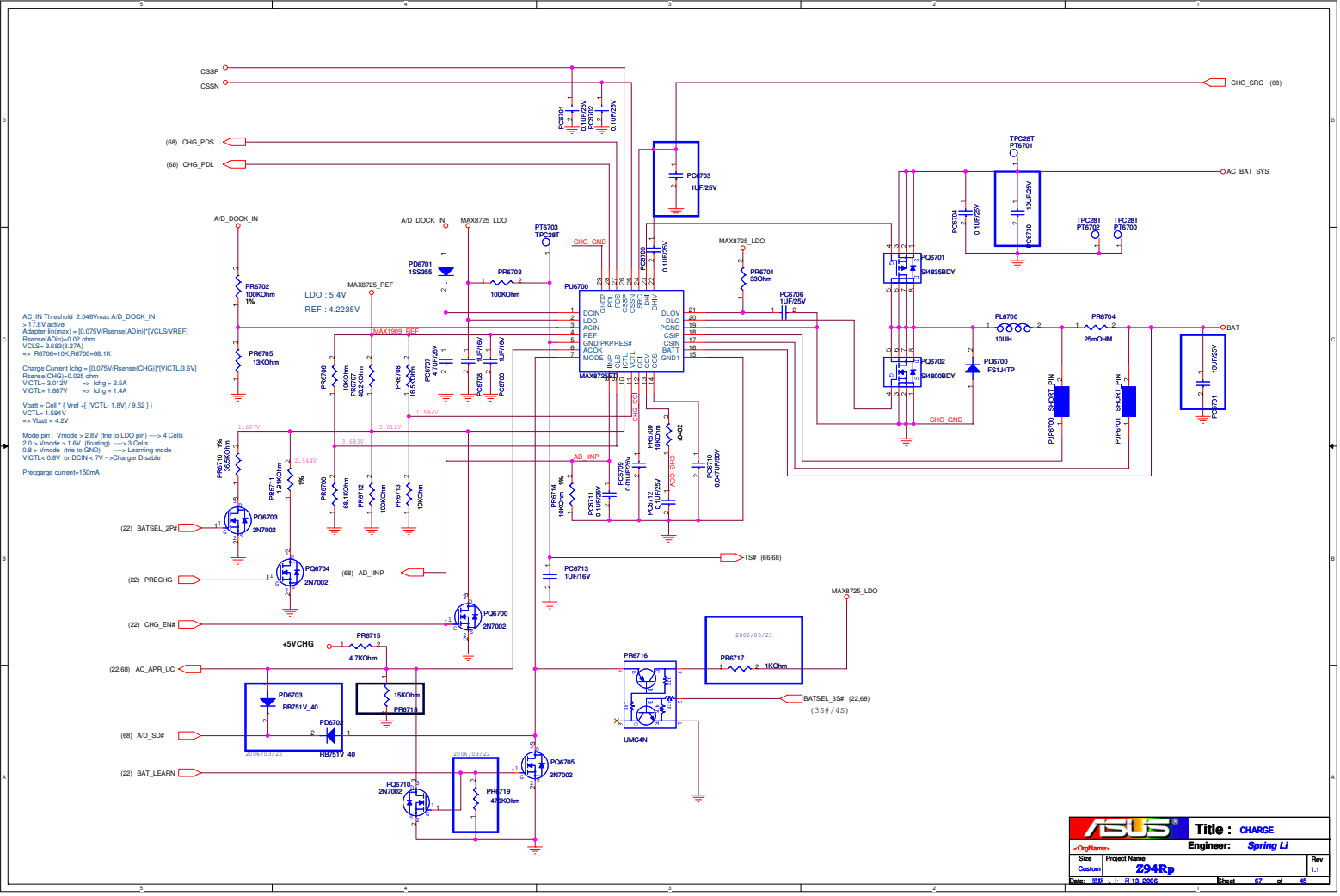

<< Kennedy_Zhang >>

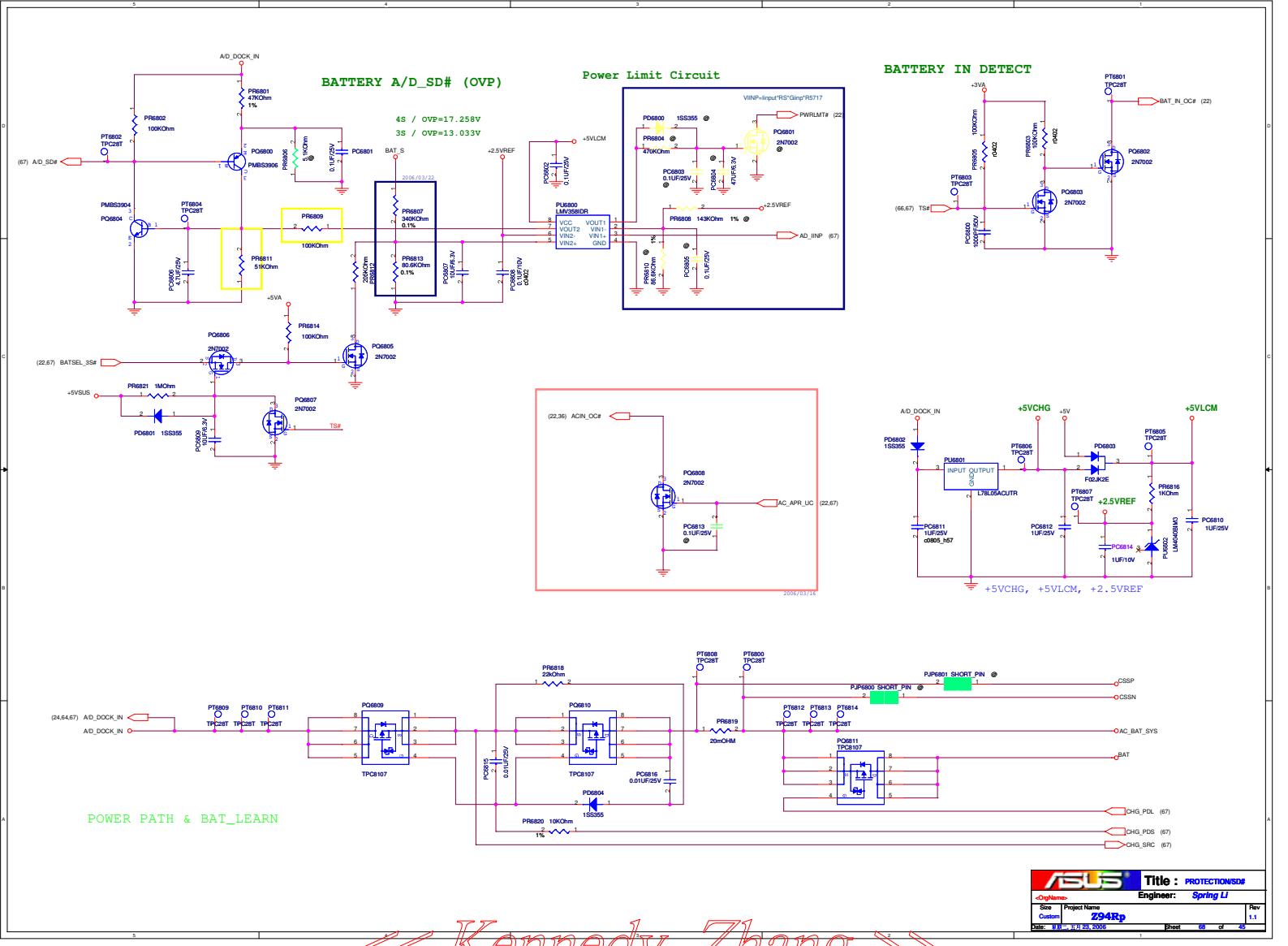

ASUS	Title : PROTECTION/SD#		
<OrgName>	Engineer: Spring Li		
Size: Custom	Project Name: Z94Rp		Rev: 1.1
Date: 星期一, 五月 23, 2006	Sheet 68 of 45		

<< Kennedy_Zhang >>

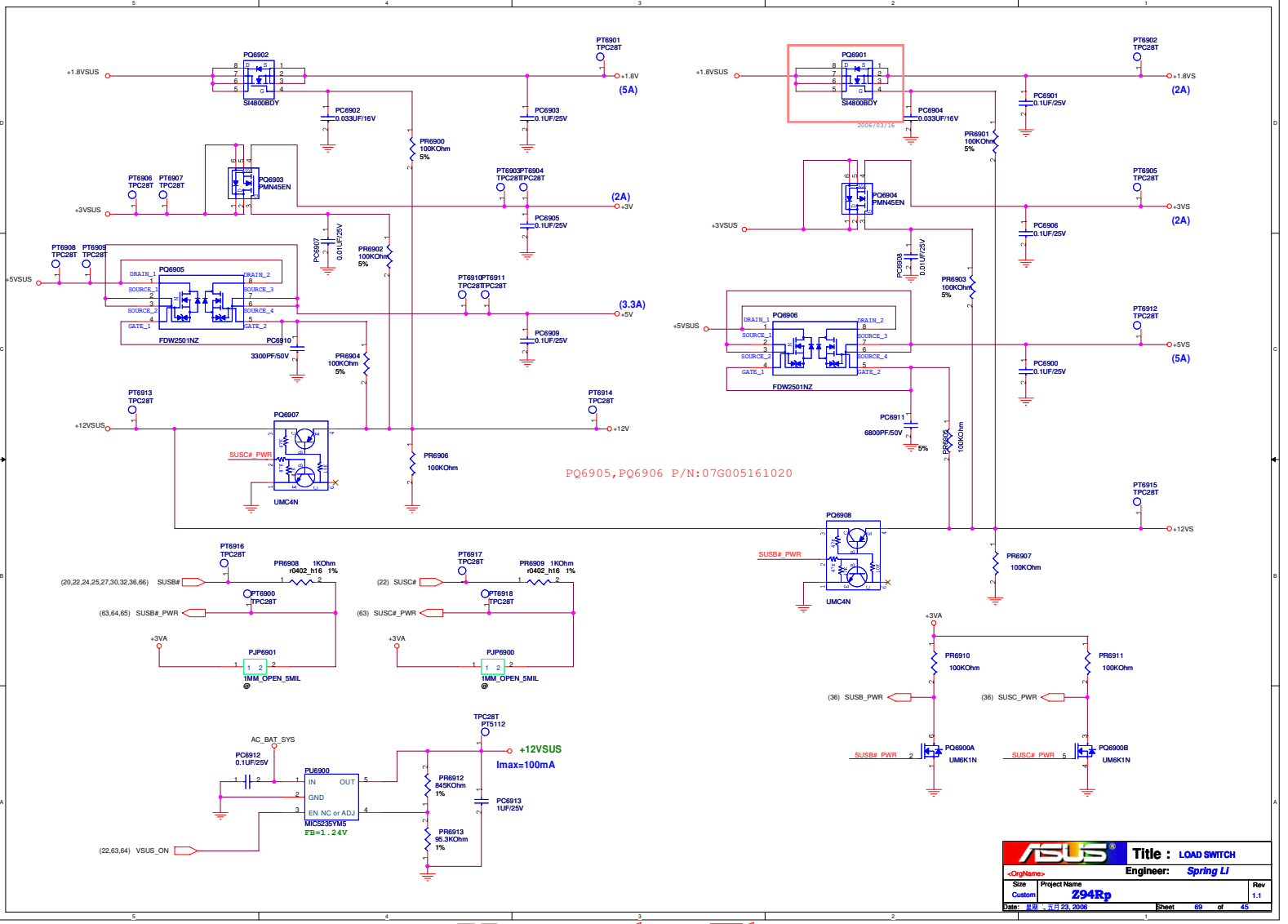

<< Kennedy_Zhang >>

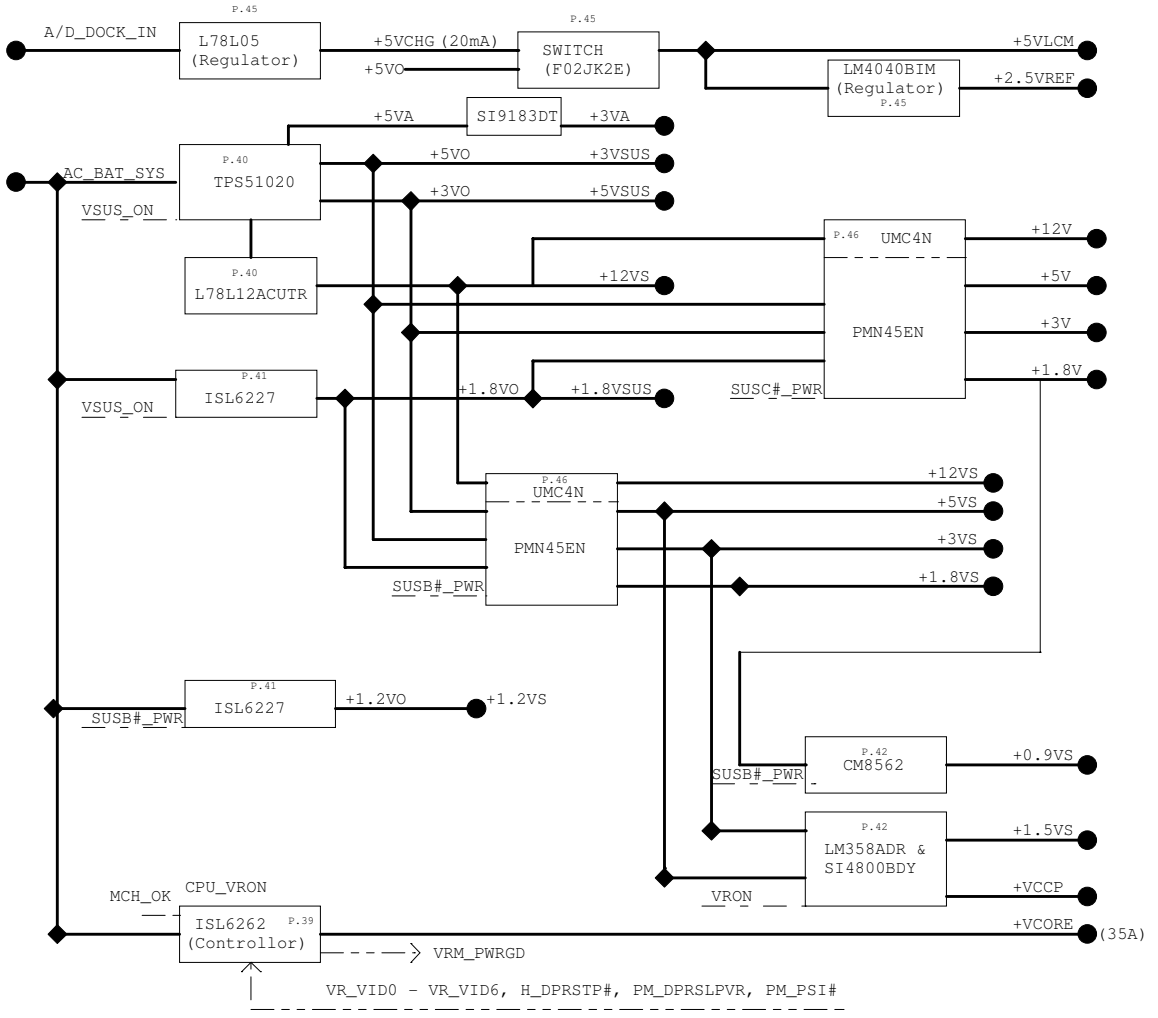

ASUS

Title : POWER BLOCK DIAGRAM

<OrgName> Engineer: Spring Li

Size	Project Name	Rev
Custom	Z94Rp	1.1

Date: 星期 二, 四月 04, 2006 Sheet 70 of 45

<< Kennedy_Zhang >>