01_Block Diagram
02_System Setting
03_Power Sequence
04_History
07_CLOCK GEN-ICS9LPR600
08_CLOCK BUFFER-ICS9P935
09_CPU-YONAH(HOST)
10_CPU-YONAH(PWR)
11_NB-M662MX(HOST)
12_NB-M662MX(MuTIOL&VGA)
13_NB-M662MX(PCIE)
14_NB-M662MX(DDR2)
15_NB-M662MX(PWR)
16_NB-M662MX(GND)
17_SB-966L(PCI-IDE-MuTIOL)
18_SB-966L(PCIE-AZALIA-MII)
19_SB-966L(USB-SATA)
20_SB-966L(PWR-GND)
21_SB-966L(OTHER)
22_DDR2 SO-DIMM0
23_DDR2 SO-DIMM1
24_DDR2 TERMINATION
25_SiS 307LV(OpenLDI&TV)
26_CRT
27_LVDS & INVERTER CONNECTOR
28_TV OUT CONN
29_HDD & ODD
30_MINICARD
31_NEWCARD
32_ESATA
33_CARD1394-R5C832(1)
34_CARD1394-R5C832(2)
35_4 in 1 CARD READER
36_LAN-RTL8110SBL
37_MDC&RJ45&RJ11
38_CODEC-ALC660
39_AUDIO AMP & JCAK
40_USB CONN
41_BT
42_TPM
43_Debug CONN.
44_EC-IT8510E
45_Touch Pad & KB
46_ISA ROM
47_SWITCH
48_LED
49_THER SENSOR & FAN
50_DC & BAT IN
51_DISCHARGE
52_SREW HOLE
53_EMI
54_POWER_FLOWCHART
55_POWER_CHARGER
56_POWER_VCORE
57_POWER_SYSTEM
58_POWER_1.5V&1.8VSB&VCCP&1.9V
59_POWER_VTT_DDR&5VLCM&PG_DT&3VA
60_POWER_LOAD SWITCH

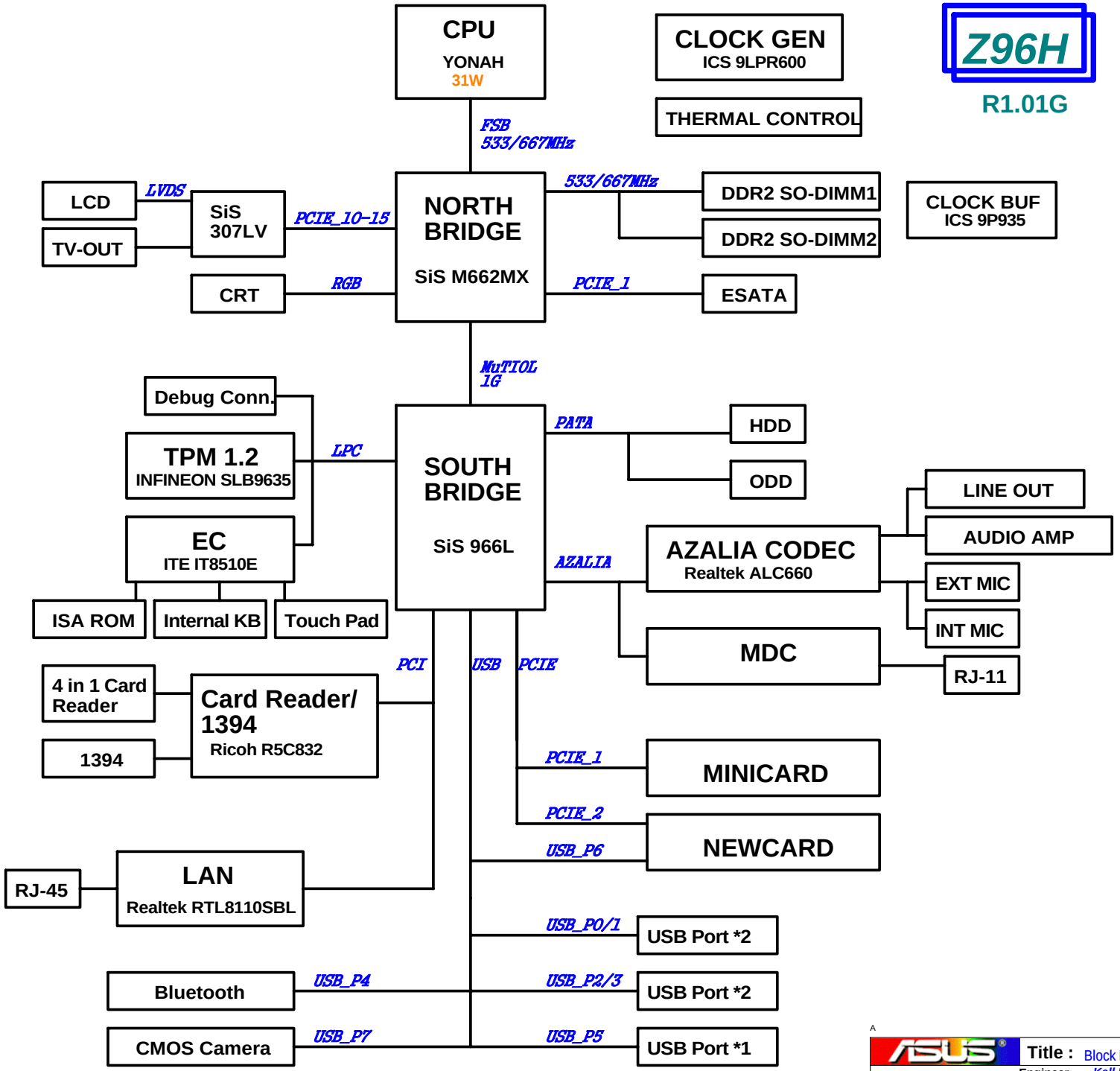

ASUS	Title : Block Diagram	
ASUSTek Computer INC.	Engineer: Kell Huang	
Size: Custom	Project Name: Z96H	Rev: 1.00G
Date: Wednesday, May 17, 2006	Sheet 1 of 60	

EC GPIO SETTING

Pin	Pin Name	Signal Name	Type	Z96J Default	EC Default
32	PWM0/GPA0	/			GPI
33	PWM1/GPA1	FAN_PWM	O	H	GPI
36	PWM2/GPA2	CLK_PWRSAVE#	O	H	GPI
37	PWM3/GPA3	/	I		GPI
38	PWM4/GPA4	CHG_LED_UP#	O	H	GPI
39	PWM5/GPA5	PWR_LED_UP#	O	H	GPI
40	PWM6/GPA6	/	O		GPI
43	PWM7/GPA7	LCD_BACKOFF#	O	H	GPI
153	RXD/GPB0	NUM_LED	O	L	GPI
154	TXD/GPB1	CAP_LED	O	L	GPI
162	GPB2	SCRL_LED	O	L	GPI
163	SMCLK0/GPB3	SMB0_CLK	SMCLK0		GPI
164	SMDAT0GPB4	SMB0_DAT	SMDAT0		GPI
5	GA20/GPB5	A20GATE	GA20		GPO
6	KBRST#/GPB6	RC_IN#	KBRST#		KBRST#
165	GPB7	/	I		GPI
47	CLKOUT/GPC0	/	O		GPI
169	SMCLK1/GPC1	SMB1_CLK	SMCLK1		GPI
170	SMDAT1/GPC2	SMB1_DAT	SMDAT1		GPI
171	GPC3	MAIL_LED	O	L	GPI
172	TMRI0/WUI2/GPC4	AC_OK#	I		GPI
175	GPC5	OP_SD#	O	H	GPI
176	TMRI1/WUI3/GPC6	BAT_IN_OC#	I	H	GPI
1	CK32KOUT/GPC7	/			GPI
26	RI1#/WUI0/GPD0	SUSB#	I		GPI
29	RI2#/WUI1/GPD1	SUSC#	I		GPI
30	LPCRST#/WUI4//GPD2	PLT_RST#	LPCRST		LPCRST
31	ECSCI#/GPD3	EXT_SCI#	ECSCI#	H	GPI
41	GPD4	RF_ON_SW#	O	H	GPI
42	GINT/GPD5	/			GPI
62	TACH0/GPD6	FAN0_TACH	TACH0		GPI
63	TACH1/GPD7	/			GPI
87	ADC4/GPE0	DISTP_SW#	I		GPI
88	ADC5/GPE1	/			GPI
89	ADC6/GPE2	EMAIL_SW#	I		GPI
90	ADC7/GPE3	EXPLORE_SW#	I		GPI
2	PWRSW/GPE4	PWR_SW#	PWRSW		GPI
44	WUI5/GPE5	/			GPI
24	LPCPD#/WUI6/GPE6	LID_EC#	I		GPI
25	CLKRUN#/WUI7/GPE7	/			GPI
110	PS2CLK0/GPF0	/			GPI
111	PS2DAT0/GPF1	/			GPI
114	PS2CLK1/GPF2	/			GPI
115	PS2DAT1/GPF3	/			GPI
116	PS2CLK2/GPF4	TP_CLK	PS2CLK2		GPI
117	PS2DAT2/GPF5	TP_DAT	PS2DAT2		GPI
118	PS2CLK3/GPF6	/			GPI
119	PS2DAT3/GPF7	INTERNET#	I		GPI
113	FA16/GPG0	FA16	FA16		GPI
112	FA17/GPG1	FA17	FA17		GPI
104	FA18/GPG2	FA18	FA18		GPI
103	FA19/GPG3	/			GPI
3	FA20/GPG4	THRM_CPU#	I	H	GPI
4	FA21/GPG5	/			GPI
27	LPC80HL/GPG6	PMTHERM#	O	H	GPI
28	LPC80LL/GPG7	AC_APR_UC#	I	H	GPI

06/01/23

Pin	Pin Name	Signal Name	Type	Default	
48	GPH0	VSUS_ON	O	L	GPI
54	GPH1	VSUS_GD#	I	H	GPI
55	GPH2	CPUPWR_GD#	I	H	GPI
69	GPH3	PM_PWRBTN#	O	H	GPI
70	GPH4	SUSC_ON	O	L	GPI
75	GPH5	SUSB_ON	O	L	GPI
76	GPH6	CPU_VRON	O	L	GPI
105	GPH7	PM_RSMRST#	O	L	GPI
148	GPI0	ICH7_PWROK	O	L	GPI
149	GPI1	/	O		GPI
152	GPI2	MCHOK	I	L	GPI
155	GPI3	CHG_EN#	O	H	GPI
156	GPI4	PRECHG	O	L	GPI
168	GPI5	BAT_LL#	O	H	GPI
174	GPI6	BAT_LEARN	O	L	GPI
93	ADC8	KID0	I		
94	ADC9	KID1	I		
101	DAC2	BL_PWM_DA	O		
102	DAC3	BATSEL_2P#	O		

ICH7-M GPIO SETTING

Pin	Pin Name	Signal Name	Type	Power_Well	Default
AB18	GPIO00/BM_BUSY#	PM_BMBUSY#	I	Core(To:3.3V)	GPI
C8	GPIO01/REQ5#	PCI_REQ#5	I/O	Core(To:5V)	GPI
G8	GPIO02/PIRQE#	PCI_INTE#	I(OD)	Core(To:5V)	GPI
F7	GPIO03/PIRQF#	PCI_INTF#	I(OD)	Core(To:5V)	GPI
F8	GPIO04/PIRQG#	PCI_INTG#	I(OD)	Core(To:5V)	GPI
G7	GPIO05/PIRQH#	PCI_INTH#	I(OD)	Core(To:5V)	GPI
AC21	GPIO06	NC	I/O	Core(To:3.3V)	GPI
AC18	GPIO07	WLAN_BT_LED_EN#	I	Core(To:3.3V)	GPI
E21	GPIO08	EXTSMI#	I	SUS(To:3.3V)	GPI
E20	GPIO09	SATA_DET#0	I/O	SUS(To:3.3V)	GPI
A20	GPIO10	WLAN_ON#	O	SUS(To:3.3V)	GPI
B23	SMBALERT#/GPIO11	SMB_ALERT#	I/O	SUS(To:3.3V)	Native
F19	GPIO12	KBC_SCI#	I	SUS(To:3.3V)	GPI
E19	GPIO13	TP	I/O	SUS(To:3.3V)	GPI
R4	GPIO14	NC	I/O	SUS(To:3.3V)	GPI
E22	GPIO15	CB_SD#	I/O	SUS(To:3.3V)	GPI
AC22	GPIO16/DPRSLPVR	PM_DPRSLPVR	O	Core(To:3.3V)	Native
D8	GPIO17/GNT5#	PCI_GNT#5	I/O	Core(To:3.3V)	GPO
AC20	GPIO18/STP_PCI#	STP_PCI#	O	Core(To:3.3V)	GPO
AH18	GPIO19/SATA1GP	NC	O	Core(To:3.3V)	GPI
AF21	GPIO20/STP_CPU#	STP_CPU#	O	Core(To:3.3V)	GPO
AE19	GPIO21/SATA0GP	NC	I/O	Core(To:3.3V)	GPI
A13	GPIO22/REQ4#	PCI_REQ#4	I/O	Core(To:3.3V)	Native
AA5	LDRQ1#/GPIO23	TP	I/O	Core(To:3.3V)	Native
R3	GPIO24	NC	I/O	SUS(To:3.3V)	GPO
D20	GPIO25	NC	I/O	SUS(To:3.3V)	GPO
A21	GPIO26/EL_RSVD	NC	I/O	SUS(To:3.3V)	GPO
B21	GPIO27/EL_STATE0	PD_DET#	I/O	SUS(To:3.3V)	GPO
E23	GPIO28/EL_STATE1	NC	I/O	SUS(To:3.3V)	GPO
C3	GPIO29/OC#5	USB_OC#5	I/O	SUS(To:3.3V)	Native
A2	GPIO30/OC#6	NEWCARD_OC#	I	SUS(To:3.3V)	Native
B3	GPIO31/OC#7	USB_OC#7	I/O	SUS(To:3.3V)	Native
AG18	GPIO32/CLKRUN#	PM_CLKRUN#	O	Core(To:3.3V)	GPO
AC19	GPIO33/AZ_DOCK_EN#	BT_ON#	O	Core(To:3.3V)	GPO
U2	GPIO34/AZ_DOCK_RST#	NC	I/O	Core(To:3.3V)	GPO
AD21	GPIO35	NC	I/O	Core(To:3.3V)	GPO
AH19	GPIO36/SATA2GP	NC	I/O	Core(To:3.3V)	GPI
AE19	GPIO37/SATA3GP	PCB_ID0	I	Core(To:3.3V)	GPI
AD20	GPIO38	PCB_ID1	I	Core(To:3.3V)	GPI
AE20	GPIO39	PCB_ID2	I	Core(To:3.3V)	GPI
A14	GNT4#/GPIO48	PCI_GNT#4	I/O	Core(To:3.3V)	Native
AG24	GPIO49/CPUPWRGD	H_PWRGD	O	V_CPU_IO	Native

SM-Bus Device	SM-Bus Address
Clock Generator	1101001x (D2)
SO-DIMM 0	1010000x (A0)
SO-DIMM 1	1010001x (A2)
Thermal Sensor	01001100 (4C)

PCI Device	IDSEL#	REQ/GNT#	Interrupts
CARD READER	AD24	0	C
1394	AD24	0	B
LAN	AD23	1	D

ASUS	Title : System Setting	
ASUSTek Computer INC.	Engineer: Kell Huang	
Size: Custom	Project Name: Z96H	Rev: 1.00G
Date: Wednesday, May 17, 2006	Sheet 2 of 60	

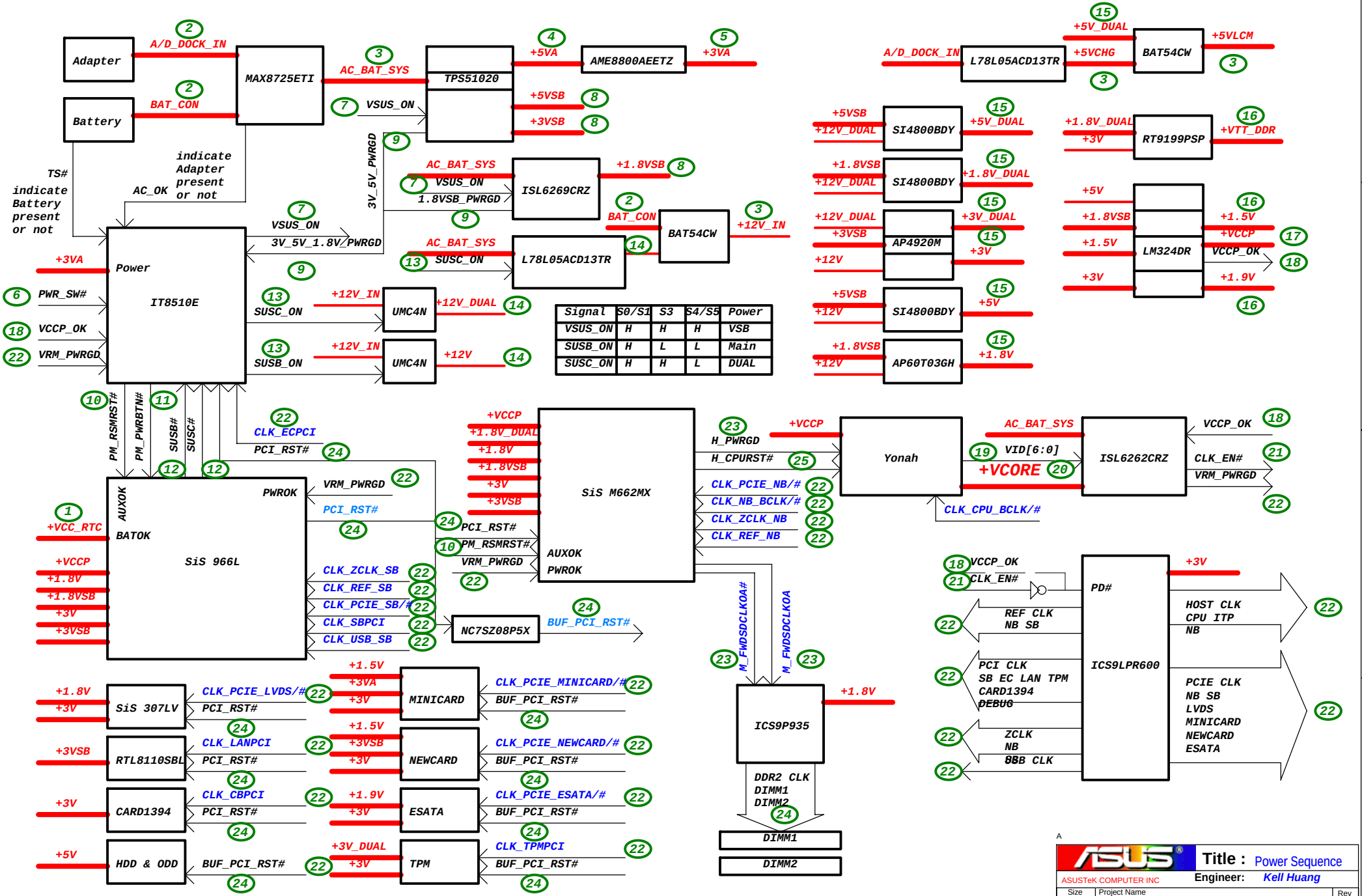

Signal	S0/S1	S3	S4/S5	Power
VSUS_ON	H	H	H	VSB
SUSB_ON	H	L	L	Main
SUSC_ON	H	H	L	DUAL

ASUSTeK COMPUTER INC

Title : Power Sequence

Engineer: Kell Huang

Size	Project Name	Rev
A3	Z96H	1.00G

Date: Wednesday, May 17, 2006 Sheet 3 of 60

CIRCUIT UPDATED HISTORY

Rev	Date	Description
1.00G	2006/03/06	Z96H Schematic 1.00G (base on Z96F), NB: SiS M662MX SB: SiS 966L

Rev	Date	Description

ASUSTeK COMPUTER INC	Title : History	
	Engineer: *Kell Huang*	
Size: Custom	Project Name: Z96H	Rev: 1.00G
Date: Wednesday, May 17, 2006	Sheet 4 of 60	

ASUSTeK COMPUTER INC	Title : Blank		
	Engineer: *Kell Huang*		
Size A3	Project Name Z96H		Rev 1.00G
Date: Wednesday, May 17, 2006		Sheet 5 of 60	

Title : Blank			
ASUSTeK COMPUTER INC	Engineer: Kell Huang		
Size A3	Project Name Z96H		Rev 1.00G
Date: Wednesday, May 17, 2006		Sheet 6 of 60	

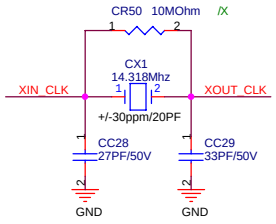

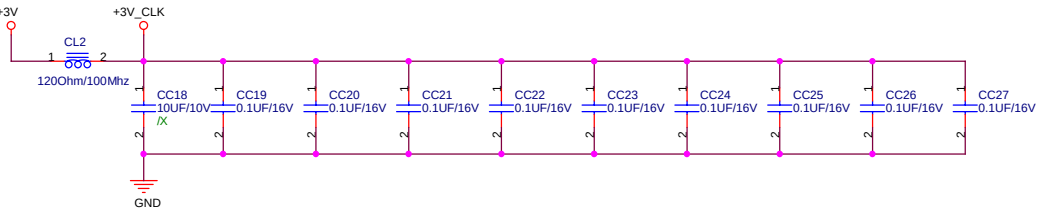

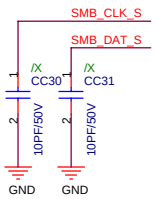

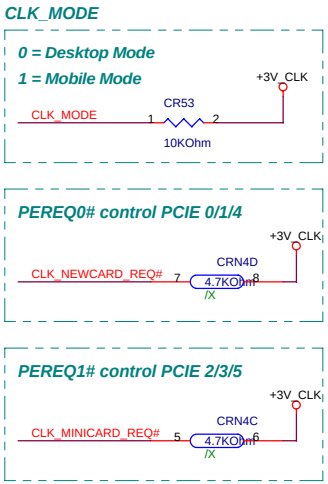

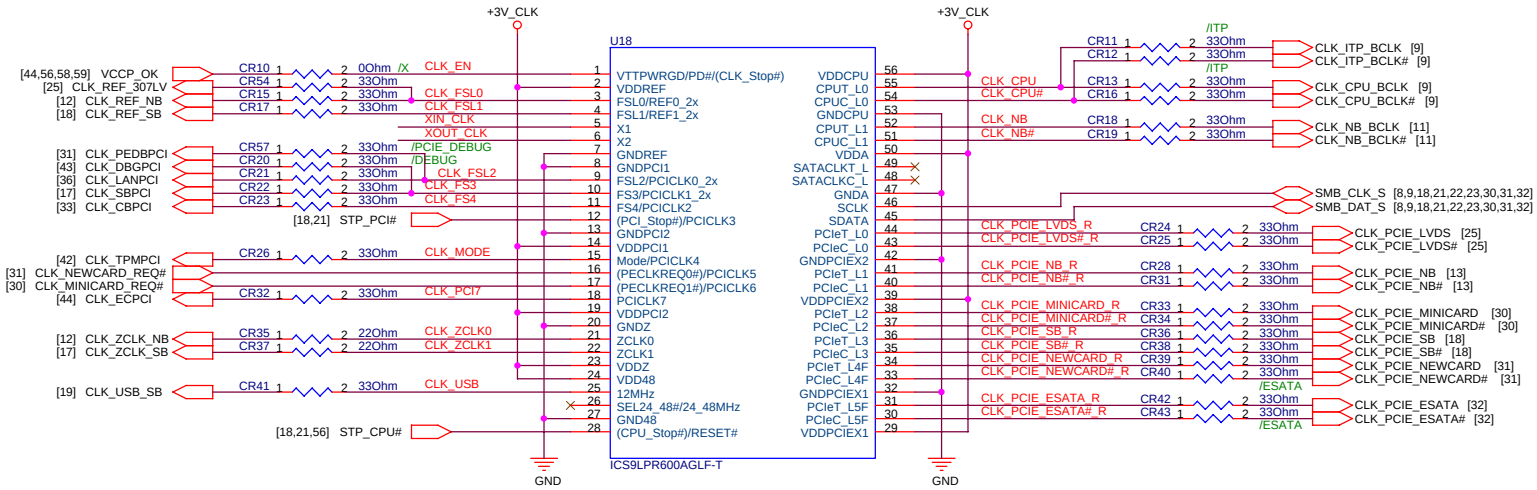

FS4	FS3	FSL2	FSL1	FSL0	CPU	PCI	ZCLK	PCIE	SATA
0	1	0	0	1	133	33	133	100	100
0	1	0	1	1	166	33	133	100	100

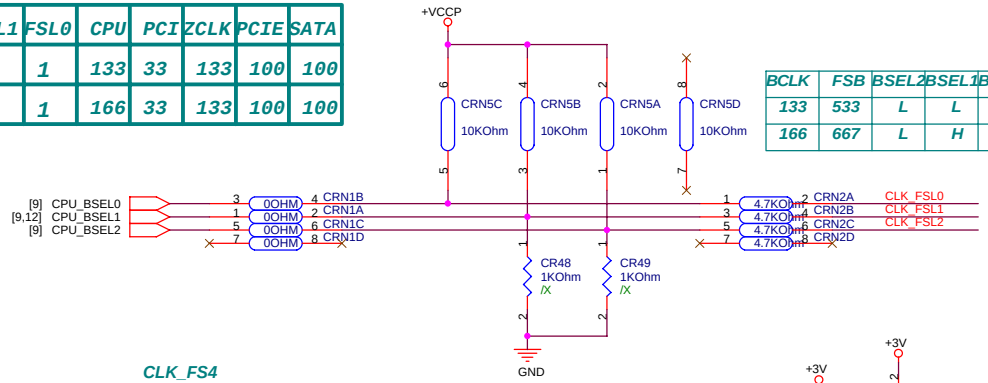

BCLK	FSB	BSEL2	BSEL1	BSEL0
133	533	L	L	H
166	667	L	H	H

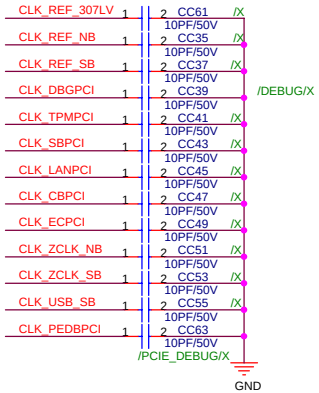

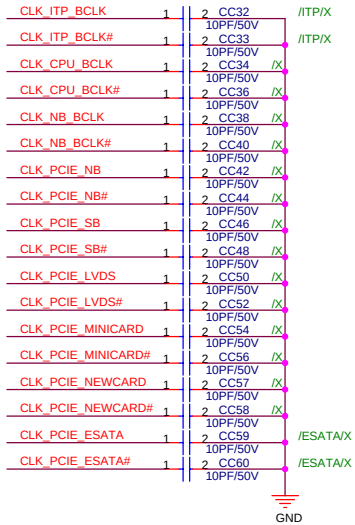

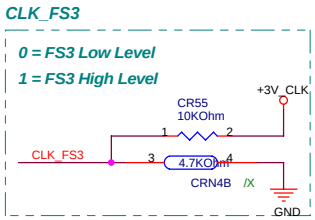

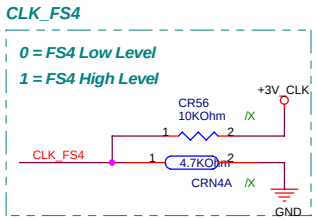

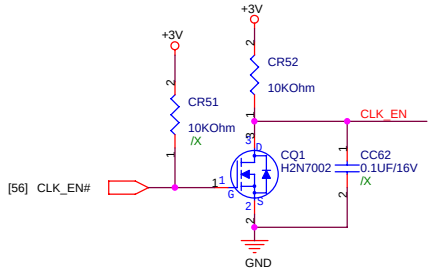

A

ASUSTeK COMPUTER INC.

Title : CLOCK GEN-ICS9LPR600

Engineer: Kell Huang

Size	Project Name	Rev
A3	Z96H	1.00G

Date: Wednesday, May 17, 2006 Sheet 7 of 60

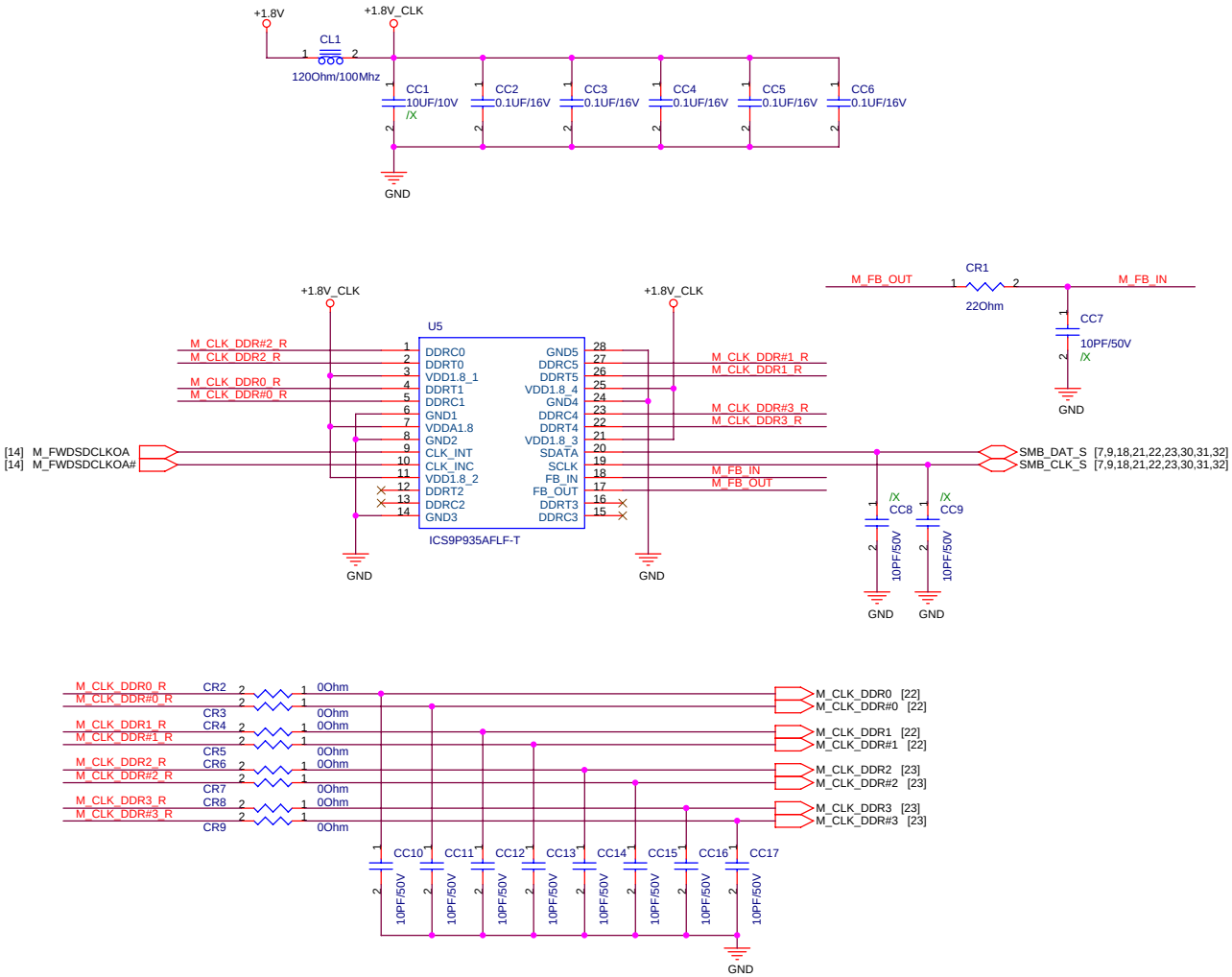

A

ASUSTeK COMPUTER INC.	Title : CLOCK BUF-ICS9P935	
	Engineer: Kell Huang	
Size A3	Project Name Z96H	Rev 1.00G
Date: Wednesday, May 17, 2006	Sheet 8 of 60	

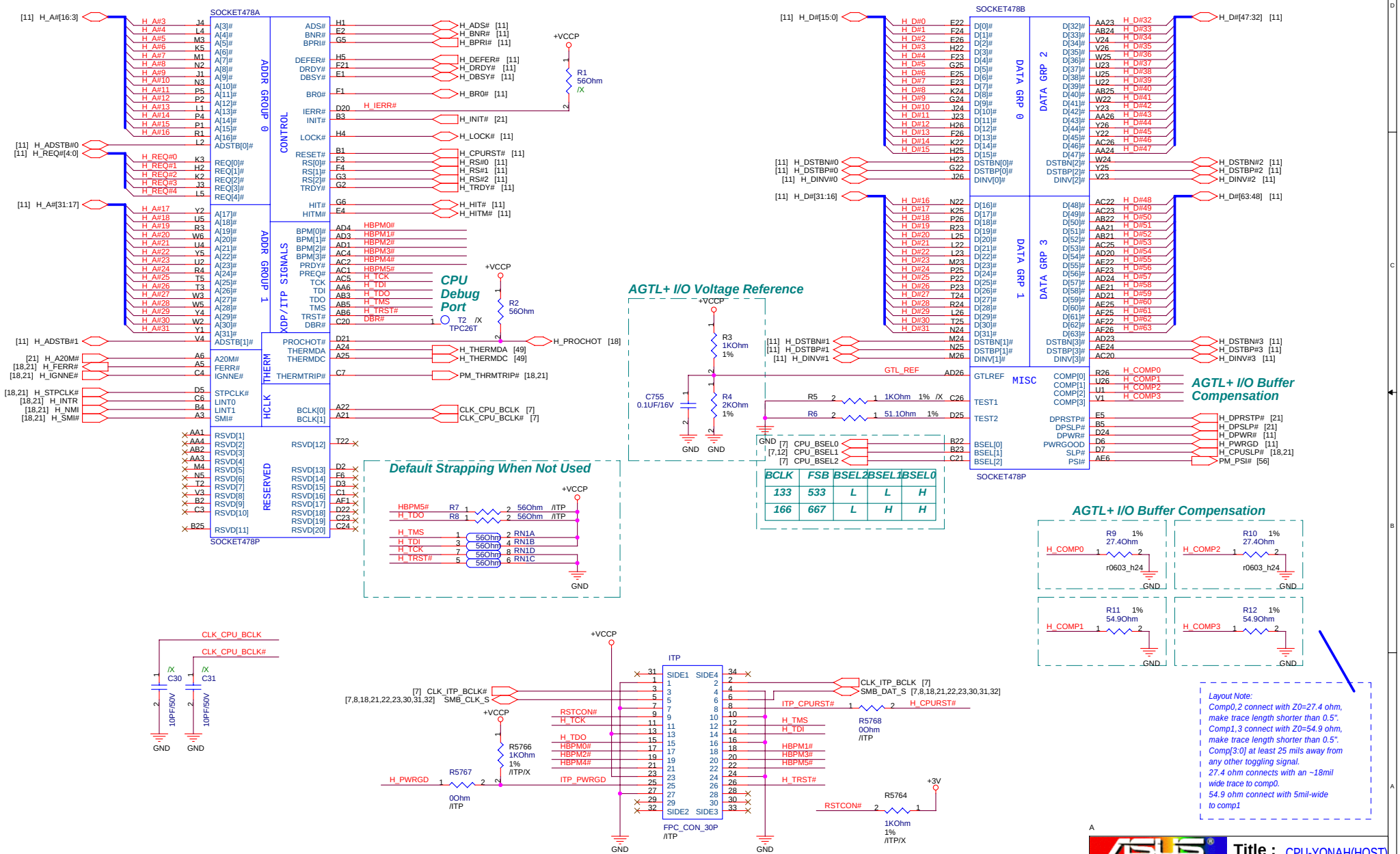

BCLK	FSB	BSEL2	BSEL1	BSEL0
133	533	L	L	H
166	667	L	H	H

Layout Note:
Comp0,2 connect with Z0=27.4 ohm, make trace length shorter than 0.5".
Comp1,3 connect with Z0=54.9 ohm, make trace length shorter than 0.5".
Comp[3:0] at least 25 mils away from any other toggling signal.
27.4 ohm connects with an ~18mil wide trace to comp0.
54.9 ohm connect with 5mil-wide to comp1

ASUSTeK COMPUTER INC.	Title : CPU-YONAH(HOST)		
	Engineer: Kell Huang		
Size: Custom	Project Name: Z96H		Rev: 1.00G
Date: Wednesday, May 17, 2006	Sheet 9 of 60		

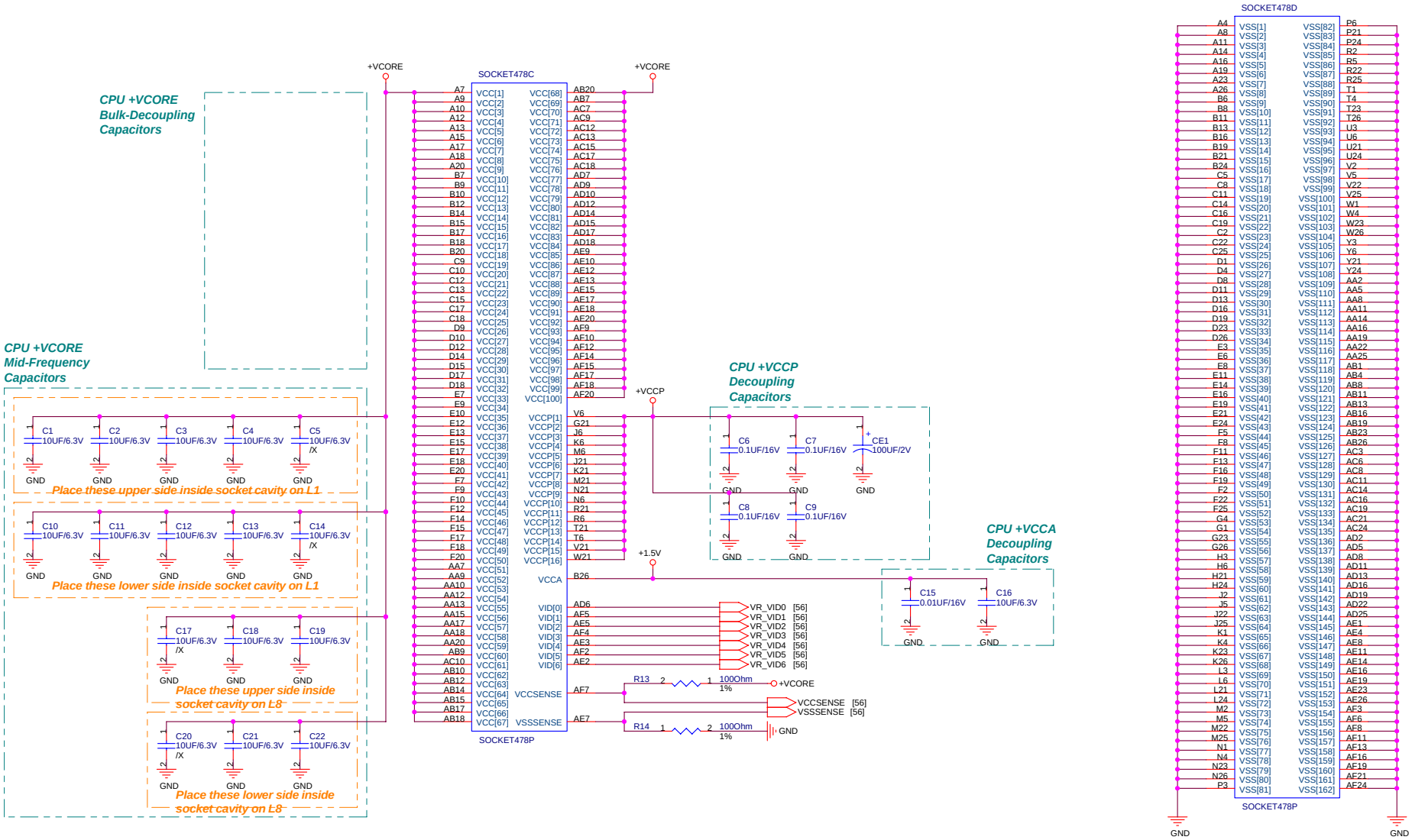

+VCORE Mid-Frequency Capacitor
*Intel: 22UF *32*
*R1F: 10UF *16*
+VCCP Decoupling Capacitor
*Intel: 270UF *1, 0.1UF *6*
*R1F: 220UF *1, 0.1UF *4*

A

ASUS

Title : CPU_YONAH(PWR)

ASUSTeK COMPUTER INC. NB1 **Engineer:** *Kell Huang*

Size	Project Name	Rev
Custom	Z96H	1.00G

Date: Wednesday, May 17, 2006 Sheet 10 of 60

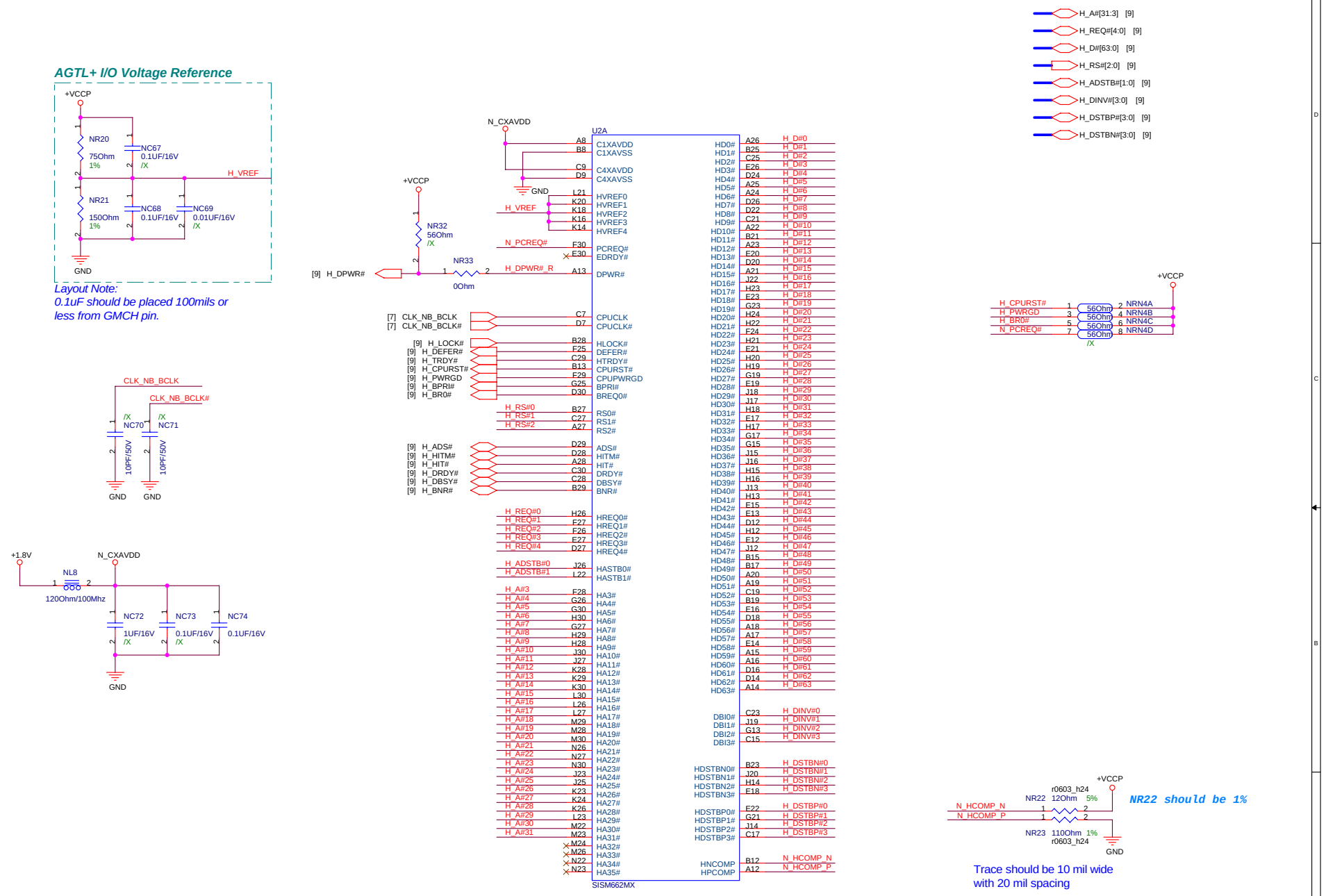
AGTL+ I/O Voltage Reference
+VCCP
NR20
75Ohm
1%
NC67
0.1UF/16V
/X
H_VREF
NR21
150Ohm
1%
NC68
0.1UF/16V
NC69
0.01UF/16V
/X
GND
Layout Note:
0.1uF should be placed 100mils or
less from GMCH pin.
CLK_NB_BCLK
CLK_NB_BCLK#
/X
NC70
NC71
10PF/50V
GND
+1.8V
N_CXAVDD
NL8
120Ohm/100Mhz
NC72
1UF/16V
NC73
0.1UF/16V
NC74
0.1UF/16V
N_CXAVDD
+VCCP
NR32
56Ohm
/X
NR33
0Ohm
[9] H_DPWR#
H_DPWR#_R
N_PCREQ#
H_VREF
[7] CLK_NB_BCLK
[7] CLK_NB_BCLK#
[9] H_LOCK#
[9] H_DEFER#
[9] H_TRDY#
[9] H_CPURST#
[9] H_PWRGD
[9] H_BPRI#
[9] H_BR0#
H_RS#0
H_RS#1
H_RS#2
[9] H_ADS#
[9] H_HITM#
[9] H_HIT#
[9] H_DRDY#
[9] H_DBSY#
[9] H_BNR#
H_REQ#0
H_REQ#1
H_REQ#2
H_REQ#3
H_REQ#4
H_ADSTB#0
H_ADSTB#1
H_A#3
H_A#4
H_A#5
H_A#6
H_A#7
H_A#8
H_A#9
H_A#10
H_A#11
H_A#12
H_A#13
H_A#14
H_A#15
H_A#16
H_A#17
H_A#18
H_A#19
H_A#20
H_A#21
H_A#22
H_A#23
H_A#24
H_A#25
H_A#26
H_A#27
H_A#28
H_A#29
H_A#30
H_A#31
U2A
C1XAVDD
C1XAVSS
C4XAVDD
C4XAVSS
HVREF0
HVREF1
HVREF2
HVREF3
HVREF4
PCREQ#
EDRDY#
DPWR#
CPUCLK
CPUCLK#
HLOCK#
DEFER#
HTRDY#
CPURST#
CPUPWRGD
BPRI#
BREQ0#
RS0#
RS1#
RS2#
ADS#
HITM#
HIT#
DRDY#
DBSY#
BNR#
HREQ0#
HREQ1#
HREQ2#
HREQ3#
HREQ4#
HASTB0#
HASTB1#
HA3#
HA4#
HA5#
HA6#
HA7#
HA8#
HA9#
HA10#
HA11#
HA12#
HA13#
HA14#
HA15#
HA16#
HA17#
HA18#
HA19#
HA20#
HA21#
HA22#
HA23#
HA24#
HA25#
HA26#
HA27#
HA28#
HA29#
HA30#
HA31#
HA32#
HA33#
HA34#
HA35#
HD0#
HD1#
HD2#
HD3#
HD4#
HD5#
HD6#
HD7#
HD8#
HD9#
HD10#
HD11#
HD12#
HD13#
HD14#
HD15#
HD16#
HD17#
HD18#
HD19#
HD20#
HD21#
HD22#
HD23#
HD24#
HD25#
HD26#
HD27#
HD28#
HD29#
HD30#
HD31#
HD32#
HD33#
HD34#
HD35#
HD36#
HD37#
HD38#
HD39#
HD40#
HD41#
HD42#
HD43#
HD44#
HD45#
HD46#
HD47#
HD48#
HD49#
HD50#
HD51#
HD52#
HD53#
HD54#
HD55#
HD56#
HD57#
HD58#
HD59#
HD60#
HD61#
HD62#
HD63#
DBI0#
DBI1#
DBI2#
DBI3#
HDSTBN0#
HDSTBN1#
HDSTBN2#
HDSTBN3#
HDSTBP0#
HDSTBP1#
HDSTBP2#
HDSTBP3#
HNCOMP
HPCOMP
SISM662MX
H_D#0
H_D#1
H_D#2
H_D#3
H_D#4
H_D#5
H_D#6
H_D#7
H_D#8
H_D#9
H_D#10
H_D#11
H_D#12
H_D#13
H_D#14
H_D#15
H_D#16
H_D#17
H_D#18
H_D#19
H_D#20
H_D#21
H_D#22
H_D#23
H_D#24
H_D#25
H_D#26
H_D#27
H_D#28
H_D#29
H_D#30
H_D#31
H_D#32
H_D#33
H_D#34
H_D#35
H_D#36
H_D#37
H_D#38
H_D#39
H_D#40
H_D#41
H_D#42
H_D#43
H_D#44
H_D#45
H_D#46
H_D#47
H_D#48
H_D#49
H_D#50
H_D#51
H_D#52
H_D#53
H_D#54
H_D#55
H_D#56
H_D#57
H_D#58
H_D#59
H_D#60
H_D#61
H_D#62
H_D#63
H_DINV#0
H_DINV#1
H_DINV#2
H_DINV#3
H_DSTBN#0
H_DSTBN#1
H_DSTBN#2
H_DSTBN#3
H_DSTBP#0
H_DSTBP#1
H_DSTBP#2
H_DSTBP#3
N_HCOMP_N
N_HCOMP_P
H_A#[31:3] [9]
H_REQ#[4:0] [9]
H_D#[63:0] [9]
H_RS#[2:0] [9]
H_ADSTB#[1:0] [9]
H_DINV#[3:0] [9]
H_DSTBP#[3:0] [9]
H_DSTBN#[3:0] [9]
+VCCP
H_CPURST#
H_PWRGD
H_BR0#
N_PCREQ#
56Ohm
/X
NRN4A
NRN4B
NRN4C
NRN4D
+VCCP
r0603_h24
NR22 12Ohm 5%
N_HCOMP_N
N_HCOMP_P
NR22 should be 1%
NR23 110Ohm 1%
r0603_h24
GND
Trace should be 10 mil wide
with 20 mil spacing
Title : NB-M662MX(HOST)
ASUSTeK COMPUTER INC.
Engineer: Kell Huang
Size Custom
Project Name Z96H
Rev 1.00G
Date: Wednesday, May 17, 2006
Sheet 11 of 60

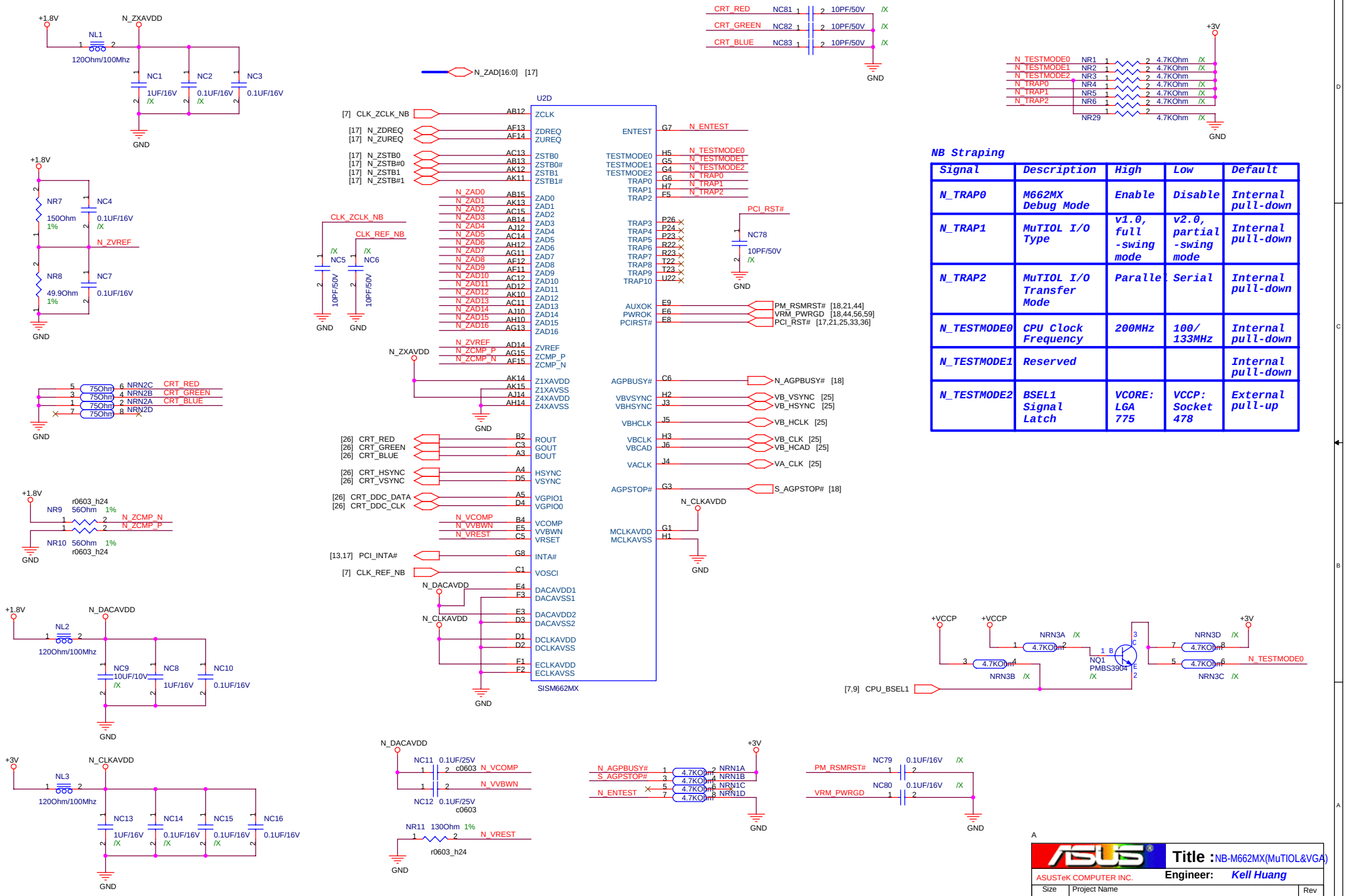

NB Straping

Signal	Description	High	Low	Default
N_TRAP0	M662MX Debug Mode	Enable	Disable	Internal pull-down
N_TRAP1	MuTIOL I/O Type	v1.0, full -swing mode	v2.0, partial -swing mode	Internal pull-down
N_TRAP2	MuTIOL I/O Transfer Mode	Parallel	Serial	Internal pull-down
N_TESTMODE0	CPU Clock Frequency	200MHz	100/ 133MHz	Internal pull-down
N_TESTMODE1	Reserved			Internal pull-down
N_TESTMODE2	BSEL1 Signal Latch	VCORE: LGA 775	VCCP: Socket 478	External pull-up

ASUSTeK COMPUTER INC.

Title : NB-M662MX(MuTIOL&VGA)

Engineer: Kell Huang

Size	Project Name	Rev
A3	Z96H	1.00G

Date: Wednesday, May 17, 2006 Sheet 12 of 60

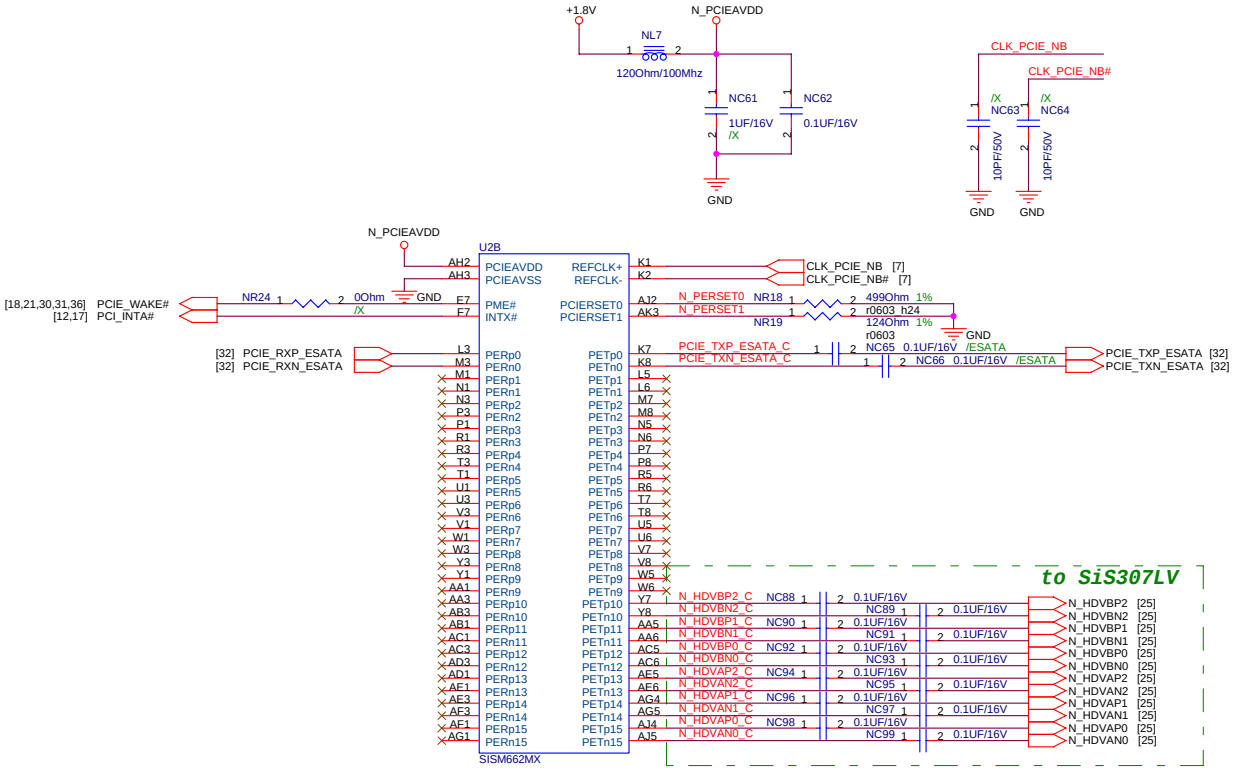

ASUSTeK COMPUTER INC.	Title : NB-M662MX(PCIE)	Engineer: Kell Huang
Size: Custom	Project Name: Z96H	Rev: 1.00G
Date: Wednesday, May 17, 2006	Sheet 13 of 60	

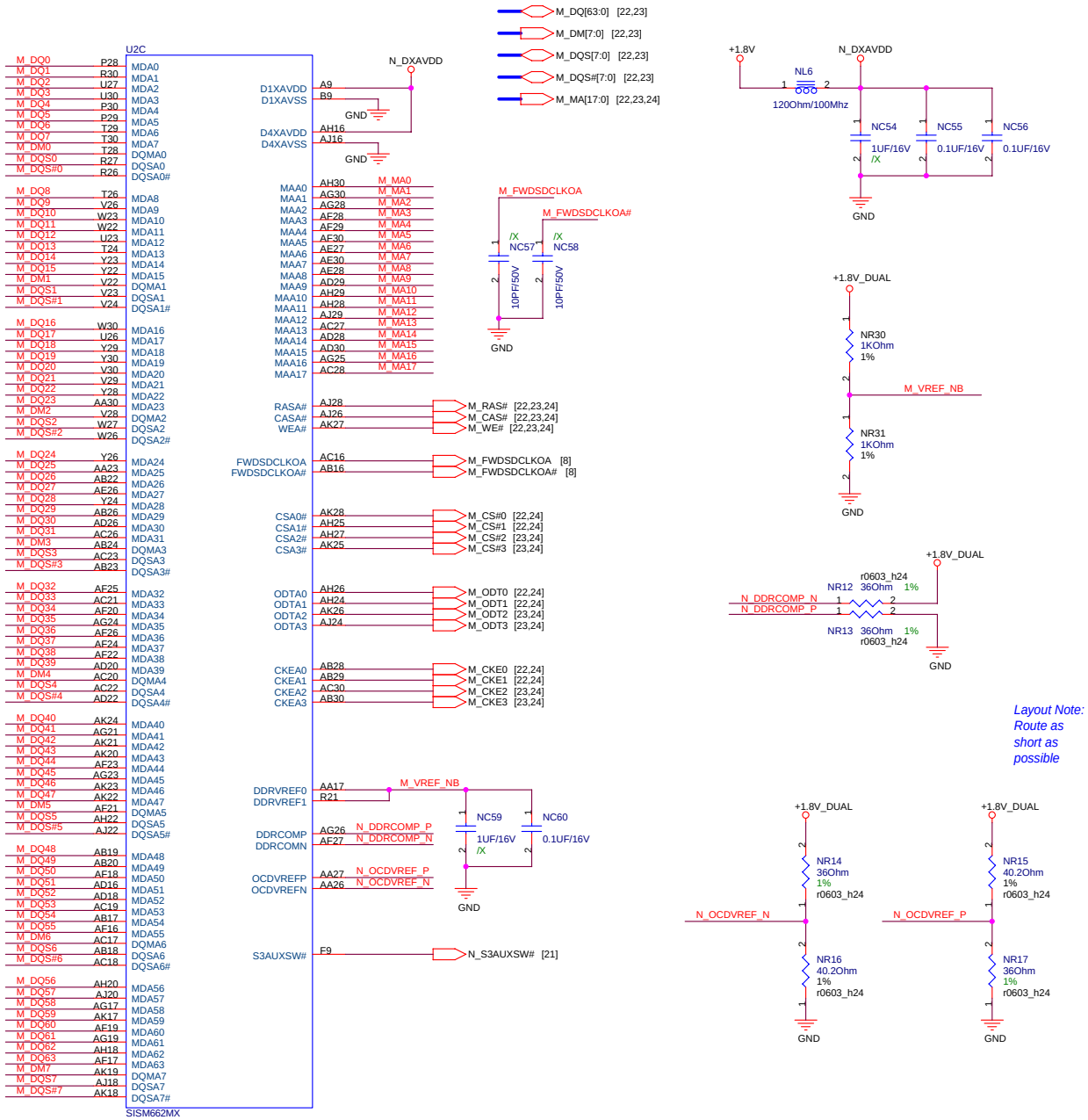

ASUS	Title : NB-M662MX(DDR2)		
ASUSTeK COMPUTER INC.	Engineer: Kell Huang		
Size: Custom	Project Name: Z96H		Rev: 1.00G
Date: Wednesday, May 17, 2006	Sheet 14 of 60		

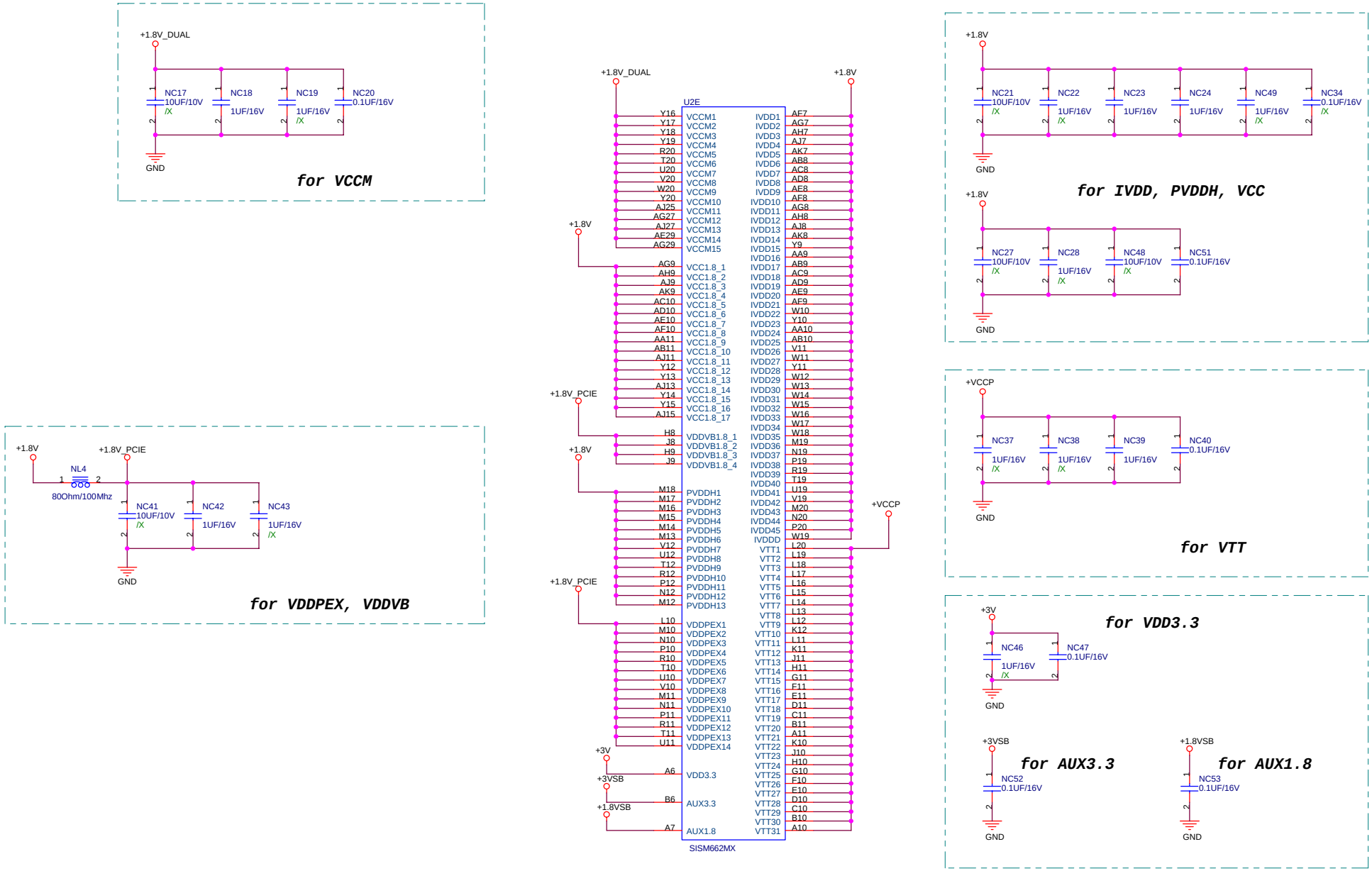

ASUSTeK COMPUTER INC.	Title : NB-M662MX(PWR)		
	Engineer: Kell Huang		
Size A3	Project Name Z96H		Rev 1.00G
Date: Wednesday, May 17, 2006	Sheet 15 of 60		

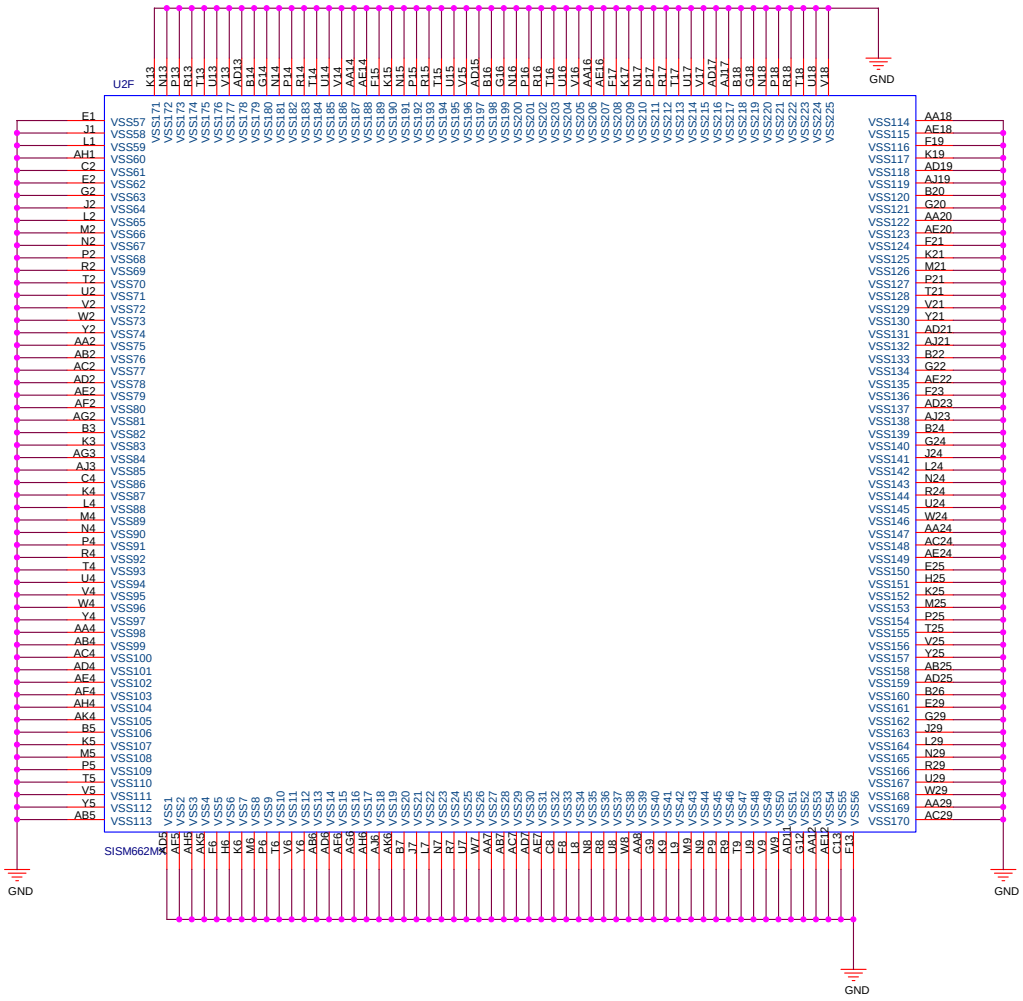

ASUSTeK COMPUTER INC.	Title : NB-M662MX(GND)		
	Engineer: Kell Huang		
Size: Custom	Project Name: Z96H		Rev: 1.00G
Date: Wednesday, May 17, 2006	Sheet 16 of 60		

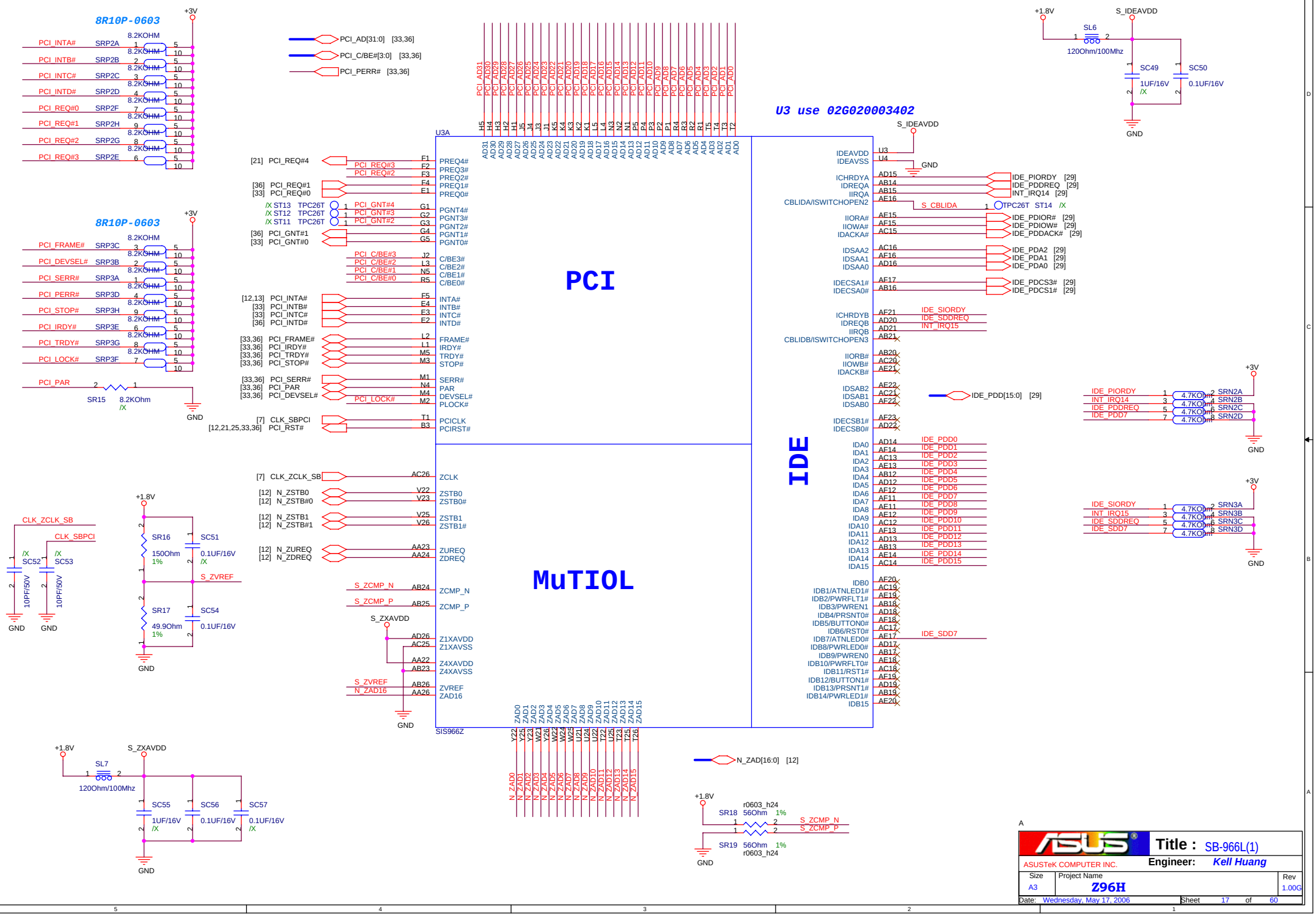
8R10P-0603
PCI_INTA# SRP2A
PCI_INTB# SRP2B
PCI_INTC# SRP2C
PCI_INTD# SRP2D
PCI_REQ#0 SRP2F
PCI_REQ#1 SRP2H
PCI_REQ#2 SRP2G
PCI_REQ#3 SRP2E
8.2KOHM
+3V
PCI_AD[31:0] [33,36]
PCI_C/BE#[3:0] [33,36]
PCI_PERR# [33,36]
U3 use 02G020003402
U3A
PCI
PCI_FRAME# SRP3C
PCI_DEVSEL# SRP3B
PCI_SERR# SRP3A
PCI_PERR# SRP3D
PCI_STOP# SRP3H
PCI_IRDY# SRP3E
PCI_TRDY# SRP3G
PCI_LOCK# SRP3F
PCI_PAR
SR15 8.2KOhm
/X
GND
[21] PCI_REQ#4
PCI_REQ#3
PCI_REQ#2
[36] PCI_REQ#1
[33] PCI_REQ#0
/X ST13 TPC26T
/X ST12 TPC26T
/X ST11 TPC26T
PCI_GNT#4
PCI_GNT#3
PCI_GNT#2
[36] PCI_GNT#1
[33] PCI_GNT#0
PCI_C/BE#3
PCI_C/BE#2
PCI_C/BE#1
PCI_C/BE#0
[12,13] PCI_INTA#
[33] PCI_INTB#
[33] PCI_INTC#
[36] PCI_INTD#
[33,36] PCI_FRAME#
[33,36] PCI_IRDY#
[33,36] PCI_TRDY#
[33,36] PCI_STOP#
[33,36] PCI_SERR#
[33,36] PCI_PAR
[33,36] PCI_DEVSEL#
PCI_LOCK#
[7] CLK_SBPCI
[12,21,25,33,36] PCI_RST#
PREQ4#
PREQ3#
PREQ2#
PREQ1#
PREQ0#
PGNT4#
PGNT3#
PGNT2#
PGNT1#
PGNT0#
C/BE3#
C/BE2#
C/BE1#
C/BE0#
INTA#
INTB#
INTC#
INTD#
FRAME#
IRDY#
TRDY#
STOP#
SERR#
PAR
DEVSEL#
PLOCK#
PCICLK
PCIRST#
MuTIOL
[7] CLK_ZCLK_SB
[12] N_ZSTB0
[12] N_ZSTB#0
[12] N_ZSTB1
[12] N_ZSTB#1
[12] N_ZUREQ
[12] N_ZDREQ
ZCLK
ZSTB0
ZSTB0#
ZSTB1
ZSTB1#
ZUREQ
ZDREQ
S_ZCMP_N
S_ZCMP_P
ZCMP_N
ZCMP_P
S_ZXAVDD
Z1XAVDD
Z1XAVSS
Z4XAVDD
Z4XAVSS
S_ZVREF
N_ZAD16
ZVREF
ZAD16
SIS966Z
CLK_ZCLK_SB
CLK_SBPCI
/X SC52
/X SC53
10PF/50V
GND
+1.8V
SR16 150Ohm 1%
SR17 49.9Ohm 1%
SC51 0.1UF/16V /X
SC54 0.1UF/16V
S_ZVREF
SL7 120Ohm/100Mhz
SC55 1UF/16V /X
SC56 0.1UF/16V
SC57 0.1UF/16V /X
N_ZAD[16:0] [12]
SR18 56Ohm 1% r0603_h24
SR19 56Ohm 1% r0603_h24
S_ZCMP_N
S_ZCMP_P
IDE
S_IDEAVDD
IDEAVDD
IDEAVSS
ICHRDYA
IDREQA
IIRQA
CBLIDA/ISWITCHOPEN2
IIORA#
IIOWA#
IDACKA#
IDSAA2
IDSAA1
IDSAA0
IDECSA1#
IDECSA0#
ICHRDYB
IDREQB
IIRQB
CBLIDB/ISWITCHOPEN3
IIORB#
IIOWB#
IDACKB#
IDSAB2
IDSAB1
IDSAB0
IDECSB1#
IDECSB0#
IDA0
IDA1
IDA2
IDA3
IDA4
IDA5
IDA6
IDA7
IDA8
IDA9
IDA10
IDA11
IDA12
IDA13
IDA14
IDA15
IDB0
IDB1/ATNLED1#
IDB2/PWRFLT1#
IDB3/PWREN1
IDB4/PRSNT0#
IDB5/BUTTON0#
IDB6/RST0#
IDB7/ATNLED0#
IDB8/PWRLED0#
IDB9/PWREN0
IDB10/PWRFLT0#
IDB11/RST1#
IDB12/BUTTON1#
IDB13/PRSNT1#
IDB14/PWRLED1#
IDB15
IDE_PIORDY [29]
IDE_PDDREQ [29]
INT_IRQ14 [29]
S_CBLIDA
TPC26T ST14 /X
IDE_PDIOR# [29]
IDE_PDIOW# [29]
IDE_PDDACK# [29]
IDE_PDA2 [29]
IDE_PDA1 [29]
IDE_PDA0 [29]
IDE_PDCS3# [29]
IDE_PDCS1# [29]
IDE_SIORDY
IDE_SDDREQ
INT_IRQ15
IDE_PDD[15:0] [29]
IDE_PDD0
IDE_PDD1
IDE_PDD2
IDE_PDD3
IDE_PDD4
IDE_PDD5
IDE_PDD6
IDE_PDD7
IDE_PDD8
IDE_PDD9
IDE_PDD10
IDE_PDD11
IDE_PDD12
IDE_PDD13
IDE_PDD14
IDE_PDD15
IDE_SDD7
4.7KOhm
SRN2A
SRN2B
SRN2C
SRN2D
SRN3A
SRN3B
SRN3C
SRN3D
+1.8V
S_IDEAVDD
SL6 120Ohm/100Mhz
SC49 1UF/16V /X
SC50 0.1UF/16V /X
GND
Title : SB-966L(1)
ASUSTeK COMPUTER INC.
Engineer: Kell Huang
Size A3
Project Name Z96H
Rev 1.00G
Date: Wednesday, May 17, 2006
Sheet 17 of 60

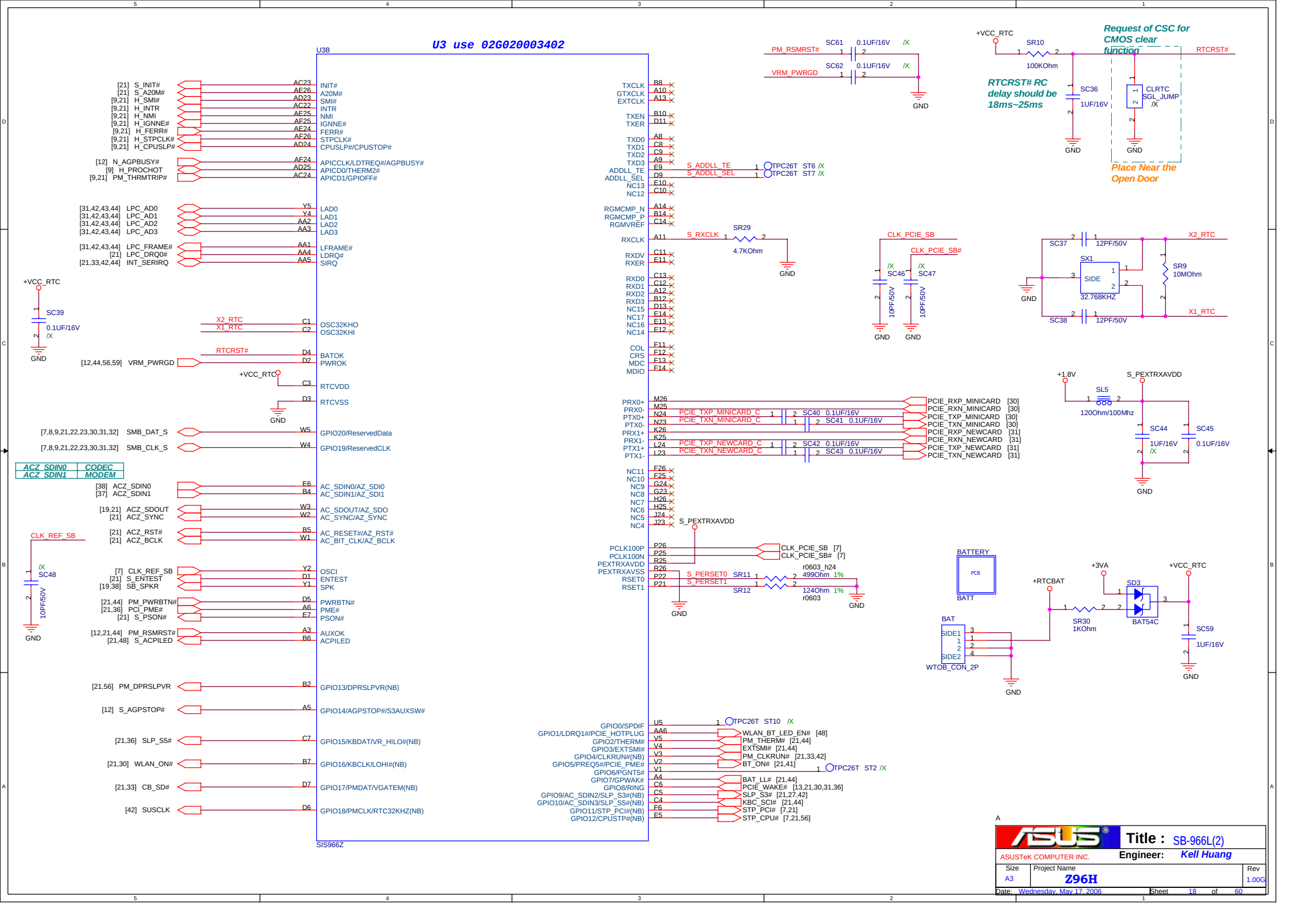
U3 use 02G020003402
U3B
SIS966Z
[21] S_INIT# AC23 INIT#
[21] S_A20M# AE26 A20M#
[9,21] H_SMI# AD23 SMI#
[9,21] H_INTR AC22 INTR
[9,21] H_NMI AF25 NMI
[9,21] H_IGNNE# AF25 IGNNE#
[9,21] H_FERR# AE24 FERR#
[9,21] H_STPCLK# AE26 STPCLK#
[9,21] H_CPUSLP# AD24 CPUSLP#/CPUSTOP#
[12] N_AGPBUSY# AF24 APICCLK/LDTREQ#/AGPBUSY#
[9] H_PROCHOT AD25 APICD0/THERM2#
[9,21] PM_THRMTRIP# AC24 APICD1/GPIOFF#
[31,42,43,44] LPC_AD0 Y5 LAD0
[31,42,43,44] LPC_AD1 Y4 LAD1
[31,42,43,44] LPC_AD2 AA2 LAD2
[31,42,43,44] LPC_AD3 AA3 LAD3
[31,42,43,44] LPC_FRAME# AA1 LFRAME#
[21] LPC_DRQ0# AA4 LDRQ#
[21,33,42,44] INT_SERIRQ AA5 SIRQ
+VCC_RTC
SC39 0.1UF/16V /X
GND
X2_RTC C1 OSC32KHO
X1_RTC C2 OSC32KHI
RTCRST# D4 BATOK
[12,44,56,59] VRM_PWRGD D2 PWROK
+VCC_RTC C3 RTCVDD
D3 RTCVSS
GND
[7,8,9,21,22,23,30,31,32] SMB_DAT_S W5 GPIO20/ReservedData
[7,8,9,21,22,23,30,31,32] SMB_CLK_S W4 GPIO19/ReservedCLK
ACZ_SDIN0 CODEC
ACZ_SDIN1 MODEM
[38] ACZ_SDIN0 E6 AC_SDIN0/AZ_SDI0
[37] ACZ_SDIN1 B4 AC_SDIN1/AZ_SDI1
[19,21] ACZ_SDOUT W3 AC_SDOUT/AZ_SDO
[21] ACZ_SYNC W2 AC_SYNC/AZ_SYNC
[21] ACZ_RST# B5 AC_RESET#/AZ_RST#
[21] ACZ_BCLK W1 AC_BIT_CLK/AZ_BCLK
CLK_REF_SB
/X SC48 10PF/50V
GND
[7] CLK_REF_SB Y2 OSCI
[21] S_ENTEST D1 ENTEST
[19,38] SB_SPKR Y1 SPK
[21,44] PM_PWRBTN# D5 PWRBTN#
[21,36] PCI_PME# A6 PME#
[21] S_PSON# E7 PSON#
[12,21,44] PM_RSMRST# A3 AUXOK
[21,48] S_ACPILED B6 ACPILED
[21,56] PM_DPRSLPVR B2 GPIO13/DPRSLPVR(NB)
[12] S_AGPSTOP# A5 GPIO14/AGPSTOP#/S3AUXSW#
[21,36] SLP_S5# C7 GPIO15/KBDAT/VR_HILO#(NB)
[21,30] WLAN_ON# B7 GPIO16/KBCLK/LOHI#(NB)
[21,33] CB_SD# D7 GPIO17/PMDAT/VGATEM(NB)
[42] SUSCLK D6 GPIO18/PMCLK/RTC32KHZ(NB)
TXCLK B8
GTXCLK A10
EXTCLK A13
TXEN B10
TXER D11
TXD0 A8
TXD1 C8
TXD2 C9
TXD3 A9
ADDLL_TE E9 S_ADDLL_TE 1 TPC26T ST6 /X
ADDLL_SEL D9 S_ADDLL_SEL 1 TPC26T ST7 /X
NC13 E10
NC12 C10
RGMCMP_N A14
RGMCMP_P B14
RGMVREF C14
RXCLK A11 S_RXCLK 1 SR29 2 4.7KOhm GND
RXDV C11
RXER E11
RXD0 C13
RXD1 C12
RXD2 A12
RXD3 B12
NC15 D13
NC17 E14
NC16 E13
NC14 E12
COL F11
CRS F12
MDC F13
MDIO F14
PRX0+ M26 PCIE_RXP_MINICARD [30]
PRX0- M25 PCIE_RXN_MINICARD [30]
PTX0+ N24 PCIE_TXP_MINICARD_C 1 2 SC40 0.1UF/16V PCIE_TXP_MINICARD [30]
PTX0- N23 PCIE_TXN_MINICARD_C 1 2 SC41 0.1UF/16V PCIE_TXN_MINICARD [30]
PRX1+ K26 PCIE_RXP_NEWCARD [31]
PRX1- K25 PCIE_RXN_NEWCARD [31]
PTX1+ L24 PCIE_TXP_NEWCARD_C 1 2 SC42 0.1UF/16V PCIE_TXP_NEWCARD [31]
PTX1- L23 PCIE_TXN_NEWCARD_C 1 2 SC43 0.1UF/16V PCIE_TXN_NEWCARD [31]
NC11 F26
NC10 F25
NC9 G24
NC8 G23
NC7 H26
NC6 H25
NC5 J24
NC4 J23
S_PEXTRXAVDD
PCLK100P P26 CLK_PCIE_SB [7]
PCLK100N P25 CLK_PCIE_SB# [7]
PEXTRXAVDD R25
PEXTRXAVSS R26
RSET0 P22 S_PERSET0 SR11 1 2 r0603_h24 499Ohm 1%
RSET1 P21 S_PERSET1 1 2 SR12 124Ohm 1% r0603 GND
GND
GPIO0/SPDIF U5 1 TPC26T ST10 /X
GPIO1/LDRQ1#/PCIE_HOTPLUG AA6 WLAN_BT_LED_EN# [48]
GPIO2/THERM# V5 PM_THERM# [21,44]
GPIO3/EXTSMI# V4 EXTSMI# [21,44]
GPIO4/CLKRUN#(NB) V3 PM_CLKRUN# [21,33,42]
GPIO5/PREQ5#/PCIE_PME# V2 BT_ON# [21,41]
GPIO6/PGNT5# V1 1 TPC26T ST2 /X
GPIO7/GPWAK# A4 BAT_LL# [21,44]
GPIO8/RING C6 PCIE_WAKE# [13,21,30,31,36]
GPIO9/AC_SDIN2/SLP_S3#(NB) C5 SLP_S3# [21,27,42]
GPIO10/AC_SDIN3/SLP_S5#(NB) C4 KBC_SCI# [21,44]
GPIO11/STP_PCI#(NB) F6 STP_PCI# [7,21]
GPIO12/CPUSTP#(NB) E5 STP_CPU# [7,21,56]
PM_RSMRST# SC61 0.1UF/16V /X
VRM_PWRGD SC62 0.1UF/16V /X
GND
+VCC_RTC SR10 100KOhm RTCRST#
Request of CSC for CMOS clear function
RTCRST# RC delay should be 18ms~25ms
SC36 1UF/16V
CLRTC SGL_JUMP /X
GND
Place Near the Open Door
CLK_PCIE_SB
CLK_PCIE_SB#
/X SC46 10PF/50V
/X SC47 10PF/50V
GND
SC37 12PF/50V
X2_RTC
SX1 SIDE 32.768KHZ
SR9 10MOhm
SC38 12PF/50V
X1_RTC
+1.8V
S_PEXTRXAVDD
SL5 120Ohm/100Mhz
SC44 1UF/16V /X
SC45 0.1UF/16V
BATTERY PCB BATT
BAT SIDE1 SIDE2 WTOB_CON_2P
+RTCBAT
SR30 1KOhm
+3VA
SD3 BAT54C
+VCC_RTC
SC59 1UF/16V
Title : SB-966L(2)
ASUSTeK COMPUTER INC.
Engineer: Kell Huang
Size A3
Project Name Z96H
Rev 1.00G
Date: Wednesday, May 17, 2006
Sheet 18 of 60

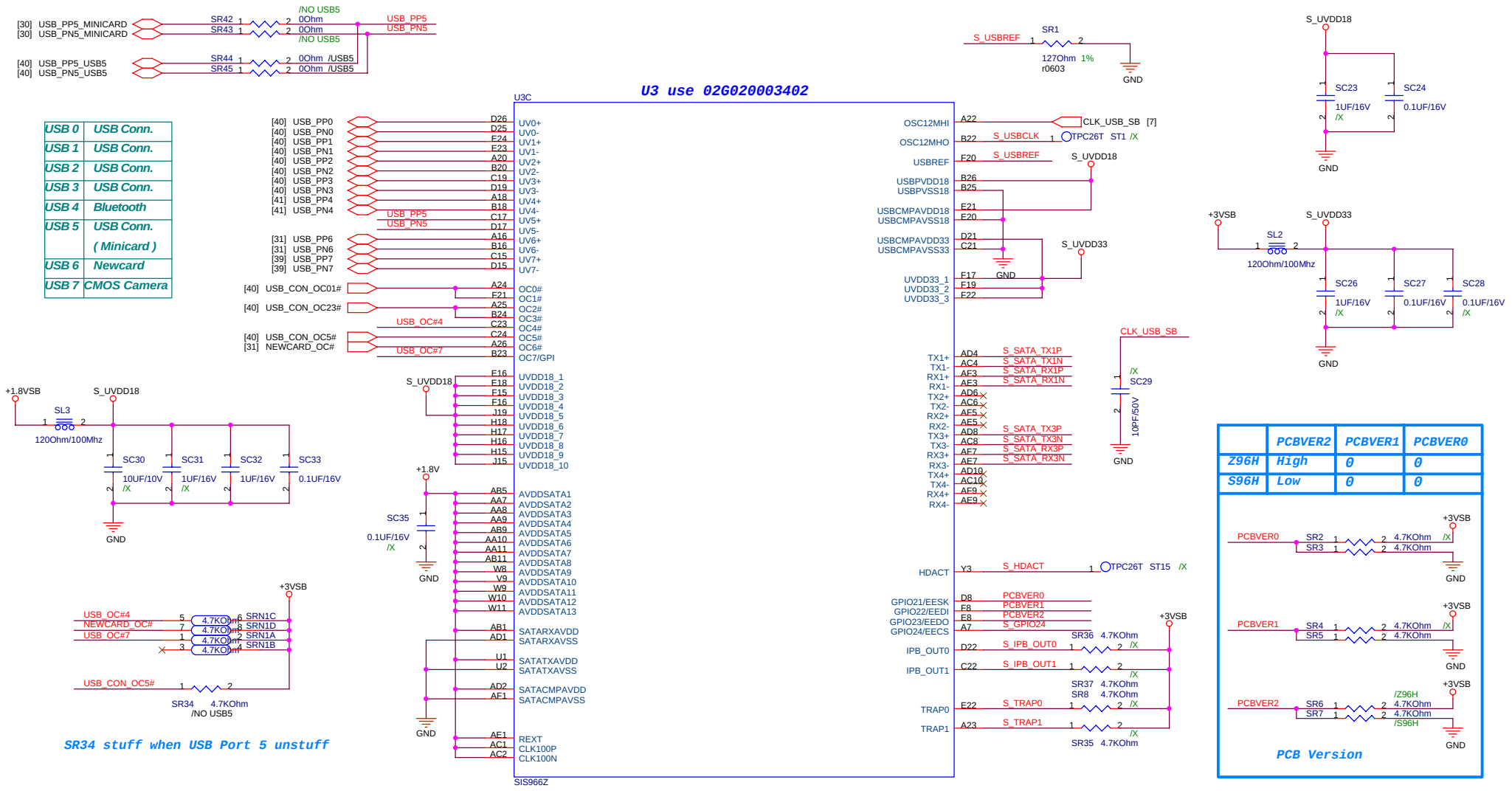

SB Straping

Signal	Description	High	Low	Default
S_TRAP0	MuTIOL Operation Frequency	66MHz	133MHz	Internal pull-down
S_TRAP1	Reserved			Internal pull-down
S_IPB_OUT0	MuTIOL Clock PLL	Disable	Enable	Internal pull-down
S_IPB_OUT1	MuTIOL Version	v1.0	v2.0	Internal pull-down
SB_SPKR	First Flash Memory Cycle Type	Firmware Memory Type	LPC Memory Type	Internal pull-down
ACZ_SDOUT	Trap From	PCI AD	ROM	Internal pull-down
USB_OC#4	SB Debug Mode	Disable	Enable	External pull-up

	PCBVER2	PCBVER1	PCBVER0
Z96H	High	0	0
S96H	Low	0	0

ASUSTeK COMPUTER INC

Title : SB-966L(3)

Engineer: Kell Huang

Size	Project Name	Rev
A3	Z96H	1.00G

Date: Wednesday, May 17, 2006 Sheet 19 of 60

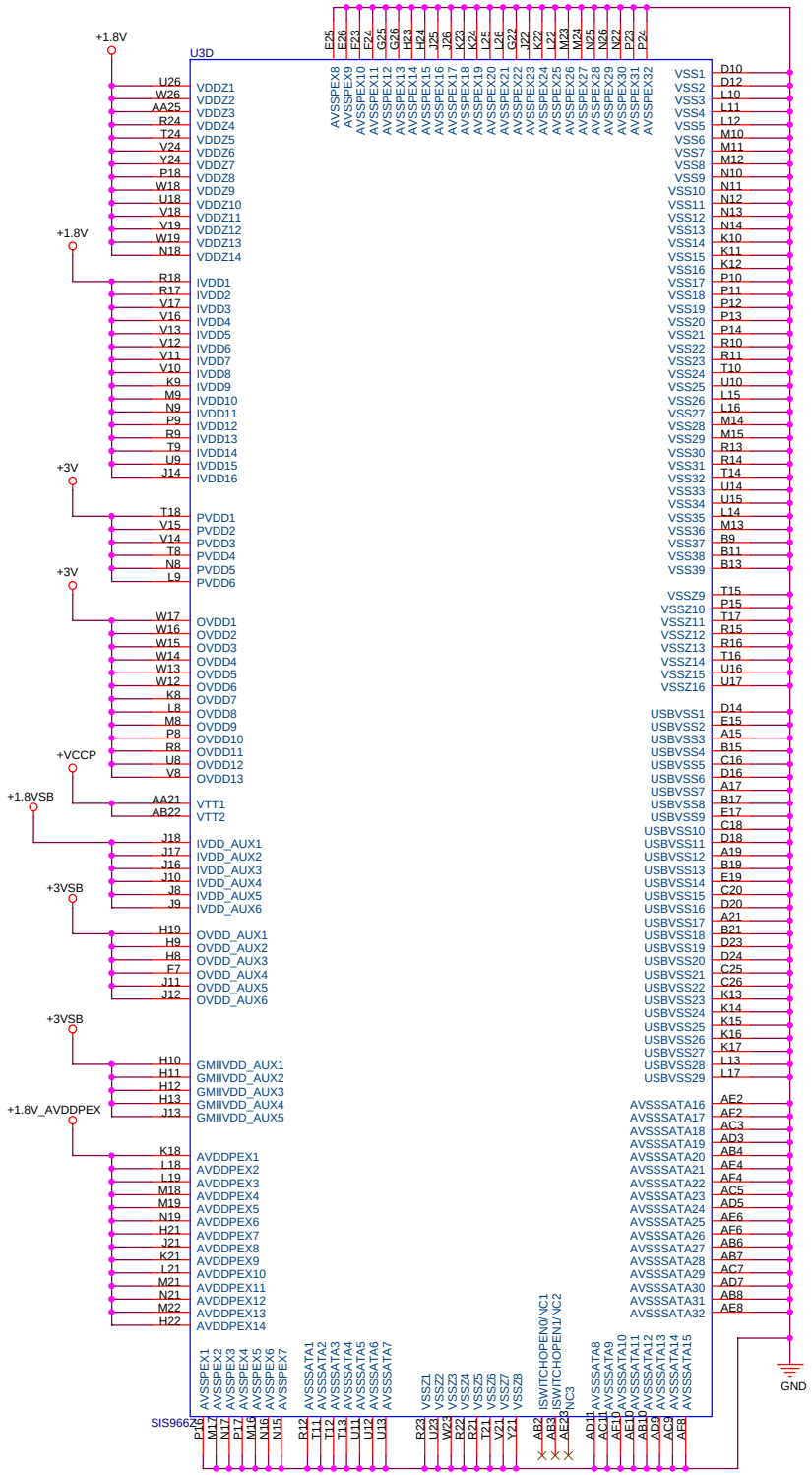

U3 use 02G020003402

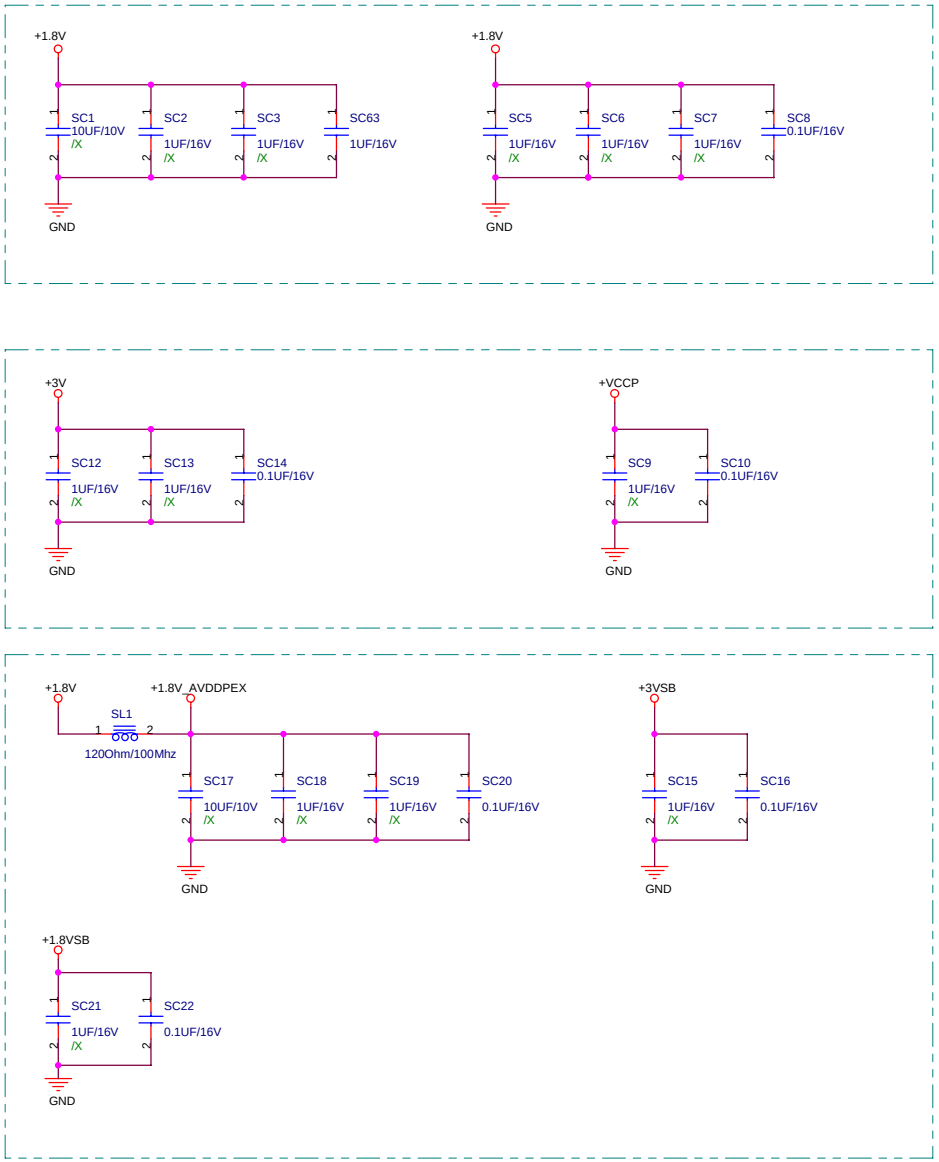

ASUSTeK COMPUTER INC.	Title : SB-966L(4)	
	Engineer: Kell Huang	
Size A3	Project Name Z96H	Rev 1.00G
Date: Wednesday, May 17, 2006	Sheet 20 of 60	

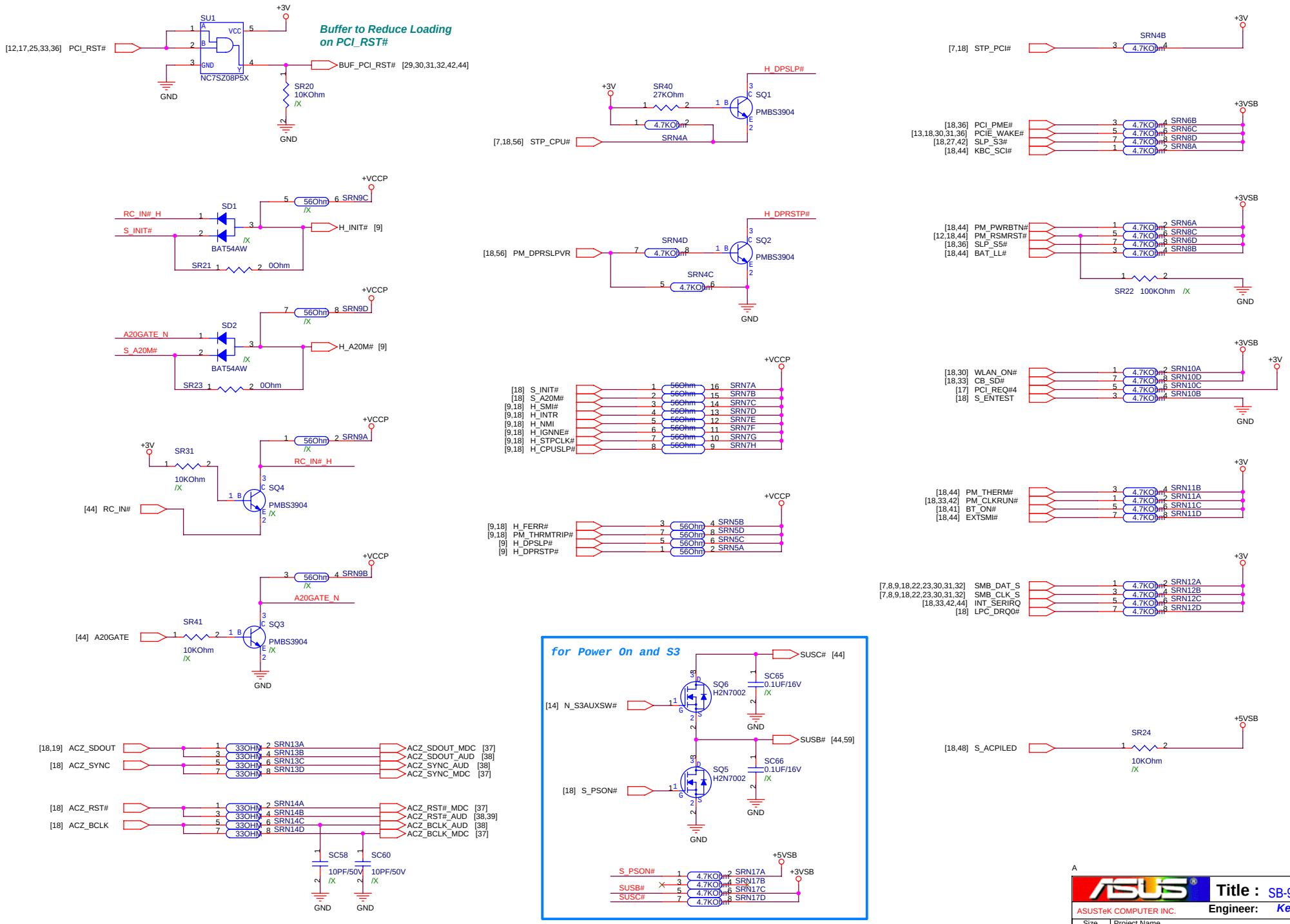
Buffer to Reduce Loading on PCI_RST#
[12,17,25,33,36] PCI_RST#
SU1
NC7SZ08P5X
+3V
GND
SR20 10KOhm /X
BUF_PCI_RST# [29,30,31,32,42,44]
H_DPSLP#
SR40 27KOhm
SQ1
PMBS3904
[7,18,56] STP_CPU#
SRN4A
H_DPRSTP#
SRN4D
SQ2
[18,56] PM_DPRSLPVR
SRN4C
+VCCP
RC_IN#_H
S_INIT#
SD1
BAT54AW
SRN9C
H_INIT# [9]
SR21 0Ohm
A20GATE_N
S_A20M#
SD2
SRN9D
H_A20M# [9]
SR23 0Ohm
SR31 10KOhm /X
SQ4
SRN9A
[44] RC_IN#
SR41 10KOhm /X
SQ3
SRN9B
[44] A20GATE
[18] S_INIT#
[18] S_A20M#
[9,18] H_SMI#
[9,18] H_INTR
[9,18] H_NMI
[9,18] H_IGNNE#
[9,18] H_STPCLK#
[9,18] H_CPUSLP#
SRN7A
SRN7B
SRN7C
SRN7D
SRN7E
SRN7F
SRN7G
SRN7H
[9,18] H_FERR#
[9,18] PM_THRMTRIP#
[9] H_DPSLP#
[9] H_DPRSTP#
SRN5B
SRN5D
SRN5C
SRN5A
[18,19] ACZ_SDOUT
[18] ACZ_SYNC
SRN13A
SRN13B
SRN13C
SRN13D
ACZ_SDOUT_MDC [37]
ACZ_SDOUT_AUD [38]
ACZ_SYNC_AUD [38]
ACZ_SYNC_MDC [37]
[18] ACZ_RST#
[18] ACZ_BCLK
SRN14A
SRN14B
SRN14C
SRN14D
ACZ_RST#_MDC [37]
ACZ_RST#_AUD [38,39]
ACZ_BCLK_AUD [38]
ACZ_BCLK_MDC [37]
SC58 10PF/50V /X
SC60 10PF/50V /X
for Power On and S3
SUSC# [44]
SQ6 H2N7002
SC65 0.1UF/16V /X
[14] N_S3AUXSW#
SUSB# [44,59]
SQ5 H2N7002
SC66 0.1UF/16V /X
[18] S_PSON#
+5VSB
+3VSB
S_PSON#
SUSB#
SUSC#
SRN17A
SRN17B
SRN17C
SRN17D
[7,18] STP_PCI#
SRN4B
[18,36] PCI_PME#
[13,18,30,31,36] PCIE_WAKE#
[18,27,42] SLP_S3#
[18,44] KBC_SCI#
SRN6B
SRN6C
SRN8D
SRN8A
[18,44] PM_PWRBTN#
[12,18,44] PM_RSMRST#
[18,36] SLP_S5#
[18,44] BAT_LL#
SRN6A
SRN8C
SRN6D
SRN8B
SR22 100KOhm /X
[18,30] WLAN_ON#
[18,33] CB_SD#
[17] PCI_REQ#4
[18] S_ENTEST
SRN10A
SRN10D
SRN10C
SRN10B
[18,44] PM_THERM#
[18,33,42] PM_CLKRUN#
[18,41] BT_ON#
[18,44] EXTSMI#
SRN11B
SRN11A
SRN11C
SRN11D
[7,8,9,18,22,23,30,31,32] SMB_DAT_S
[7,8,9,18,22,23,30,31,32] SMB_CLK_S
[18,33,42,44] INT_SERIRQ
[18] LPC_DRQ0#
SRN12A
SRN12B
SRN12C
SRN12D
[18,48] S_ACPILED
SR24 10KOhm /X
Title : SB-966L(5)
ASUSTeK COMPUTER INC.
Engineer: Kell Huang
Size A3
Project Name Z96H
Rev 1.00G
Date: Wednesday, May 17, 2006
Sheet 21 of 60

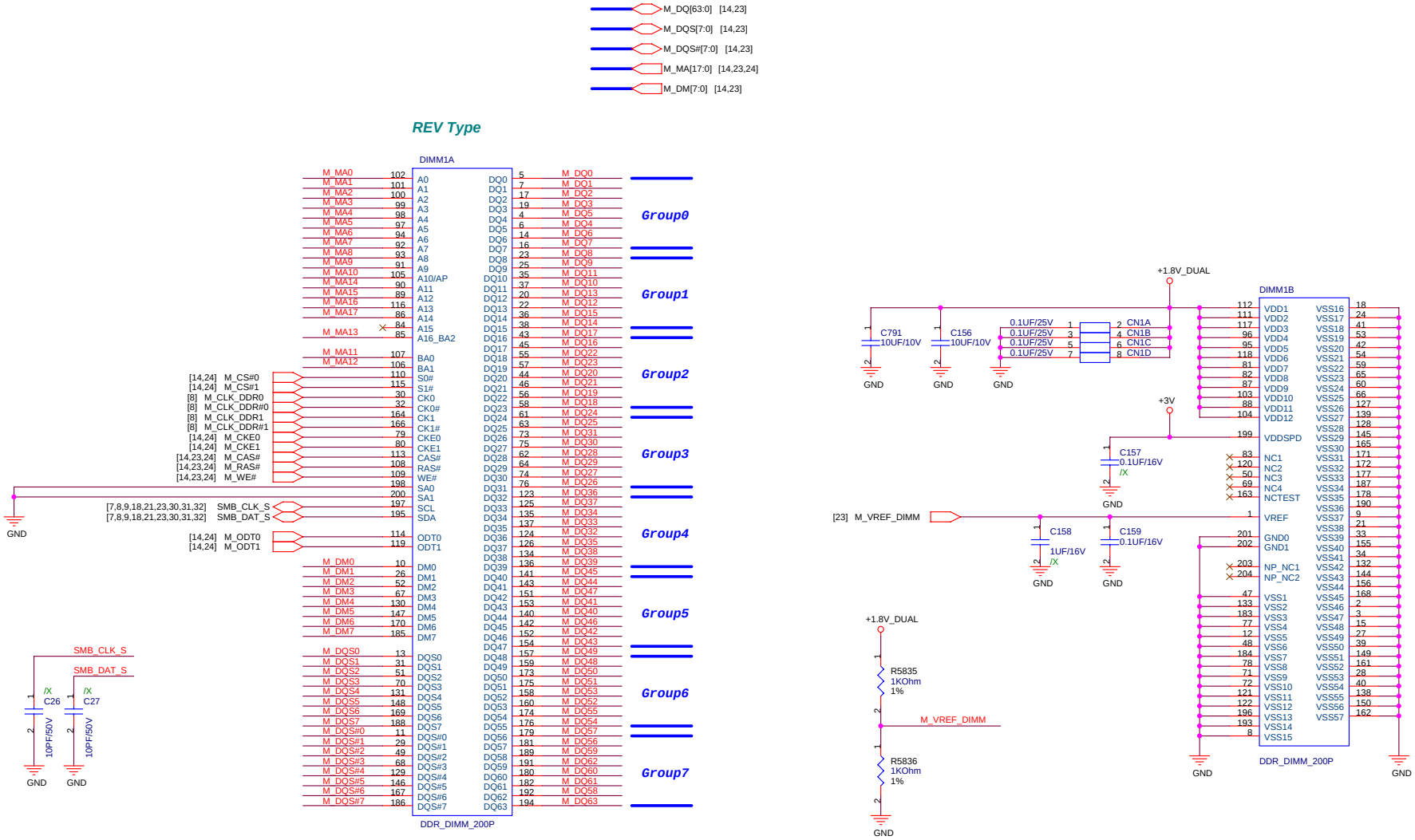

ASUSTeK COMPUTER INC.	Title : DDR2 SO-DIMM1	
	Engineer: Kell Huang	
Size: Custom	Project Name: Z96H	Rev: 1.00G
Date: Wednesday, May 17, 2006	Sheet 22 of 60	

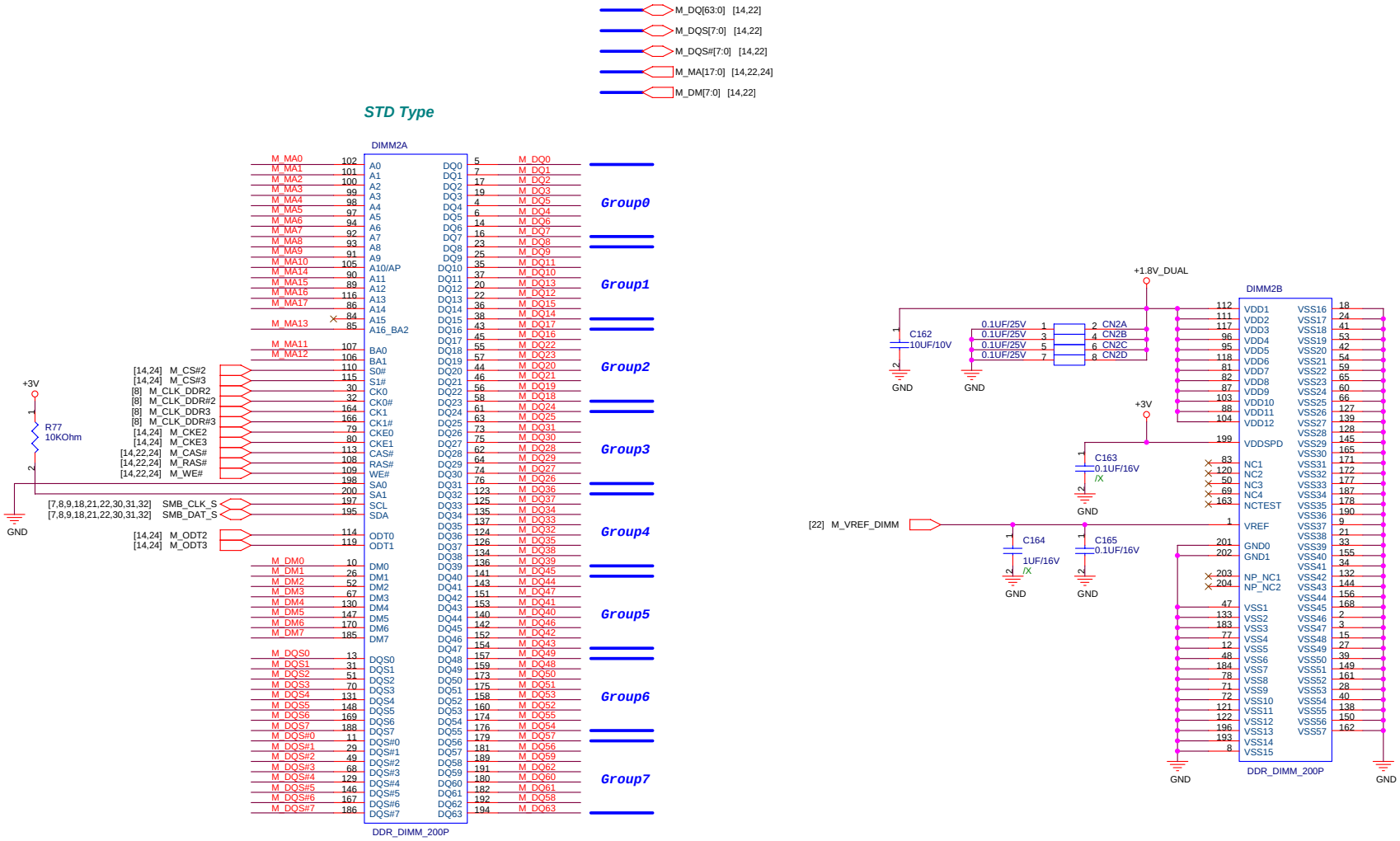

A

ASUS

Title : DDR2 SO-DIMM2

ASUSTeK COMPUTER INC. NB1 **Engineer:** *Kell Huang*

Size	Project Name	Rev
Custom	Z96H	1.00G

Date: Wednesday, May 17, 2006 Sheet 23 of 60

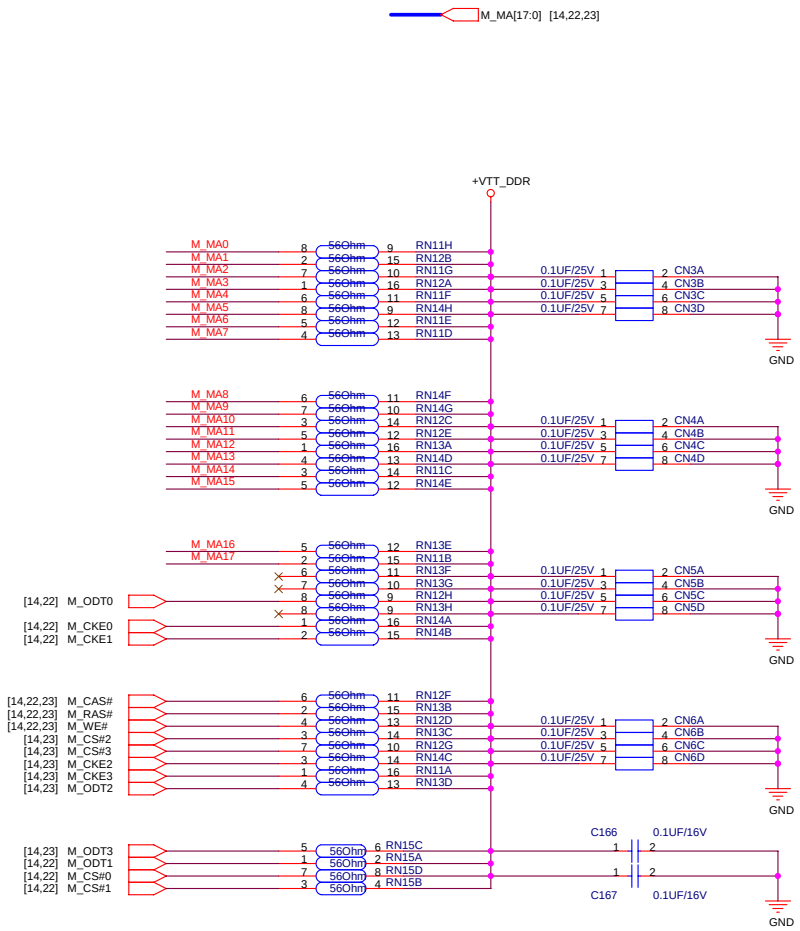

A

ASUS	Title : DDR2 TERMINATION	
ASUSTeK COMPUTER INC. NB1	Engineer: Kell Huang	
Size: Custom	Project Name: Z96H	Rev: 1.00G
Date: Wednesday, May 17, 2006	Sheet 24 of 60	

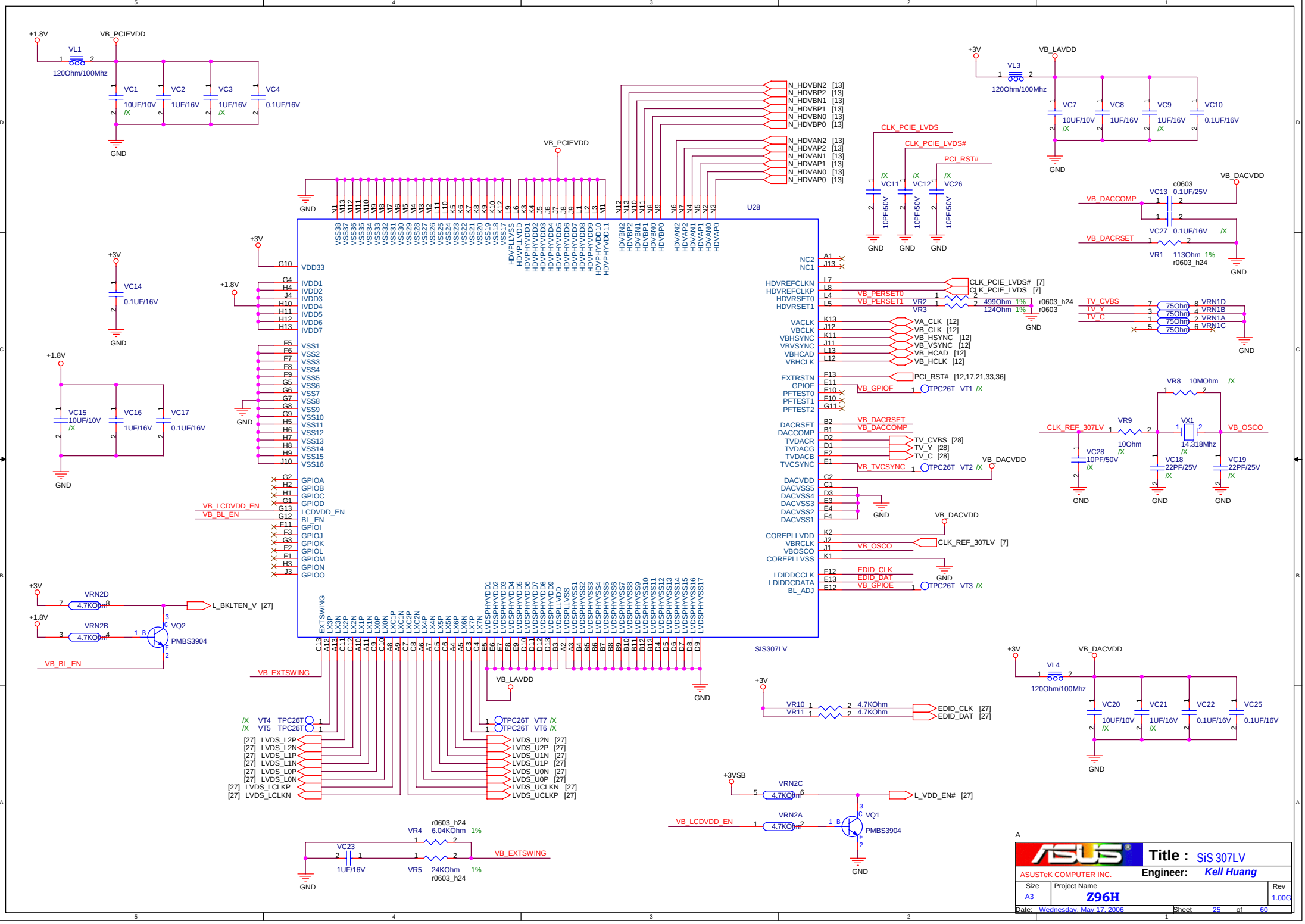
U28
SIS307LV
VB_PCIEVDD
VB_LAVDD
VB_DACVDD
VB_EXTSWING
VB_BL_EN
VB_LCDVDD_EN
VB_OSCO
VB_DACCOMP
VB_DACRSET
CLK_PCIE_LVDS
CLK_PCIE_LVDS#
PCI_RST#
CLK_REF_307LV
TV_CVBS
TV_Y
TV_C
EDID_CLK
EDID_DAT
L_BKLTEN_V [27]
L_VDD_EN# [27]
LVDS_L2P [27]
LVDS_L2N [27]
LVDS_L1P [27]
LVDS_L1N [27]
LVDS_L0P [27]
LVDS_L0N [27]
LVDS_LCLKP [27]
LVDS_LCLKN [27]
LVDS_U2N [27]
LVDS_U2P [27]
LVDS_U1N [27]
LVDS_U1P [27]
LVDS_U0N [27]
LVDS_U0P [27]
LVDS_UCLKN [27]
LVDS_UCLKP [27]
Title : SiS 307LV
ASUSTeK COMPUTER INC.
Engineer: Kell Huang
Size A3
Project Name Z96H
Rev 1.00G
Date: Wednesday, May 17, 2006
Sheet 25 of 60

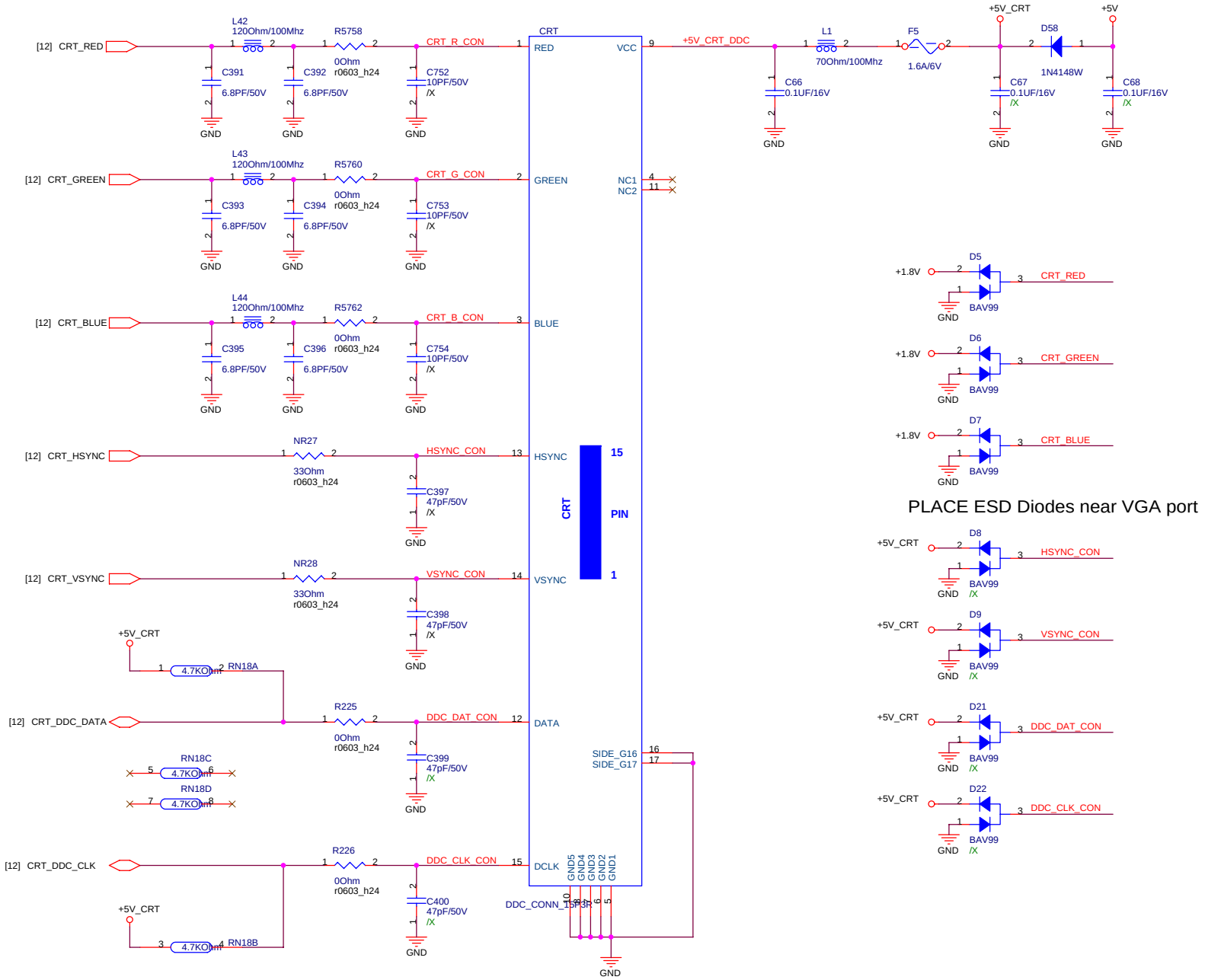

ASUSTeK COMPUTER INC	Title : CRT		
	Engineer: Kell Huang		
Size: Custom	Project Name: Z96H		Rev: 1.00G
Date: Wednesday, May 17, 2006	Sheet 26 of 60		

LCD Backlight Control

LCD LVDS Interface

Cable Requirement:
Impedence: 100 ohm +/- 10%
Length Mismatch <= 10 mils
Twisted Pair(Not Ribbon)
Maximum Length <= 16"

LCD Power

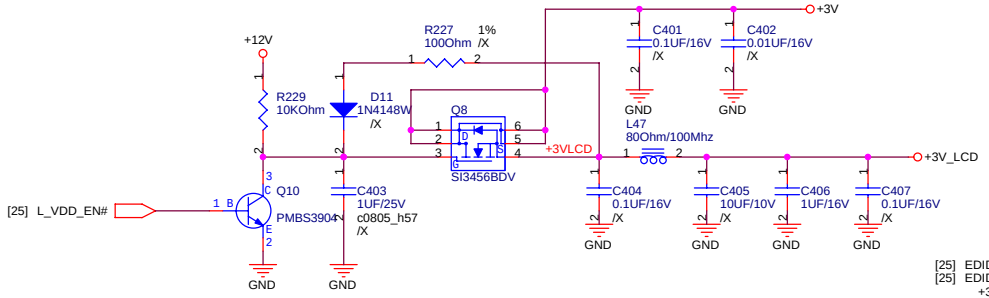

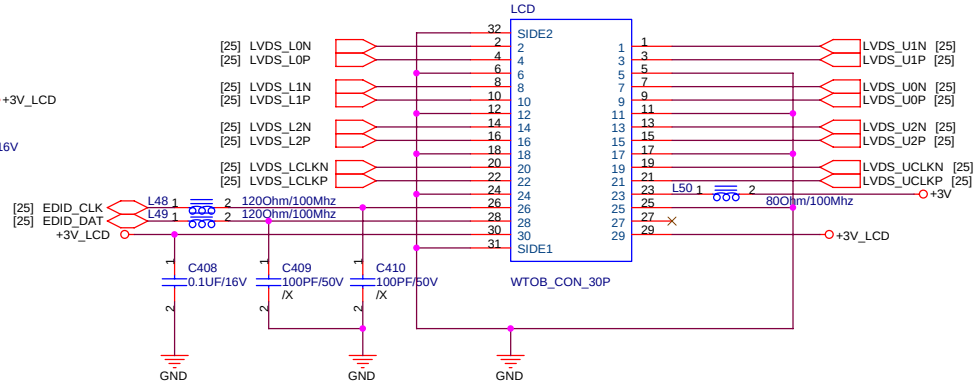

INVERTER Interface/Speaker CONN.

BIOS
BACK_OFF#:When user push "Fn+F7" button, BIOS active this pin to turn off back light.

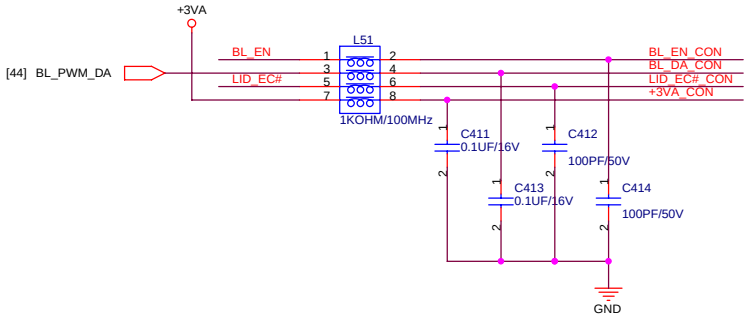

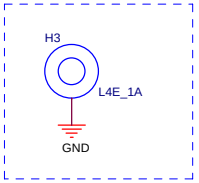

LCD NUT(3.0mm) *1

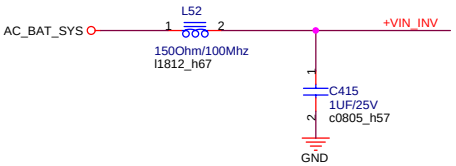

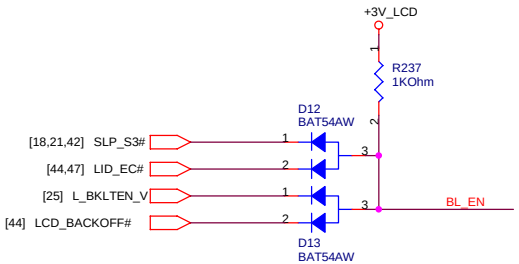

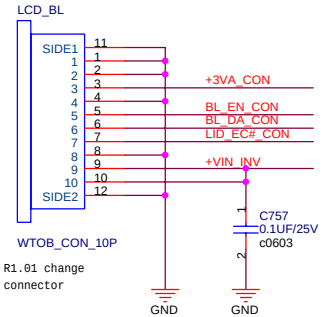

R1.01 change connector

A

ASUSTeK COMPUTER INC	Title : LVDS & INVERTER	
	Engineer: Kell Huang	
Size: Custom	Project Name: Z96H	Rev: 1.00G
Date: Wednesday, May 17, 2006	Sheet 27 of 60	

TV OUT

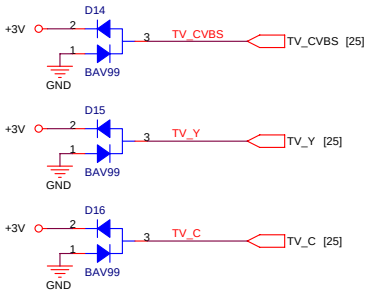

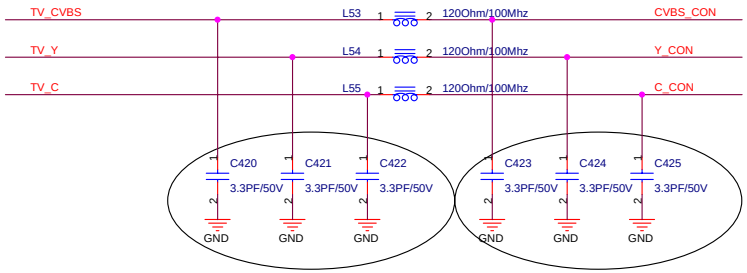

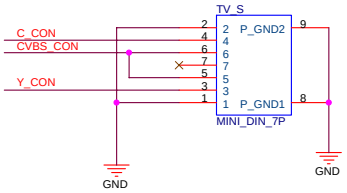

PLACE ESD Diodes near TV port

ASUS	Title :	TV OUT CONN
ASUSTeK COMPUTER INC	Engineer:	Kell Huang
Size: Custom	Project Name: Z96H	Rev: 1.00G
Date: Wednesday, May 17, 2006	Sheet 28 of 60	

HD_CSEL : Pull-Down, HDD as Master

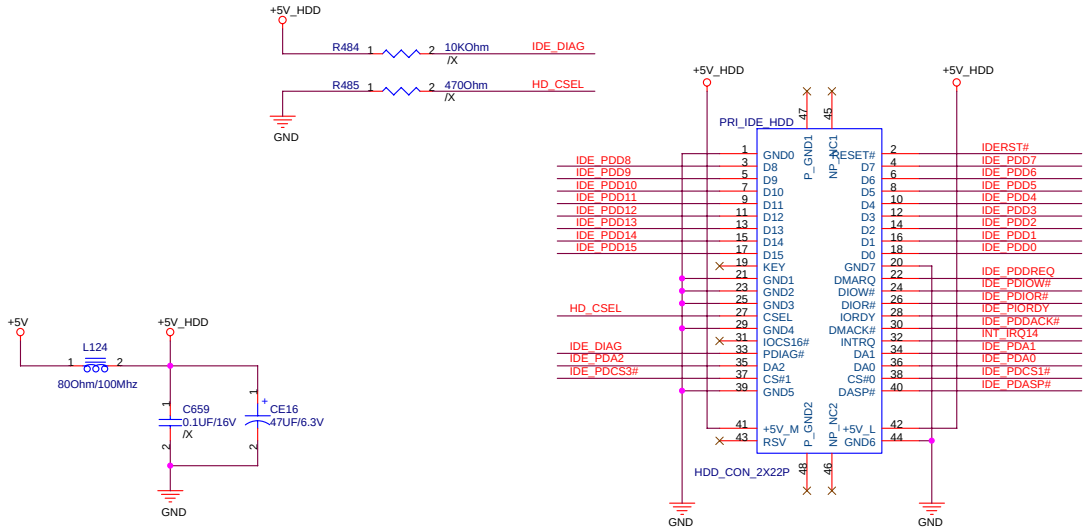

Remove SATA HDD

PATA HDD

ODD

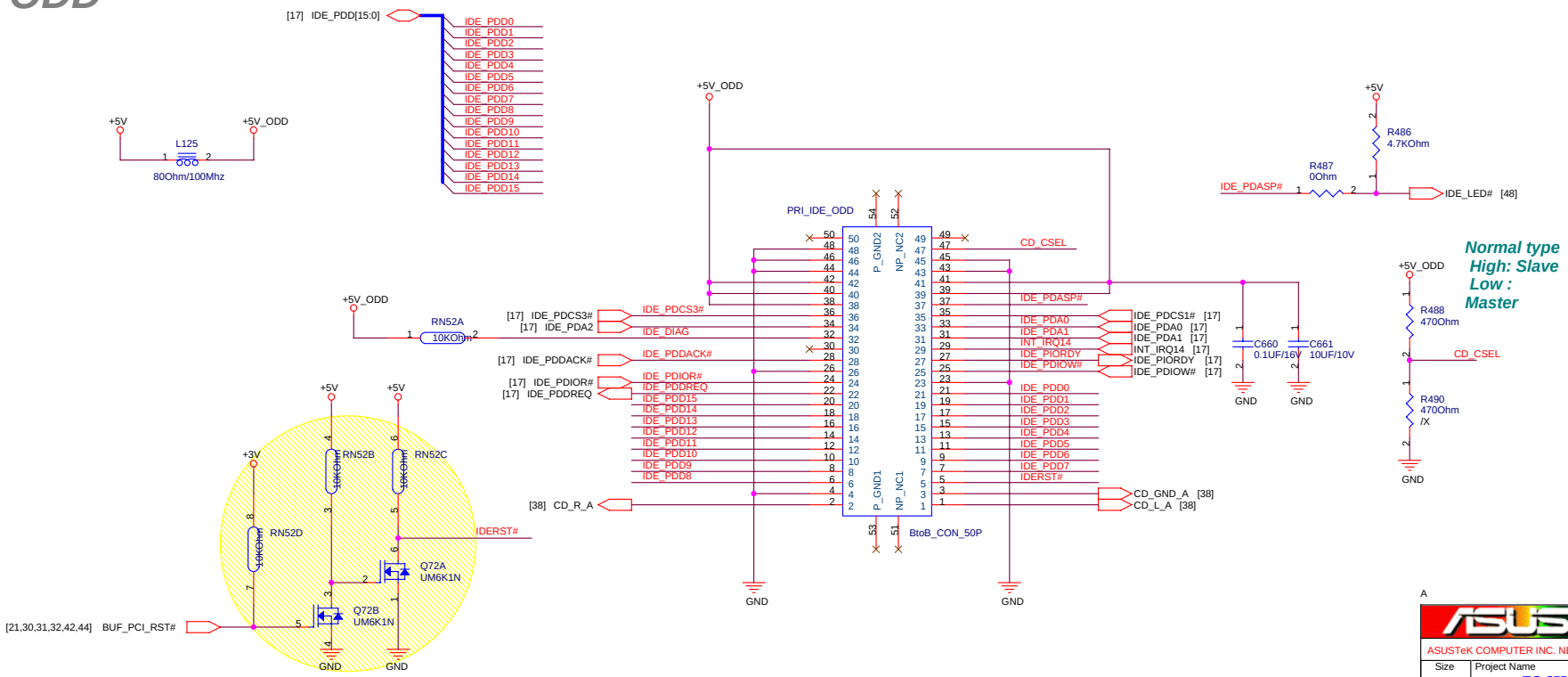

ASUSTeK COMPUTER INC. NB1	Title : HDD & ODD	
	Engineer: Kell Huang	
Size: Custom	Project Name: Z96H	Rev: 1.00G
Date: Wednesday, May 17, 2006	Sheet 29 of 60	

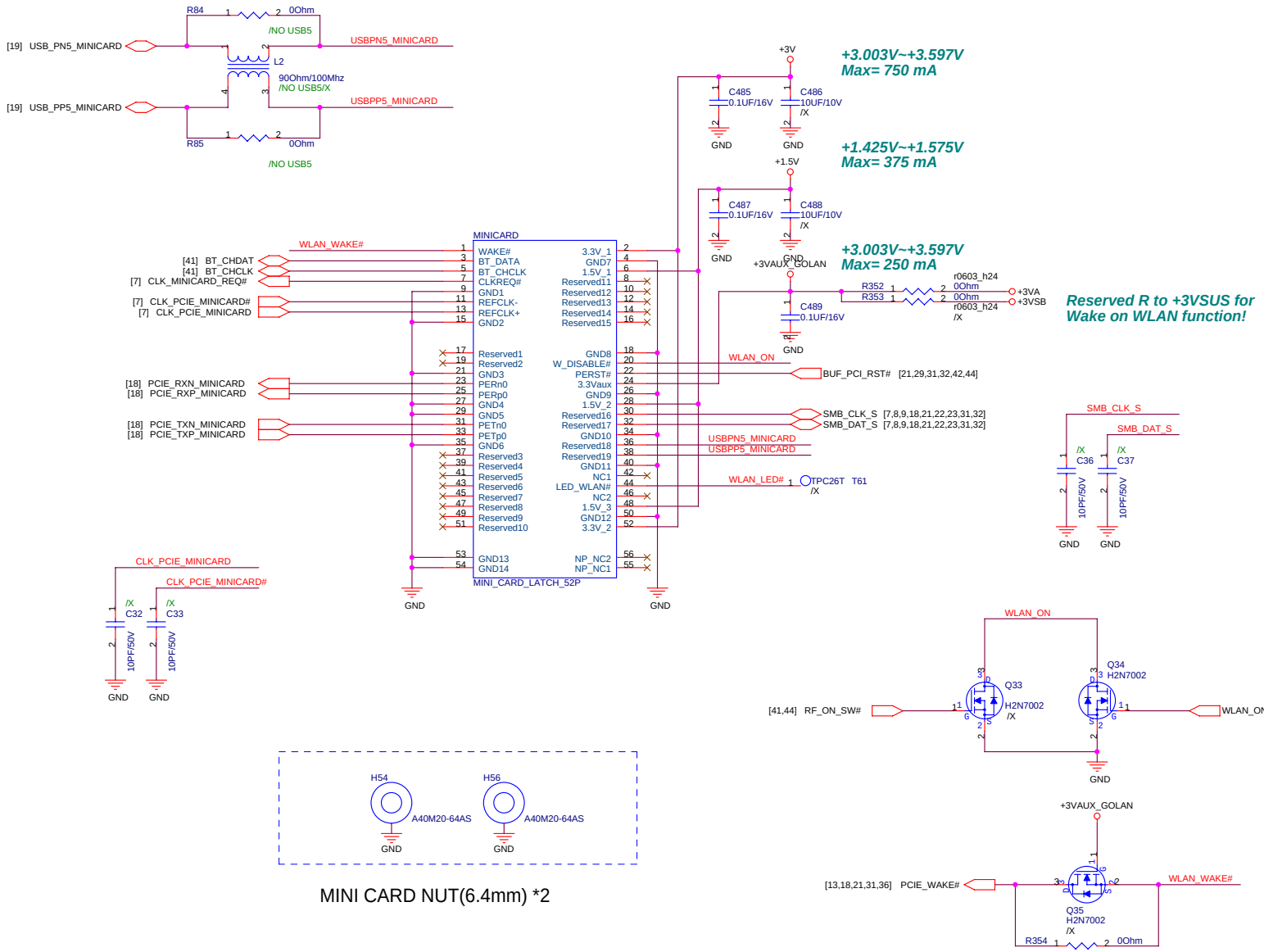

MINI CARD NUT(6.4mm) *2

ASUSTeK COMPUTER INC.	Title : MINICARD	Engineer: Kell Huang
Size: Custom	Project Name: Z96H	Rev: 1.00G
Date: Wednesday, May 17, 2006	Sheet 30 of 60	

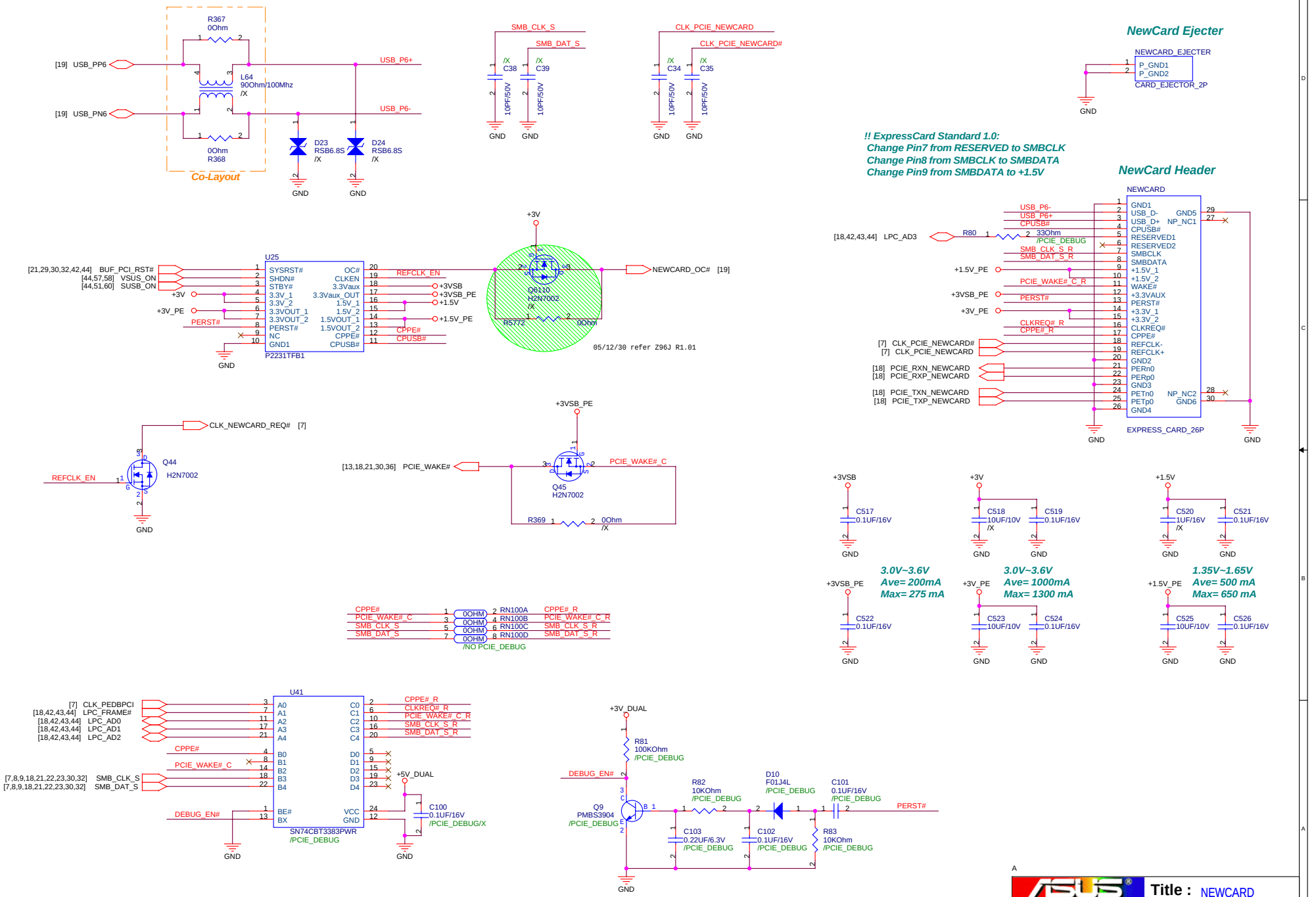

Title :	NEWCARD
ASUSTeK COMPUTER INC. NB1	Engineer: Kell Huang
Size: Custom	Project Name: Z96H
Rev	1.00G
Date: Wednesday, May 17, 2006	Sheet 31 of 60

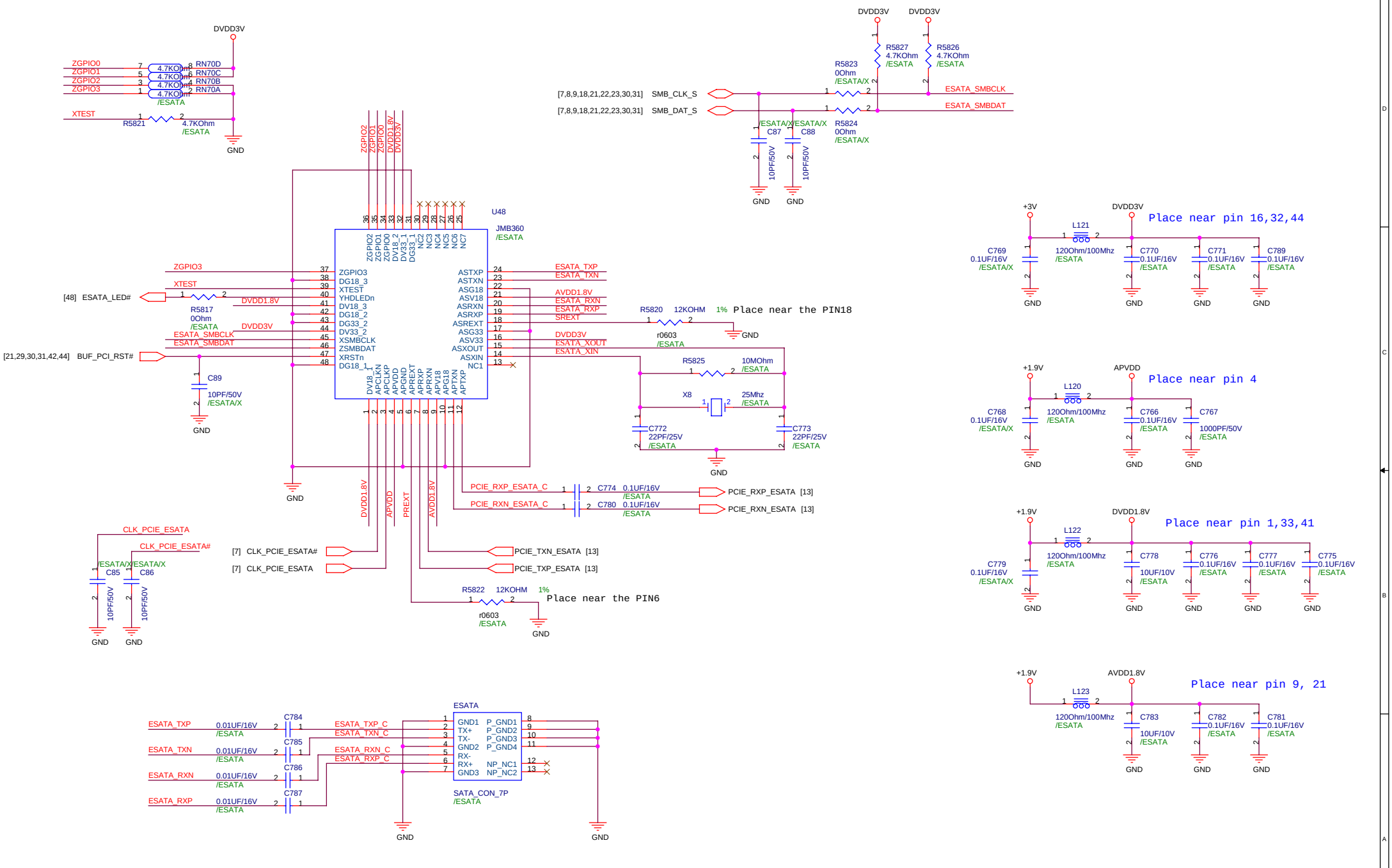

ASUSTeK COMPUTER INC	Title : ESATA		
	Engineer: Kell Huang		
Size A3	Project Name Z96H		Rev 1.00G
Date: Wednesday, May 17, 2006	Sheet 32 of 60		

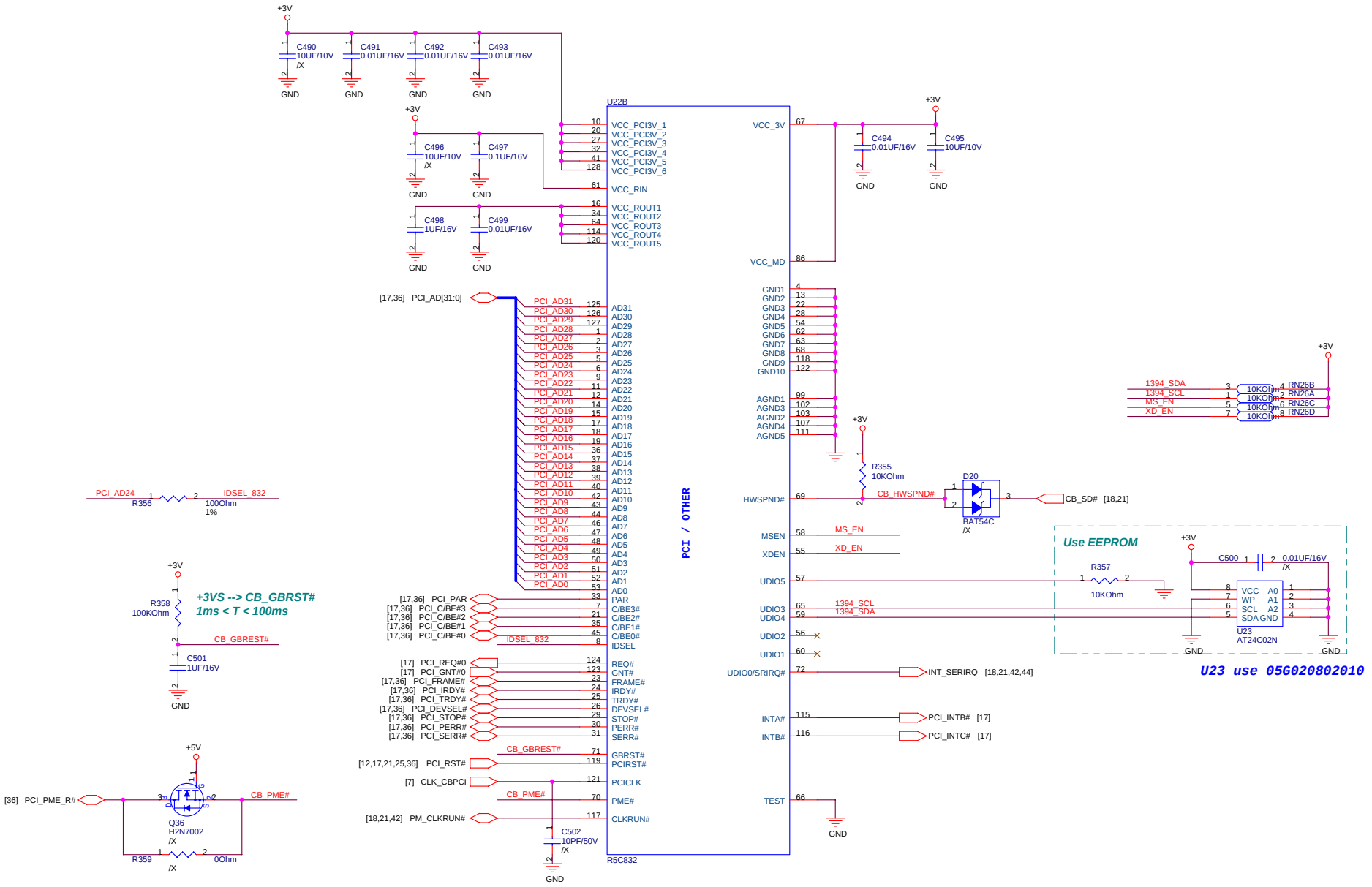

PCI Device	IDSEL#	REQ/GNT#	Interrupts
CARD READER	AD24	0	C
1394	AD24	0	B

A

ASUS

Title : CARD1394-R5C832(1)

ASUSTeK COMPUTER INC. MB6 Engineer: Kell Huang

Size	Project Name	Rev
Custom	Z96H	1.00G

Date: Wednesday, May 17, 2006 Sheet 33 of 60

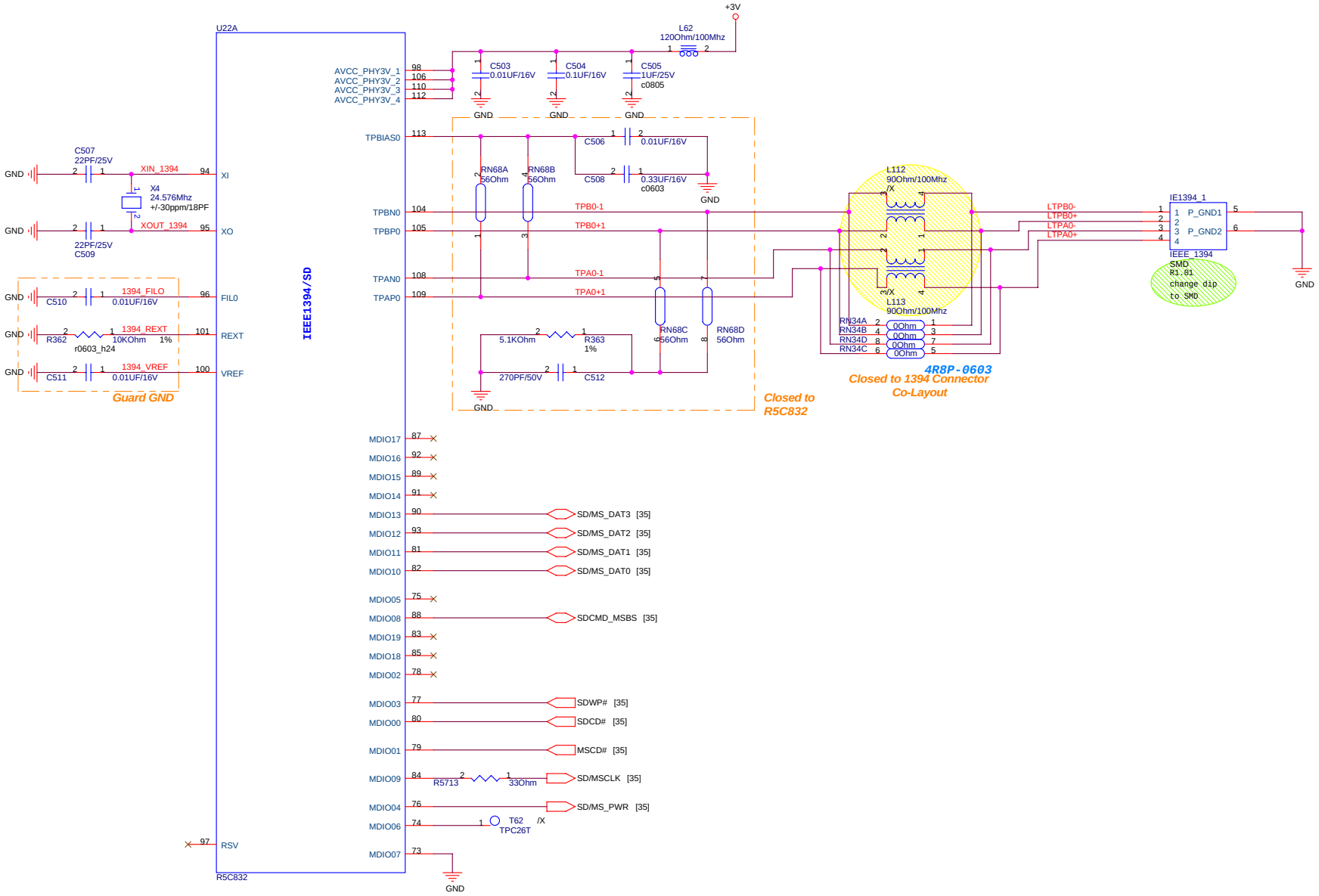

ASUSTeK COMPUTER INC. MB6	Title : CARD1394-R5C832(2)	Engineer: kell Huang
Size: Custom	Project Name: Z96H	Rev: 1.00G
Date: Wednesday, May 17, 2006	Sheet 34 of 60	

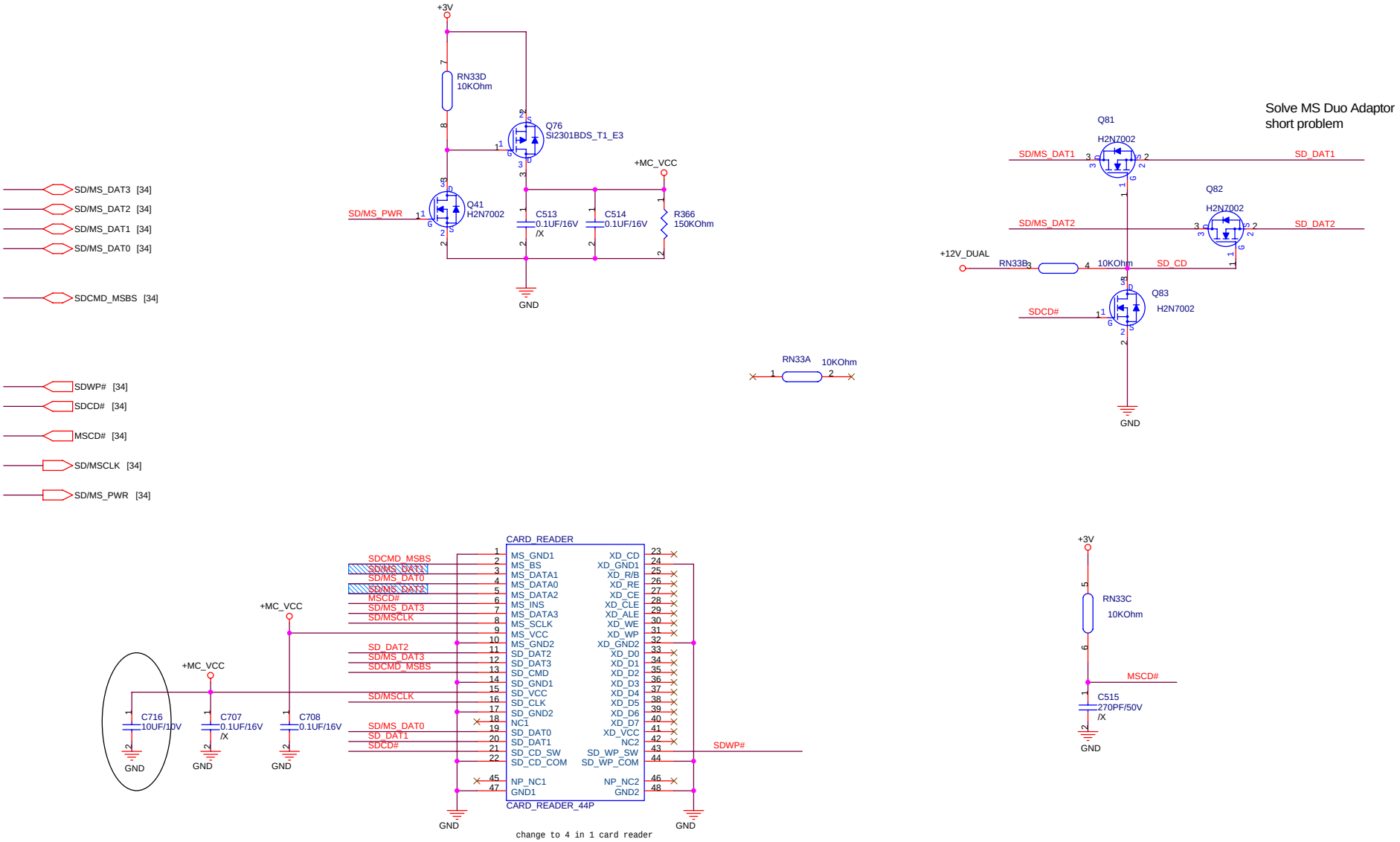

ASUSTeK COMPUTER INC	Title : 4 in 1 CARD READER	
	Engineer: Kell Huang	
Size A3	Project Name Z96H	Rev 1.00G
Date: Wednesday, May 17, 2006	Sheet 35 of 60	

PCI Device	IDSEL#	REQ/GNT#	Interrupts
LAN	AD23	1	D

	RTL8100C	RTL8110S Flora	RTL8110SB	
AVDDH	N/A	3.3AVDD	3.3AVDD	PIN 10/120
V_12P	2.5AVDD	N/A	3.3AVDD	PIN 12
AVDDL	3.3AVDD	2.5AVDD	2.5AVDD	PIN 3/7/20/16
V_DAC	N/A	2.5AVDD	2.5AVDD	
DVDD	2.5VDD	1.8VDD	1.2VDD	PIN 24/32/45/54/64 /78/99/110/116
DVDD_A	N/A	1.8AVDD	1.2AVDD	PIN 126

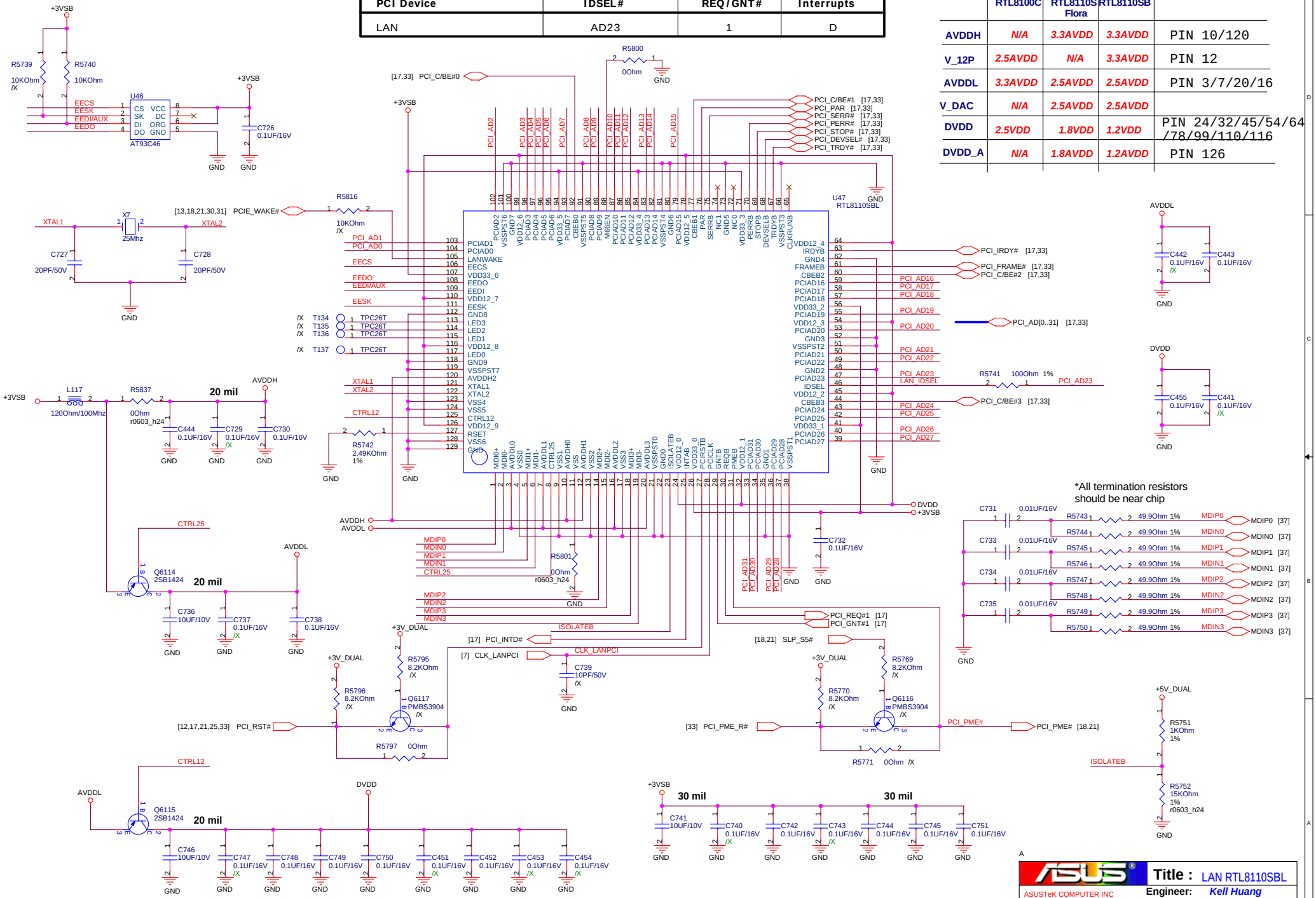

MDC CONN.

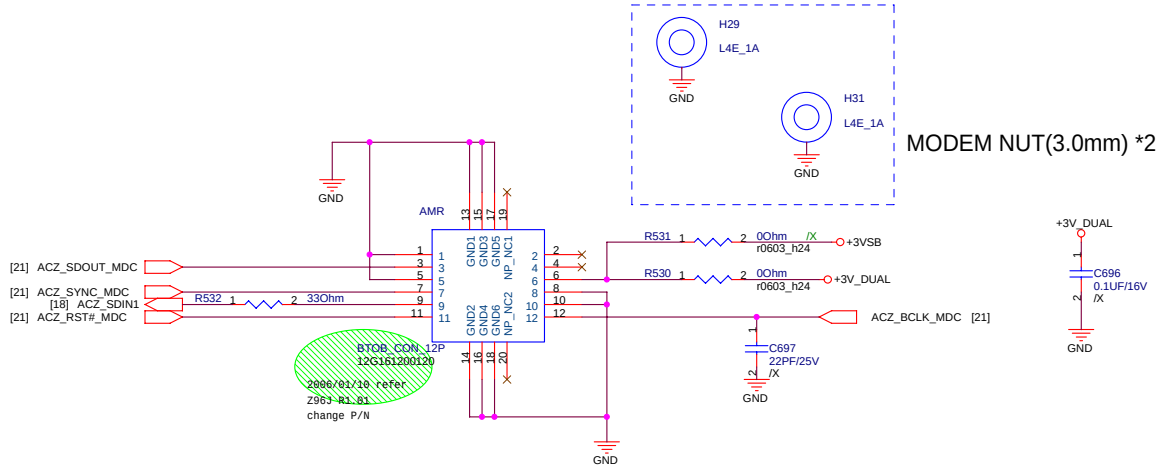

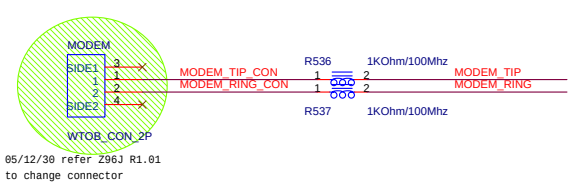

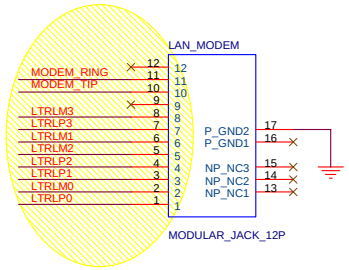

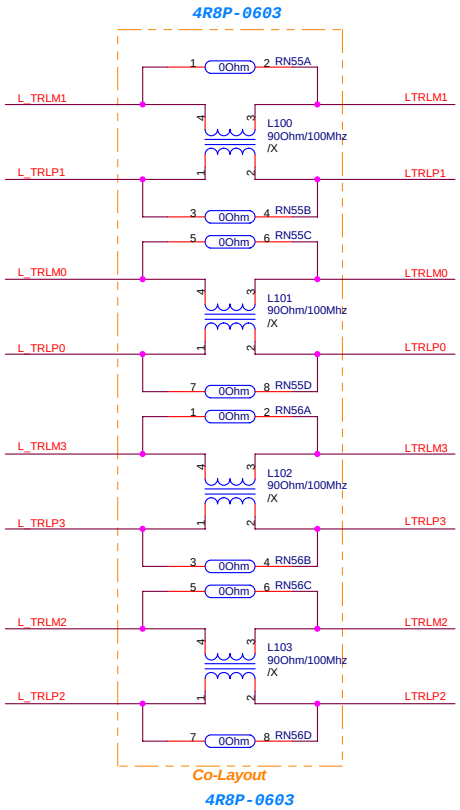

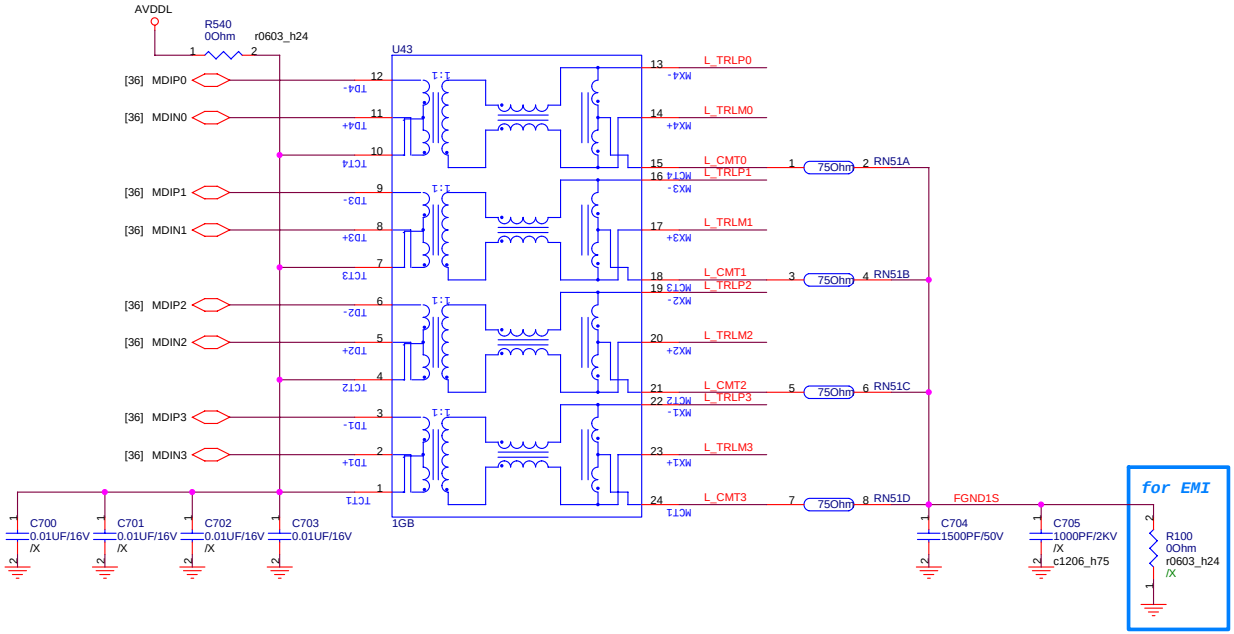

ASUSTeK COMPUTER INC.	Title : RJ45&RJ11		
	Engineer: Kell Huang		
Size: Custom	Project Name: Z96H		Rev: 1.00G
Date: Wednesday, May 17, 2006	Sheet 37 of 60		

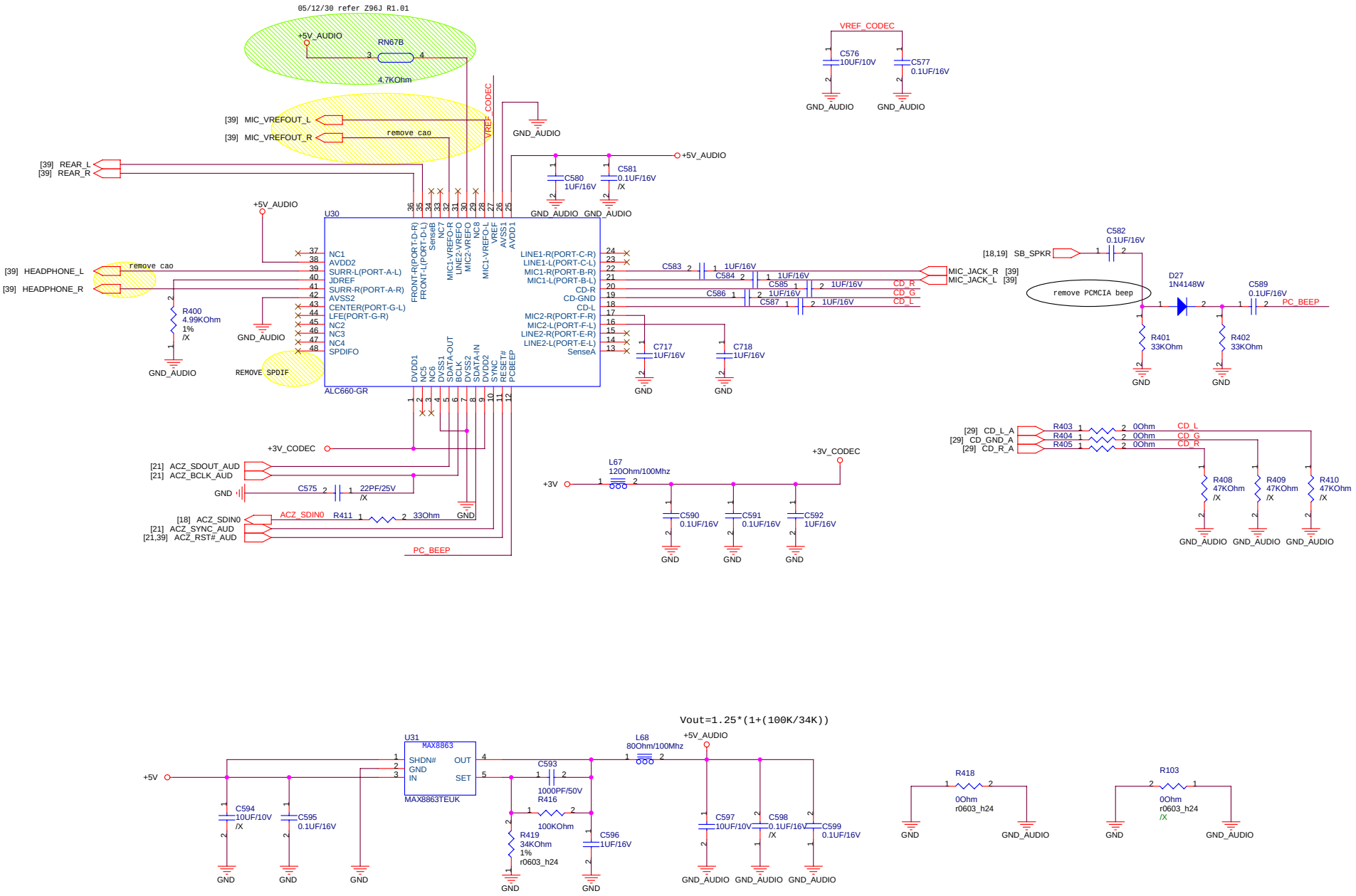

A

ASUS

Title : CODEC-ALC660

ASUSTeK COMPUTER INC. NB1 **Engineer:** *Kell Huang*

Size	Project Name	Rev
Custom	Z96H	1.00G

Date: Wednesday, May 17, 2006 Sheet 38 of 60

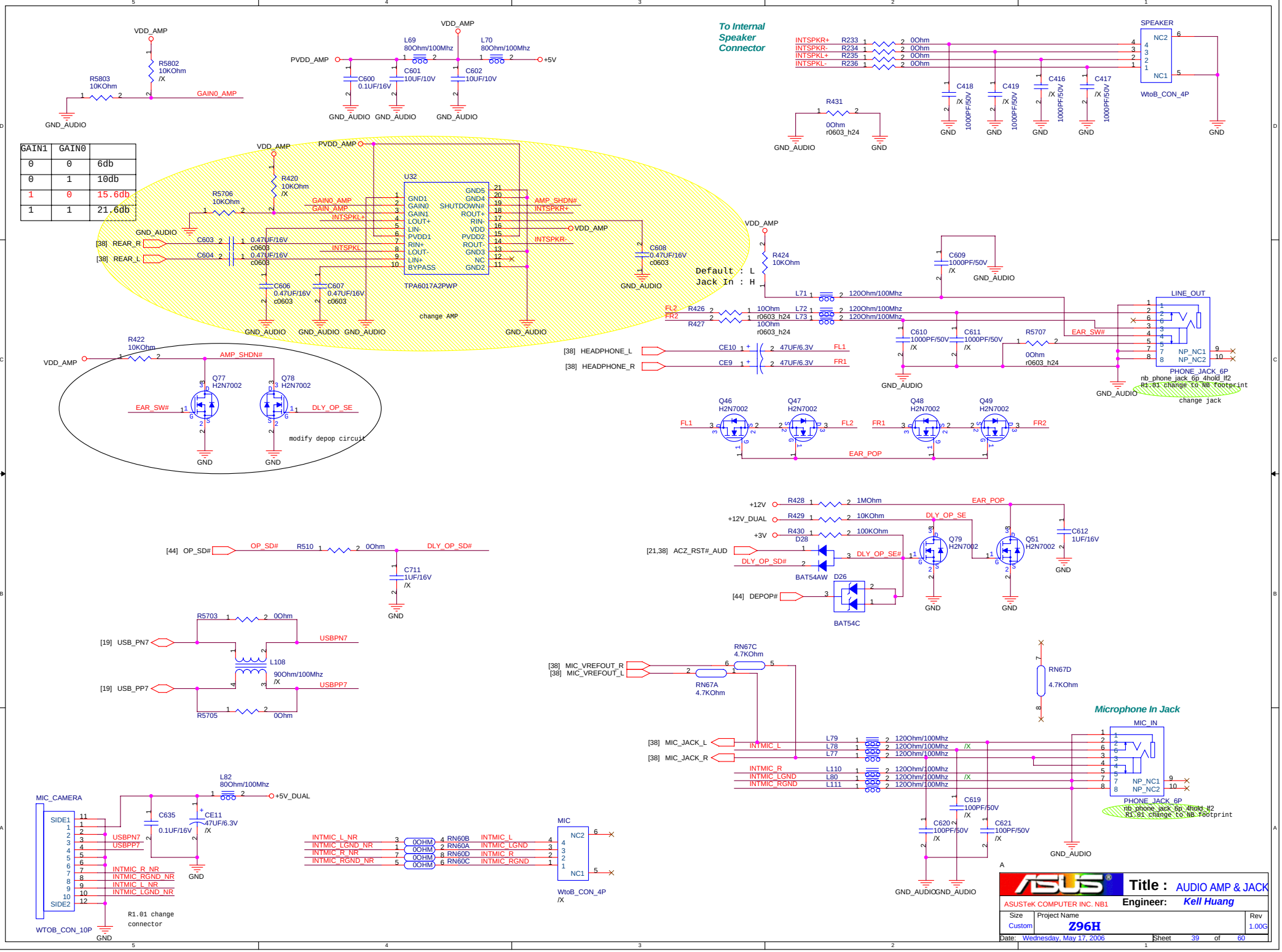

GAIN1	GAIN0	
0	0	6db
0	1	10db
1	0	15.6db
1	1	21.6db

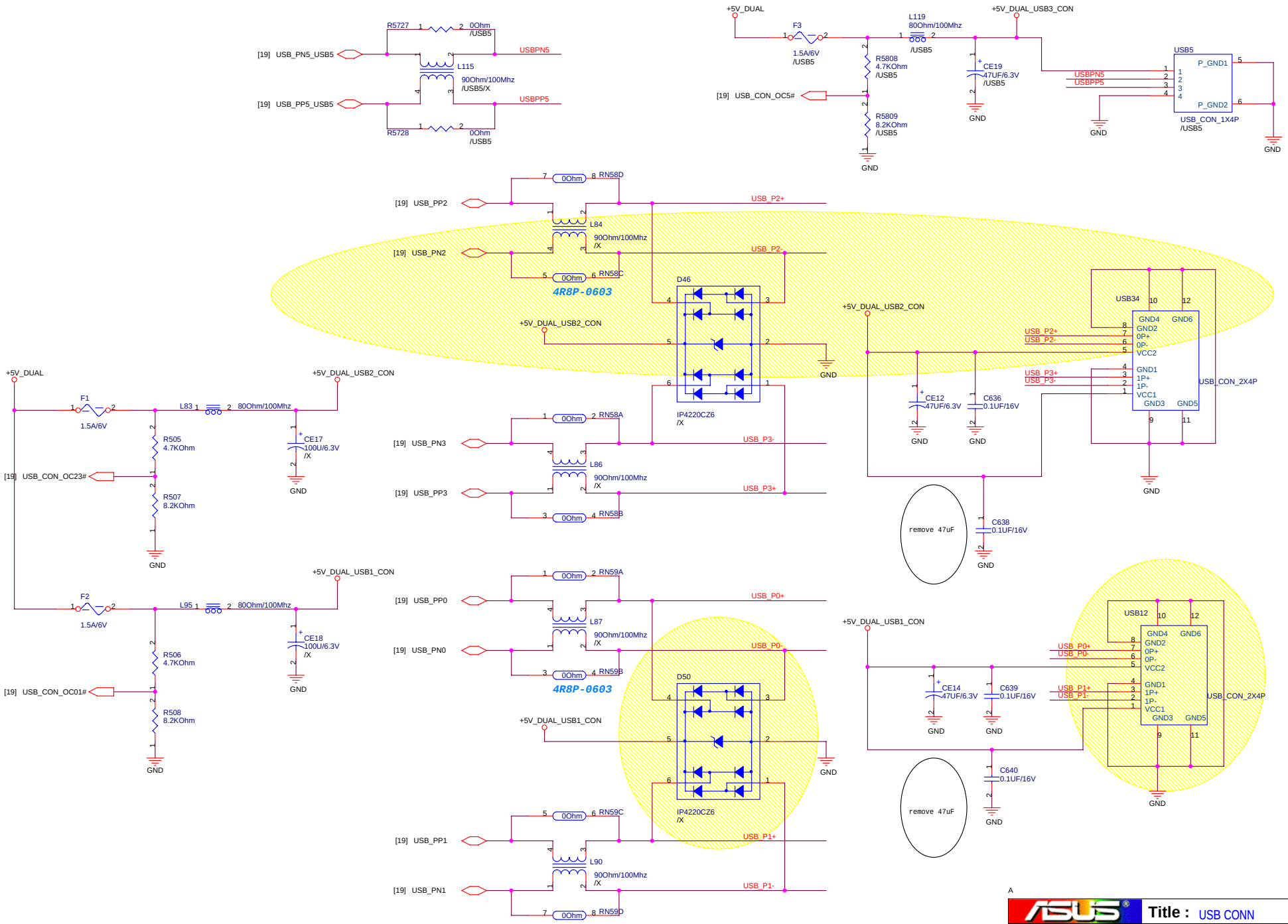

A

ASUS

Title : USB CONN

ASUSTeK COMPUTER INC

Engineer: Kell Huang

Size	Project Name	Rev
Custom	Z96H	1.00G

Date: Wednesday, May 17, 2006 Sheet 40 of 60

For Bluetooth

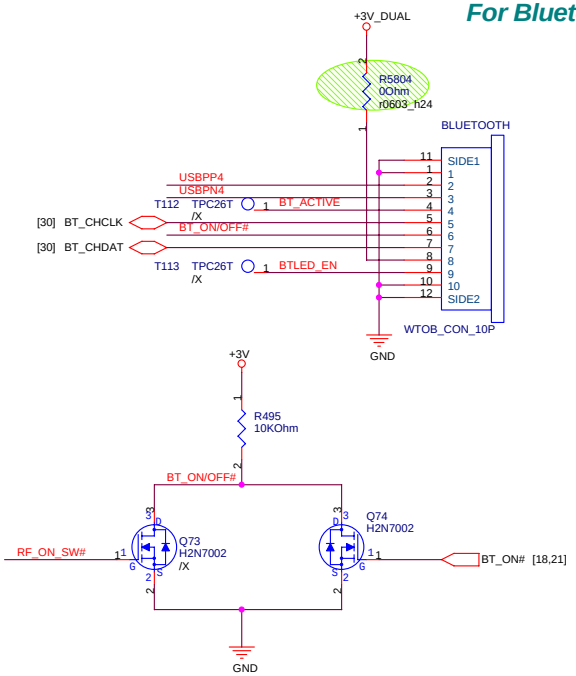

For Side SW

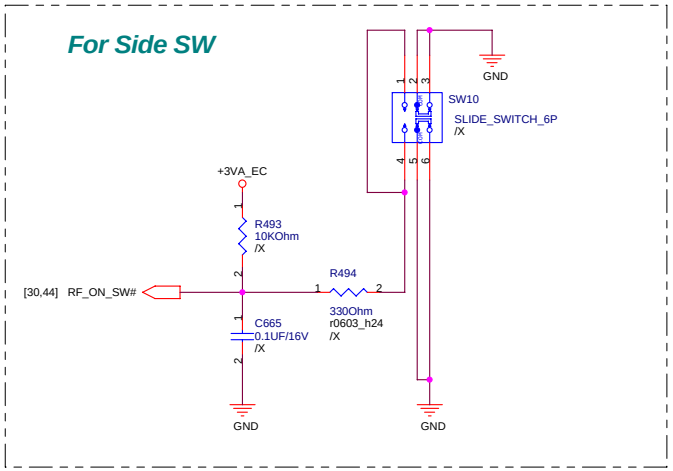

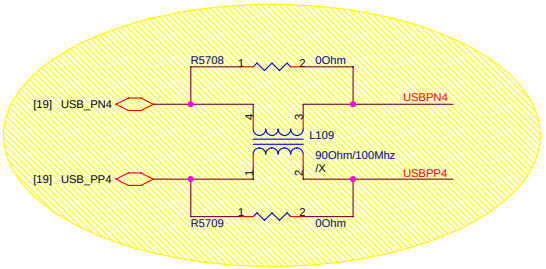

A

ASUS	Title : Blue Tooth	
ASUSTeK COMPUTER INC	Engineer: Kell Huang	
Size: Custom	Project Name: Z96H	Rev: 1.00G
Date: Wednesday, May 17, 2006	Sheet 41 of 60	

For TPM Module

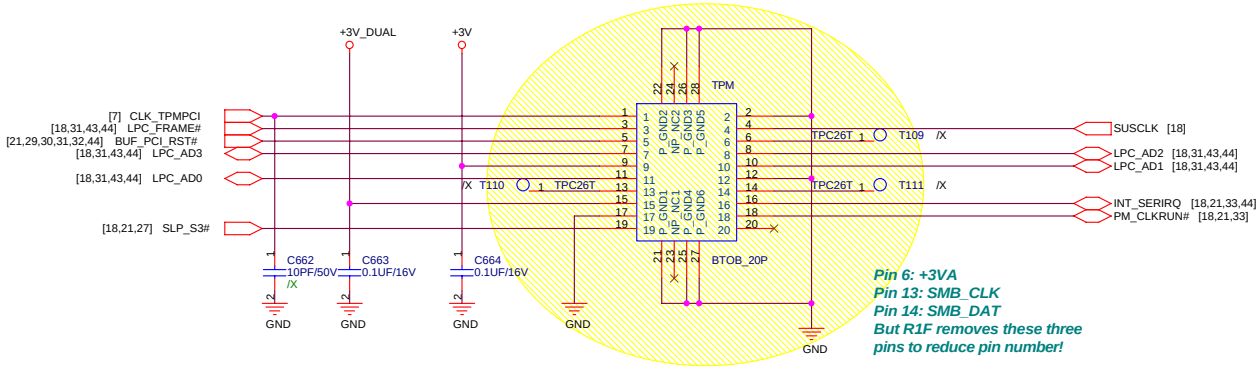

Pin 6: +3VA
Pin 13: SMB_CLK
Pin 14: SMB_DAT
But R1F removes these three pins to reduce pin number!

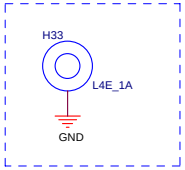

TPM MODULE NUT(3.0mm) *1

ASUSTeK COMPUTER INC	Title : TPM		
	Engineer: Kell Huang		
Size: Custom	Project Name: Z96H		Rev: 1.00G
Date: Wednesday, May 17, 2006	Sheet 42 of 60		

For Debug

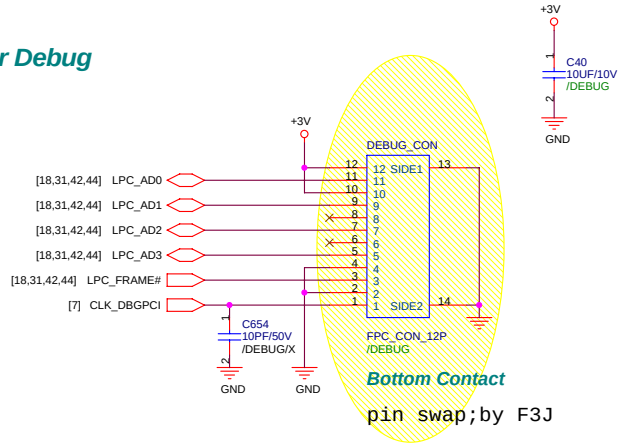

pin swap;by F3J

ASUSTeK COMPUTER INC	Title : Debug CONN.	
	Engineer: Kell Huang	
Size: Custom	Project Name: Z96H	Rev: 1.00G
Date: Wednesday, May 17, 2006	Sheet 43 of 60	

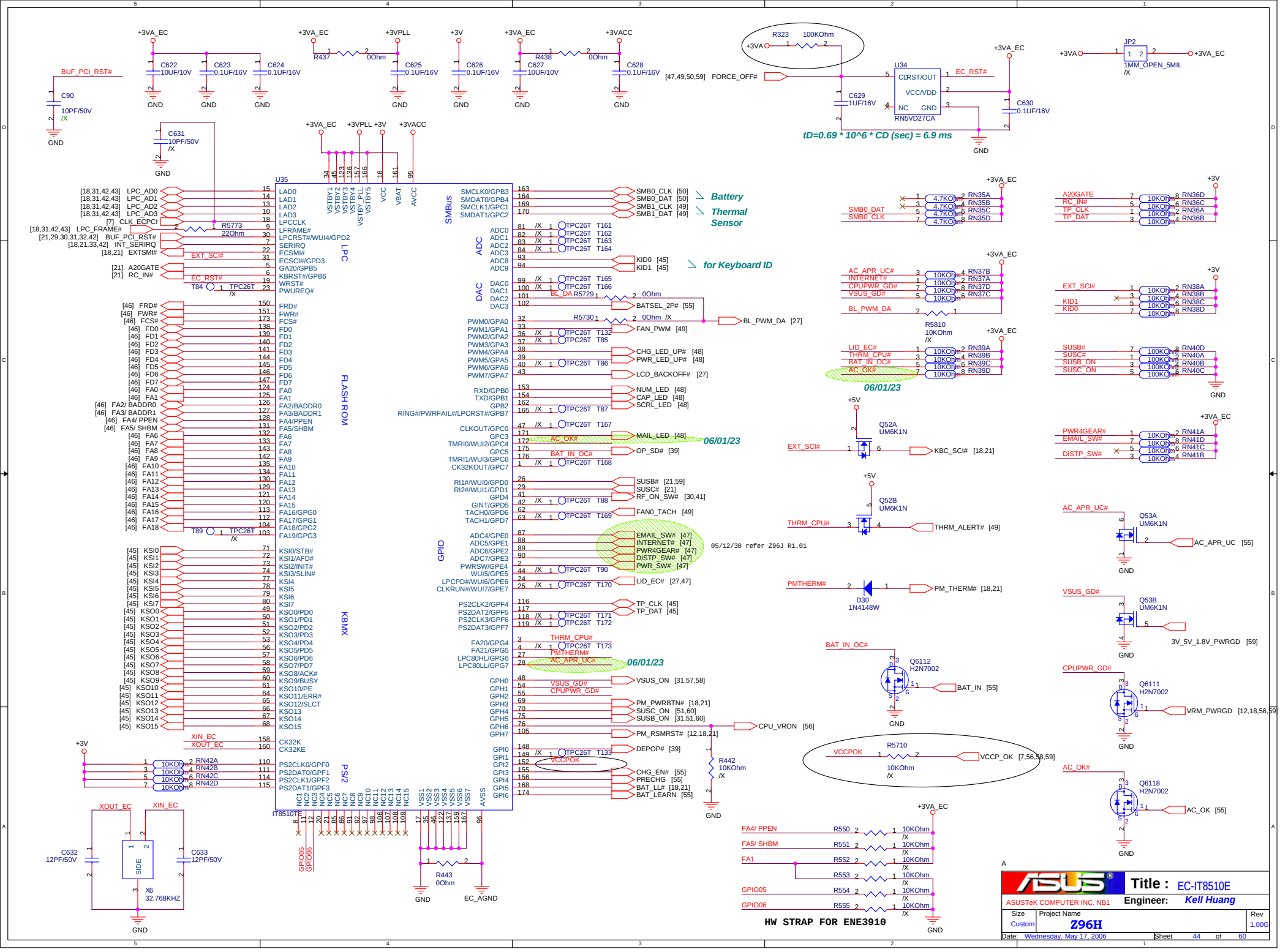
U35
IT8510TE
LPC
FLASH ROM
KBMX
PS/2
SMBus
ADC
DAC
GPIO
Battery
Thermal
Sensor
for Keyboard ID
06/01/23
05/12/30 refer Z96J R1.01
tD=0.69 * 10^6 * CD (sec) = 6.9 ms
HW STRAP FOR ENE3910
Title : EC-IT8510E
ASUSTeK COMPUTER INC. NB1
Engineer: Kell Huang
Size Custom
Project Name Z96H
Rev 1.00G
Date: Wednesday, May 17, 2006
Sheet 44 of 60

For Touch-Pad

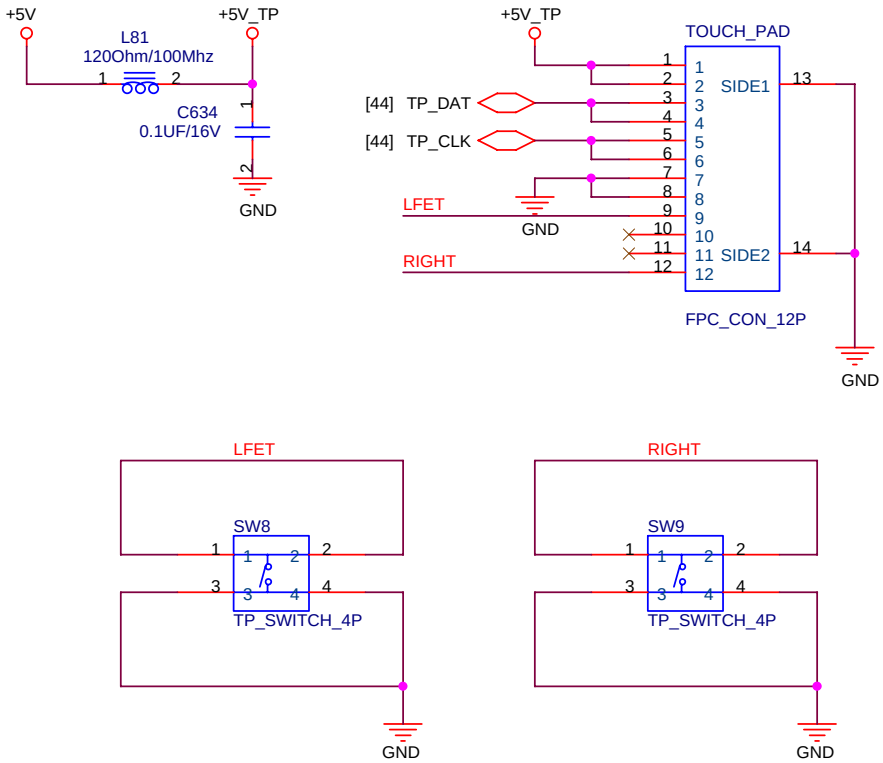

For Keyboard

05/12/29 ESD DIODE PIN SWAPPED

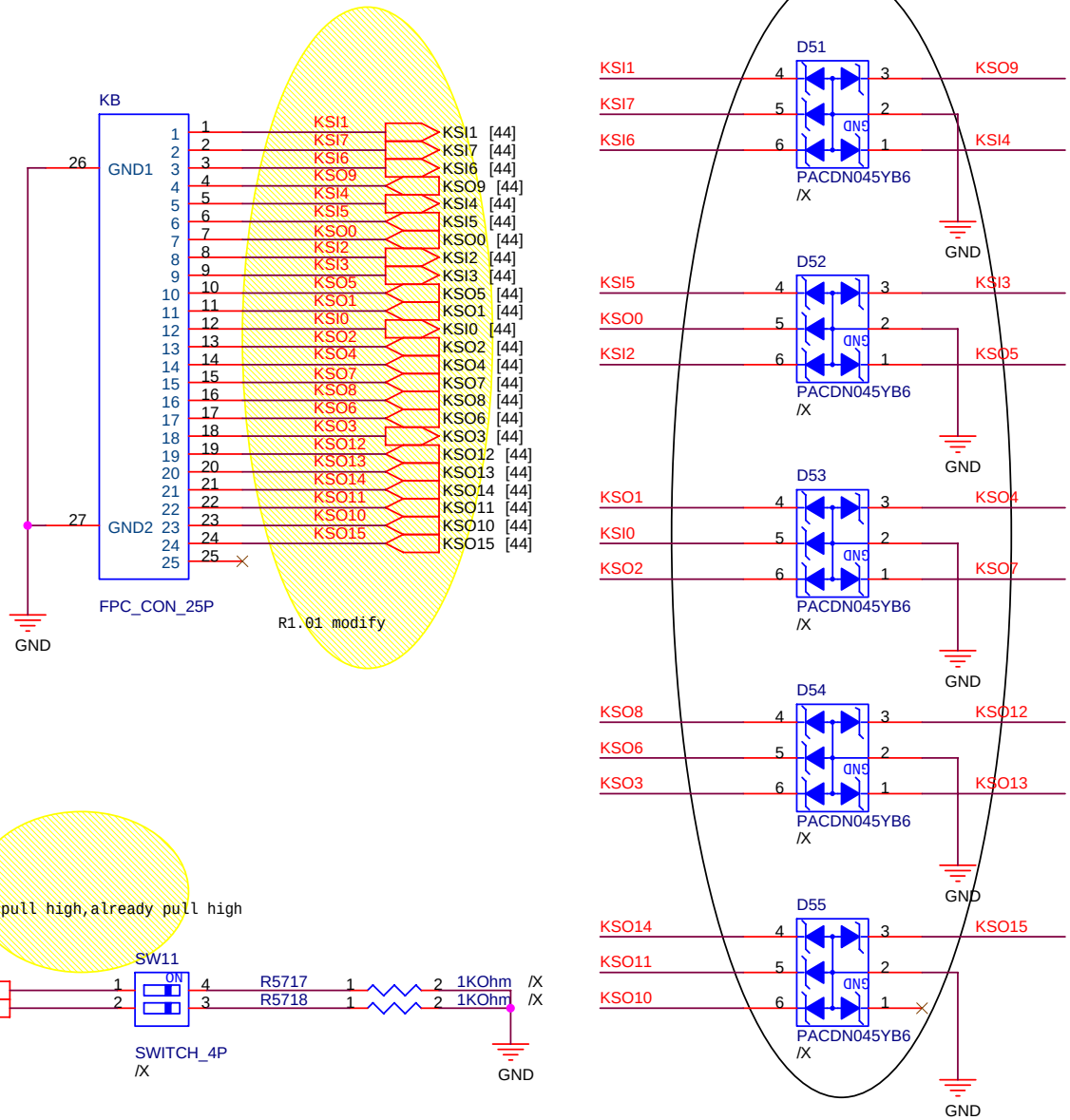

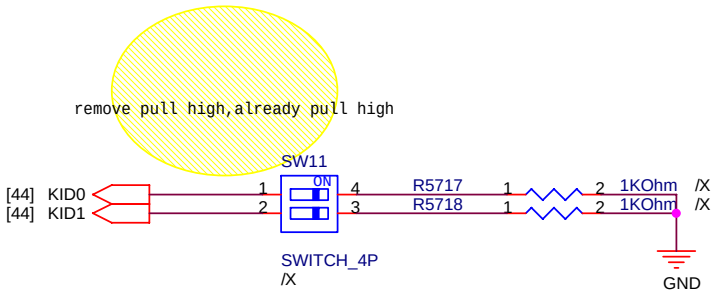

ASUSTeK COMPUTER INC. MB6	Title : Touch Pad & KB	
	Engineer: Kell Huang	
Size A4	Project Name Z96H	Rev 1.00G
Date: Wednesday, May 17, 2006	Sheet 45 of 60	

ISA ROM

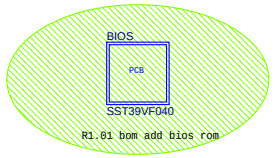

EC Hardware Strapping

FA2/ BADDR0 & FA3/ BADDR1

00: PNPCNG Access Register Pair Are 002Eh and 002Fh

10: PNPCNG Access Register Pair Are 004Eh and 004Fh

01: PNPCNG Access Register Pair Are Determined by EC Domain Registers SWCBALR and SWCBAHR.

11: Reserved

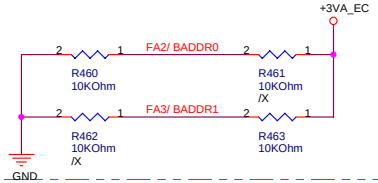

Note: Sampled at VSTBY Power Up Reset

FA4/ PPEN

0: Normal

1: KBS Interface Pins Are Switched to Parallel Port Interface for In-System Programming

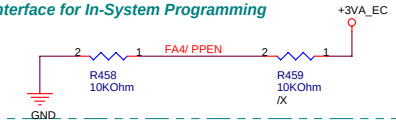

FA5/ SHBM

0: Disable Shared Memory with Host BIOS

1: Enable Shared Memory with Host BIOS

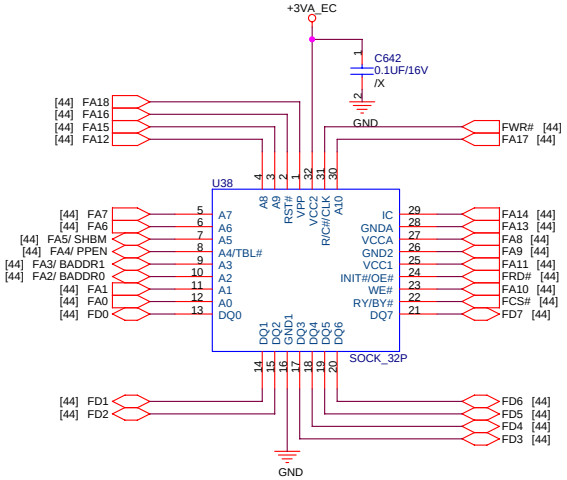

ASUSTeK COMPUTER INC. NB1	Title : ISA ROM	
	Engineer: Kell Huang	
Size: Custom	Project Name: Z96H	Rev: 1.00G
Date: Wednesday, May 17, 2006	Sheet 46 of 60	

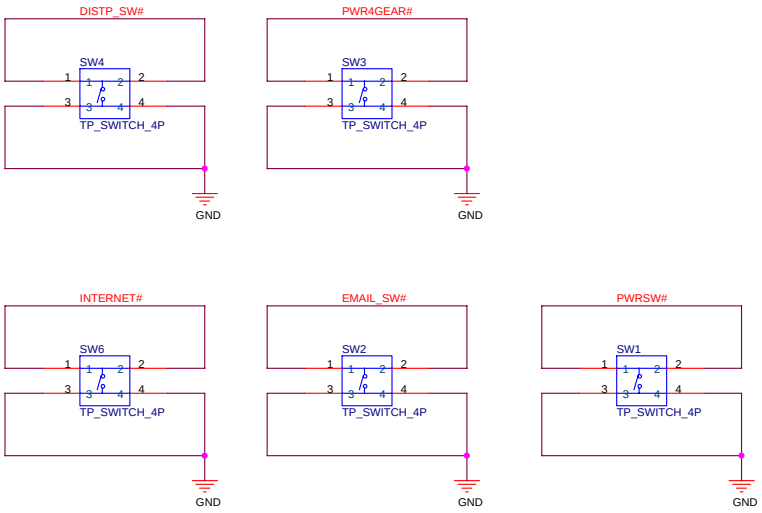

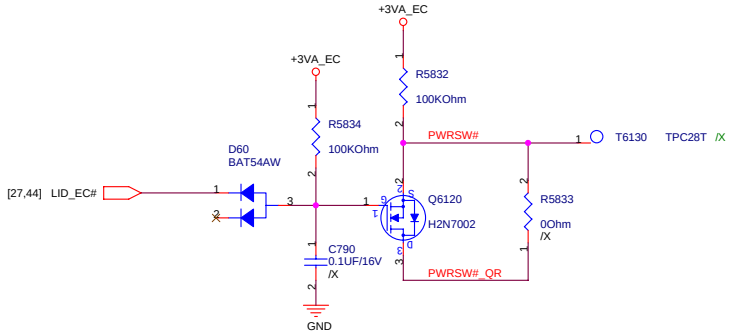

SHUT_DOWN#

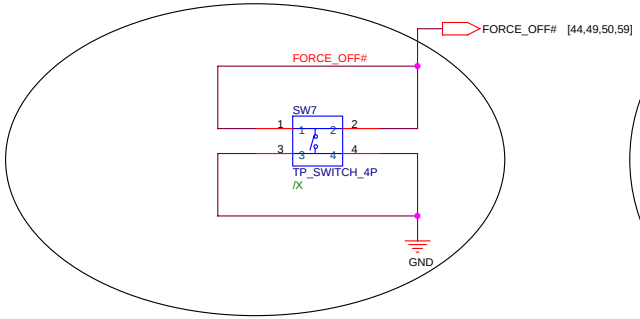

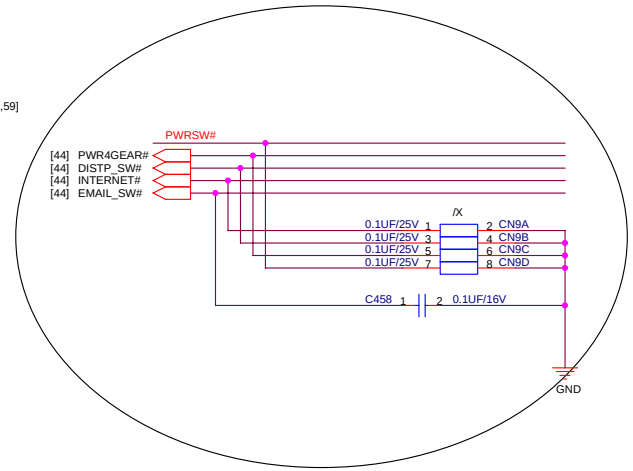

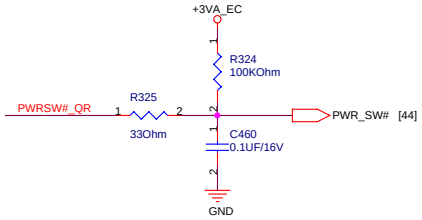

A

ASUSTeK COMPUTER INC

Title : SWITCH

Engineer: *Kell Huang*

Size	Project Name	Rev
Custom	Z96H	1.00G

Date: Wednesday, May 17, 2006 Sheet 47 of 60

For LED

For SATA/IDE LED

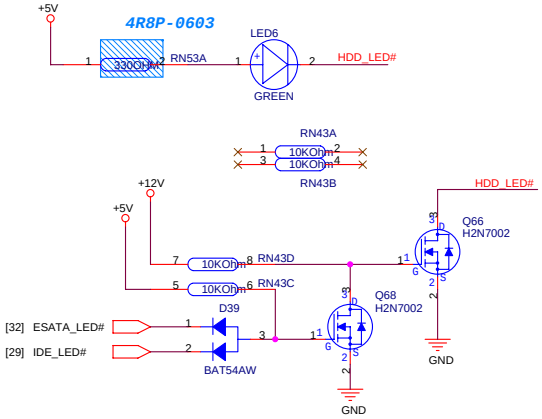

for Num Lock

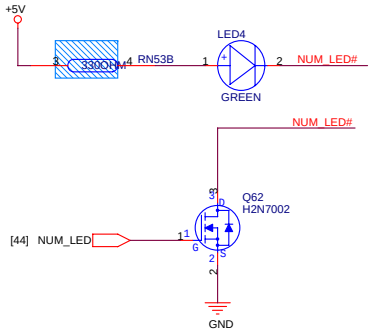

for Cap. Lock

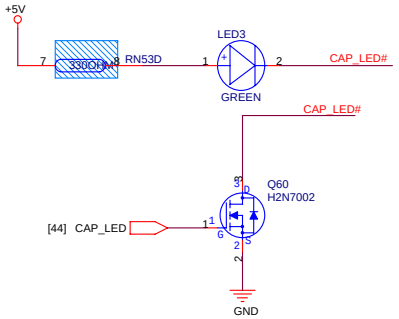

for Scroll Lock

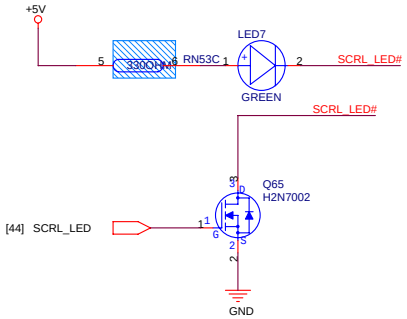

For POWER LED

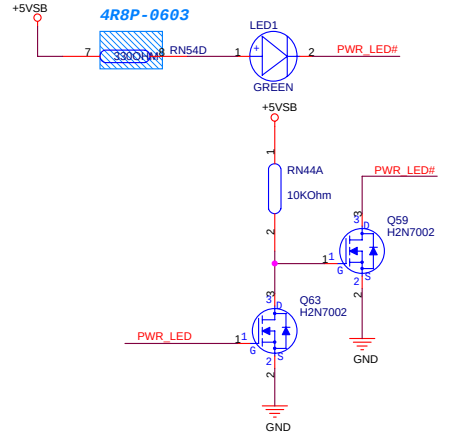

For BATTERY LED

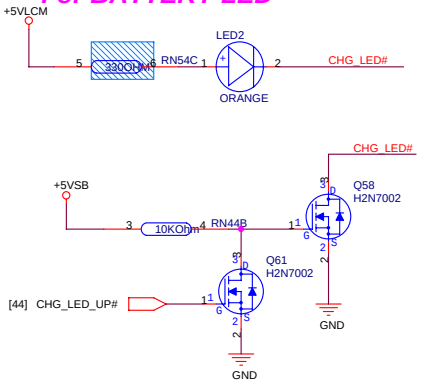

for email

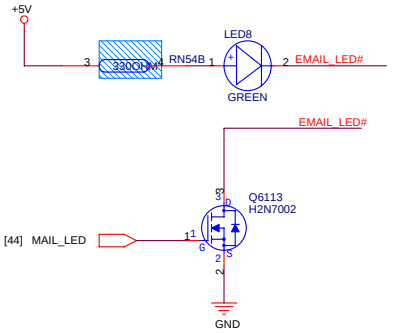

For WireLess LED

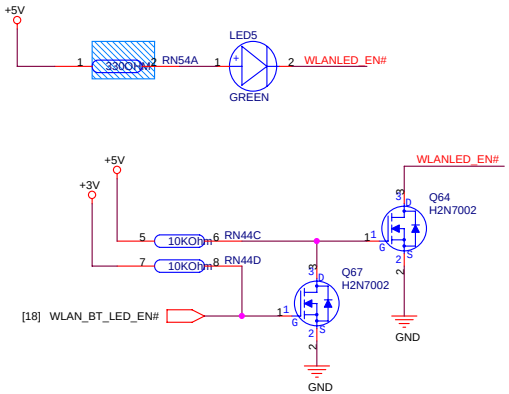

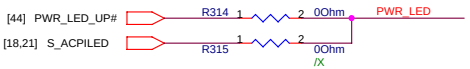

ASUS	Title : LED	
ASUSTeK COMPUTER INC	Engineer: Kell Huang	
Size: Custom	Project Name: Z96H	Rev: 1.00G
Date: Wednesday, May 17, 2006	Sheet 48 of 60	

Thermal Sensor

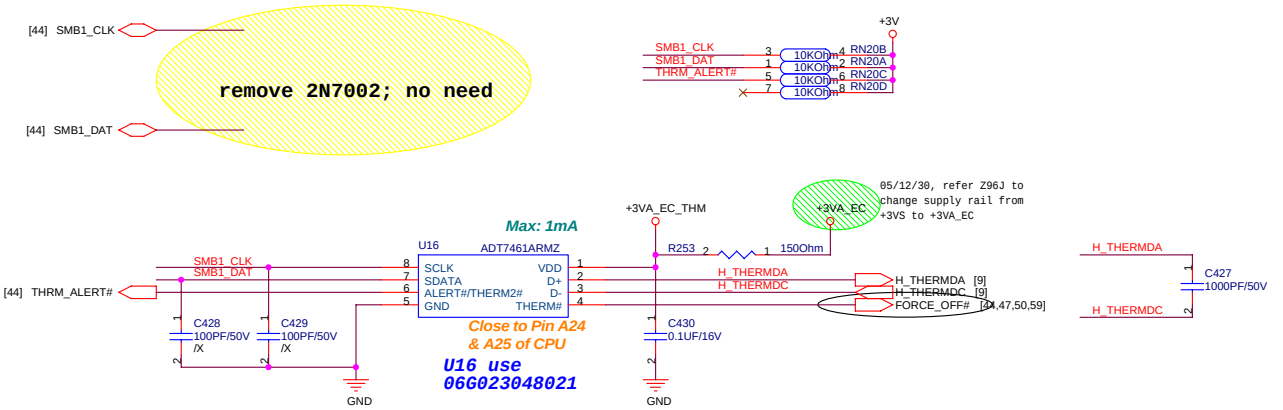

Route H_THERMDA and H_THERMDC on the same layer

----------OTHER SIGNALS
15 mils
==========GND
10 mils
=========H_THERMDA(10 mils)
10 mils
=========H_THERMDC(10 mils)
10 mils
=========GND
15 mils
----------OTHER SIGNALS

Avoid FSB,Power

DC FAN Control

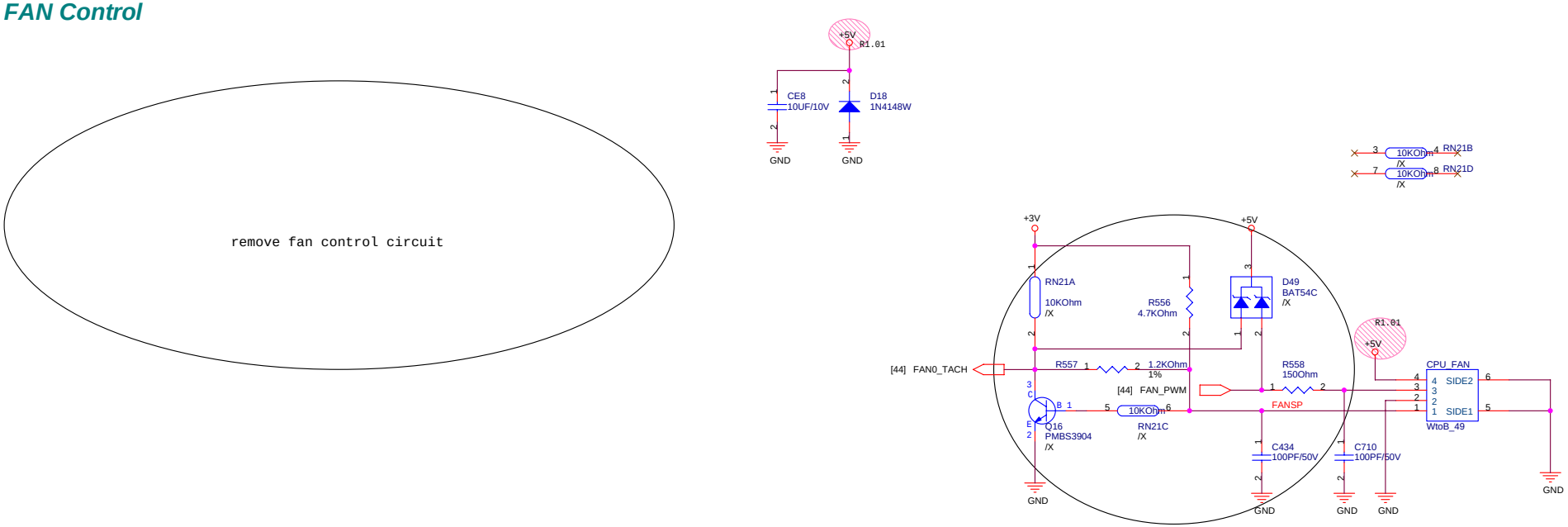

CPU FAN will be forced on:
1) Thermal Sensor Over-temperture
2) WATCHDOG asserted by EC

ASUSTeK COMPUTER INC.	Title : THER SENSOR & FAN	
	Engineer: Kell Huang	
Size: Custom	Project Name: Z96H	Rev: 1.00G
Date: Wednesday, May 17, 2006	Sheet 49 of 60	

DC IN

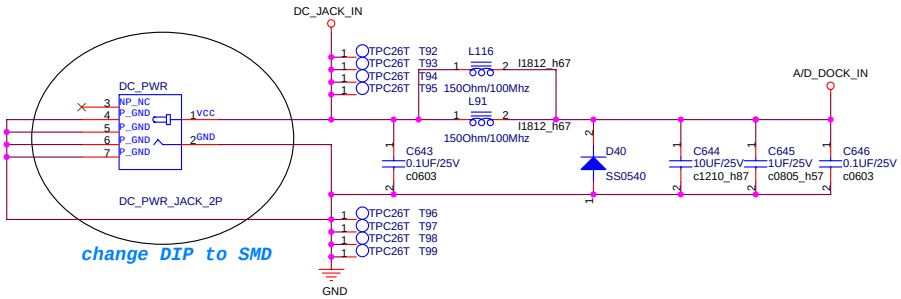

change DIP to SMD

remove AC DC detect; no need

BAT IN

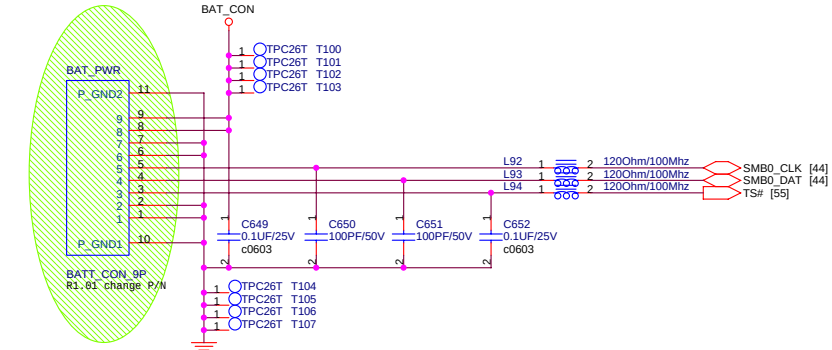

change DIP to SMD

Without Battery & Pull out Adapter

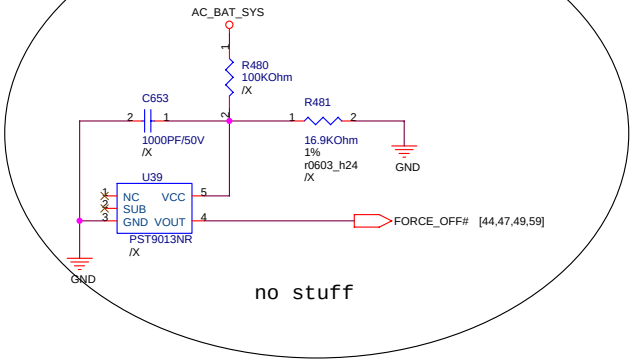

no stuff

ASUS	Title :	DC & BAT IN
ASUSTeK COMPUTER INC. NB1	Engineer:	Kell Huang
Size: Custom	Project Name: Z96H	Rev: 1.00G
Date: Wednesday, May 17, 2006	Sheet 50 of 60	

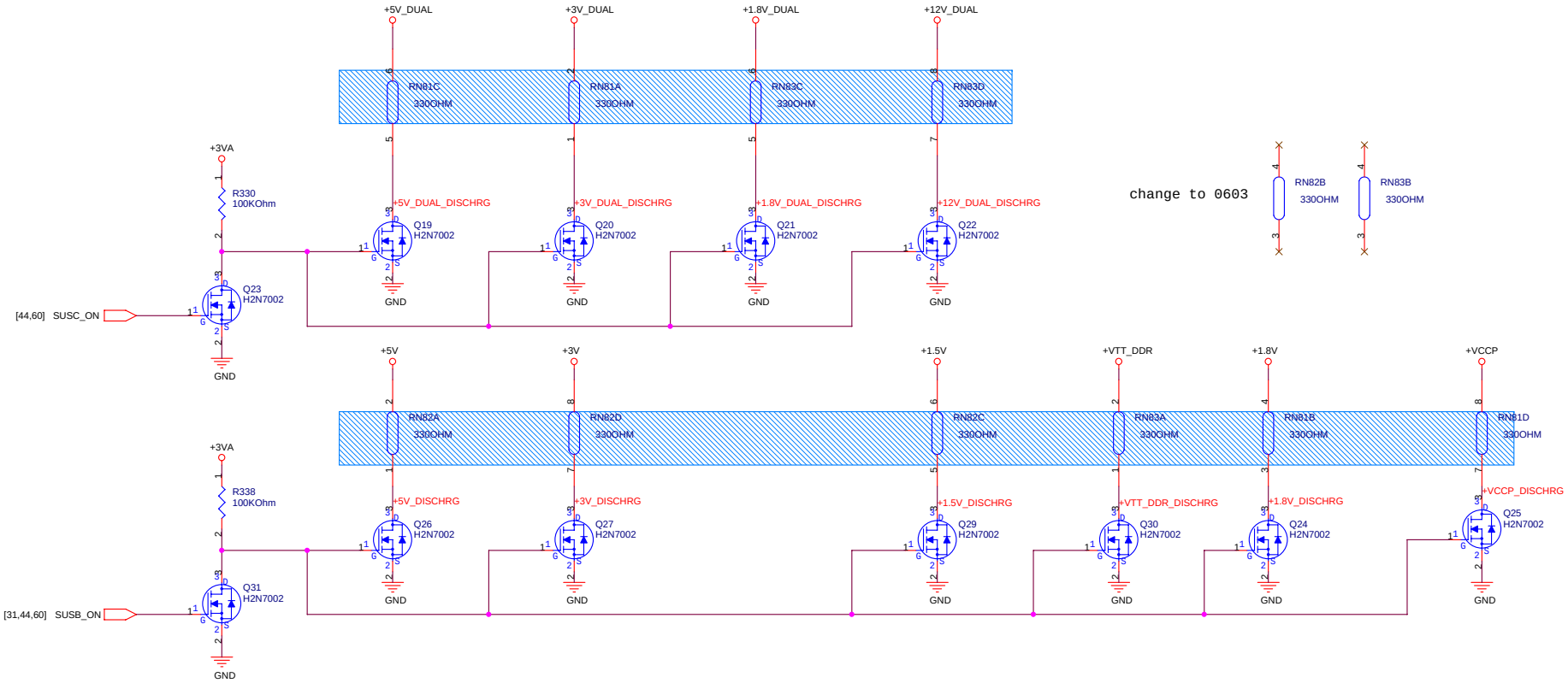

A

ASUS	Title : DISCHARGE	
ASUSTeK COMPUTER INC. NB1	Engineer: Kell Huang	
Size: Custom	Project Name: Z96H	Rev: 1.00G
Date: Wednesday, May 17, 2006	Sheet 51 of 60	

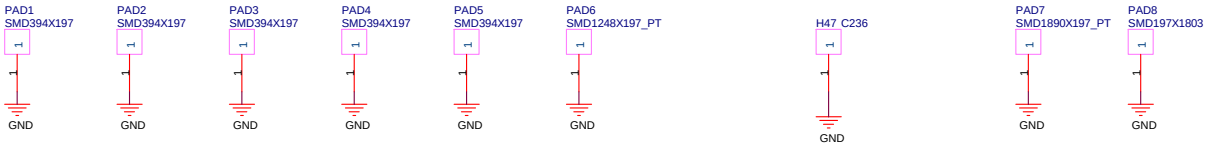

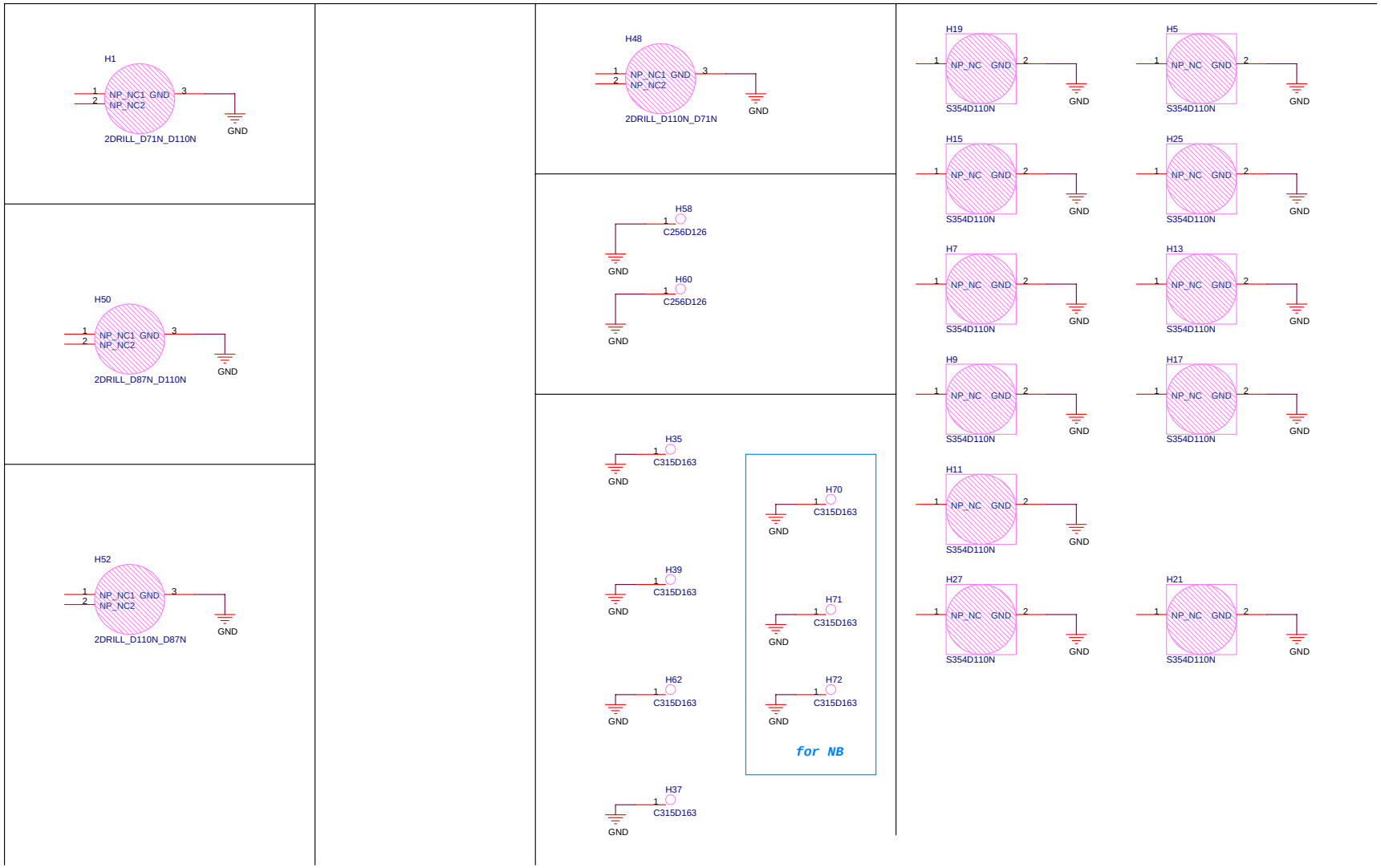

ASUS	Title : SREW HOLE	
ASUSTeK COMPUTER INC	Engineer: Kell Huang	
Size: Custom	Project Name: Z96H	Rev: 1.00G
Date: Wednesday, May 17, 2006	Sheet 52 of 60	

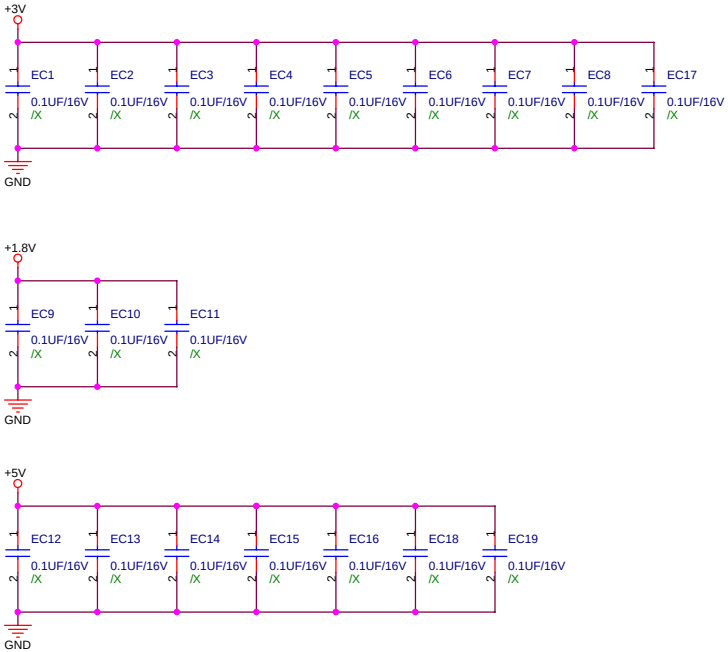

ASUSTeK COMPUTER INC.	Title : EMI	
	Engineer: *Kell Huang*	
Size A3	Project Name Z96H	Rev 1.00G
Date: Wednesday, May 17, 2006	Sheet 53 of 60	

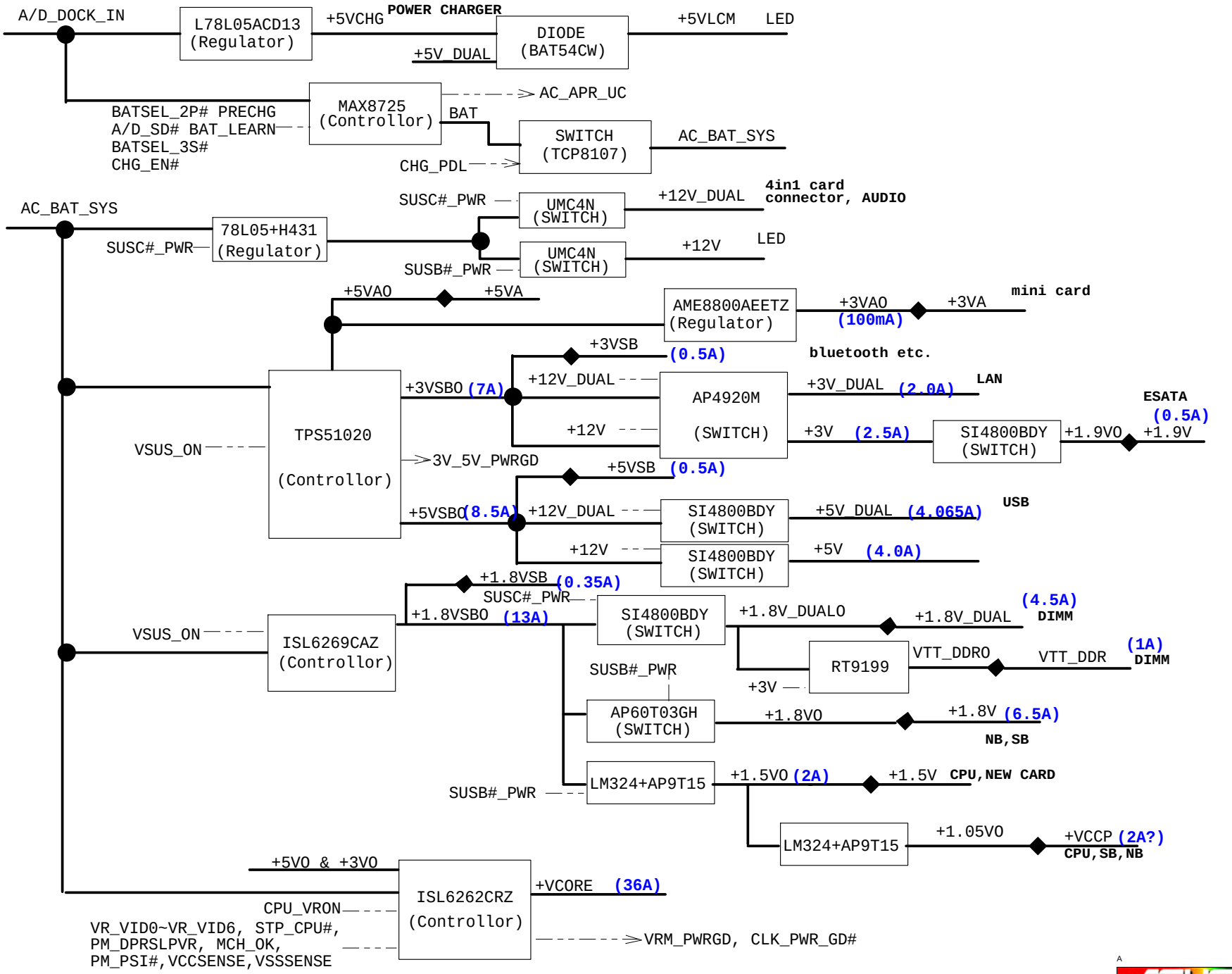

ASUSTeK COMPUTER INC	Title : POWER_FLOWCHART	Engineer:
Size: Custom	Project Name: Z96H	Rev: 1.00G
Date: Wednesday, May 17, 2006	Sheet 54 of 60	

POWER PATH & BAT_LEARN

AC_IN Threshold 2.048Vmax A/D_DOCK_IN
> 17.44V active

Adapter Iin(max) = [0.075V/Rsense(ADin)]*[VCLS/VREF]
Rsense(ADin)=0.02 ohm
VCLS= 3.685V
=> Iin(max)=3.27A
=> Constant Power = 19 * 3.27 = 62.13W
=> R5710=20K,R5715=137K

Adapter Iin(max) = [0.075V/Rsense(ADin)]*[VCLS/VREF]
VCLS= 2.865V
=> Iin(max)=2.544A
=> Constant Power = 19 * 2.44 = 48.336W
=> R5710=20K,R5715=42.2K

Charge Current Ichg = [0.075V/Rsense(CHG)]*[VICTL/3.6V]
Rsense(CHG)= 25m Ohm
VICTL= 3V => Ichg = 2.5A
VICTL= 1.68V => Ichg = 1.4A

Vbatt = Cell * { Vref +[(VCTL- 1.8V) / 9.52] }
VCTL= 1.588V
=> Vbatt = 4.2V

VICTL< 0.8V or DCIN < 7V -->Charger Disable

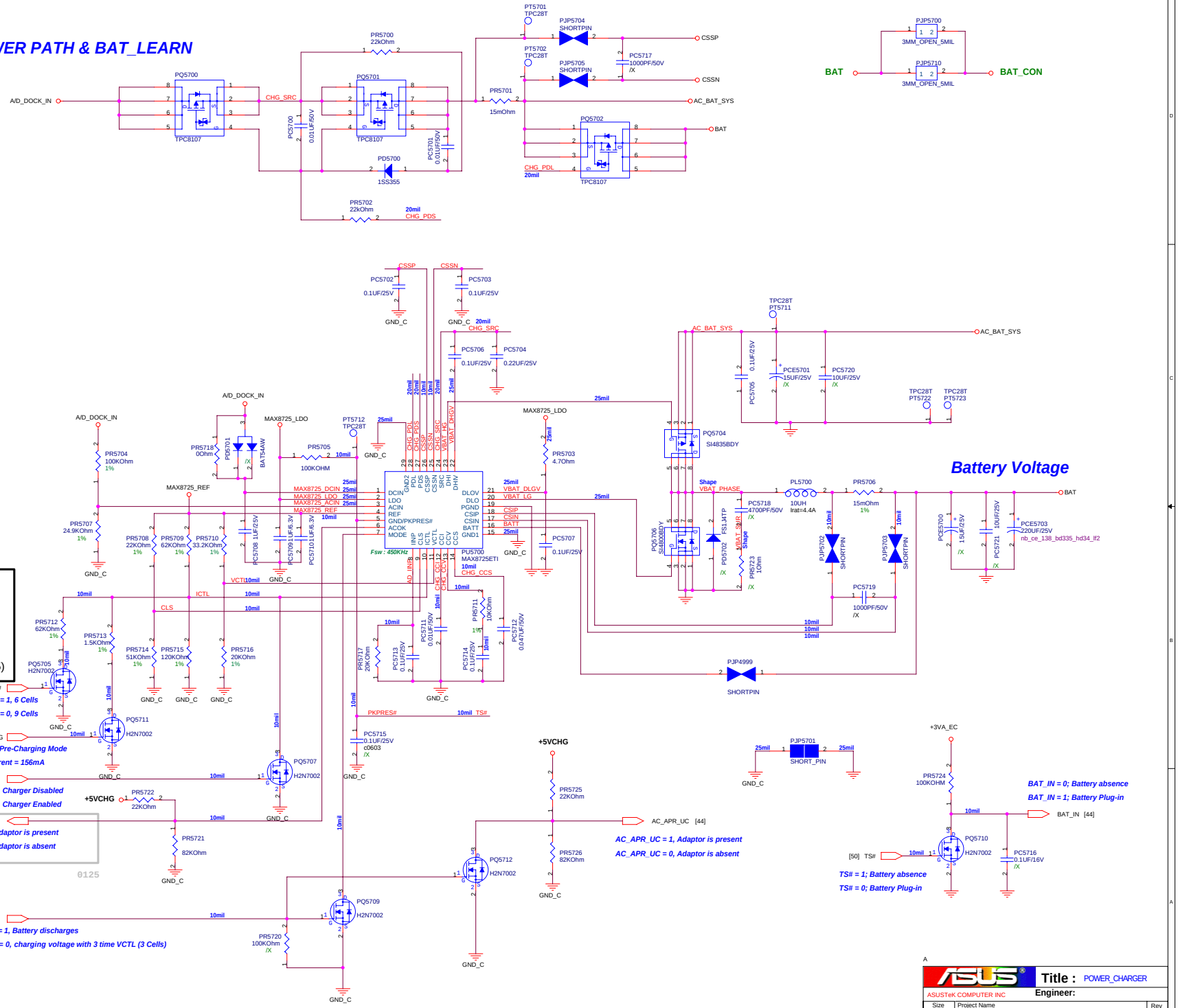

MODE (Pin7)	Battery
High (>2.8V)	4-Cell
Low (<0.8V)	3-Cell
High Impedance (1.6V<Vmoce<2V)	Battery Learn

MAX8725_REF : 4.2235V
MAX8725_LDO : 5.4V

Battery Charging Voltage :
+V_BAT= 4 x [4.2235+(Vvctl-1.8)/9.52]

Battery Charging Current :
Icharge=(0.075/PR5706) x (Victl/3.6))

Input Adaptor Max. Current Limit :
Ilimit_current=(0.075/PR5701) x (Vcls/4.2235)

Pre-Charging Mode :

Precharging current = 163.9mA
Victl = 0.098V

Battery Cell Selection :

BATSEL_2P# = 1, 6 Cells; Victl = 1.678V
=> Icharge = 2.331A
BATSEL_2P# = 0, 9 Cells; Victl = 2.785V
=> Icharge = 3.868A

BATSEL_2P# = 1, 6 Cells
BATSEL_2P# = 0, 9 Cells

PRECHG = 1, Pre-Charging Mode
Charging Current = 156mA

CHG_EN# = 1, Charger Disabled
CHG_EN# = 0, Charger Enabled

AC_OK = 1, Adaptor is present
AC_OK = 0, Adaptor is absent

A/D_SD#=1. Enable charger
A/D_SD#=0. Disable charger

BAT_LEARN = 1, Battery discharges
BAT_LEARN = 0, charging voltage with 3 time VCTL (3 Cells)

AC_APR_UC = 1, Adaptor is present
AC_APR_UC = 0, Adaptor is absent

BAT_IN = 0; Battery absence
BAT_IN = 1; Battery Plug-in

TS# = 1; Battery absence
TS# = 0; Battery Plug-in

Battery Voltage

Title :	POWER_CHARGER		
ASUSTeK COMPUTER INC	Engineer:		
Size C	Project Name Z96H		Rev 1.00G
Date: Wednesday, May 17, 2006	Sheet 55 of 60		

	DPRSLPVR	DPRSTP#	PSI#	Phase Operation Modes	Expected CPU mode
Intel IMVP 6 Compliant Logic	0	1	1	2-phase CCM	active mode
	0	1	0	1-phase CCM	active mode
	1	0	1	1-phase diode emulation	deeper sleep mode
	1	0	0	1-phase diode emulation	deeper sleep mode

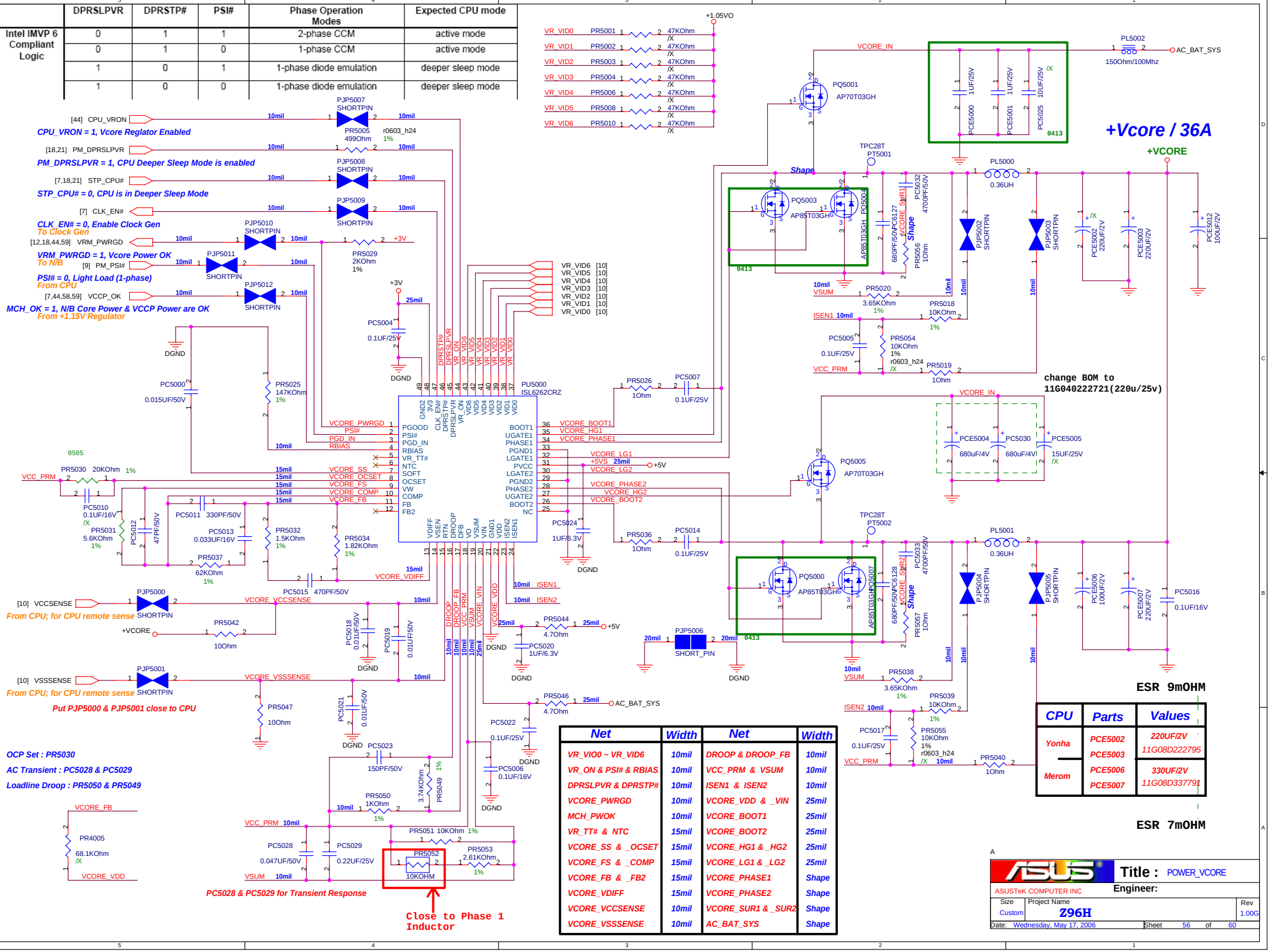

CPU	Parts	Values
Yonha	PCE5002	220UF/2V
	PCE5003	11G08D222795
Merom	PCE5006	330UF/2V
	PCE5007	11G08D337791

Net	Width	Net	Width
VR_VIO0 ~ VR_VID6	10mil	DROOP & DROOP_FB	10mil
VR_ON & PSI# & RBIAS	10mil	VCC_PRM & VSUM	10mil
DPRSLPVR & DPRSTP#	10mil	ISEN1 & ISEN2	10mil
VCORE_PWRGD	10mil	VCORE_VDD & _VIN	25mil
MCH_PWOK	10mil	VCORE_BOOT1	25mil
VR_TT# & NTC	15mil	VCORE_BOOT2	25mil
VCORE_SS & _OCSET	15mil	VCORE_HG1 & _HG2	25mil
VCORE_FS & _COMP	15mil	VCORE_LG1 & _LG2	25mil
VCORE_FB & _FB2	15mil	VCORE_PHASE1	Shape
VCORE_VDIFF	15mil	VCORE_PHASE2	Shape
VCORE_VCCSENSE	10mil	VCORE_SUR1 & _SUR2	Shape
VCORE_VSSSENSE	10mil	AC_BAT_SYS	Shape

A

ASUS

Title : POWER_VCORE

ASUSTeK COMPUTER INC

Engineer:

Size	Project Name	Rev
Custom	Z96H	1.00G

Date: Wednesday, May 17, 2006 Sheet 56 of 60

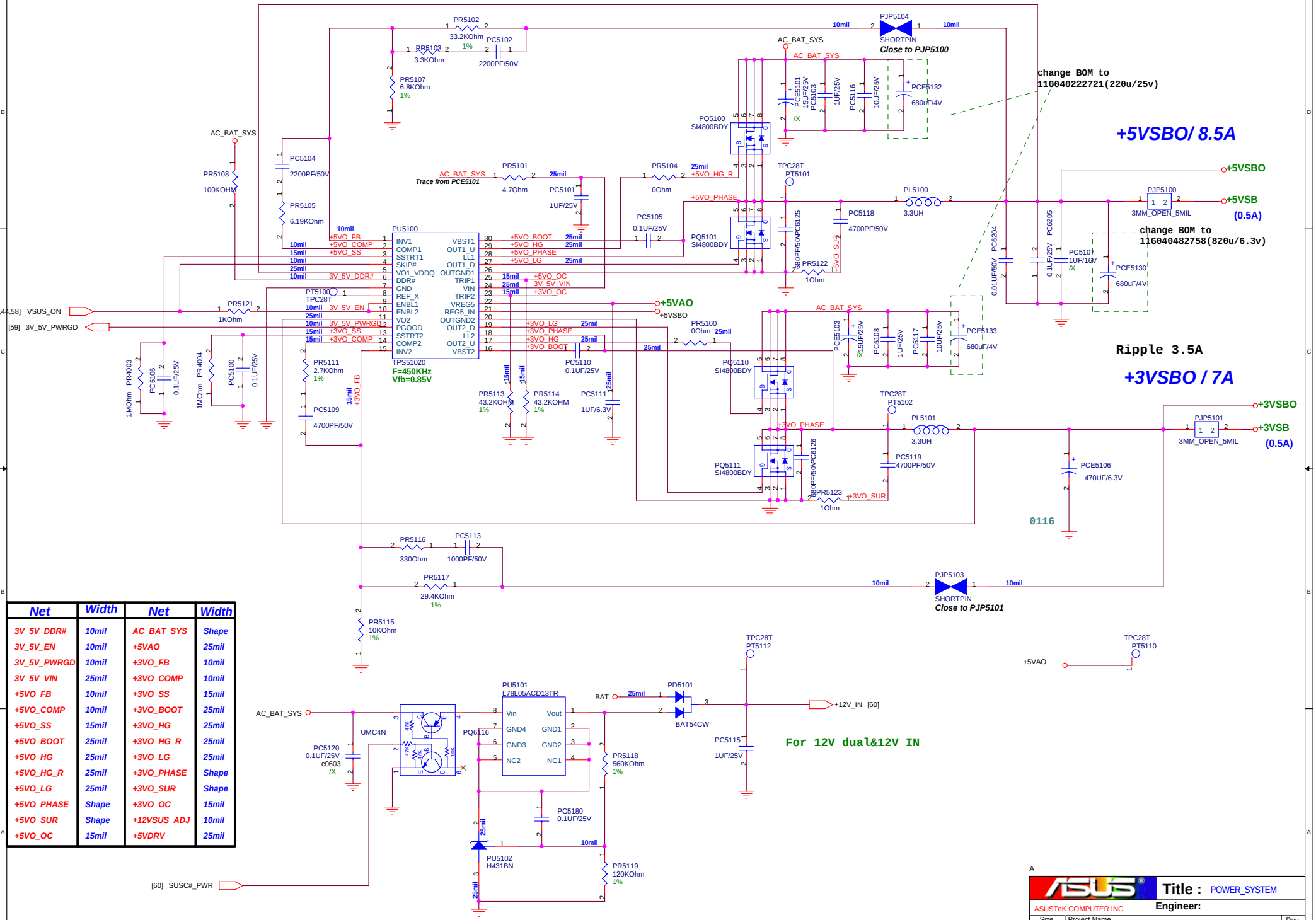

Net	Width	Net	Width
3V_5V_DDR#	10mil	AC_BAT_SYS	Shape
3V_5V_EN	10mil	+5VAO	25mil
3V_5V_PWRGD	10mil	+3VO_FB	10mil
3V_5V_VIN	25mil	+3VO_COMP	10mil
+5VO_FB	10mil	+3VO_SS	15mil
+5VO_COMP	10mil	+3VO_BOOT	25mil
+5VO_SS	15mil	+3VO_HG	25mil
+5VO_BOOT	25mil	+3VO_HG_R	25mil
+5VO_HG	25mil	+3VO_LG	25mil
+5VO_HG_R	25mil	+3VO_PHASE	Shape
+5VO_LG	25mil	+3VO_SUR	Shape
+5VO_PHASE	Shape	+3VO_OC	15mil
+5VO_SUR	Shape	+12VSUS_ADJ	10mil
+5VO_OC	15mil	+5VDRV	25mil

ASUSTeK COMPUTER INC

Title : POWER_SYSTEM

Engineer:

Size	Project Name	Rev
Custom	Z96H	1.00G

Date: Wednesday, May 17, 2006 Sheet 57 of 60

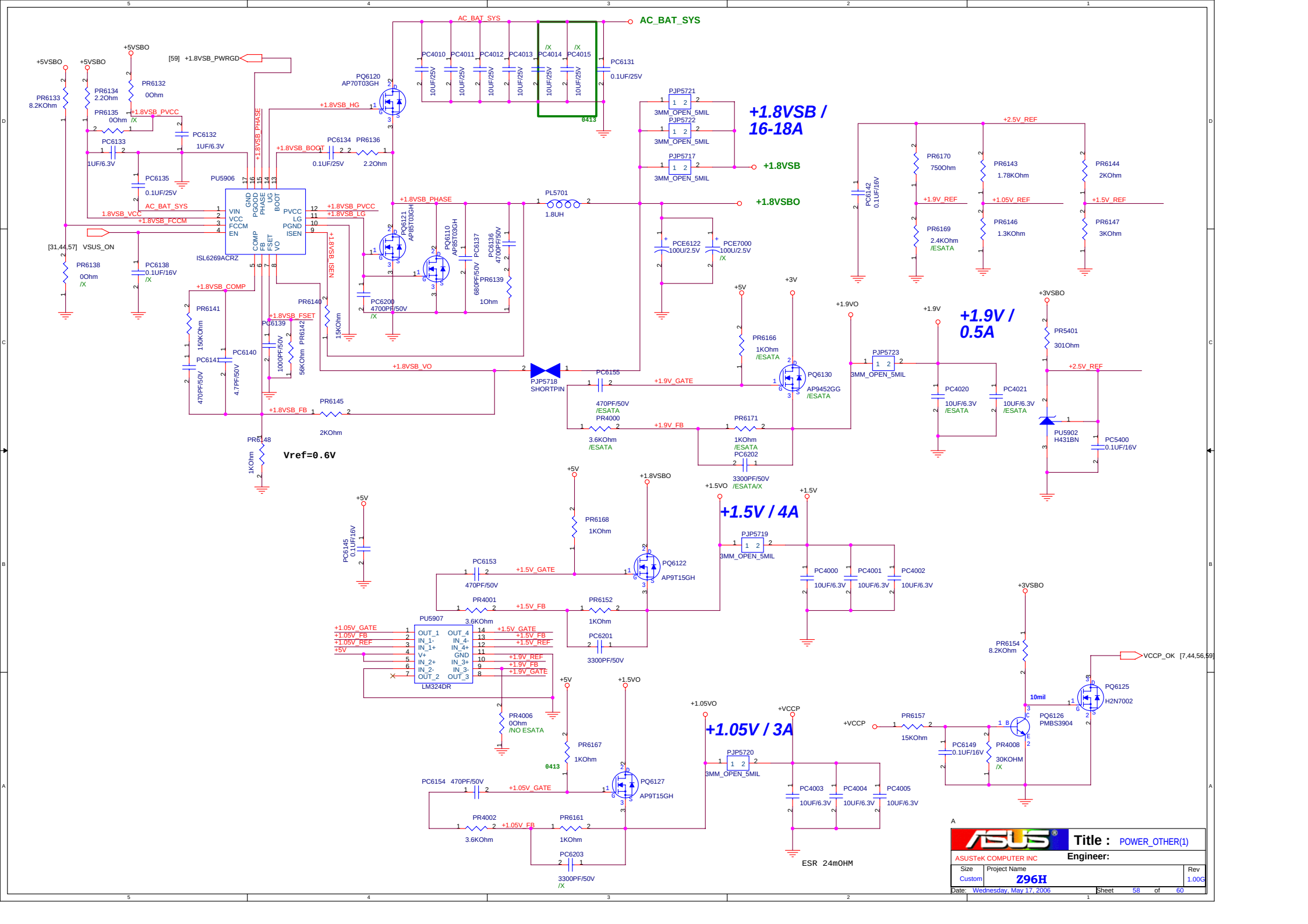
AC_BAT_SYS
+1.8VSB / 16-18A
+1.8VSB
+1.8VSBO
+1.9V / 0.5A
+1.5V / 4A
+1.05V / 3A
ISL6269ACRZ
PU5906
LM324DR
PU5907
Vref=0.6V
ESR 24mOHM
Title : POWER_OTHER(1)
ASUSTeK COMPUTER INC
Engineer:
Size Custom
Project Name Z96H
Rev 1.00G
Date: Wednesday, May 17, 2006
Sheet 58 of 60

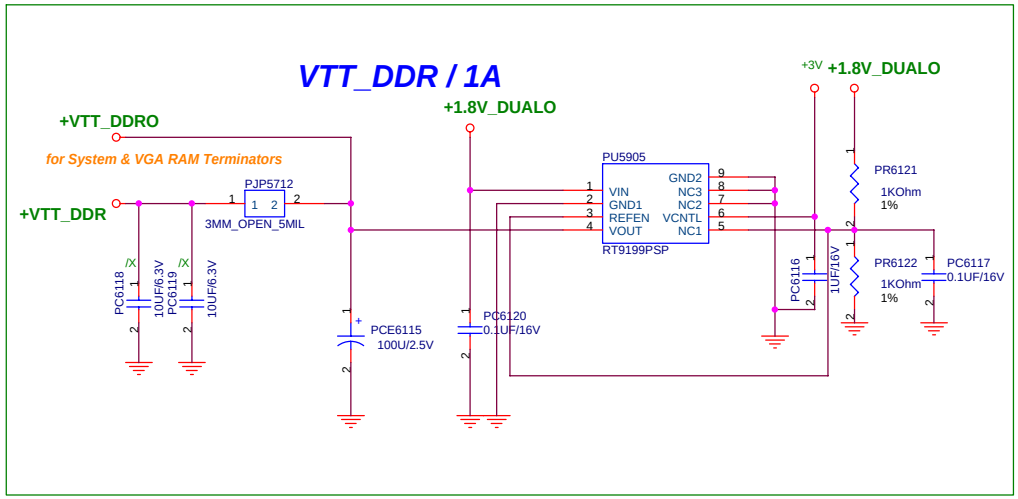

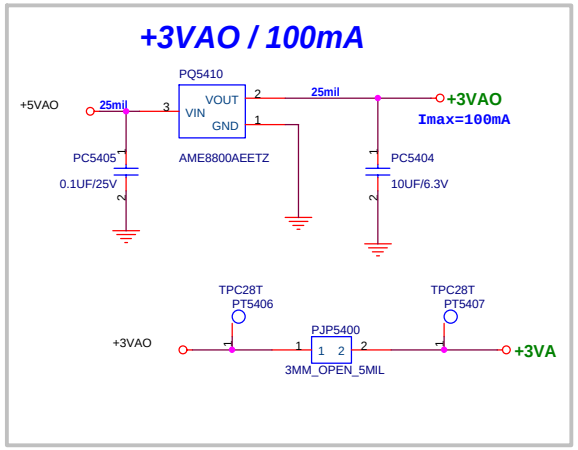

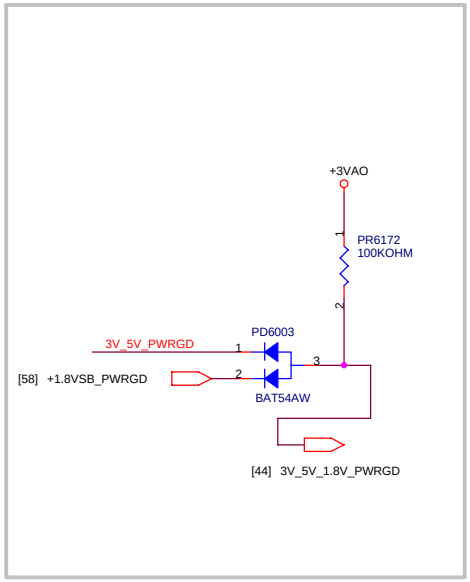

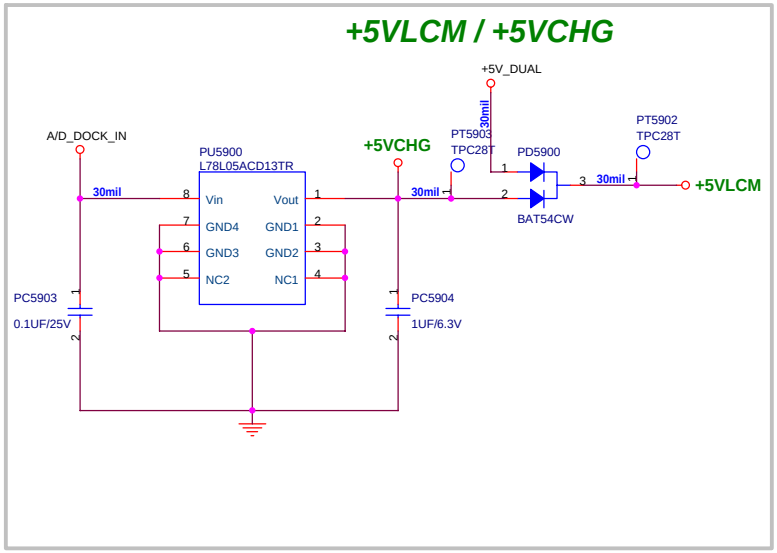

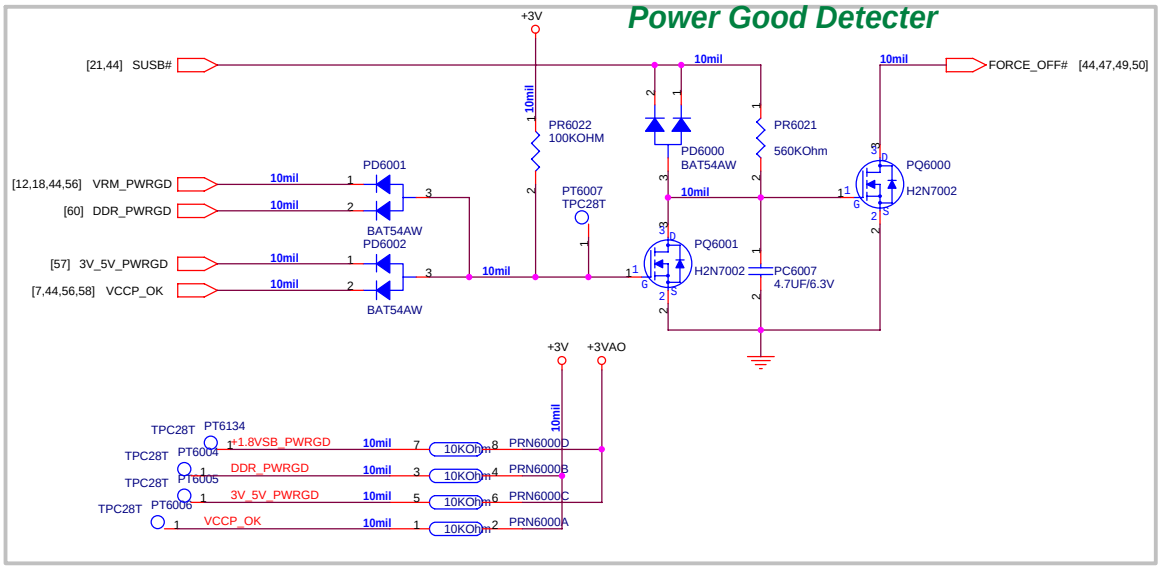

ASUSTeK COMPUTER INC	Title : POWER_OTHER(2)	
	Engineer:	
Size A3	Project Name Z96H	Rev 1.00G
Date: Wednesday, May 17, 2006	Sheet 59 of 60	

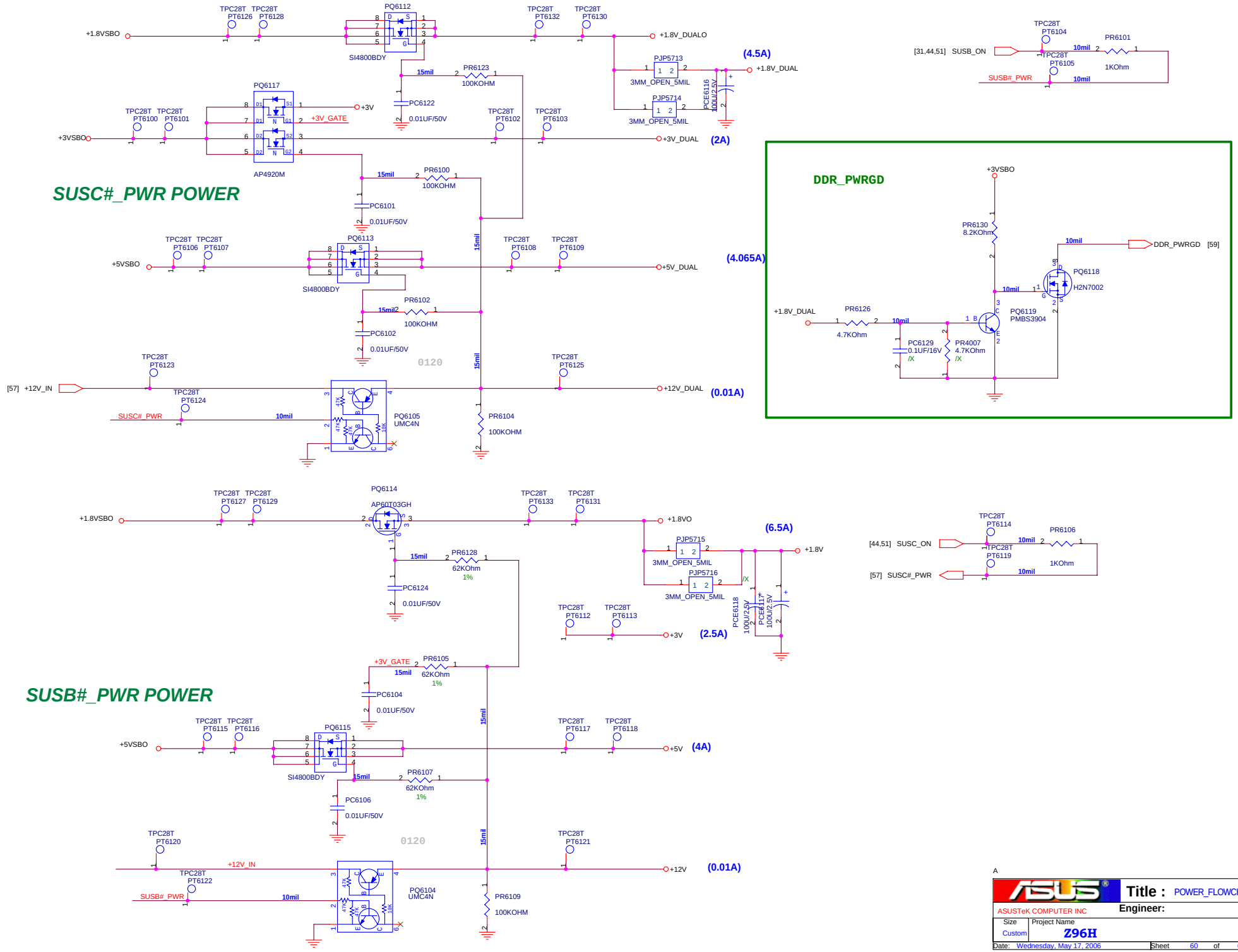
SUSC#_PWR POWER
+1.8VSBO
TPC28T PT6126 TPC28T PT6128
PQ6112
SI4800BDY
TPC28T PT6132 TPC28T PT6130
+1.8V_DUALO
PJP5713
3MM_OPEN_5MIL
PJP5714
3MM_OPEN_5MIL
PCE6116 100U/2.5V
+1.8V_DUAL
(4.5A)
PR6123 100KOHM
PC6122 0.01UF/50V
PQ6117
AP4920M
+3V
+3V_GATE
TPC28T PT6100 TPC28T PT6101
+3VSBO
TPC28T PT6102 TPC28T PT6103
+3V_DUAL
(2A)
PR6100 100KOHM
PC6101 0.01UF/50V
PQ6113
SI4800BDY
+5VSBO
TPC28T PT6106 TPC28T PT6107
TPC28T PT6108 TPC28T PT6109
+5V_DUAL
(4.065A)
PR6102 100KOHM
PC6102 0.01UF/50V
0120
TPC28T PT6123
[57] +12V_IN
TPC28T PT6124
SUSC#_PWR
PQ6105 UMC4N
PR6104 100KOHM
TPC28T PT6125
+12V_DUAL
(0.01A)
[31,44,51] SUSB_ON
TPC28T PT6104
TPC28T PT6105
PR6101 1KOhm
SUSB#_PWR
DDR_PWRGD
+3VSBO
PR6130 8.2KOhm
DDR_PWRGD [59]
PQ6118 H2N7002
+1.8V_DUAL
PR6126 4.7KOhm
PQ6119 PMBS3904
PC6129 0.1UF/16V /X
PR4007 4.7KOhm /X
SUSB#_PWR POWER
+1.8VSBO
TPC28T PT6127 TPC28T PT6129
PQ6114 AP60T03GH
TPC28T PT6133 TPC28T PT6131
+1.8VO
(6.5A)
PJP5715
3MM_OPEN_5MIL
PJP5716
3MM_OPEN_5MIL
PCE6118 100U/2.5V
PCE6117 100U/2.5V
+1.8V
PR6128 62KOhm 1%
PC6124 0.01UF/50V
TPC28T PT6112 TPC28T PT6113
+3V
(2.5A)
[44,51] SUSC_ON
[57] SUSC#_PWR
TPC28T PT6114
TPC28T PT6119
PR6106 1KOhm
+3V_GATE
PR6105 62KOhm 1%
PC6104 0.01UF/50V
PQ6115
SI4800BDY
+5VSBO
TPC28T PT6115 TPC28T PT6116
TPC28T PT6117 TPC28T PT6118
+5V
(4A)
PR6107 62KOhm 1%
PC6106 0.01UF/50V
0120
TPC28T PT6120
+12V_IN
TPC28T PT6122
SUSB#_PWR
PQ6104 UMC4N
PR6109 100KOHM
TPC28T PT6121
+12V
(0.01A)
Title : POWER_FLOWCHART
ASUSTeK COMPUTER INC
Engineer:
Size Custom
Project Name Z96H
Rev 1.00G
Date: Wednesday, May 17, 2006
Sheet 60 of 60