01 Block Diagram
02 System Setting
03 POWER SEQUENCE
04 CPU-Penryn(HOST)
05 CPU-Penryn(PWR)
06 *
07 Cantiga(HOST)
08 Cantiga(DMI & CFG)
09 Cantiga(GRAPHIC)
10 Cantiga(DDR2)
11 Cantiga(PWR)
12 Cantiga(PWR2)
13 Cantiga(GND)
14 *
15 SB-ICH9M(1)_SATA
16 SB-ICH9M(2)_PCIE/USB
17 SB-ICH9M(3)_PM/GPIO
18 SB-ICH9M(PWR)
19 *
20 DDR2 SO-DIMM0
21 DDR2 SO-DIMM1
22 DDR2 TERMINATION
23 *
24 *
25 *
26 *
27 *
28 *
29 *
30 EC_IT8512E-L(1/2)
31 EC_IT8512E-L(2/2)
32 CRT
33 LVDS & INVERTER CONNECTOR
34 BT
35 *
36 CONEXANT CX20582
37 CONEXANT_HP/MIC
38 THER SENSOR & FAN
39 CLOCK GEN-ICS9LPR363DGLF-T
40 *
41 Switch Button & LED
42 DISCHARGE
43 *
44 PCI-E LAN_RTL8111C
45 MDC & RJ45+11
46 Mini card_WLAN+3G
47 *
48 *
49 *
50 *
51 *
52 *
53 CardReader & SIM CONN & TPM
54 NEWCARD
55 *
56 HDA level shifter
57 iHDMI
58 *
59 *
60 *
61 *
62 USB CONN
63 *
64 *
65 *
66 *
67 DEBUG CONN
68 DC & BAT IN
69 *
70 *
71 *
72 SATA-HDD & ODD
73 *
74 HOLE & Spring
75 *
76 EXPRESS GATE
77 History
78 *
79 *
80 POWER_VCORE
81 POWER_SYSTEM
82 POWER_I/O_1.5VS & 1.05VS
83 POWER_I/O_DDR & VTT
84 POWER_I/O(Empty)
85 POWER_VGA_CORE&1.1VS(Empty)
86 POWER_MCH_CORE(Empty)
87 POWER_CHARGER
88 POWER_DETECT
89 POWER_LOAD SWITCH
90 POWER_PROTECT
91 POWER_SIGNAL
92 POWER_FLOWCHART
93 POWER_HISTORY

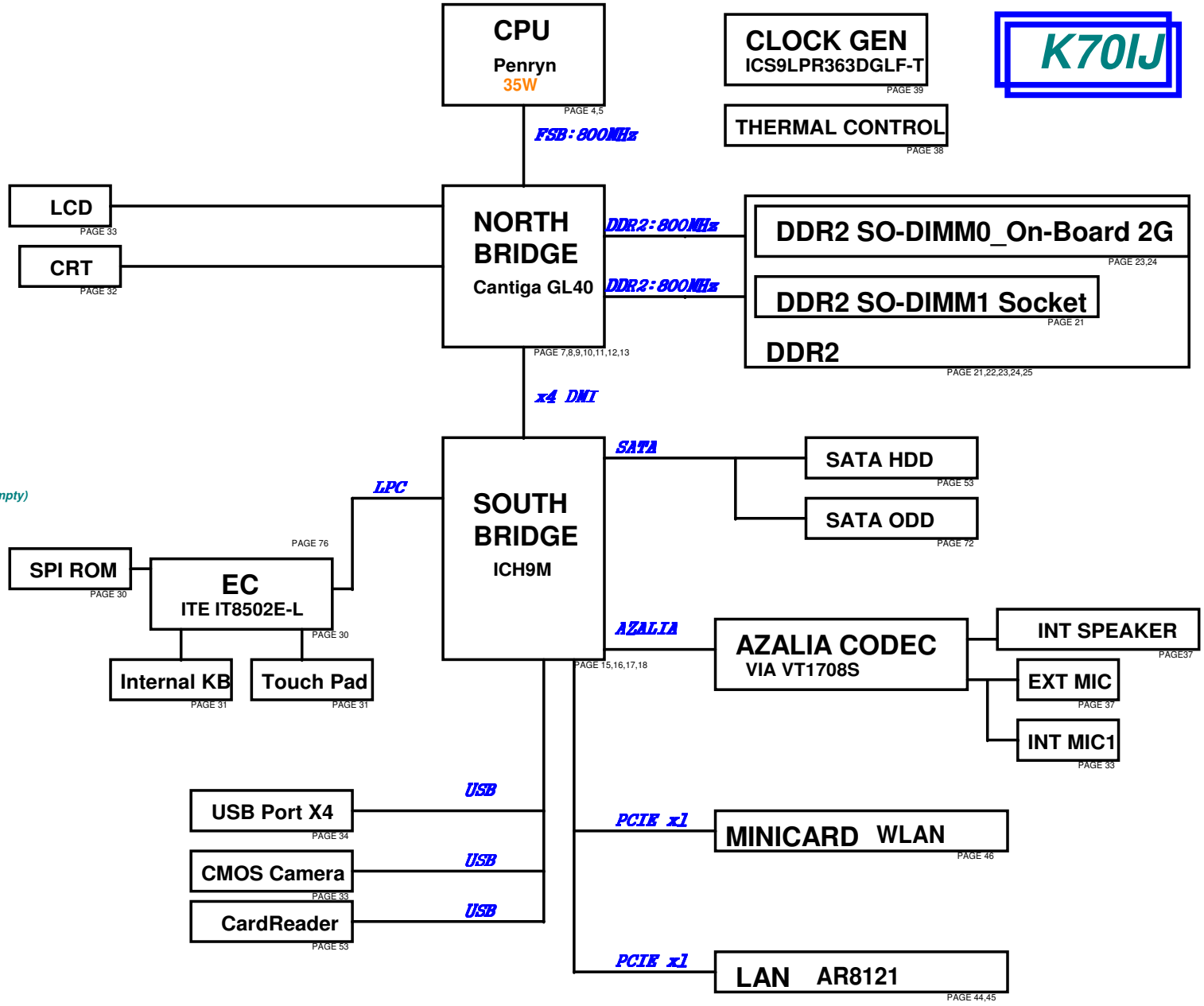

<Variant Name>

ASUS

Title : Block Diagram

ASUSTek Computer INC. NB1

Engineer: Leon

Size	Project Name	Rev
Custom	K70IJ	1.0

Date: Wednesday, April 29, 2009 Sheet 1 of 96

ICH9-M GPIO	Use As	Signal Name	Power
GPIO 00	GPI	PM_SYNC#(programmed as GPO)	+3VS
GPIO 01	GPI	-	+3VS
GPIO [2:5]	GPI	PCI_INT[E:H]# EXT PU	+5VS
GPIO 06	GPI	BIOS_REC EXT PU	+3VS
GPIO 07	GPO	SEL_VID2 -	+3VS
GPIO 08	GPI	EXT_SMI# EXT PU	+3VSUS
GPIO 09	Native	-	+3VSUS
GPIO 10	GPI	RTLAN_DSM# EXT PU	+3VSUS
GPIO 11	Native	EXT_SCI#(Programmed as GPI)	+3VSUS
GPIO 12	GPO	GPIO12	+3VSUS
GPIO 13	GPI	-	+3VSUS
GPIO 14	GPI	AC_PRESENT EXT PD	+3VSUS
-	-	-	-
GPIO 16	Native	PM_DPRSLPVR INT PD*	+3VS
GPIO 17	GPI	WLAN_LED(Programmed as GPO)	+3VS
GPIO 18	GPO	SEL_VID3 -	+3VS
GPIO 19	GPO	SEL_VID0 -	+3VS
GPIO 20	GPO	SEL_VID4 - INT PD*	+3VS
GPIO 21	GPO	VID_SW - High Active	+3VS
GPIO 22	GPI	BT_DET# EXT PU	+3VS
GPIO 23	Native	LPC_DRQ#1 INT PU	+3VS
GPIO 24	GPO	-	+3VSUS
-	-	-	-
GPIO 26	Native	PM_S4_STATE#	+3VSUS
GPIO 27	GPO	SEL_VID5	+3VSUS
GPIO 28	GPO	SEL_VID6	+3VSUS
GPIO 29	Native	USB_OC#_ALL	+3VSUS
GPIO 30	Native	CLK_DEC#	+3VSUS
GPIO 31	Native	CLK_ACC	+3VSUS
-	-	-	-
GPIO 33	GPO	- INT PU*	+3VS
GPIO 34	GPO	-	+3VS
GPIO 35	GPO	GPO35	+3VS
GPIO 36	GPO	SEL_VID1 -	+3VS
GPIO 37	GPI	PCB_ID0	+3VS
GPIO 38	GPI	PCB_ID1	+3VS
GPIO 39	GPI	PCB_ID2	+3VS
GPIO 40	Native	USB_CON_OC01#	+3VSUS
GPIO 41	Native	USB_CON_OC23#	+3VSUS
GPIO 42	Native	USB_CON_OC23#	+3VSUS
GPIO 43	Native	USB_OC#_ALL	+3VSUS
GPIO 44	Native	USB_OC#_ALL	+3VSUS
GPIO 45	Native	USB_OC#_ALL	+3VSUS
GPIO 46	Native	WLAN_ON	+3VSUS
GPIO 47	Native	USB_OC#_ALL	+3VSUS
GPIO 48	GPI	-	+3VS
GPIO 49	GPO	-	+3VS
GPIO 50	Native	PCI_REQ1#	+5VS
GPIO 51	Native	PCI_GNT1# INT PU*	+3VS
GPIO 52	Native	PCI_REQ2#	+5VS
GPIO 53	Native	PCI_GNT2# INT PU*	+3VS
GPIO 54	Native	PCI_REQ3#	+5VS
GPIO 55	Native	PCI_GNT3# INT PU*	+3VS
GPIO 56	GPI	- EXT PU	+3VSUS
GPIO 57	GPI	- EXT PU	+3VSUS
GPIO 58	GPI	- INT PU*	+3VSUS
GPIO 59	Native	USB_CON_OC01#	+3VSUS
GPIO 60	Native	RTLAN_DSM_EN	+3VSUS

GPIO33 Internal Pull High, Go Low= Flash - Descriptor Security will be overriden

INT PU*: PU or PD in special time

EC GPIO	Use As	Signal Name	Power
GPA0	GPO	PWR_LED#	
GPA1	GPO	CHG_LED#	
GPA2	GPO	-	
GPA3	-	-	
GPA4	GPO	LCD_BL_PWM	
GPA5	GPO	FAN0_PWM	
GPA6	GPO	VCORE_CNT1	
GPA7	GPO	VCORE_CNT2	
GPB0	GPO	BATSEL_0	
GPB1	GPO	BATSEL_1	
GPB2	GPI	-	
GPB3	ALT	SMB0_CLK	
GPB4	ALT	SMB0_DAT	
GPB5	OD	A20GATE	
GPB6	OD	RC_IN#	
GPB7	GPO	PM_RSMRST#	
GPC0	GPI	-	
GPC1	ALT	SMB1_CLK	
GPC2	ALT	SMB1_DAT	
GPC3	GPO	PM_PWRBTN#	
GPC4	ALT	AC_IN_OC#	
GPC5	GPO	OP_SD#	
GPC6	ALT	TS1#	
GPC7	GPO	RFON_SW#	
GPD0	GPI	PWRLIMIT#	
GPD1	ALT	PM_SUSC#	
GPD2	ALT	BUF_PLT_RST#	
GPD3	OD	EXT_SCI#	
GPD4	OD	EXT_SMI#	
GPD5	GPO	LCD_BACKOFF#	
GPD6	ALT	FAN0_TACH	
GPD7	GPI	-	
GPE0	GPO	VSUS_ON	
GPE1	GPO	SUSC_EC#	
GPE2	GPO	SUSB_EC#	
GPE3	GPO	CPU_VRON	
GPE4	ALT	PWR_SW#	
GPE5	ALT	BAT2_IN_OC#	
GPE6	GPI	LID_SW#	
GPE7	GPO	DJ_SW#	
GPF0	GPI	-	
GPF1	GPI	-	
GPF2	ALT	MARATHON#	
GPF3	ALT	-	
GPF4	ALT	TP_CLK	
GPF5	ALT	TP_DAT	
GPF6	GPO	THRO_CPU	
GPF7	GPO	-	
GPG0	GPI	PM_THERM#	
GPG1	ALT	PM_SUSB#	
GPG2	GPO	-	
-	-	-	
-	-	-	

EC GPIO	Use As	Signal Name	Power
-	-	-	
GPG6	GPO	-	
-	-	-	
GPH0	OD	PM_CLKRUN#	
GPH1	ALT	-	
GPH2	ALT	CHG_EN	
GPH3	GPO	-	
GPH4	GPO	-	
GPH5	GPO	NUM_LED#	
GPH6	GPO	CAP_LED#	
-	-	-	
GPI0	GPI	VGA_ALERT#	
GPI1	GPI	SUS_PWRGD	
GPI2	GPI	ALL_SYSTEM_PWRGD	
GPI3	GPI	VRM_PWRGD	
GPI4	GPI	RECOVERY	
GPI5	GPI	ADP_ERR#	
GPI6	GPI	-	
GPI7	GPI	-	
GPJ0	GPO	HDCP_EPROM_PROTECT#	
GPJ1	GPO	PM_PWROK	
GPJ2	GPI	VSET_EC	
GPJ3	-	ISET_EC	
GPJ4	GPO	-	
GPJ5	GPO	-	

PCI Device	IDSEL#	REQ/GNT#	Interrupts

PCIE Device	Bus	PCIE Device	Bus
WLAN	PE(T/R)(p/n)2		
GLAN	PE(T/R)(p/n)6		

SM-Bus Device	SM-Bus Address
Clock Generator	1101001x (D2)
SO-DIMM 0	1010000x (A0)
SO-DIMM 1	1010001x (A2)
CPU Thermal Sensor(MAX6619)	1001100x (98)

<Variant Name>

ASUSTek Computer INC. NB1

Title : System Setting

Engineer: Leon

Size	Project Name	Rev
Custom	K70IJ	1.0

Date: Wednesday, April 29, 2009 Sheet 2 of 96

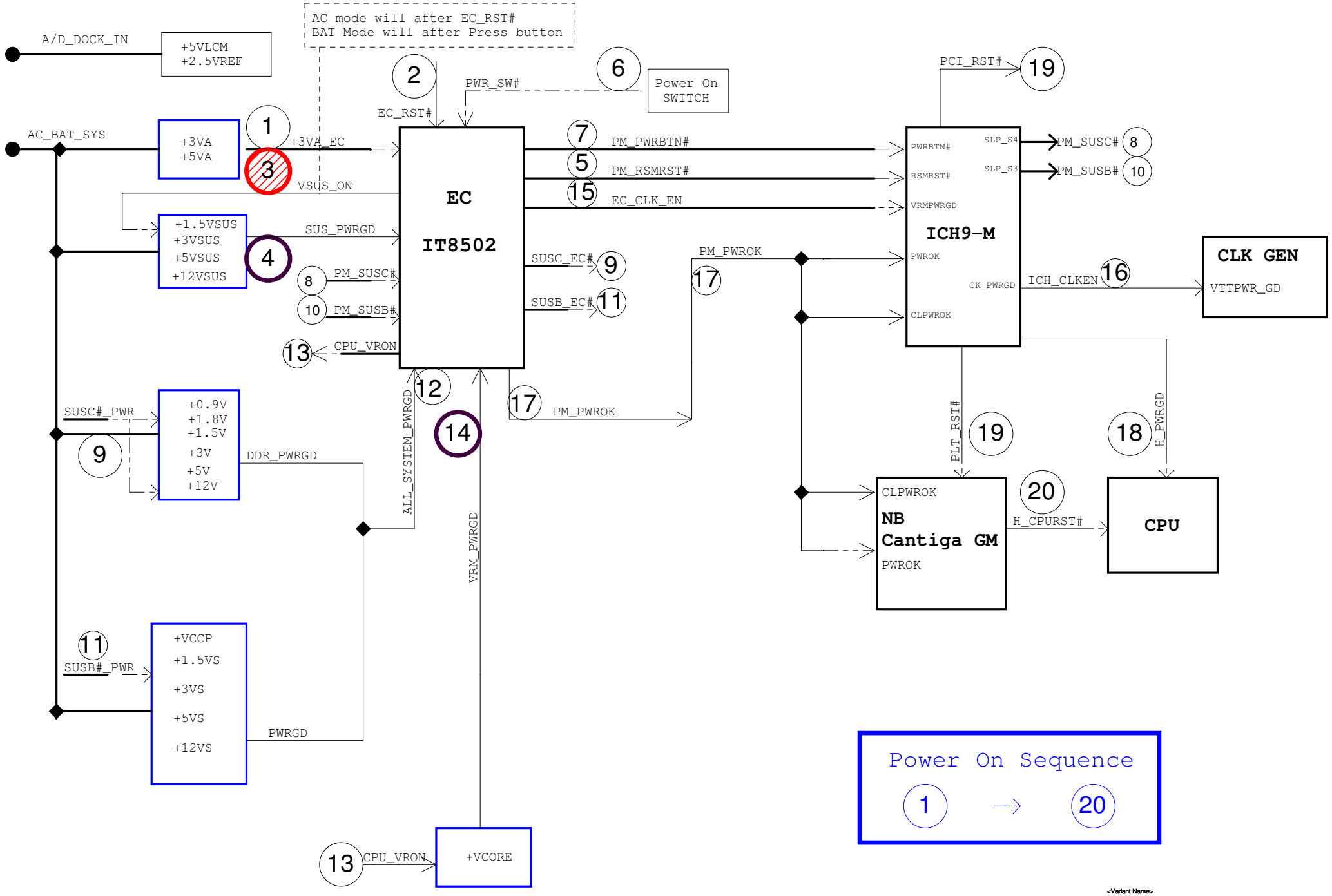

<Variant Name>

ASUSTeK COMPUTER INC

Title : Sequence

Engineer: Leon

Size	Project Name	Rev
Custom	K70IJ	1.0

Date: Wednesday, April 29, 2009 Sheet 3 of 96

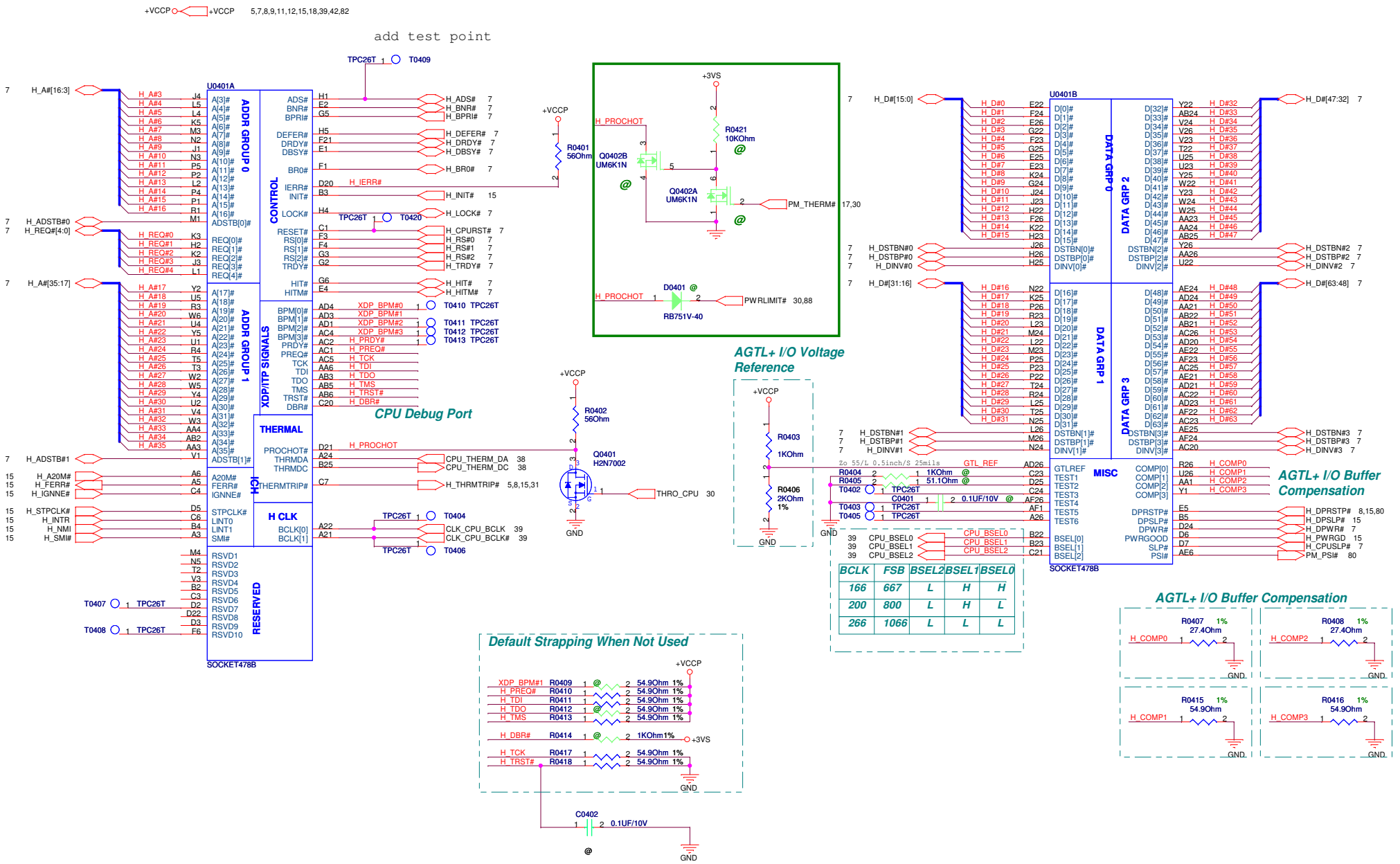

<Variant Name>

ASUS	Title :	CPU-Penryn(HOST)
ASUSTeK COMPUTER INC. NB1	Engineer:	Leon
Size: Custom	Project Name: K70IJ	Rev: 1.0
Date: Thursday, April 30, 2009	Sheet 4 of 96	

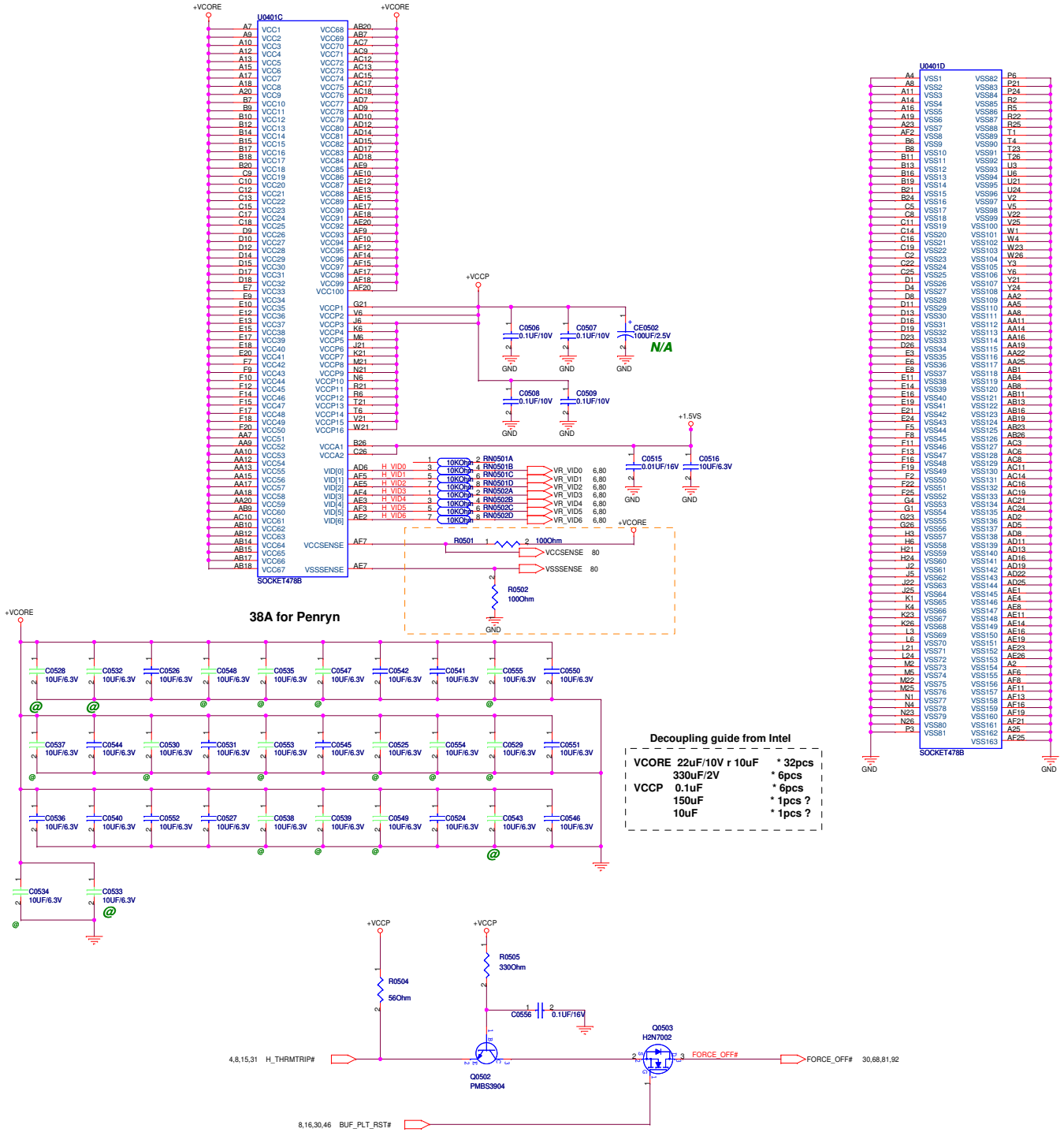

<Variant Name>

ASUSTeK COMPUTER INC. NB1

Title : CPU_Penryn(PWR)

Engineer: Leon

Size	Project Name	Rev
C	K70IJ	1.0

Date: Thursday, April 30, 2009 Sheet 5 of 96

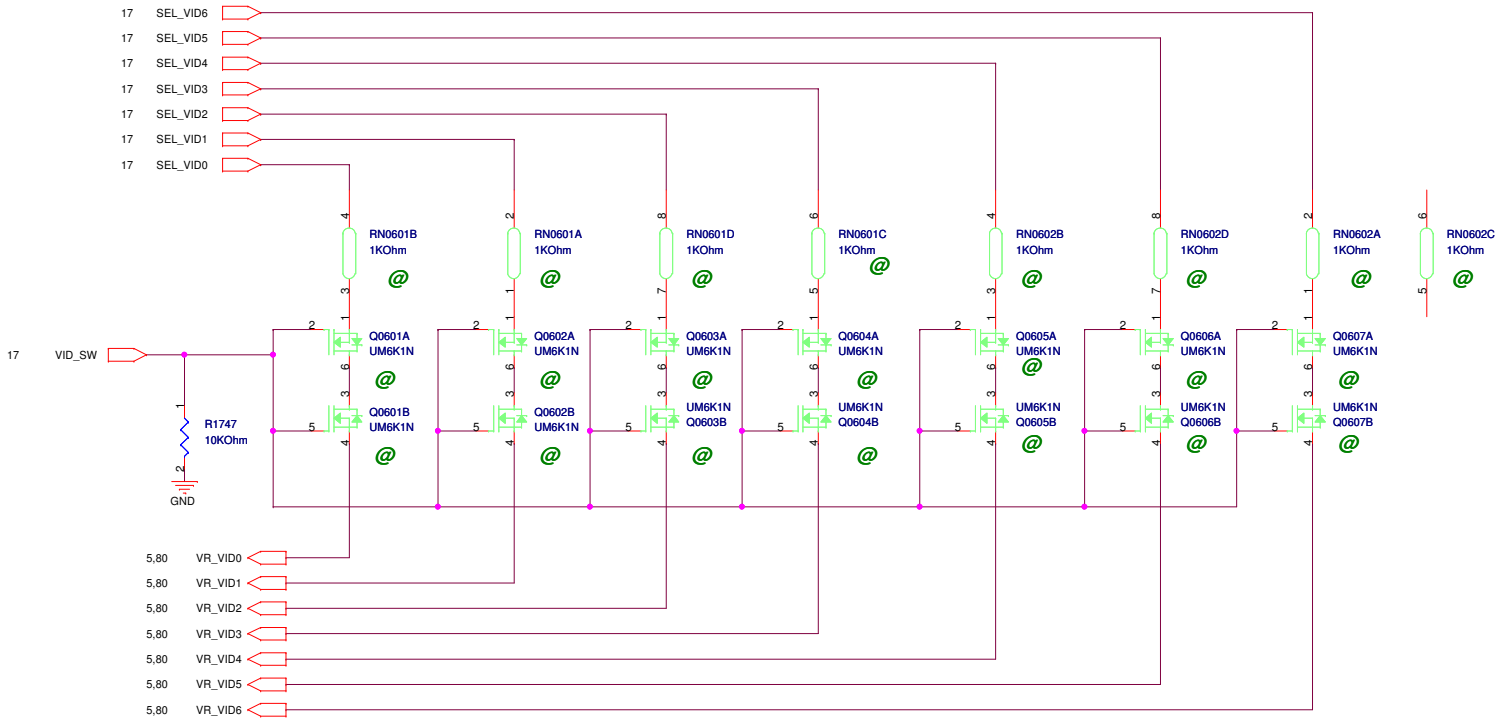

<Variant Name>

ASUSTeK COMPUTER INC

Title : Schematic page name

Engineer: Leon

Size	Project Name	Rev
Custom	K70IJ	1.0

Date: Thursday, April 30, 2009 Sheet 6 of 96

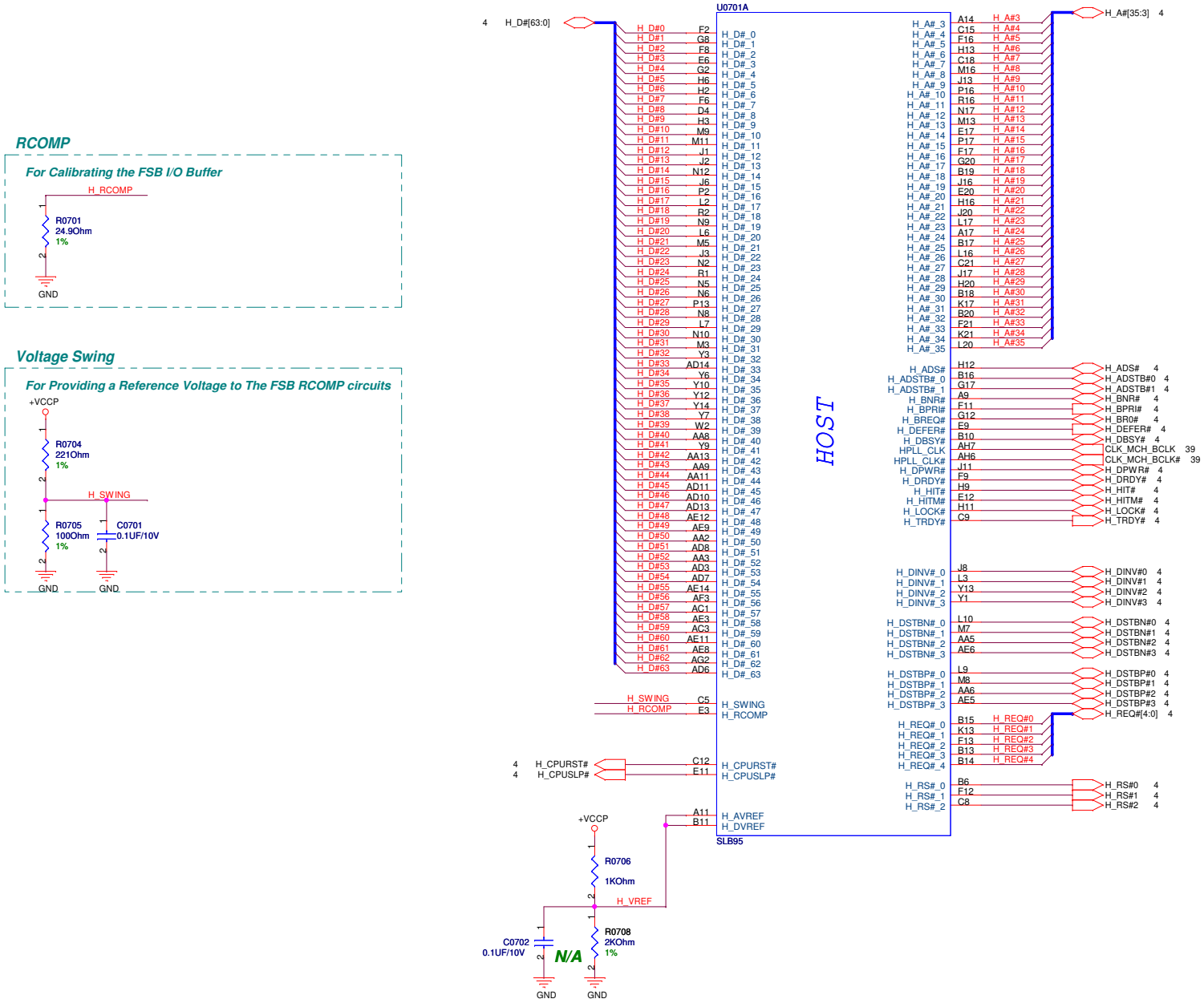

<Variant Name>

ASUS	Title : NB-Cantiga(HOST)		
ASUSTeK COMPUTER INC. NB1	Engineer: Leon		
Size: Custom	Project Name: K70IJ		Rev: 1.0
Date: Thursday, April 30, 2009	Sheet 7 of 96		

GMCH Strapping

CFG5 : DMI Strap

0 = DMI x2
1 = DMI x4 (D)

MCH_CFG_5 — R0896 @ 2.21KOhm 1% — GND

CFG10 : PCIE Loopback enable
CFG[13:12] : GMCH Test Mode

CFG10 : PCIE Loopback enable
0 = Enabled
1 = Disabled (D)

CFG19 : DMI Lane Reversal

0 = Normal Operation (D)
1 = Lanes Reversed

MCH_CFG_19 — R0802 @ 4.02KOHM 1% — +3VS

CFG6: iTMP

0 = Enabled
1 = Disabled (D)

MCH_CFG_6 — R0862 @ 2.21KOhm 1% — GND

CFG[13:12] : GMCH Test Mode

00 = Reserved
10 = XOR Mode Enable
01 = All Z Mode Enable
11 = Normal Operation (D)

MCH_CFG_10 — R0871 @ 2.21KOhm 1%
MCH_CFG_12 — R0872 @ 2.21KOhm 1%
MCH_CFG_13 — R0873 @ 2.21KOhm 1%
— GND

CFG20 : Concurrent SDVO / PCIe

0 = Only one is operational (D)
1 = operate simultaneous

MCH_CFG_20 — R0808 @ 4.02KOHM 1% — +3VS

CFG7: ME TLS

0 = ME TLS with no confidentiality
1 = ME TLS with confidentiality (D)

MCH_CFG_7 — R0861 @ 2.21KOhm 1% — GND

SDVO_CTRL_DATA : SDVO/iHDMI/DP Interface Present

0 = SDVO/iHDMI/DP Disabled (D)
1 = SDVO/iHDMI/DP Enabled

HDMI_SCL — R0849 4.02KOHM 1% — +3VS

CFG9 : PCIE Graphic Lane

0 = Reverse Lane
1 = Normal Operation (D)

MCH_CFG_9 — R0809 @ 2.21KOhm 1% — GND

CFG16 : FSB Dynamic ODT

0 = Dynamic ODT Disable
1 = Dynamic ODT Enable (D)

MCH_CFG_16 — R0811 @ 2.21KOhm 1% — GND

DDPC_CTRL_DATA : SDVO/iHDMI/DP Device Present

0 = No SDVO/iHDMI/DP (D)
1 = SDVO/iHDMI/DP Present

DDPC_CTRL_DATA — R0850 4.02KOHM 1% — +3VS

Only one of the CFG10/CFG12/CFG13 straps can be enabled at any time.

DDPC_CTRL_DATA & SDVO_CTRL_DATA straps should both be high to enable Display Port.

BCLK	FSB	BSEL2	BSEL1	BSEL0
266	1066	L	L	L
166	667	L	H	H
200	800	L	H	L

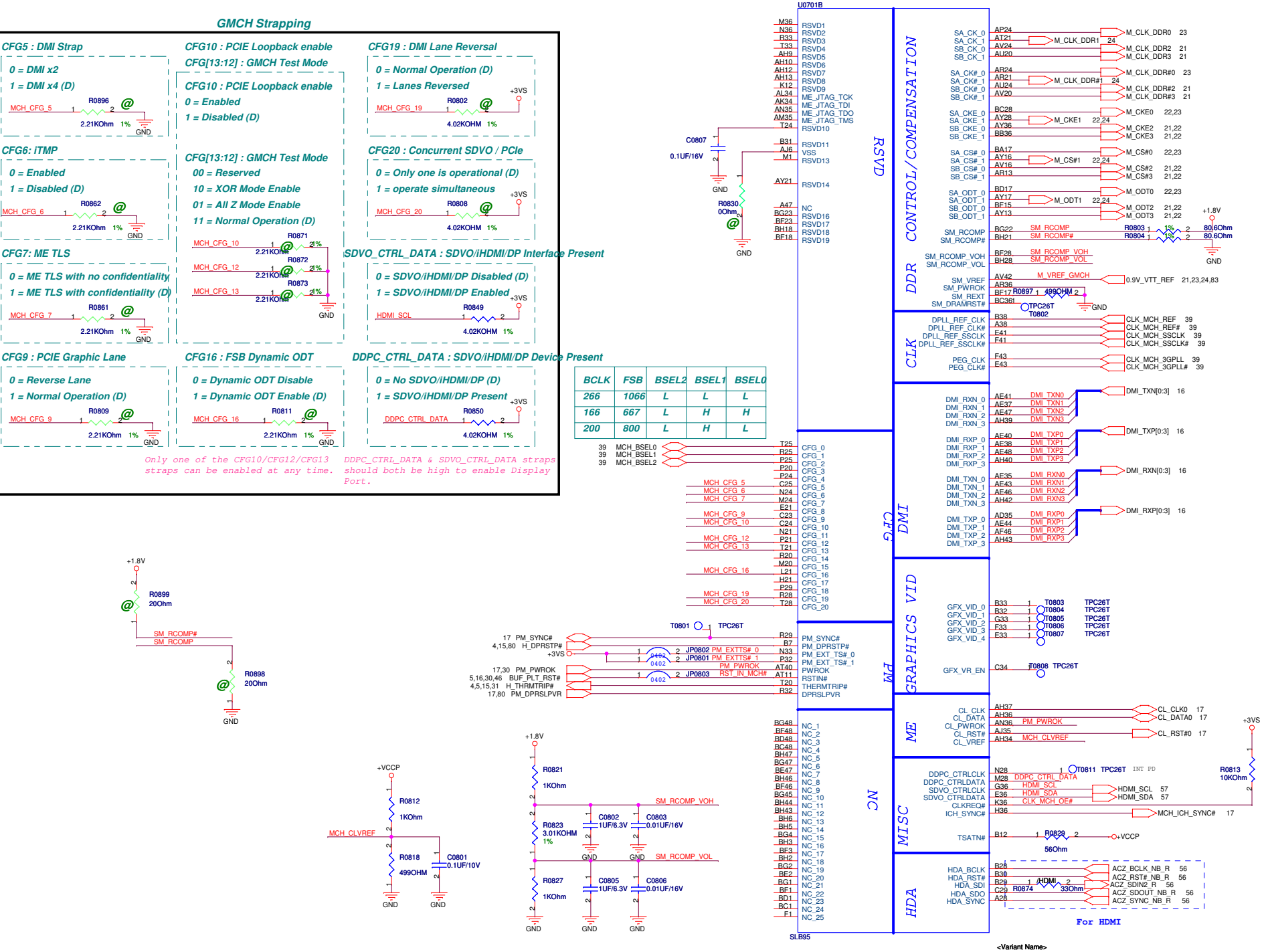

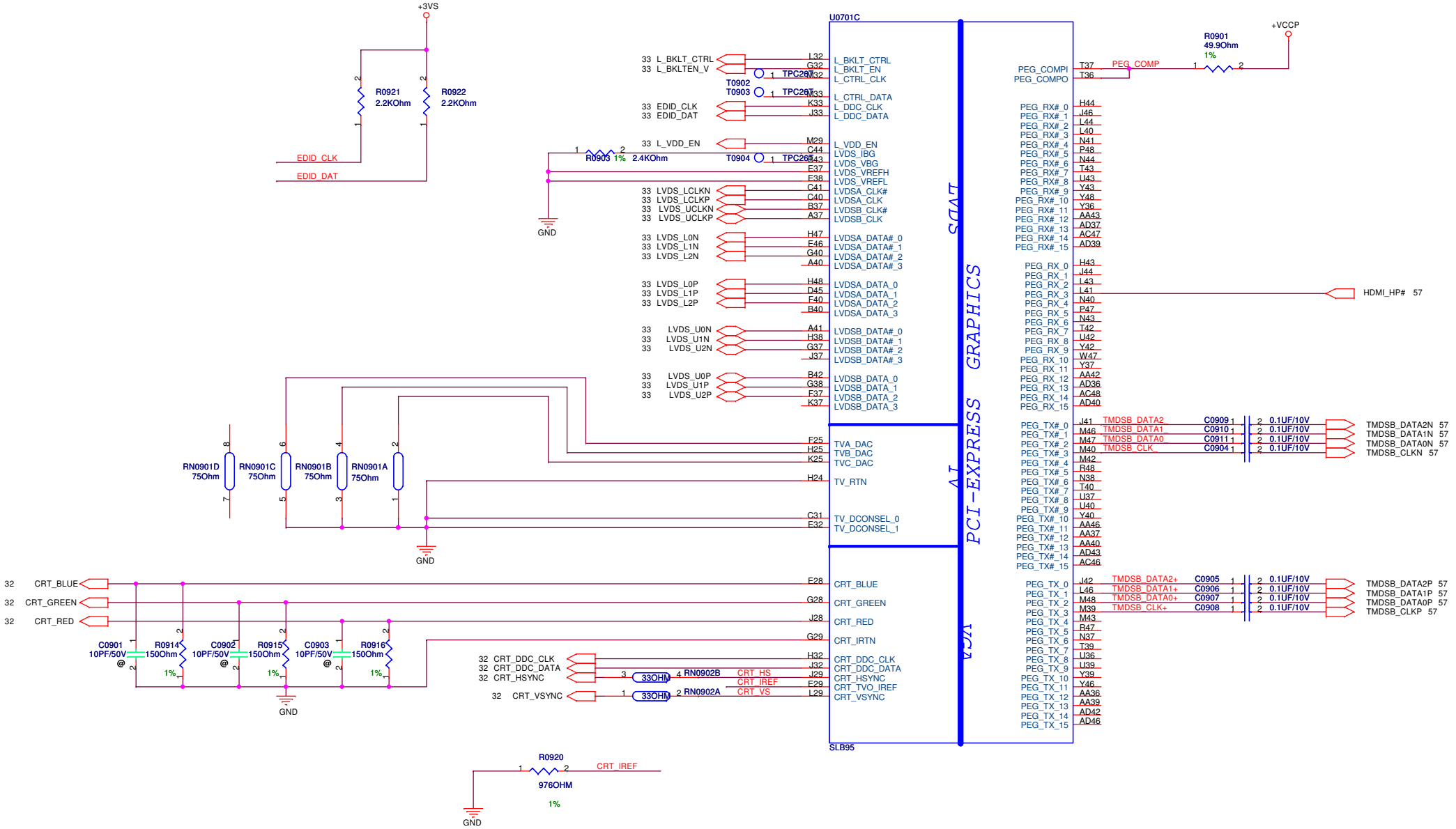

<Variant Name>

ASUSTeK COMPUTER INC. NB1	Title : NB_Cantiga(GRAPHIC)	
	Engineer: Leon	
Size: Custom	Project Name: K70IJ	Rev: 1.0
Date: Thursday, April 30, 2009	Sheet 9 of 96	

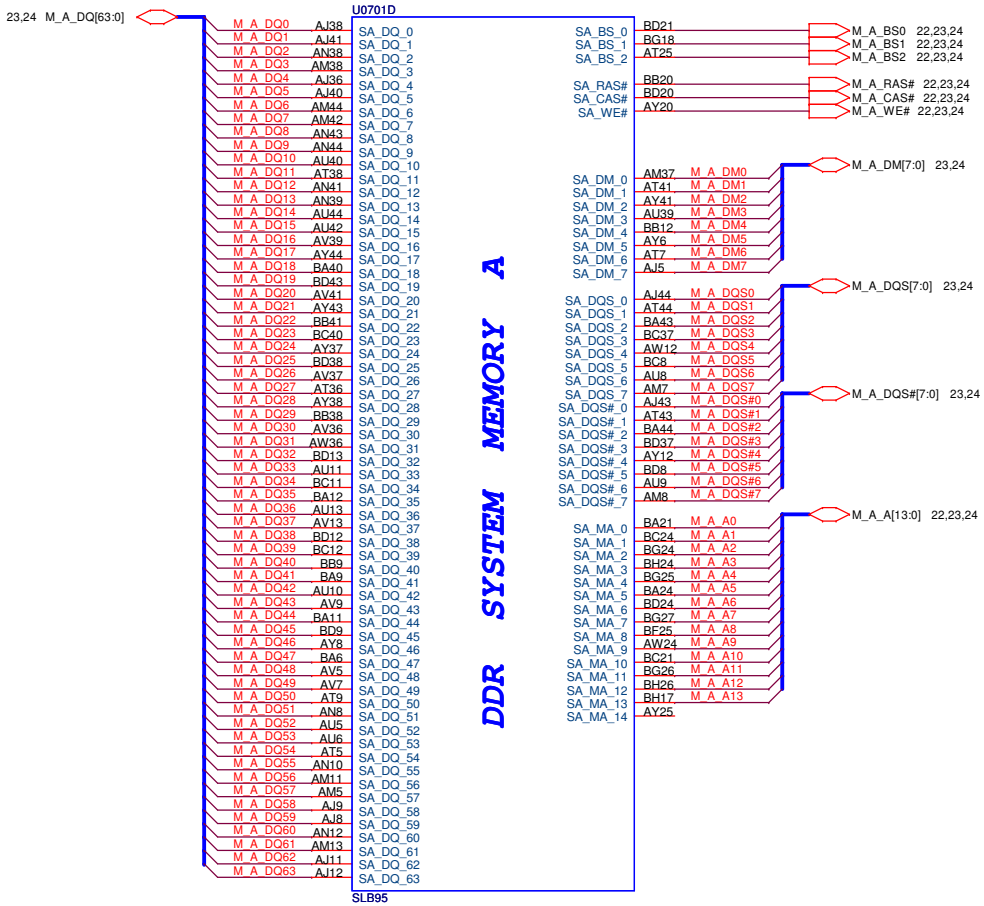

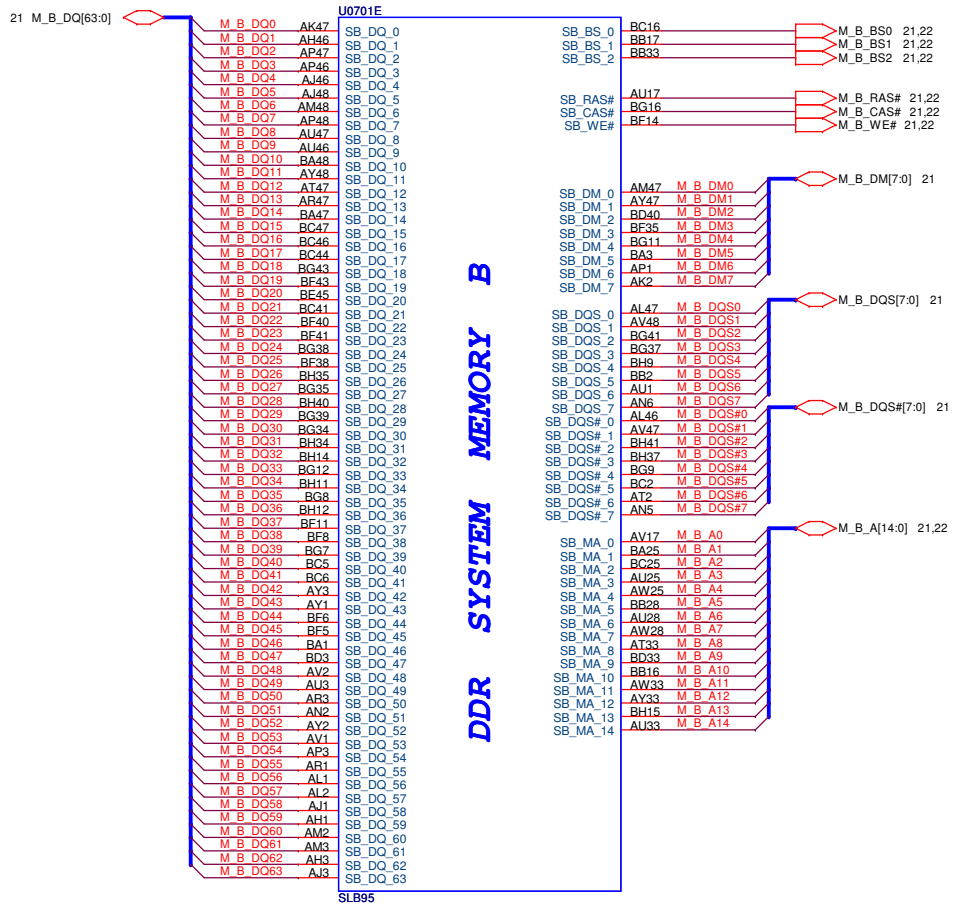

<Variant Name>

ASUSTeK COMPUTER INC. NB1	Title : NB-Cantiga(DDR2)	
	Engineer: Leon	
Size: Custom	Project Name: K70IJ	Rev: 1.0
Date: Thursday, April 30, 2009	Sheet 10 of 96	

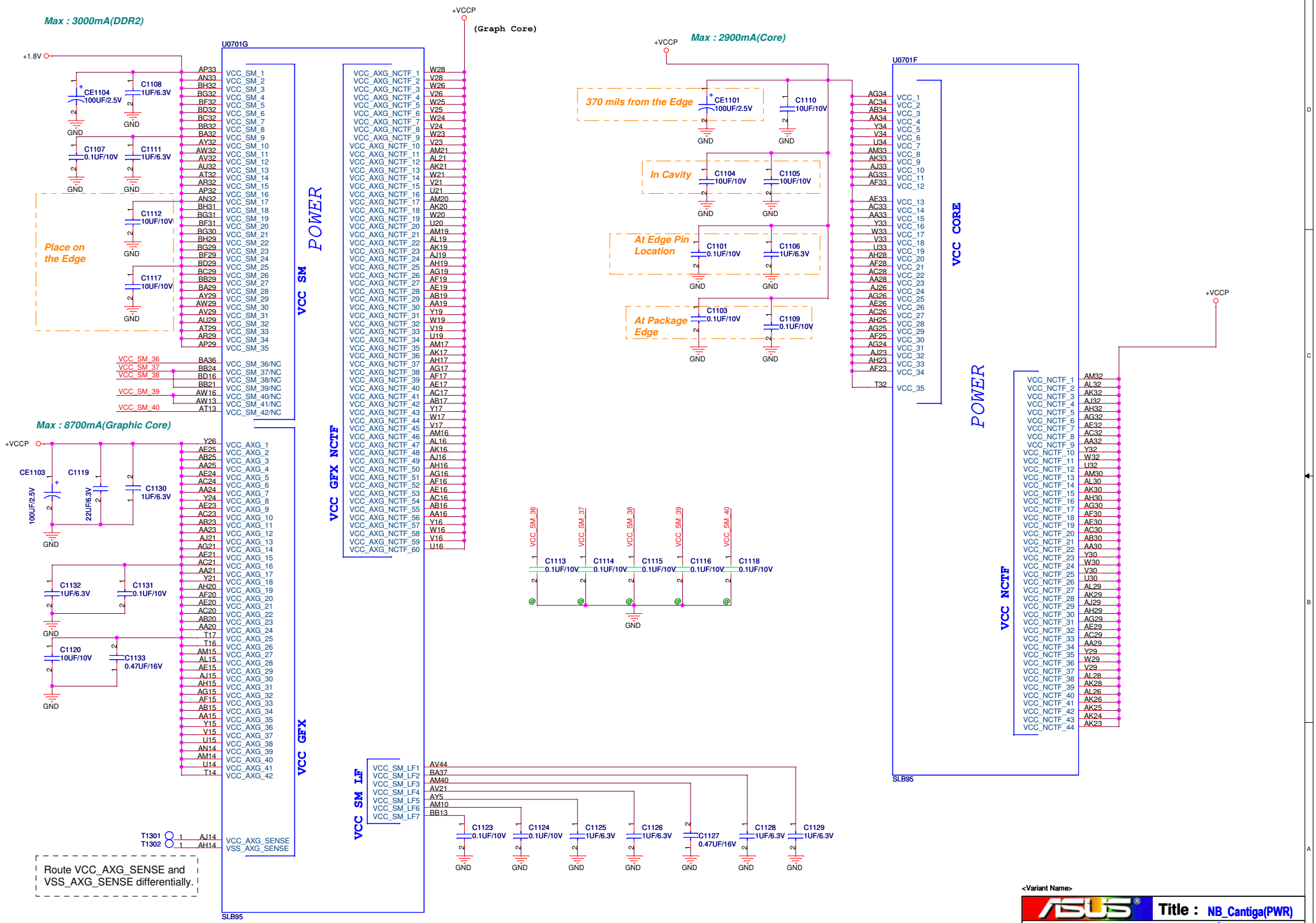

<Variant Name>

ASUS	Title : NB_Cantiga(PWR)	
ASUSTeK COMPUTER INC. NB1	Engineer: Leon	
Size: Custom	Project Name: K70IJ	Rev: 1.0
Date: Wednesday, April 29, 2009	Sheet 11 of 96	

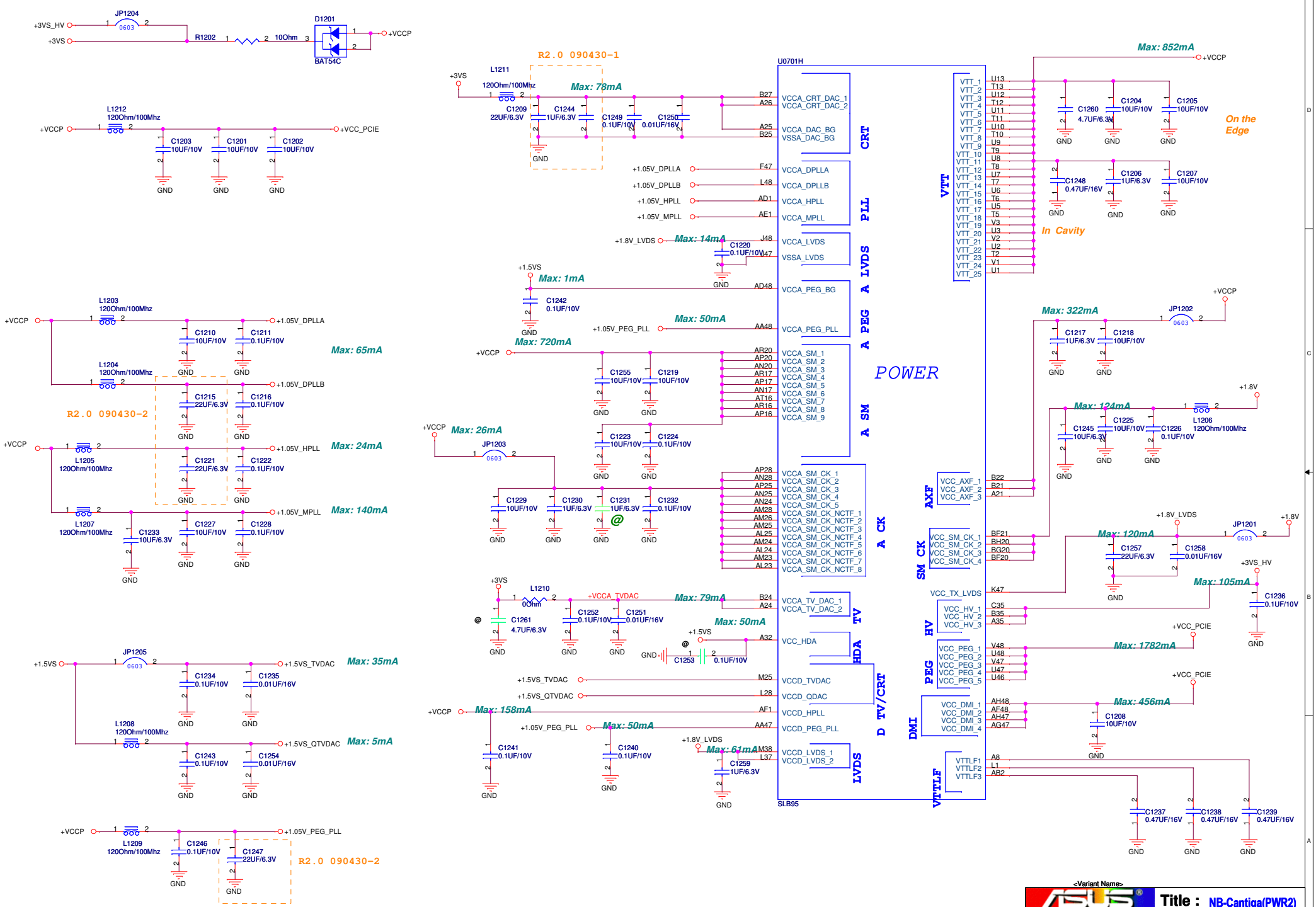
JP1204
+3VS_HV
+3VS
R1202
10Ohm
D1201
BAT54C
+VCCP
L1212
120Ohm/100Mhz
+VCC_PCIE
C1203 10UF/10V
C1201 10UF/10V
C1202 10UF/10V
GND
R2.0 090430-1
L1211
120Ohm/100Mhz
Max: 78mA
C1209 22UF/6.3V
C1244 1UF/6.3V
C1249 0.1UF/10V
C1250 0.01UF/16V
U0701H
VCCA_CRT_DAC_1
VCCA_CRT_DAC_2
VCCA_DAC_BG
VSSA_DAC_BG
CRT
+1.05V_DPLLA
+1.05V_DPLLB
+1.05V_HPLL
+1.05V_MPLL
VCCA_DPLLA
VCCA_DPLLB
VCCA_HPLL
VCCA_MPLL
PLL
+1.8V_LVDS
Max: 14mA
C1220 0.1UF/10V
VCCA_LVDS
VSSA_LVDS
LVDS
+1.5VS
Max: 1mA
C1242 0.1UF/10V
VCCA_PEG_BG
Max: 50mA
+1.05V_PEG_PLL
VCCA_PEG_PLL
PEG
Max: 720mA
+VCCP
C1255 10UF/10V
C1219 10UF/10V
VCCA_SM_1
VCCA_SM_2
VCCA_SM_3
VCCA_SM_4
VCCA_SM_5
VCCA_SM_6
VCCA_SM_7
VCCA_SM_8
VCCA_SM_9
SM
POWER
Max: 26mA
JP1203
C1223 10UF/10V
C1224 0.1UF/10V
C1229 10UF/10V
C1230 1UF/6.3V
C1231 1UF/6.3V
C1232 0.1UF/10V
VCCA_SM_CK_1
VCCA_SM_CK_2
VCCA_SM_CK_3
VCCA_SM_CK_4
VCCA_SM_CK_5
VCCA_SM_CK_NCTF_1
VCCA_SM_CK_NCTF_2
VCCA_SM_CK_NCTF_3
VCCA_SM_CK_NCTF_4
VCCA_SM_CK_NCTF_5
VCCA_SM_CK_NCTF_6
VCCA_SM_CK_NCTF_7
VCCA_SM_CK_NCTF_8
CK
+3VS
L1210
0Ohm
+VCCA_TVDAC
Max: 79mA
C1261 4.7UF/6.3V
C1252 0.1UF/10V
C1251 0.01UF/16V
VCCA_TV_DAC_1
VCCA_TV_DAC_2
TV
Max: 50mA
+1.5VS
C1253 0.1UF/10V
VCC_HDA
HDA
+1.5VS_TVDAC
+1.5VS_QTVDAC
VCCD_TVDAC
VCCD_QDAC
+VCCP
Max: 158mA
+1.05V_PEG_PLL
Max: 50mA
VCCD_HPLL
VCCD_PEG_PLL
D TV/CRT
C1241 0.1UF/10V
C1240 0.1UF/10V
+1.8V_LVDS
Max: 61mA
C1259 1UF/6.3V
VCCD_LVDS_1
VCCD_LVDS_2
LVDS
SLB95
VTT
VTTLF
VTTLF1
VTTLF2
VTTLF3
Max: 852mA
+VCCP
C1260 4.7UF/6.3V
C1204 10UF/10V
C1205 10UF/10V
On the Edge
C1248 0.47UF/16V
C1206 1UF/6.3V
C1207 10UF/10V
In Cavity
Max: 322mA
JP1202
C1217 1UF/6.3V
C1218 10UF/10V
Max: 124mA
+1.8V
C1245 10UF/6.3V
C1225 10UF/10V
C1226 0.1UF/10V
L1206
120Ohm/100Mhz
AXF
VCC_AXF_1
VCC_AXF_2
VCC_AXF_3
SM CK
VCC_SM_CK_1
VCC_SM_CK_2
VCC_SM_CK_3
VCC_SM_CK_4
Max: 120mA
+1.8V_LVDS
JP1201
C1257 22UF/6.3V
C1258 0.01UF/16V
VCC_TX_LVDS
HV
VCC_HV_1
VCC_HV_2
VCC_HV_3
+3VS_HV
Max: 105mA
C1236 0.1UF/10V
+VCC_PCIE
PEG
VCC_PEG_1
VCC_PEG_2
VCC_PEG_3
VCC_PEG_4
VCC_PEG_5
Max: 1782mA
DMI
VCC_DMI_1
VCC_DMI_2
VCC_DMI_3
VCC_DMI_4
Max: 456mA
C1208 10UF/10V
C1237 0.47UF/16V
C1238 0.47UF/16V
C1239 0.47UF/16V
+3VS
JP1205
+1.5VS
+1.5VS_TVDAC
Max: 35mA
C1234 0.1UF/10V
C1235 0.01UF/16V
L1208
120Ohm/100Mhz
+1.5VS_QTVDAC
Max: 5mA
C1243 0.1UF/10V
C1254 0.01UF/16V
+VCCP
L1209
120Ohm/100Mhz
+1.05V_PEG_PLL
C1246 0.1UF/10V
C1247 22UF/6.3V
R2.0 090430-2
L1203
120Ohm/100Mhz
+1.05V_DPLLA
C1210 10UF/10V
C1211 0.1UF/10V
Max: 65mA
L1204
120Ohm/100Mhz
+1.05V_DPLLB
C1215 22UF/6.3V
C1216 0.1UF/10V
R2.0 090430-2
+1.05V_HPLL
Max: 24mA
L1205
120Ohm/100Mhz
C1221 22UF/6.3V
C1222 0.1UF/10V
+1.05V_MPLL
Max: 140mA
L1207
120Ohm/100Mhz
C1233 10UF/6.3V
C1227 10UF/10V
C1228 0.1UF/10V

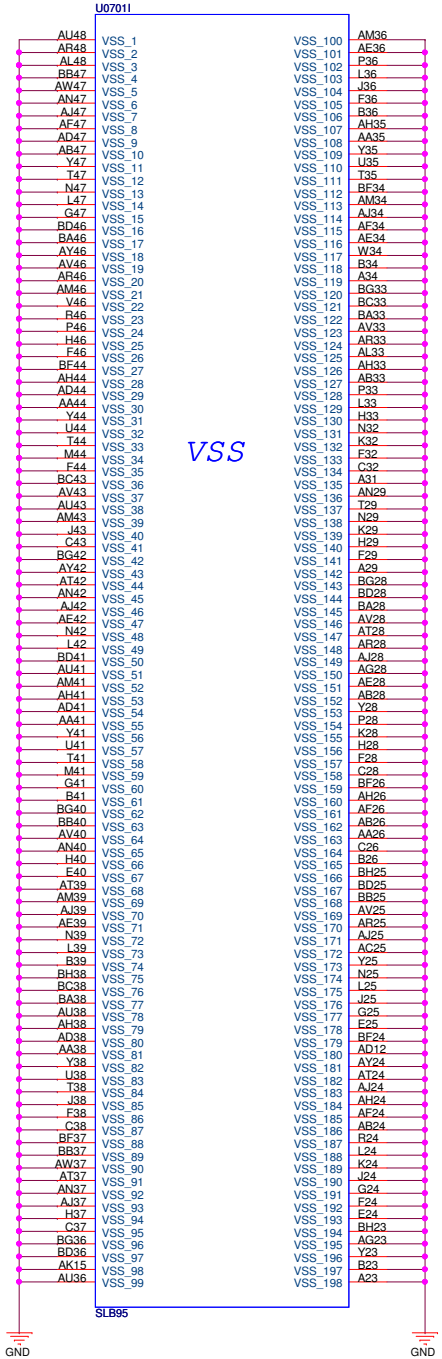

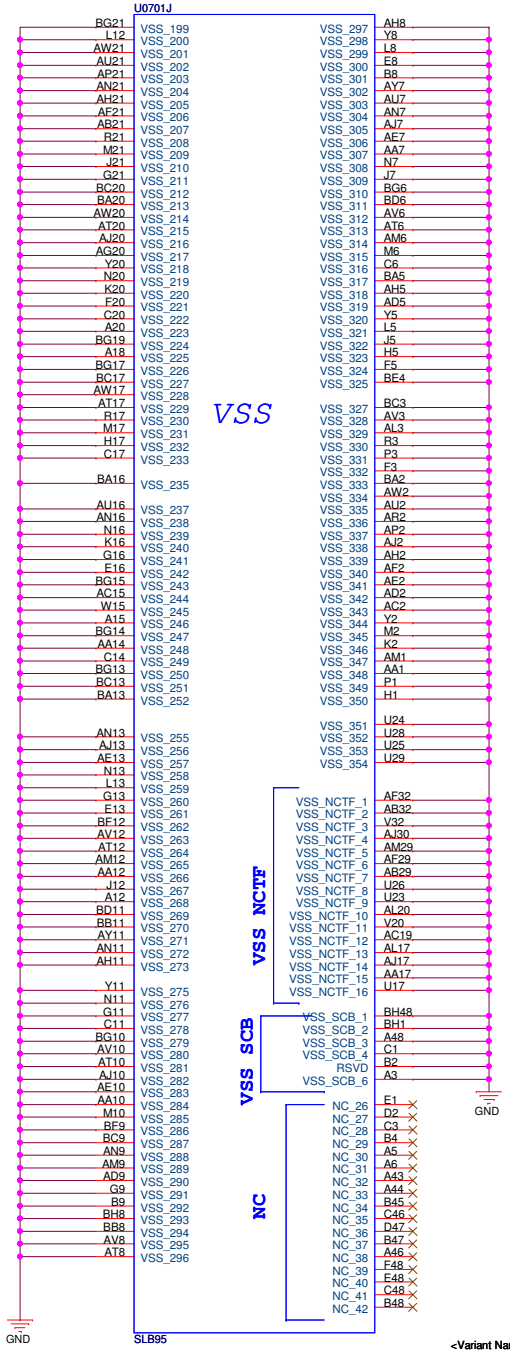

<Variant Name>

ASUSTeK COMPUTER INC. NB1	Title : NB_Cantiga(GND)		
	Engineer: Leon		
Size: Custom	Project Name: K70IJ		Rev: 1.0
Date: Wednesday, April 29, 2009	Sheet 13 of 96		

<Variant Name>

ASUSTeK COMPUTER INC	Title : Schematic page name	
	Engineer: Leon	
Size: C	Project Name: K70IJ	Rev: 1.0
Date: Wednesday, April 29, 2009	Sheet 14 of 96	

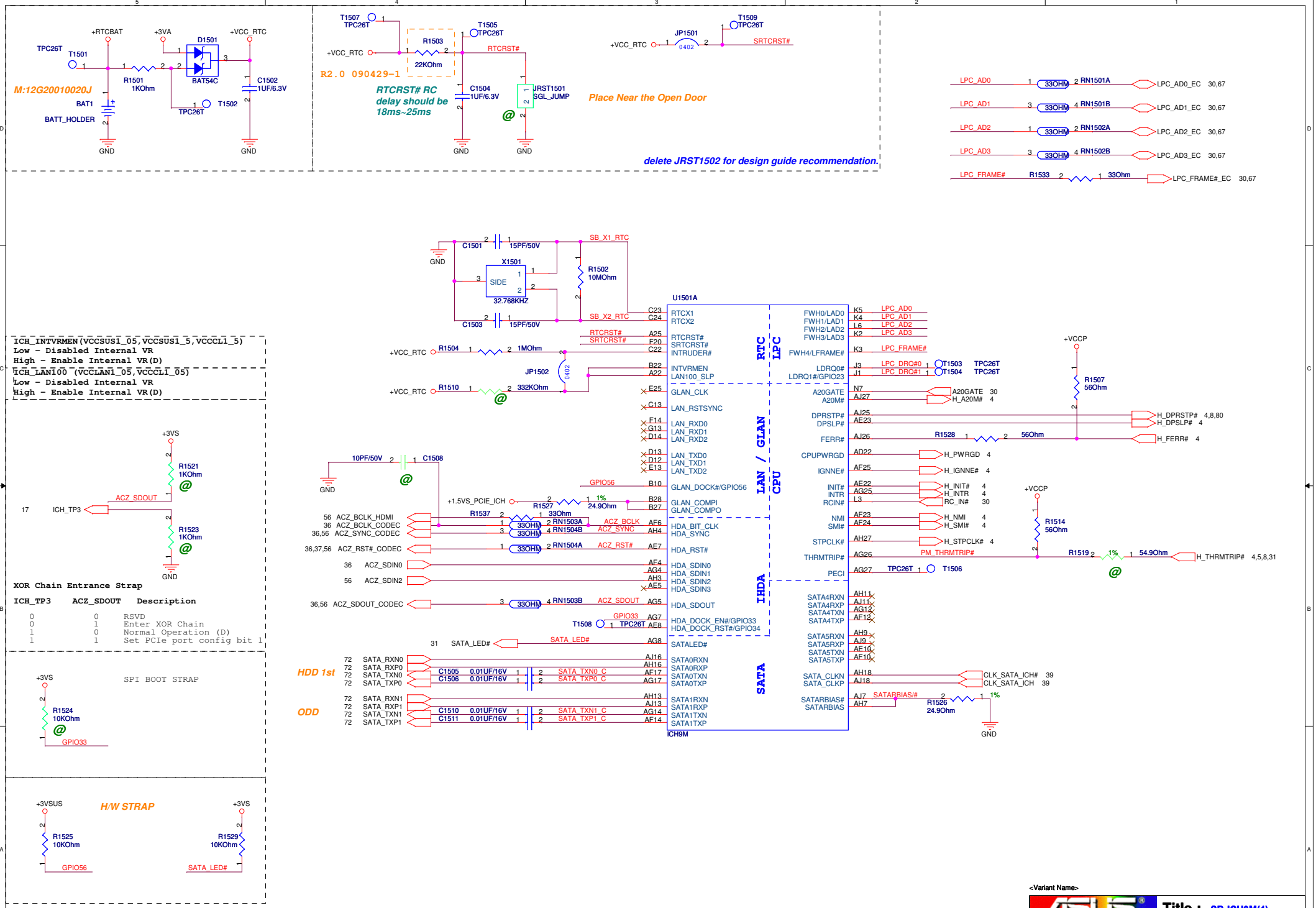

<Variant Name>

Title : SB-ICH9M(1)

ASUSTeK COMPUTER INC. NB1 Engineer: Leon

Size	Project Name	Rev
Custom	K70IJ	1.0

Date: Thursday, April 30, 2009 Sheet 15 of 96

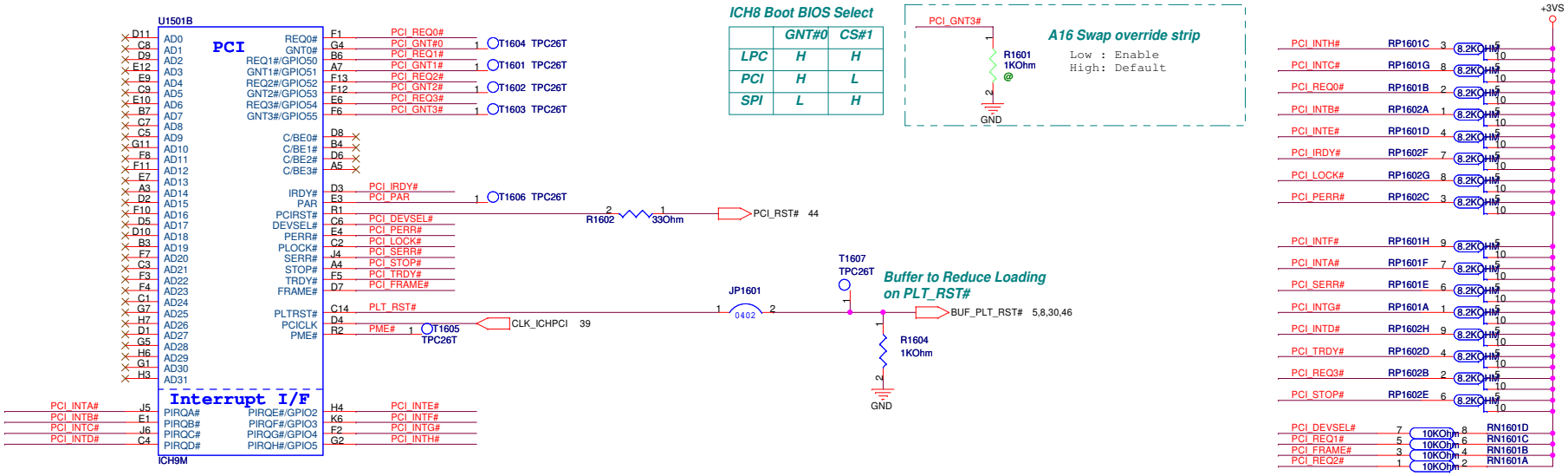

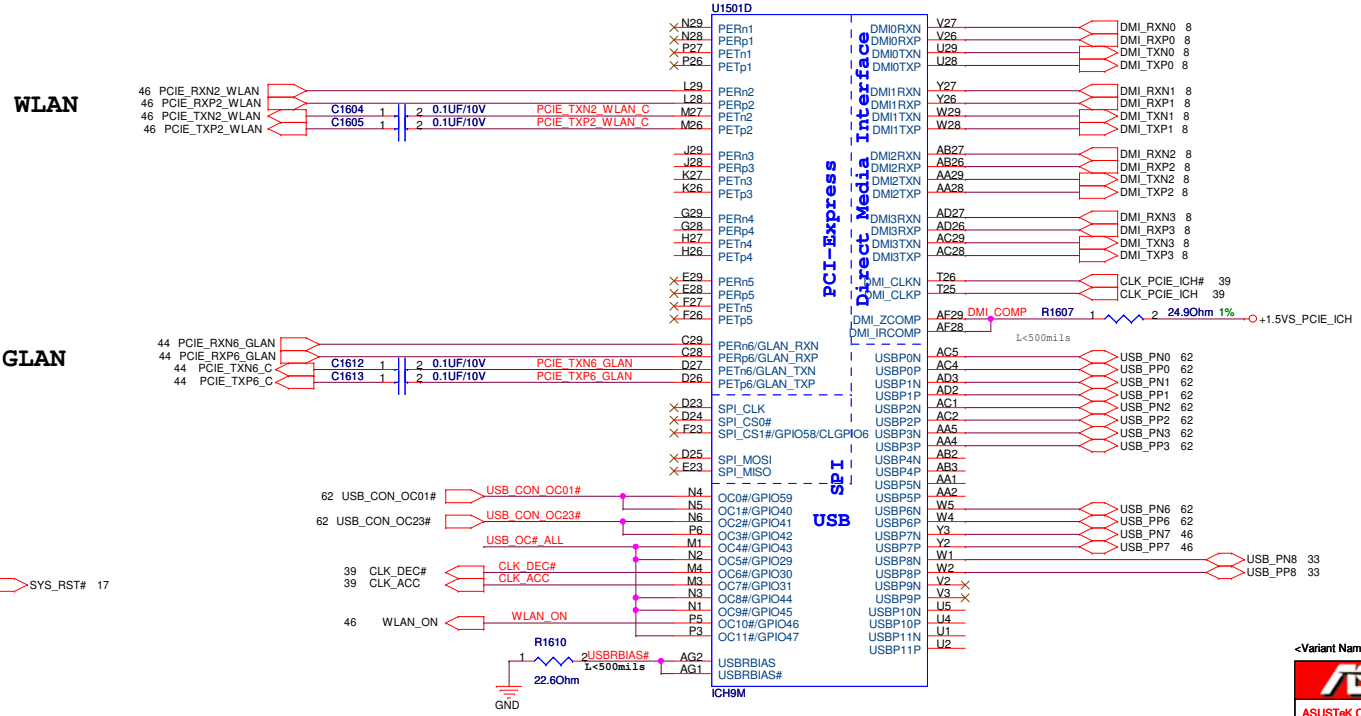

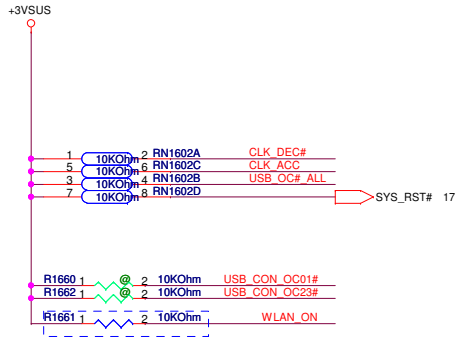

When supporting CLK GEN Turbo PIN, un-mount R1661.

USB 0	USB Conn.(M/B)
USB 1	USB Conn.(M/B)
USB 2	USB Conn.(M/B)
USB 3	USB Conn.(M/B)
USB 4	Reverse
USB 5	Reverse
USB 6	Card Reader
USB 7	WLAN
USB 8	CMOS Camera(D/B)
USB 9	Reverse
USB 10	Reverse
USB 11	Reverse

<Variant Name>

ASUSTeK COMPUTER INC. NB1

Title : SB-ICH9M(2)

Engineer: Leon

Size	Project Name	Rev
Custom	K70IJ	1.0

Date: Thursday, April 30, 2009 Sheet 16 of 96

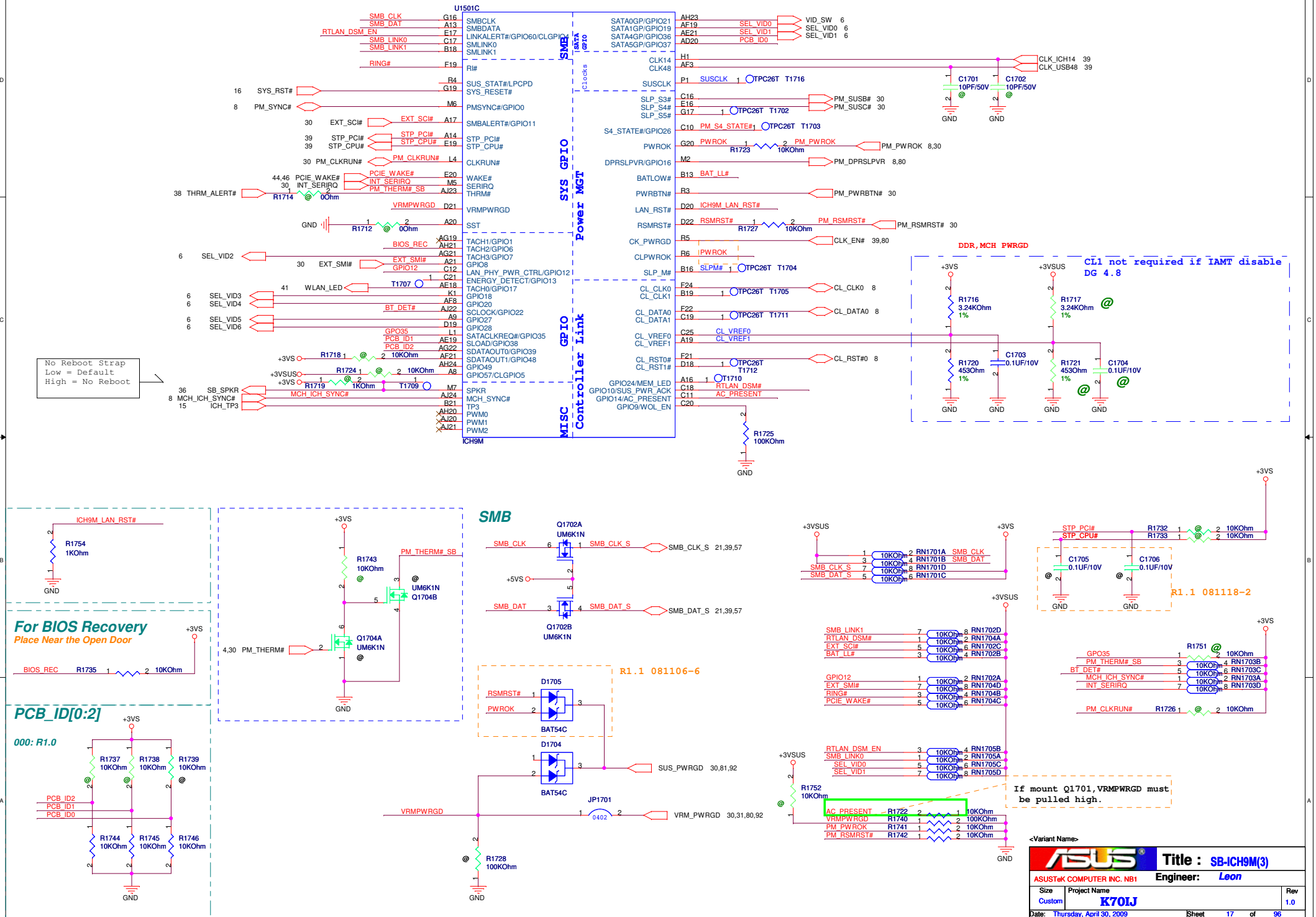
U1501C
ICH9M
SMB
SATA GPIO
Clocks
SYS GPIO
Power MGT
GPIO
Controller Link
MISC
SMBCLK
SMBDATA
LINKALERT#/GPIO60/CLGPIO4
SMLINK0
SMLINK1
RI#
SUS_STAT#/LPCPD
SYS_RESET#
PMSYNC#/GPIO0
SMBALERT#/GPIO11
STP_PCI#
STP_CPU#
CLKRUN#
WAKE#
SERIRQ
THRM#
VRMPWRGD
SST
TACH1/GPIO1
TACH2/GPIO6
TACH3/GPIO7
GPIO8
LAN_PHY_PWR_CTRL/GPIO12
ENERGY_DETECT/GPIO13
TACH0/GPIO17
GPIO18
GPIO20
SCLOCK/GPIO22
GPIO27
GPIO28
SATACLKREQ#/GPIO35
SLOAD/GPIO38
SDATAOUT0/GPIO39
SDATAOUT1/GPIO48
GPIO49
GPIO57/CLGPIO5
SPKR
MCH_SYNC#
TP3
PWM0
PWM1
PWM2
SATA0GP/GPIO21
SATA1GP/GPIO19
SATA4GP/GPIO36
SATA5GP/GPIO37
CLK14
CLK48
SUSCLK
SLP_S3#
SLP_S4#
SLP_S5#
S4_STATE#/GPIO26
PWROK
DPRSLPVR/GPIO16
BATLOW#
PWRBTN#
LAN_RST#
RSMRST#
CK_PWRGD
CLPWROK
SLP_M#
CL_CLK0
CL_CLK1
CL_DATA0
CL_DATA1
CL_VREF0
CL_VREF1
CL_RST0#
CL_RST1#
GPIO24/MEM_LED
GPIO10/SUS_PWR_ACK
GPIO14/AC_PRESENT
GPIO9/WOL_EN
SMB_CLK
SMB_DAT
RTLAN_DSM_EN
SMB_LINK0
SMB_LINK1
RING#
SYS_RST#
PM_SYNC#
EXT_SCI#
STP_PCI#
STP_CPU#
PM_CLKRUN#
PCIE_WAKE#
INT_SERIRQ
PM_THERM# SB
THRM_ALERT#
VRMPWRGD
BIOS_REC
SEL_VID2
EXT_SMI#
GPIO12
WLAN_LED
SEL_VID3
SEL_VID4
BT_DET#
SEL_VID5
SEL_VID6
GPO35
PCB_ID1
PCB_ID2
SB_SPKR
MCH_ICH_SYNC#
ICH_TP3
SEL_VID0
SEL_VID1
PCB_ID0
PM_SUSB#
PM_SUSC#
PM_S4_STATE#
PM_PWROK
PM_DPRSLPVR
BAT_LL#
PM_PWRBTN#
ICH9M_LAN_RST#
PM_RSMRST#
CLK_EN#
CL_CLK0
CL_DATA0
CL_VREF0
CL_VREF1
CL_RST#0
RTLAN_DSM#
AC_PRESENT
CLK_ICH14
CLK_USB48
SUSCLK
TPC26T T1716
TPC26T T1702
TPC26T T1703
TPC26T T1704
TPC26T T1705
TPC26T T1711
TPC26T T1712
T1710
T1707
T1709
R1723 10KOhm
R1727 10KOhm
R1714 0Ohm
R1712 0Ohm
R1718 10KOhm
R1724 10KOhm
R1719 1KOhm
C1701 10PF/50V
C1702 10PF/50V
GND
DDR,MCH PWRGD
CL1 not required if IAMT disable
DG 4.8
+3VS
+3VSUS
R1716 3.24KOhm 1%
R1717 3.24KOhm 1%
R1720 453Ohm 1%
R1721 453Ohm 1%
C1703 0.1UF/10V
C1704 0.1UF/10V
R1725 100KOhm
No Reboot Strap
Low = Default
High = No Reboot
ICH9M_LAN_RST#
R1754 1KOhm
For BIOS Recovery
Place Near the Open Door
BIOS_REC
R1735 10KOhm
PCB_ID[0:2]
000: R1.0
R1737 10KOhm
R1738 10KOhm
R1739 10KOhm
R1744 10KOhm
R1745 10KOhm
R1746 10KOhm
R1743 10KOhm
PM_THERM# SB
UM6K1N
Q1704B
Q1704A
UM6K1N
4,30 PM_THERM#
SMB
Q1702A
UM6K1N
Q1702B
UM6K1N
SMB_CLK
SMB_DAT
SMB_CLK_S
SMB_DAT_S
SMB_CLK_S 21,39,57
SMB_DAT_S 21,39,57
R1.1 081106-6
D1705
BAT54C
D1704
BAT54C
RSMRST#
PWROK
SUS_PWRGD 30,81,92
VRMPWRGD
JP1701
0402
VRM_PWRGD 30,31,80,92
R1728 100KOhm
RN1701A
RN1701B
RN1701D
RN1701C
RN1702D
RN1704A
RN1702C
RN1702B
RN1702A
RN1704D
RN1704B
RN1704C
RN1705B
RN1705A
RN1705C
RN1705D
SMB_LINK1
RTLAN_DSM#
EXT_SCI#
BAT_LL#
GPIO12
EXT_SMI#
RING#
PCIE_WAKE#
RTLAN_DSM_EN
SMB_LINK0
SEL_VID0
SEL_VID1
R1752 10KOhm
R1722 10KOhm
R1740 100KOhm
R1741 10KOhm
R1742 10KOhm
If mount Q1701,VRMPWRGD must be pulled high.
R1732 10KOhm
R1733 10KOhm
C1705 0.1UF/10V
C1706 0.1UF/10V
R1.1 081118-2
R1751
GPO35
PM_THERM# SB
BT_DET#
MCH_ICH_SYNC#
INT_SERIRQ
RN1703B
RN1703C
RN1703A
RN1703D
PM_CLKRUN#
R1726 10KOhm
<Variant Name>
Title : SB-ICH9M(3)
ASUSTeK COMPUTER INC. NB1
Engineer: Leon
Size Custom
Project Name K70IJ
Rev 1.0
Date: Thursday, April 30, 2009
Sheet 17 of 96

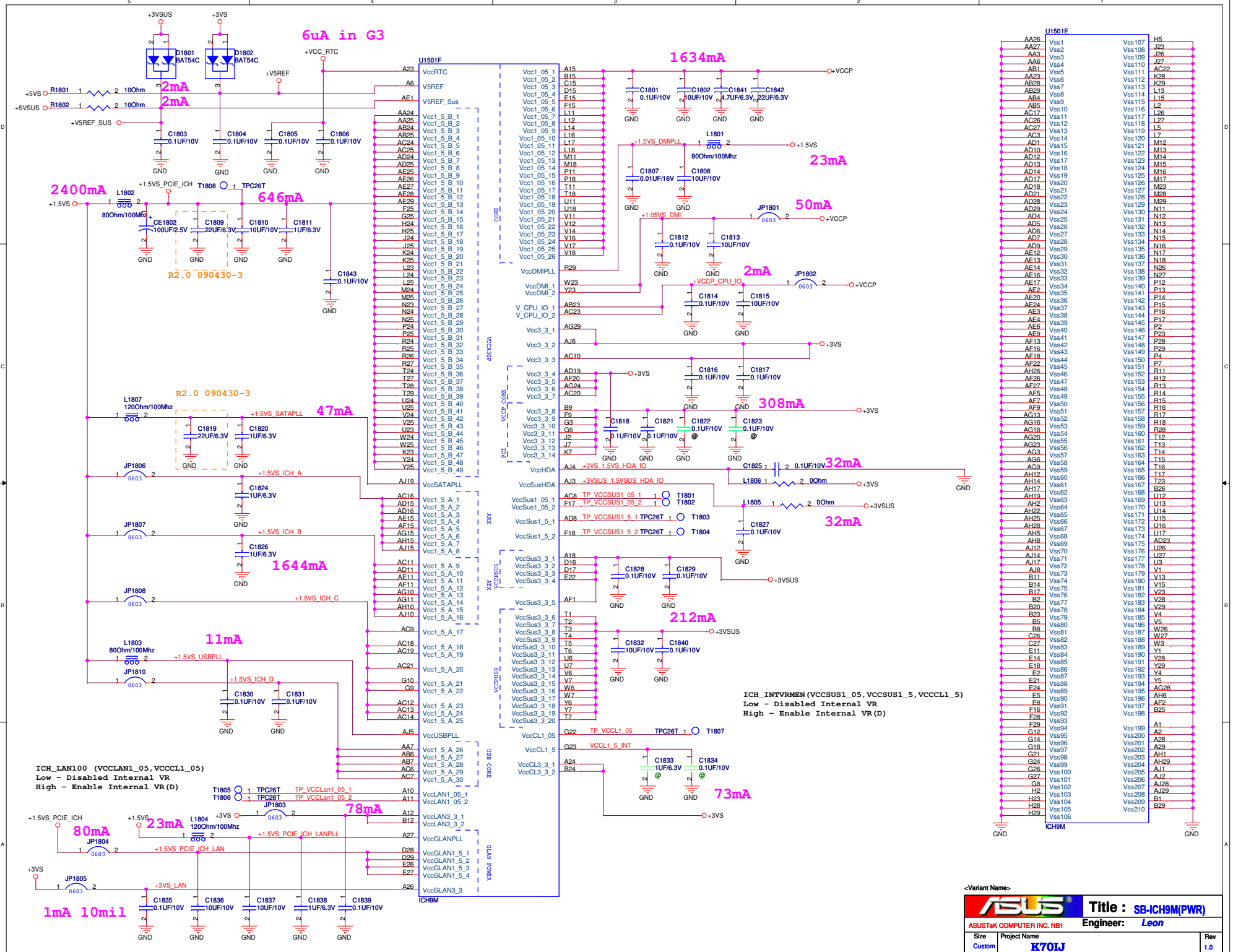
6uA in G3
2mA
2mA
2400mA
646mA
R2.0 090430-3
47mA
R2.0 090430-3
1644mA
11mA
ICH_LAN100 (VCCLAN1_05,VCCCL1_05)
Low - Disabled Internal VR
High - Enable Internal VR(D)
80mA
23mA
78mA
1mA 10mil
1634mA
23mA
50mA
2mA
308mA
32mA
32mA
212mA
73mA
ICH_INTVRMEN(VCCSUS1_05,VCCSUS1_5,VCCCL1_5)
Low - Disabled Internal VR
High - Enable Internal VR(D)
U1501F
ICH9M
U1501E
ICH9M
Title : SB-ICH9M(PWR)
ASUSTeK COMPUTER INC. NB1
Engineer: Leon
Size Custom
Project Name K70IJ
Rev 1.0
Date: Thursday, April 30, 2009
Sheet 18 of 96

<Variant Name>

ASUSTeK COMPUTER INC	Title : Schematic page name		
	Engineer: Leon		
Size: Custom	Project Name: K70IJ		Rev: 1.0
Date: Wednesday, April 29, 2009	Sheet 19 of 96		

<Variant Name>

ASUSTeK COMPUTER INC. NB1	Title : DDR2 SO-DIMM0	
	Engineer: Leon	
Size A3	Project Name K70IJ	Rev 1.0
Date: Wednesday, April 29, 2009	Sheet 20 of 96	

DDR2 200P H=9.2mm (Reverse Type)

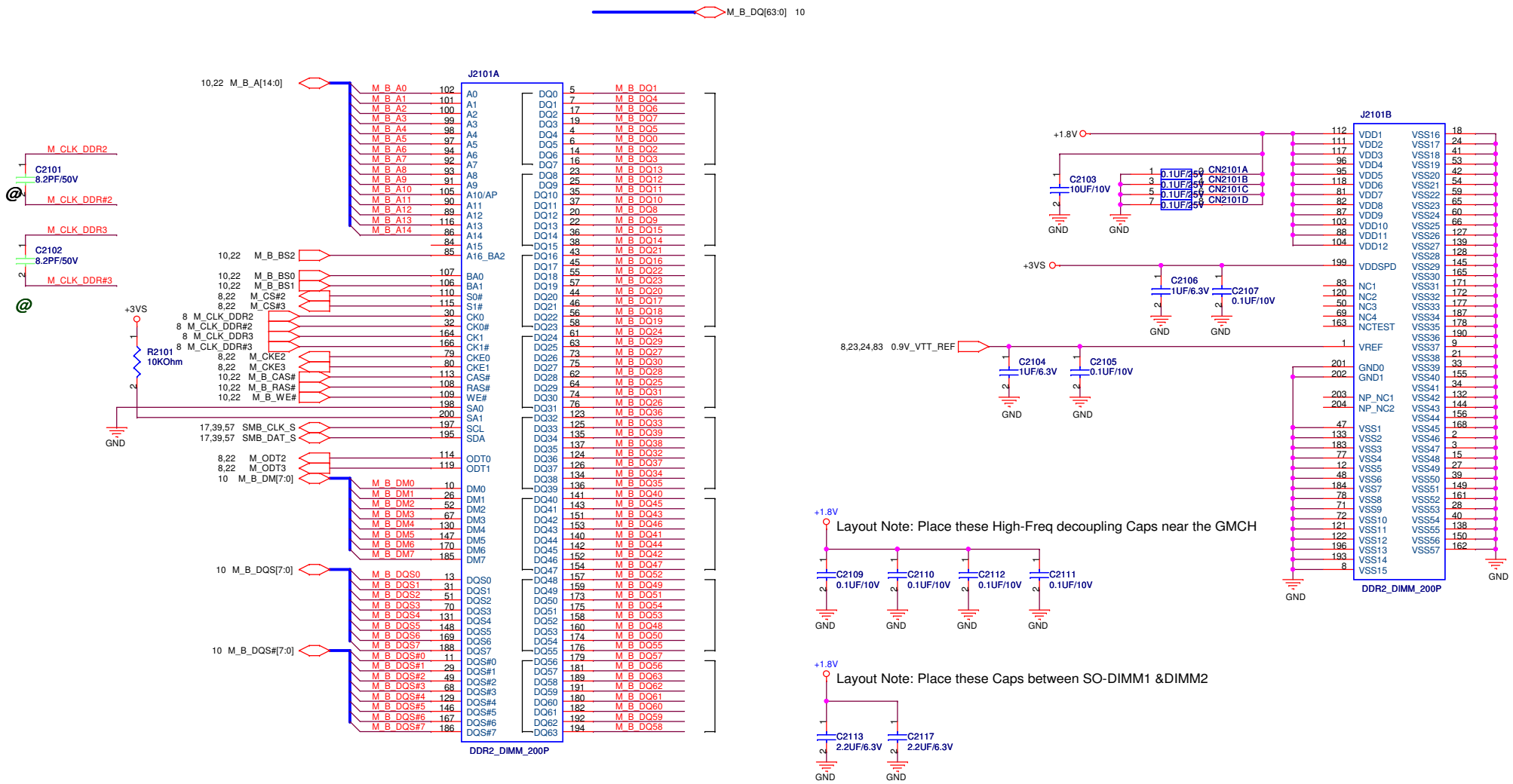

<Variant Name>

ASUSTeK COMPUTER INC. NB1	Title : DDR2 SO-DIMM1	
	Engineer: Leon	
Size: Custom	Project Name: K70IJ	Rev: 1.0
Date: Thursday, April 30, 2009	Sheet 21 of 96	

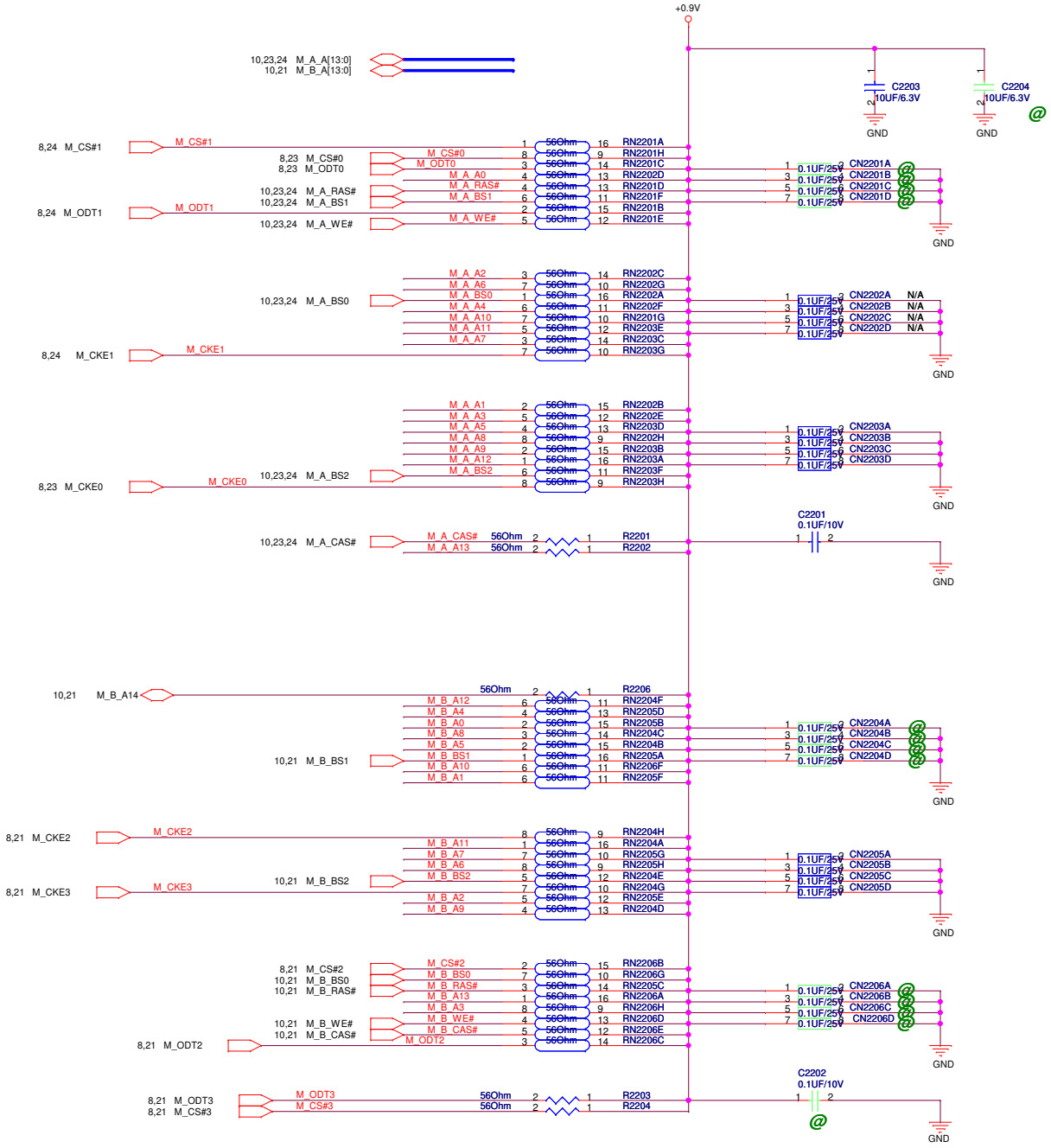

<Variant Name>

ASUS	Title : DDR2 TERMINATION		
ASUSTeK COMPUTER INC. NB1	Engineer: Leon		
Size: Custom	Project Name: K70IJ		Rev: 1.0
Date: Thursday, April 30, 2009	Sheet 22 of 96		

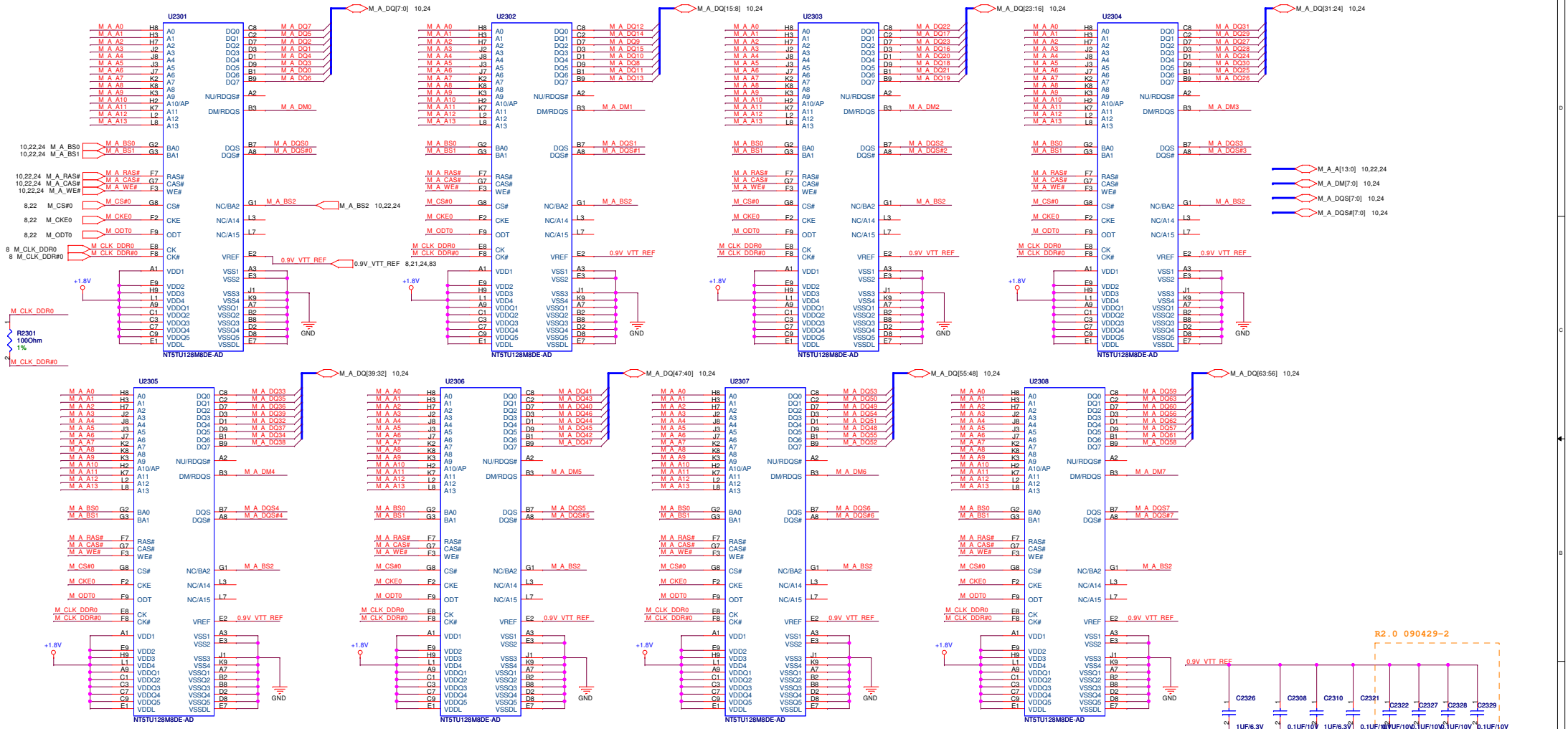
U2301
U2302
U2303
U2304
U2305
U2306
U2307
U2308
NT5TU128M8DE-AD
M_A_DQ[7:0] 10,24
M_A_DQ[15:8] 10,24
M_A_DQ[23:16] 10,24
M_A_DQ[31:24] 10,24
M_A_DQ[39:32] 10,24
M_A_DQ[47:40] 10,24
M_A_DQ[55:48] 10,24
M_A_DQ[63:56] 10,24
M_A_A[13:0] 10,22,24
M_A_DM[7:0] 10,24
M_A_DQS[7:0] 10,24
M_A_DQS#[7:0] 10,24
M_A_BS2 10,22,24
0.9V_VTT_REF 8,21,24,83
R2301
100Ohm
1%
M_CLK_DDR0
M_CLK_DDR#0
+1.8V
GND
R2.0 090429-2
C2326 1UF/6.3V
C2308 0.1UF/10V
C2310 1UF/6.3V
C2321 0.1UF/10V
C2322 0.1UF/10V
C2327 0.1UF/10V
C2328 0.1UF/10V
C2329 0.1UF/10V
Layout Note: Place these Caps near On-board memory
C2306 2.2UF/6.3V
C2307 2.2UF/6.3V
C2309 2.2UF/6.3V
C2320 10UF/10V N/A
C2318 0.1UF/10V
C2319 0.1UF/10V
C2301 0.1UF/10V
C2302 0.1UF/10V
C2304 0.1UF/10V
C2311 0.1UF/10V
C2313 0.1UF/10V
C2314 0.1UF/10V
C2316 0.1UF/10V
C2317 0.1UF/10V
C2303 0.1UF/10V
C2305 0.1UF/10V
C2312 0.1UF/10V
C2315 0.1UF/10V
C2323 0.1UF/10V
C2324 0.1UF/10V
C2325 0.1UF/10V
CN2301A
CN2301B
CN2301C
CN2301D
<Variant Name>
Title : Schematic page name
ASUSTeK COMPUTER INC
Engineer: Leon
Size Custom
Project Name K70IJ
Rev 1.0
Date: Thursday, April 30, 2009
Sheet 23 of 96

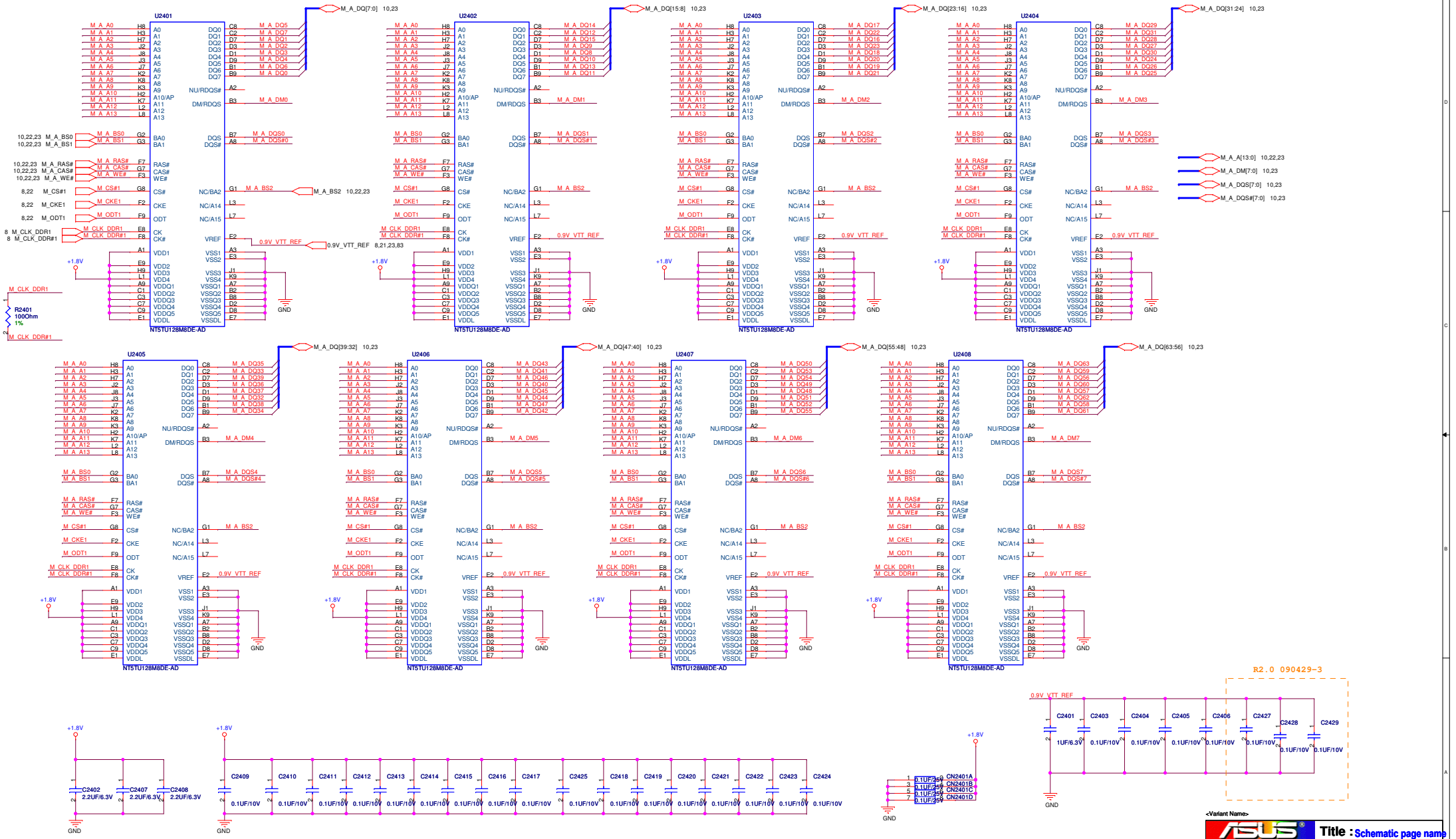
U2401
U2402
U2403
U2404
U2405
U2406
U2407
U2408
NT5TU128M8DE-AD
M_A_DQ[7:0] 10,23
M_A_DQ[15:8] 10,23
M_A_DQ[23:16] 10,23
M_A_DQ[31:24] 10,23
M_A_DQ[39:32] 10,23
M_A_DQ[47:40] 10,23
M_A_DQ[55:48] 10,23
M_A_DQ[63:56] 10,23
M_A_A[13:0] 10,22,23
M_A_DM[7:0] 10,23
M_A_DQS[7:0] 10,23
M_A_DQS#[7:0] 10,23
M_A_BS2 10,22,23
0.9V_VTT_REF 8,21,23,83
R2401
100Ohm
1%
+1.8V
GND
R2.0 090429-3
C2401 1UF/6.3V
C2402 2.2UF/6.3V
C2403 0.1UF/10V
C2404 0.1UF/10V
C2405 0.1UF/10V
C2406 0.1UF/10V
C2407 2.2UF/6.3V
C2408 2.2UF/6.3V
C2409 0.1UF/10V
C2410 0.1UF/10V
C2411 0.1UF/10V
C2412 0.1UF/10V
C2413 0.1UF/10V
C2414 0.1UF/10V
C2415 0.1UF/10V
C2416 0.1UF/10V
C2417 0.1UF/10V
C2425 0.1UF/10V
C2418 0.1UF/10V
C2419 0.1UF/10V
C2420 0.1UF/10V
C2421 0.1UF/10V
C2422 0.1UF/10V
C2423 0.1UF/10V
C2424 0.1UF/10V
C2427 0.1UF/10V
C2428 0.1UF/10V
C2429 0.1UF/10V
CN2401A 0.1UF/25V
CN2401B 0.1UF/25V
CN2401C 0.1UF/25V
CN2401D 0.1UF/25V
<Variant Name>
ASUS
Title : Schematic page name
ASUSTek COMPUTER INC
Engineer: Leon
Size Custom
Project Name K70IJ
Rev 1.0
Date: Thursday, April 30, 2009
Sheet 24 of 96

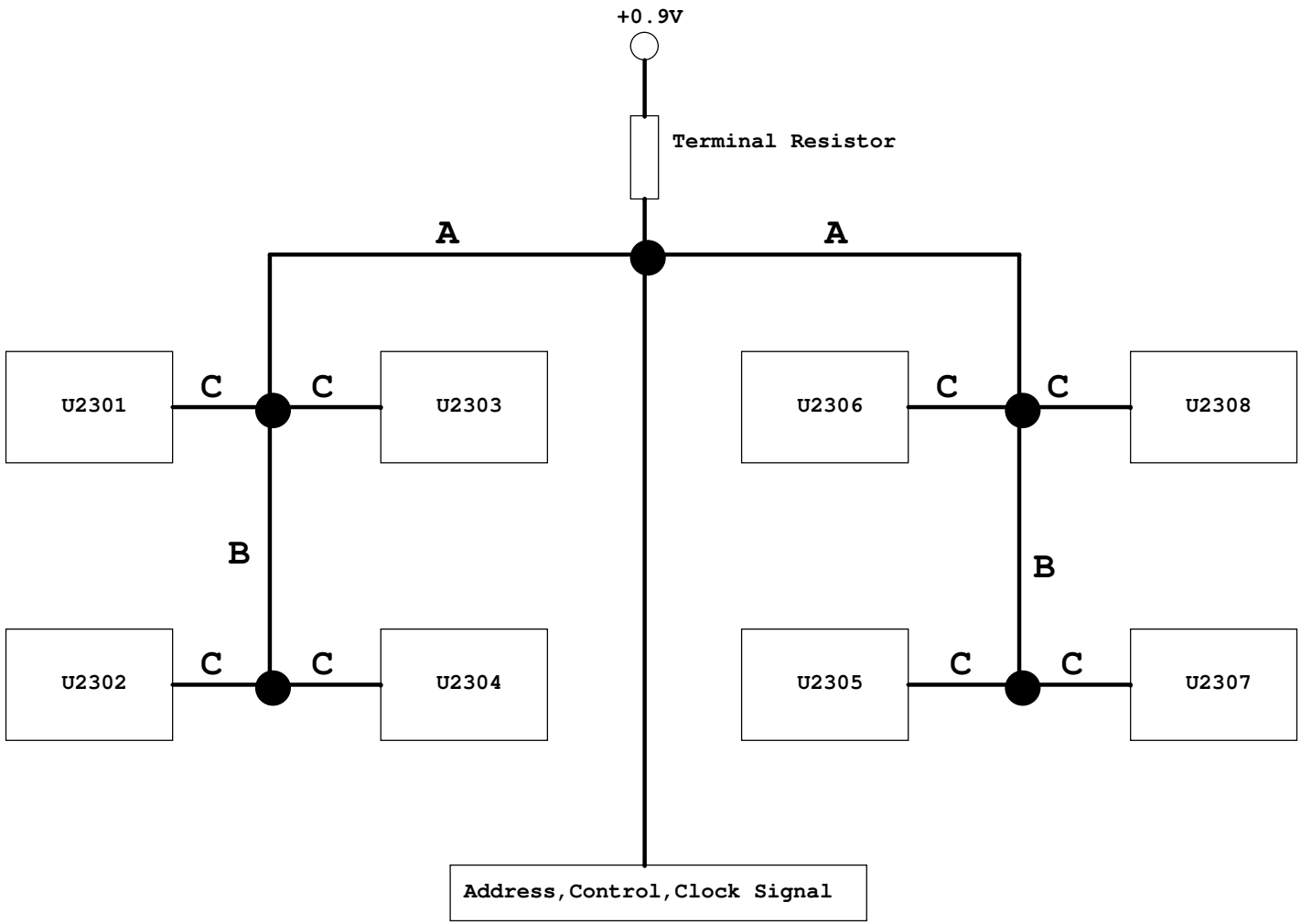

<Variant Name>

ASUS	Title : Schematic page name	
ASUSTek COMPUTER INC	Engineer: Leon	
Size: Custom	Project Name: K70IJ	Rev: 1.0
Date: Wednesday, April 29, 2009	Sheet 25 of 96	

<Variant Name>

ASUSTek COMPUTER INC	Title : Schematic page name	
	Engineer: Leon	
Size: Custom	Project Name: K70IJ	Rev: 1.0
Date: Wednesday, April 29, 2009	Sheet 26 of 96	

<Variant Name>

ASUSTek COMPUTER INC	Title : Schematic page name		
	Engineer: Leon		
Size: Custom	Project Name: K70IJ		Rev: 1.0
Date: Wednesday, April 29, 2009	Sheet 27 of 96		

<Variant Name>

ASUSTek COMPUTER INC	Title : Schematic page name		
	Engineer: Leon		
Size: Custom	Project Name: K70IJ		Rev: 1.0
Date: Wednesday, April 29, 2009	Sheet 28 of 96		

<Variant Name>

ASUSTek COMPUTER INC	Title : N/A	
	Engineer: Leon	
Size: Custom	Project Name: K70IJ	Rev: 1.0
Date: Wednesday, April 29, 2009	Sheet 29 of 96	

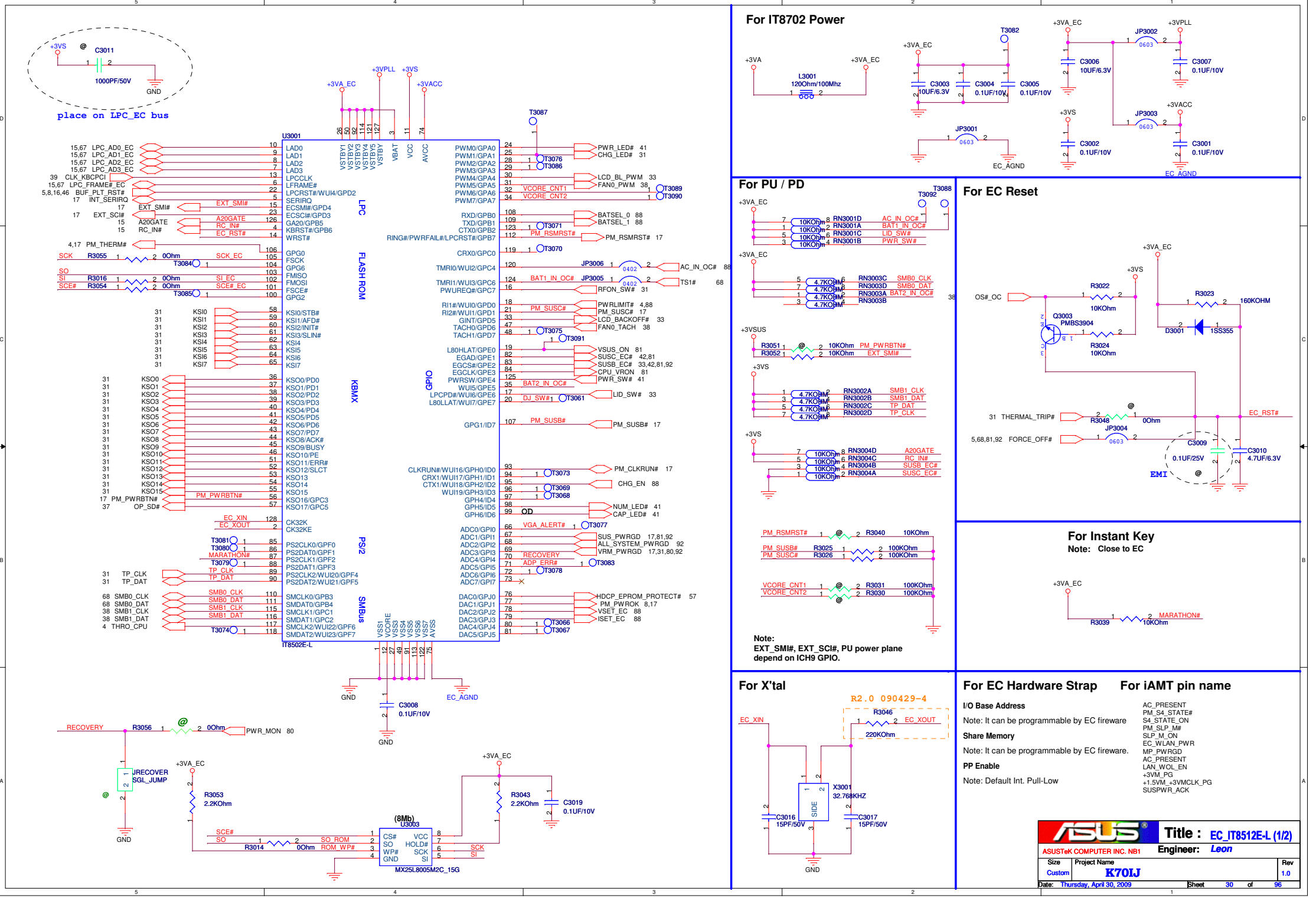
place on LPC_EC bus
U3001
IT8502E-L
LPC
FLASH ROM
KBMX
GPIO
PS/2
SMBus
For IT8702 Power
For PU / PD
For EC Reset
For Instant Key
Note: Close to EC
For X'tal
For EC Hardware Strap
For iAMT pin name
I/O Base Address
Note: It can be programmable by EC fireware
Share Memory
Note: It can be programmable by EC fireware.
PP Enable
Note: Default Int. Pull-Low
AC_PRESENT
PM_S4_STATE#
S4_STATE_ON
PM_SLP_M#
SLP_M_ON
EC_WLAN_PWR
MP_PWRGD
AC_PRESENT
LAN_WOL_EN
+3VM_PG
+1.5VM_+3VMCLK_PG
SUSPWR_ACK
Note:
EXT_SMI#, EXT_SCI#, PU power plane depend on ICH9 GPIO.
(8Mb)
U3003
MX25L8005M2C_15G
R2.0 090429-4
X3001
32.768KHZ
Title : EC_IT8512E-L (1/2)
ASUSTeK COMPUTER INC. NB1
Engineer: Leon
Size Custom
Project Name K70IJ
Rev 1.0
Date: Thursday, April 30, 2009
Sheet 30 of 96

TouchPad & FingerPrint

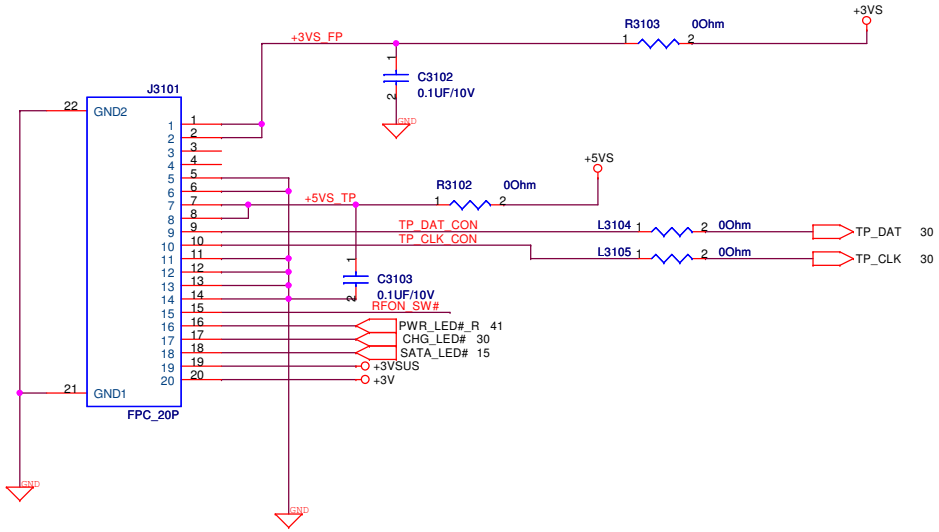

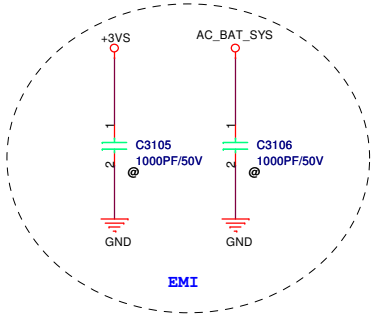

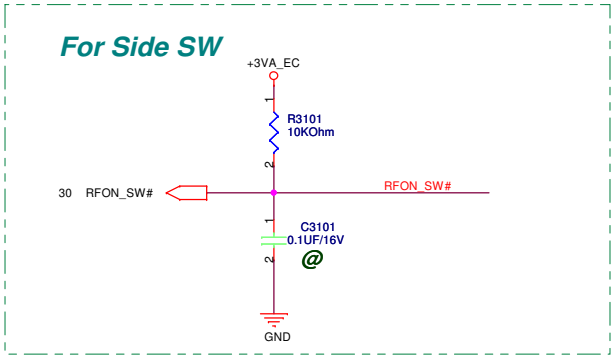

Keyboard Connector

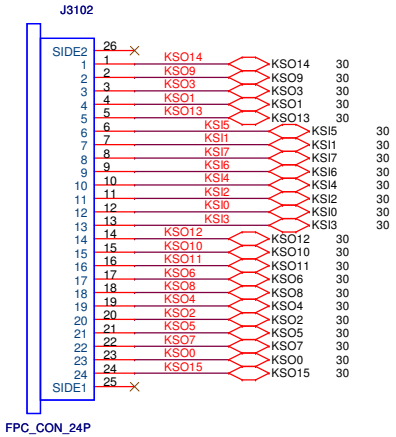

For Thermal Control Method

Remove redundant components

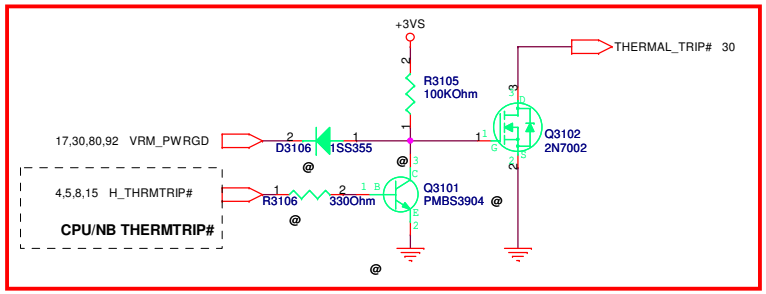

ASUSTeK COMPUTER INC. NB1	Title : EC_IT8752(2/2)		
	Engineer: Leon		
Size: Custom	Project Name: K70IJ		Rev: 1.0
Date: Thursday, April 30, 2009	Sheet 31 of 96		

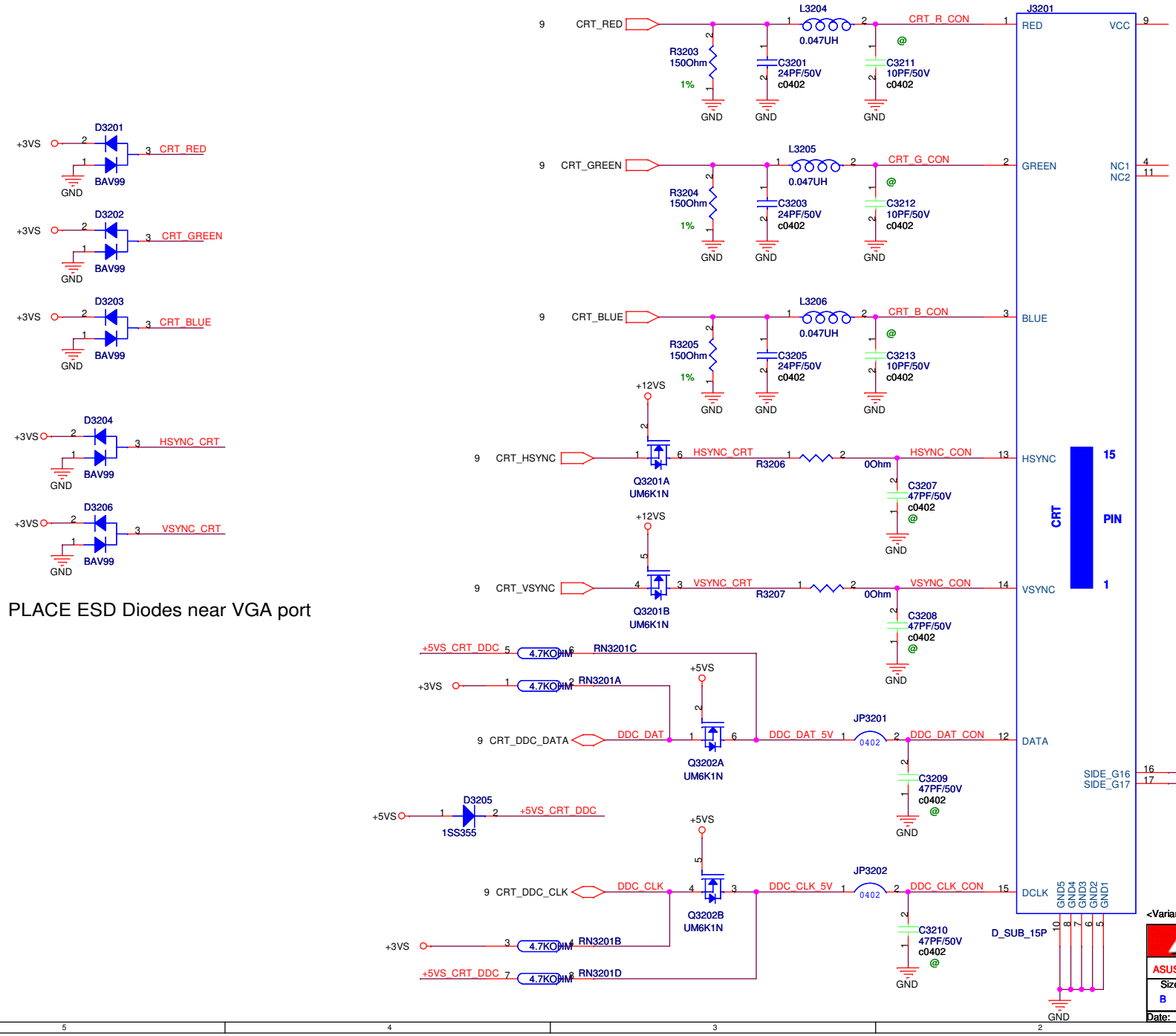

PLACE ESD Diodes near VGA port

<Variant Name>

ASUSTeK COMPUTER INC

Title : CRT

Engineer: Leon

Size	Project Name	Rev
B	K70IJ	1.0

Date: Thursday, April 30, 2009 Sheet 32 of 96

LCD Power

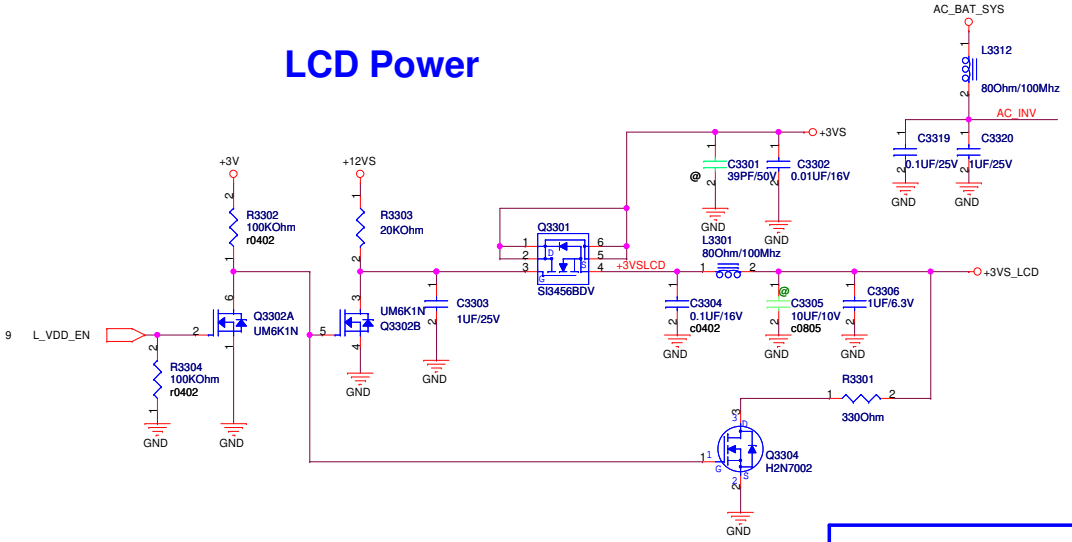

LED PANEL LVDS Interface

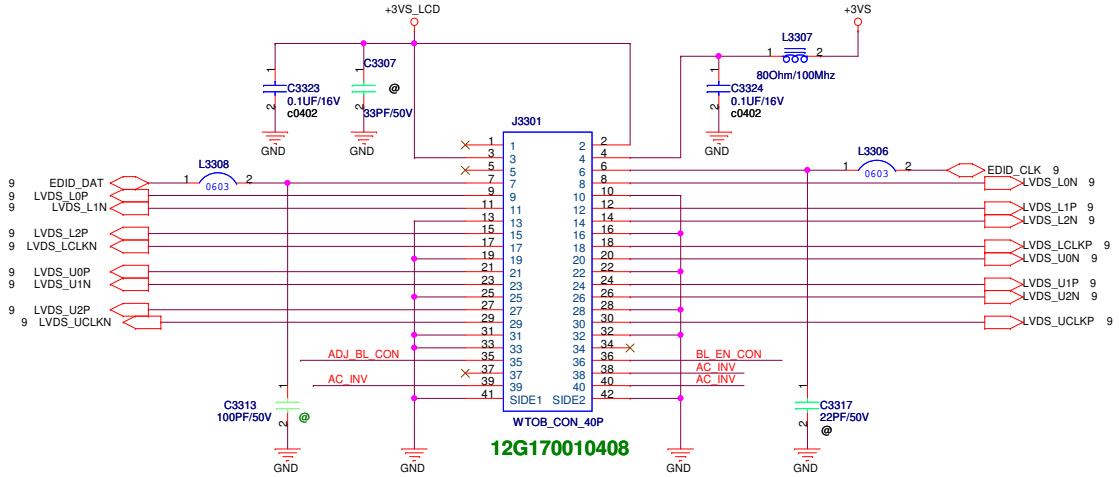

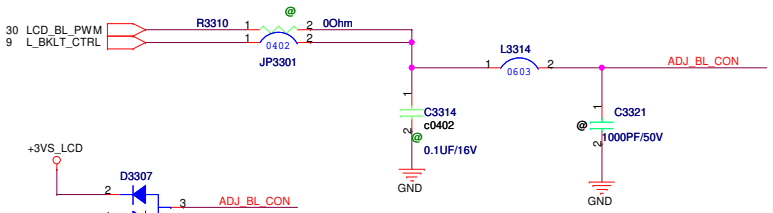

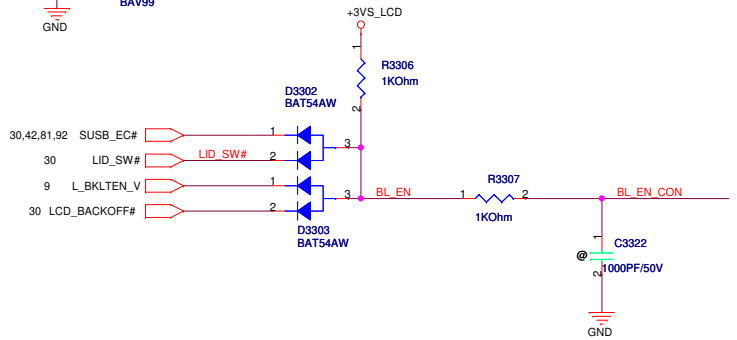

CAMERA & MIC

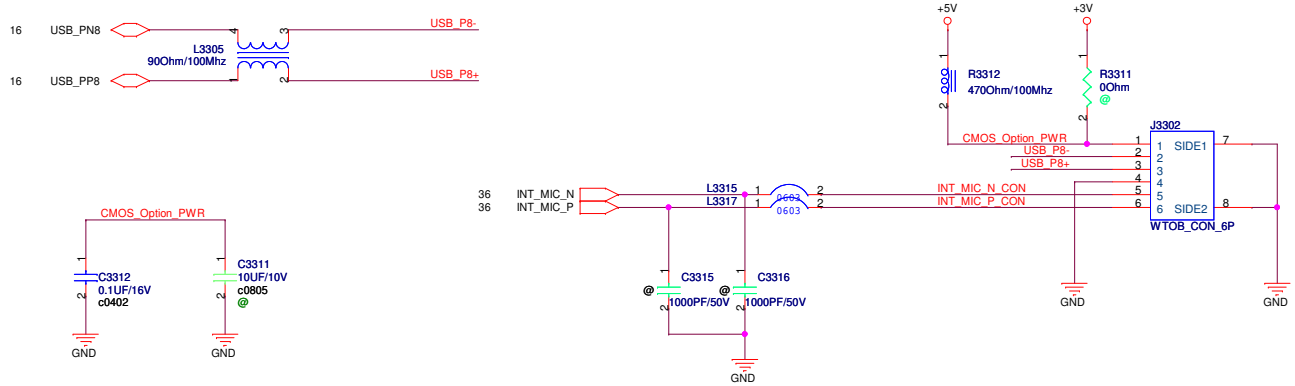

Hall effect switch

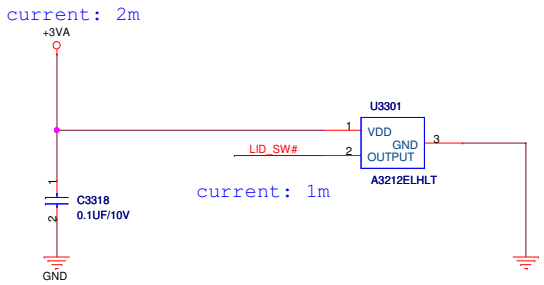

<Variant Name>

ASUSTeK COMPUTER INC	Title : LVDS & INVERTER	
	Engineer: Leon	
Size: Custom	Project Name: K70IJ	Rev: 1.0
Date: Thursday, April 30, 2009	Sheet 33 of 96	

For Bluetooth

<Variant Name>

Title : N/A

ASUSTek COMPUTER INC

Engineer: Leon

Size	Project Name	Rev
A	K70IJ	1.0

Date: Wednesday, April 29, 2009 Sheet 35 of 96

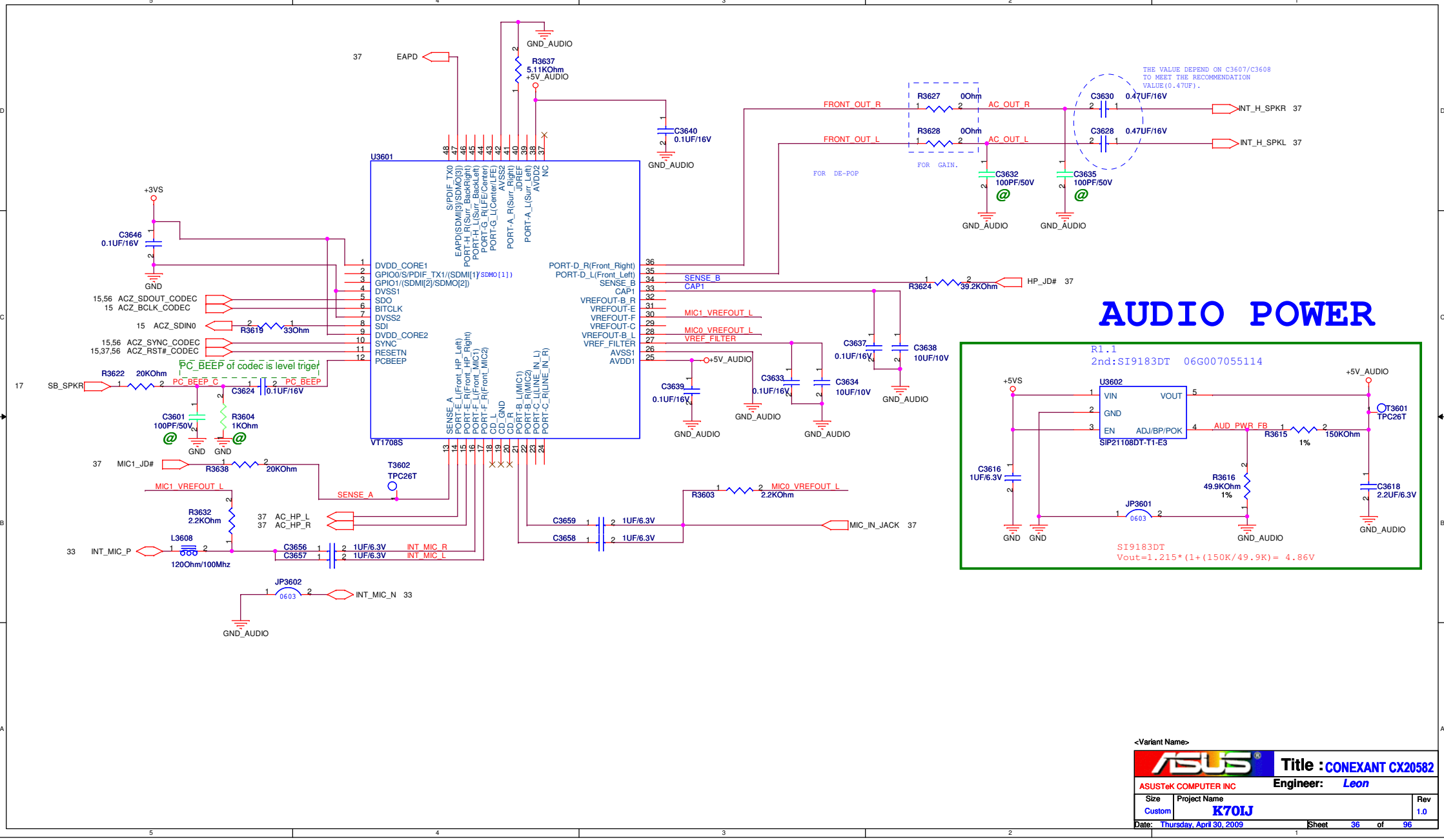
AUDIO POWER
U3601
VT1708S
DVDD_CORE1
GPIO0/S/PDIF_TX1/(SDMI[1]/SDMO[1])
GPIO1/(SDMI[2]/SDMO[2])
DVSS1
SDO
BITCLK
DVSS2
SDI
DVDD_CORE2
SYNC
RESETN
PCBEEP
PORT-D_R(Front_Right)
PORT-D_L(Front_Left)
SENSE_B
CAP1
VREFOUT-B_R
VREFOUT-E
VREFOUT-F
VREFOUT-C
VREFOUT-B_L
VREF_FILTER
AVSS1
AVDD1
SENSE_A
PORT-E_L(Front_HP_Left)
PORT-E_R(Front_HP_Right)
PORT-F_L(Front_MIC1)
PORT-F_R(Front_MIC2)
CD_L
CD_GND
CD_R
PORT-B_L(MIC1)
PORT-B_R(MIC2)
PORT-C_L(LINE_IN_L)
PORT-C_R(LINE_IN_R)
S/PDIF_TX0
EAPD(SDMI[3]/SDMO[3])
PORT-H_R(Surr_Back/Right)
PORT-H_L(Surr_Back/Left)
PORT-G_R(LFE/Center)
PORT-G_L(Center/LFE)
AVSS2
PORT-A_R(Surr_Right)
JDREF
PORT-A_L(Surr_Left)
AVDD2
NC
EAPD
GND_AUDIO
R3637 5.11KOhm
+5V_AUDIO
C3640 0.1UF/16V
FRONT_OUT_R
FRONT_OUT_L
R3627 0Ohm
R3628 0Ohm
AC_OUT_R
AC_OUT_L
FOR GAIN.
FOR DE-POP
C3632 100PF/50V
C3635 100PF/50V
THE VALUE DEPEND ON C3607/C3608
TO MEET THE RECOMMENDATION
VALUE(0.47UF).
C3630 0.47UF/16V
C3628 0.47UF/16V
INT_H_SPKR 37
INT_H_SPKL 37
+3VS
C3646 0.1UF/16V
GND
15,56 ACZ_SDOUT_CODEC
15 ACZ_BCLK_CODEC
15 ACZ_SDIN0
R3619 33Ohm
15,56 ACZ_SYNC_CODEC
15,37,56 ACZ_RST#_CODEC
PC_BEEP of codec is level triger
R3622 20KOhm
17 SB_SPKR
PC_BEEP_C
PC_BEEP
C3624 0.1UF/16V
C3601 100PF/50V
R3604 1KOhm
37 MIC1_JD#
R3638 20KOhm
T3602 TPC26T
MIC1_VREFOUT_L
SENSE_A
R3632 2.2KOhm
37 AC_HP_L
37 AC_HP_R
33 INT_MIC_P
L3608 120Ohm/100Mhz
C3656 1UF/6.3V
C3657 1UF/6.3V
INT_MIC_R
INT_MIC_L
JP3602 0603
INT_MIC_N 33
SENSE_B
CAP1
R3624 39.2KOhm
HP_JD# 37
MIC1_VREFOUT_L
MIC0_VREFOUT_L
VREF_FILTER
+5V_AUDIO
C3637 0.1UF/16V
C3638 10UF/10V
C3639 0.1UF/16V
C3633 0.1UF/16V
C3634 10UF/10V
R3603 2.2KOhm
MIC0_VREFOUT_L
C3659 1UF/6.3V
C3658 1UF/6.3V
MIC_IN_JACK 37
R1.1
2nd:SI9183DT 06G007055114
U3602
VIN
GND
EN
VOUT
ADJ/BP/POK
SIP21108DT-T1-E3
+5VS
+5V_AUDIO
AUD_PWR_FB
R3615 150KOhm 1%
T3601 TPC26T
C3616 1UF/6.3V
R3616 49.9KOhm 1%
JP3601 0603
C3618 2.2UF/6.3V
SI9183DT
Vout=1.215*(1+(150K/49.9K)= 4.86V
<Variant Name>
Title : CONEXANT CX20582
ASUSTeK COMPUTER INC
Engineer: Leon
Size Custom
Project Name K70IJ
Rev 1.0
Date: Thursday, April 30, 2009
Sheet 36 of 96

HP CONN

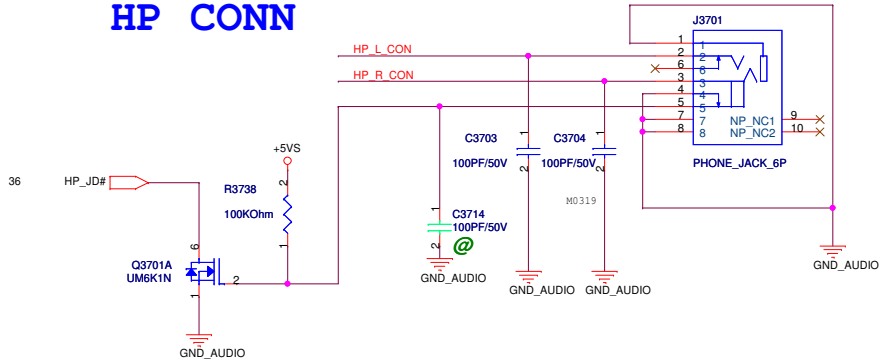

External MIC CONN

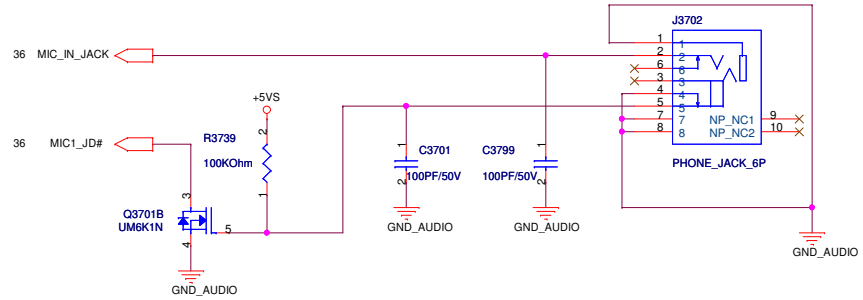

MUTE CONTROL

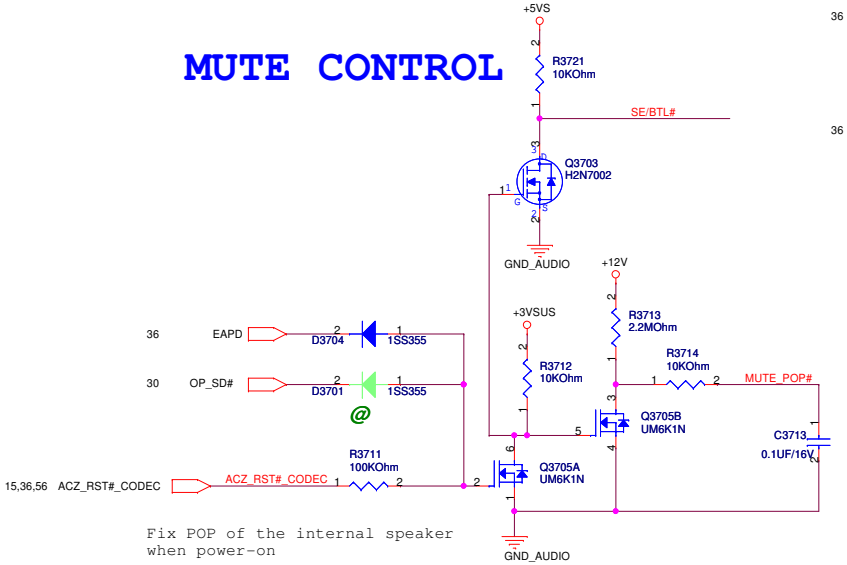

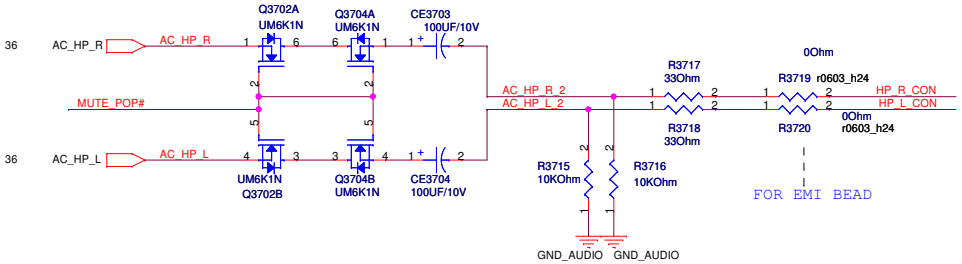

SPEAKER CONNECTOR(2W)

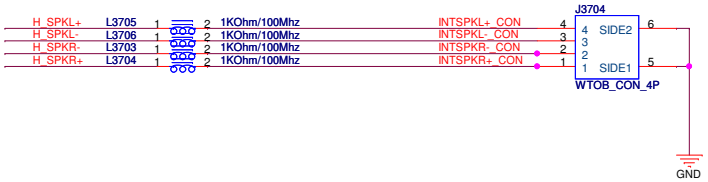

SPEAKER AMP

GAIN0	GAIN1	Av(inv)
0	0	6 dB
0	1	10 dB
1	0	15.6 dB
1	1	21.6 dB

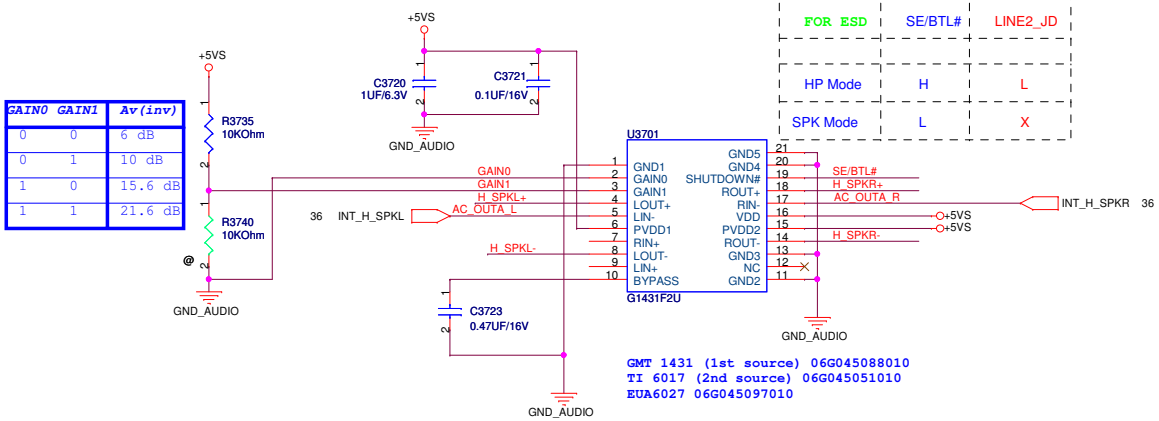

FOR ESD	SE/BTL#	LINE2_JD
HP Mode	H	L
SPK Mode	L	X

GMT 1431 (1st source) 06G045088010
TI 6017 (2nd source) 06G045051010
EUA6027 06G045097010

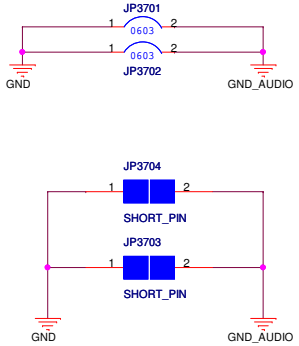

ASUSTeK COMPUTER INC. NB1	Title : AUDIO HP/MIC		
	Engineer: Leon		
Size: Custom	Project Name: K70IJ		Rev: 1.0
Date: Thursday, April 30, 2009	Sheet 37 of 96		

Thermal Sensor

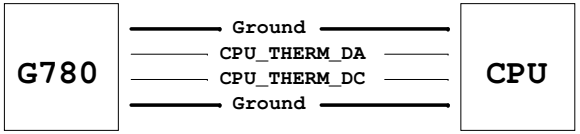

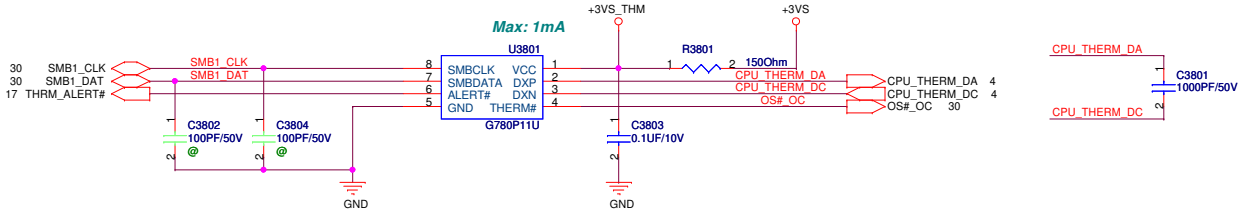

add 2nd source :06G023096010

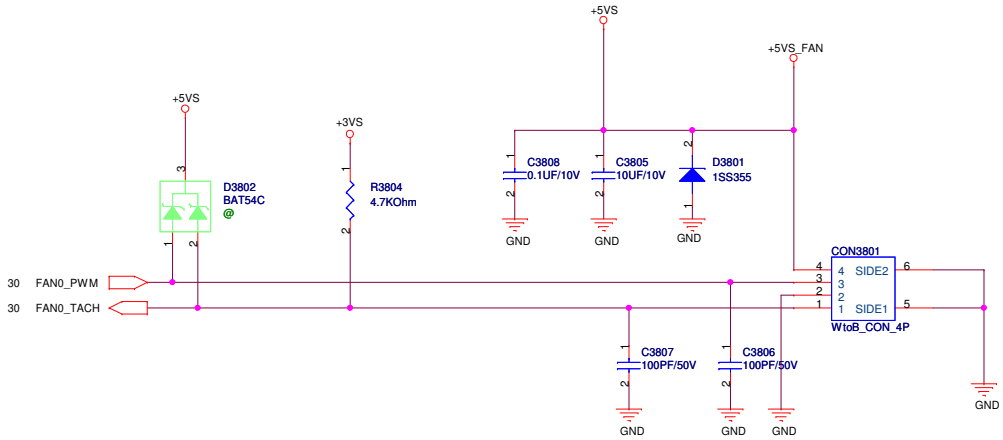

<Variant Name>

ASUS	Title : THER SENSOR & FAN	
ASUSTeK COMPUTER INC. NB1	Engineer: Leon	
Size: Custom	Project Name: K70IJ	Rev: 1.0
Date: Thursday, April 30, 2009	Sheet 38 of 96	

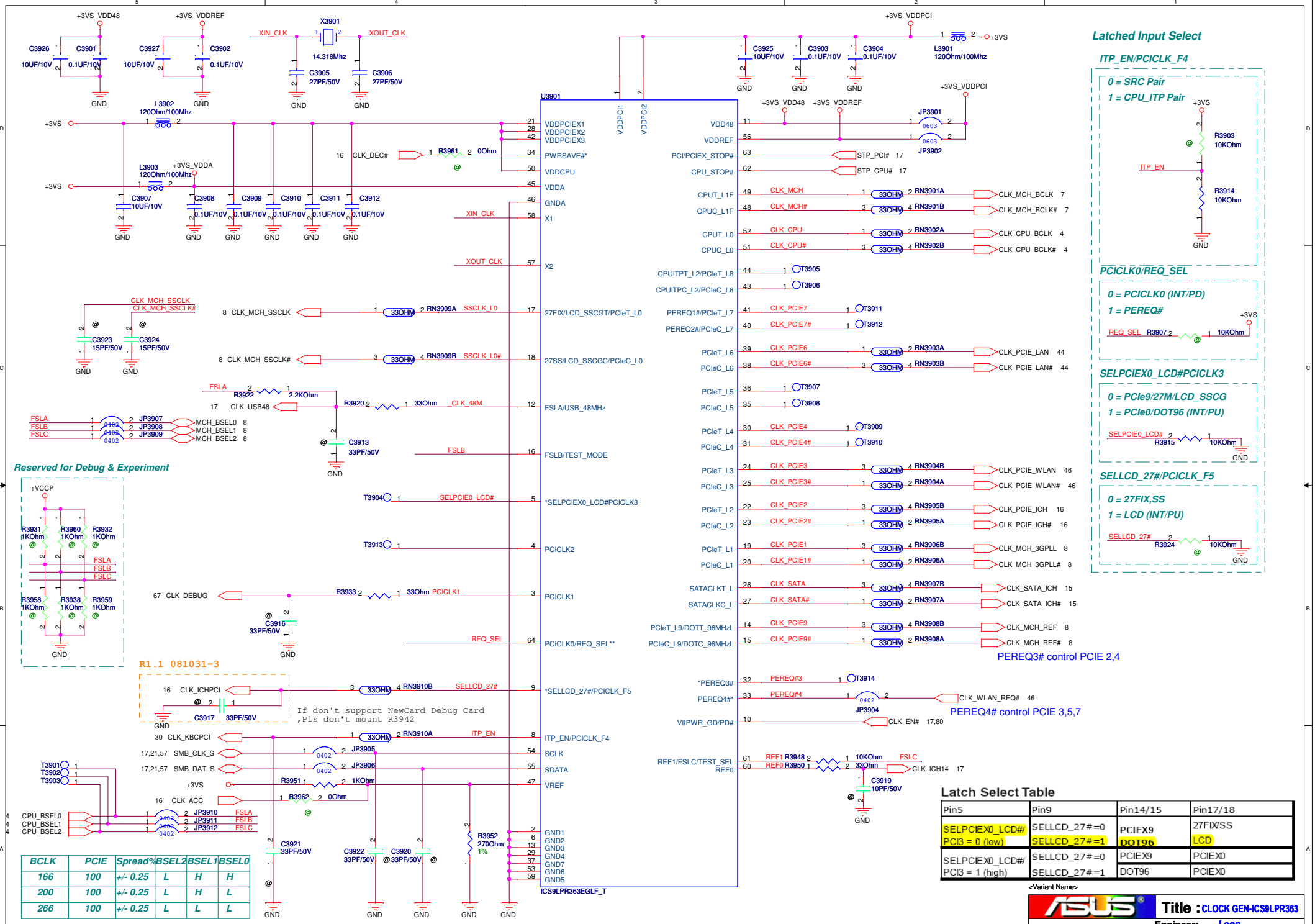

BCLK	PCIE	Spread%	BSEL2	BSEL1	BSEL0
166	100	+/- 0.25	L	H	H
200	100	+/- 0.25	L	H	L
266	100	+/- 0.25	L	L	L

Latch Select Table

Pin5	Pin9	Pin14/15	Pin17/18
SELPCIEX0_LCD#/ PCI3 = 0 (low)	SELLCD_27#=0	PCIEX9	27FIX/SS
	SELLCD_27#=1	DOT96	LCD
SELPCIEX0_LCD#/ PCI3 = 1 (high)	SELLCD_27#=0	PCIEX9	PCIEX0
	SELLCD_27#=1	DOT96	PCIEX0

<Variant Name>

ASUS

Title : CLOCK GEN-ICS9LPR363

ASUSTeK COMPUTER INC. NB1

Engineer: Leon

Size	Project Name	Rev
Custom	K70IJ	1.0

Date: Thursday, April 30, 2009 Sheet 39 of 96

<Variant Name>

ASUSTeK COMPUTER INC	Title : Schematic page name	
	Engineer: Leon	
Size: Custom	Project Name: K70IJ	Rev: 1.0
Date: Wednesday, April 29, 2009	Sheet 40 of 96	

SWITCH BUTTON

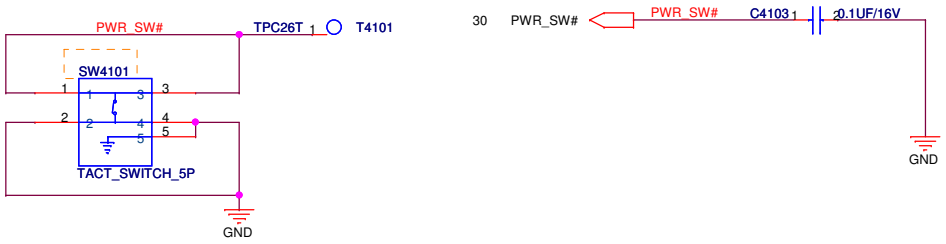

LED

For WireLess LED

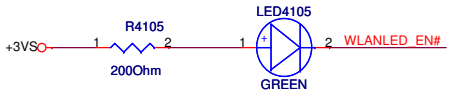

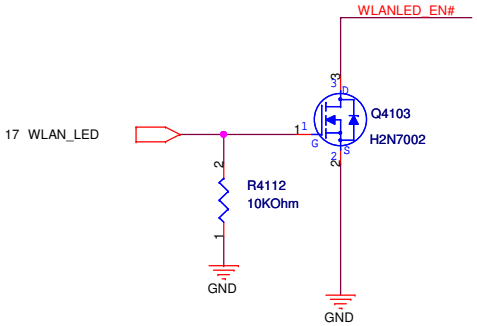

for Cap. Lock

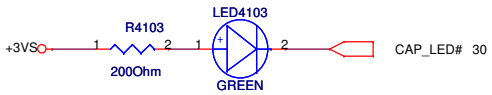

for Num Lock

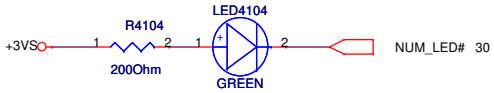

For POWER LED

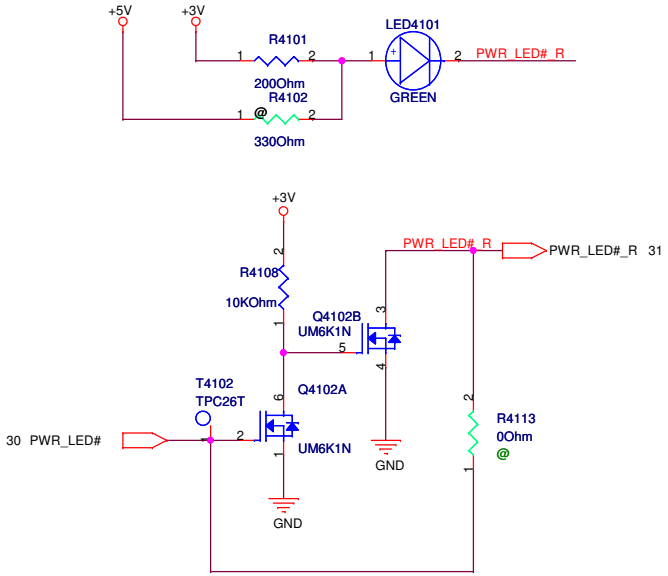

<Variant Name>

ASUSTeK COMPUTER INC	Title : Switch Button & LED	
	Engineer: Leon	
Size B	Project Name K70IJ	Rev 1.0
Date: Thursday, April 30, 2009	Sheet 41 of 96	

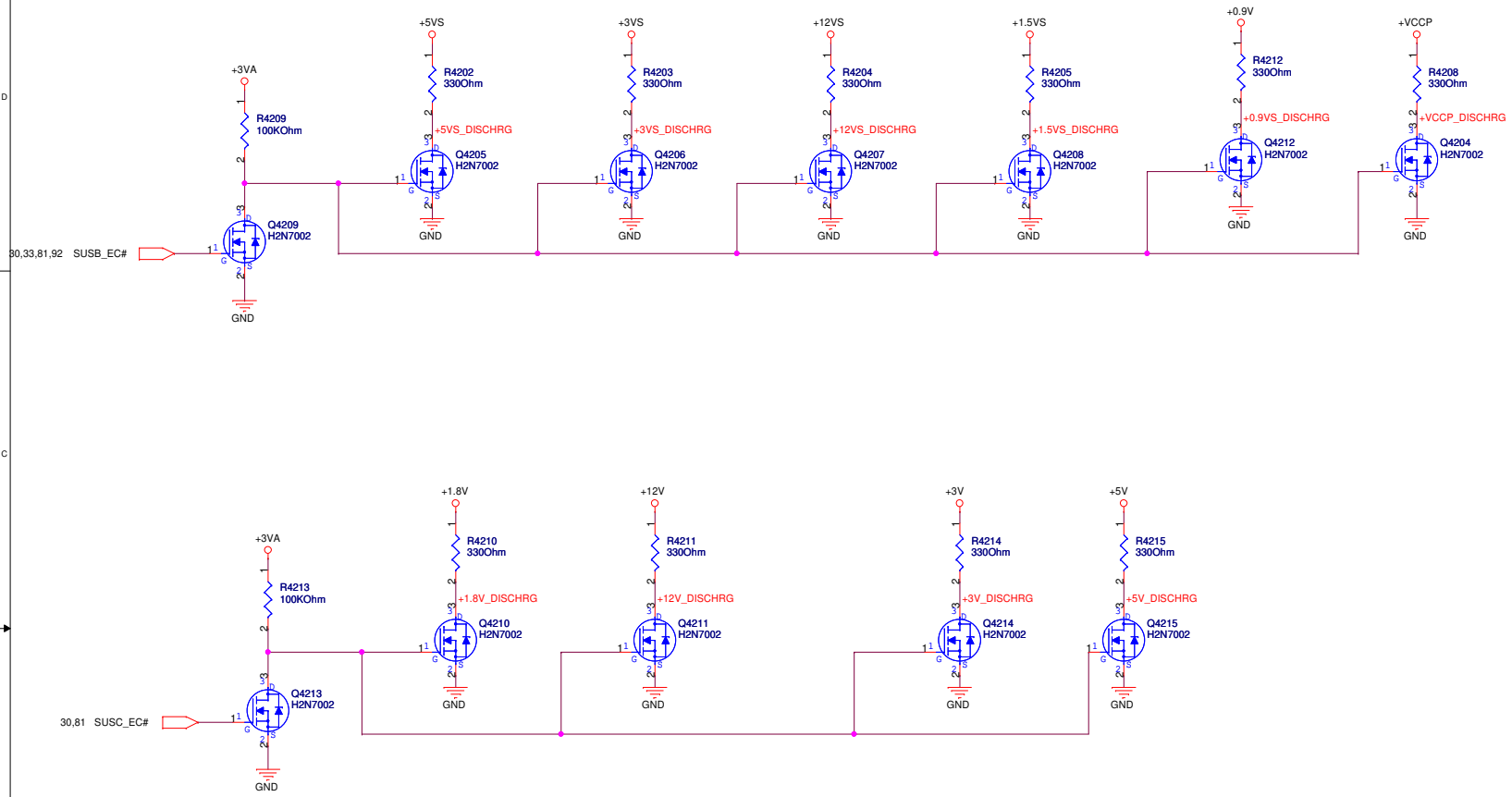

<Variant Name>

ASUSTeK COMPUTER INC. NB1	Title : DISCHARGE		
	Engineer: Leon		
Size: Custom	Project Name: K70IJ		Rev: 1.0
Date: Thursday, April 30, 2009	Sheet 42 of 96		

<Variant Name>

ASUSTeK COMPUTER INC	Title : Schematic page name		
	Engineer: Leon		
Size: Custom	Project Name: K70IJ		Rev: 1.0
Date: Wednesday, April 29, 2009	Sheet 43 of 96		

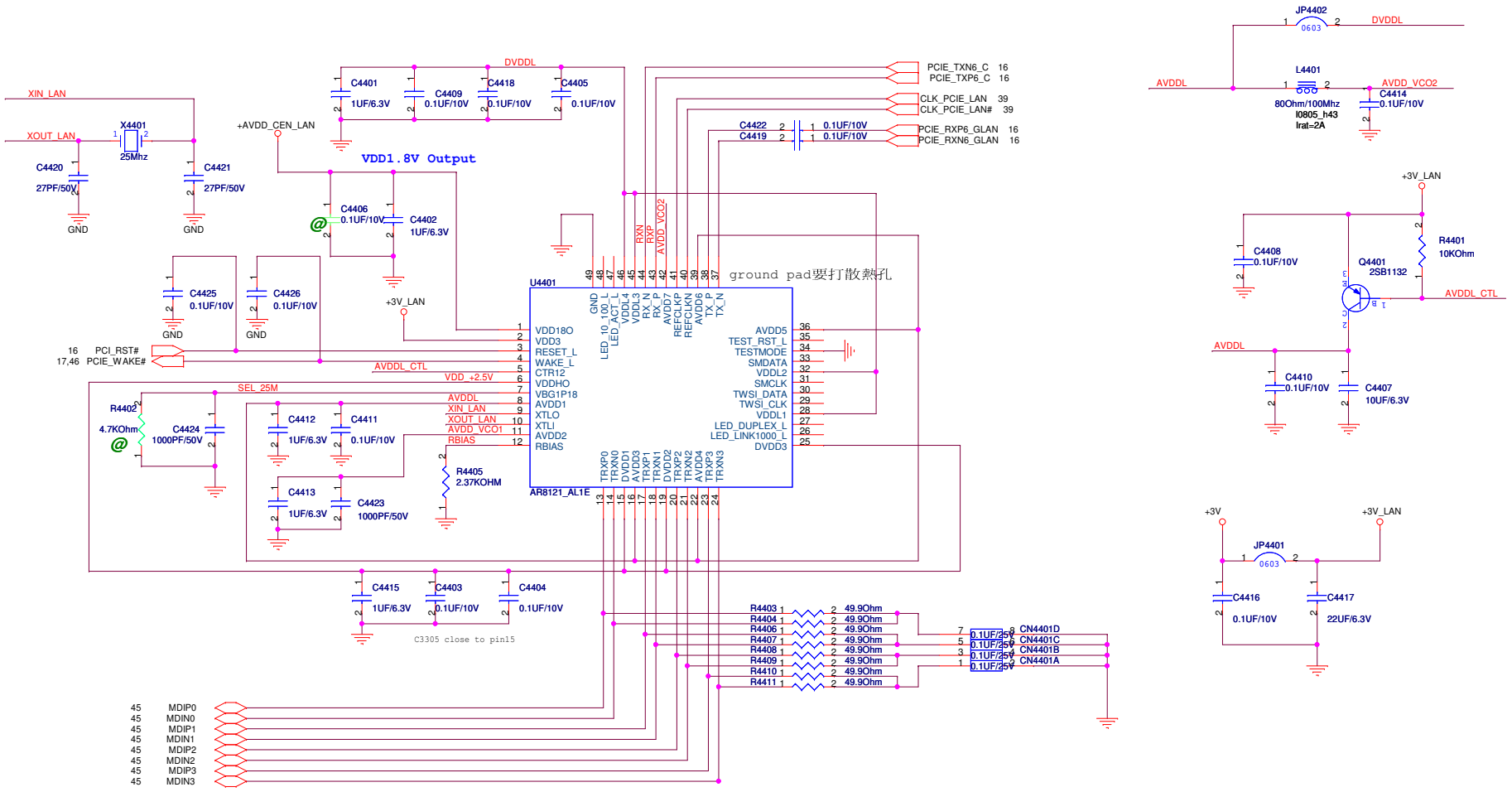

ASUSTeK COMPUTER INC.	Title : GigaLAN	Engineer: Leon
Size: Custom	Project Name: K70IJ	Rev: 1.0
Date: Thursday, April 30, 2009	Sheet 44 of 96	

LAN CONN.

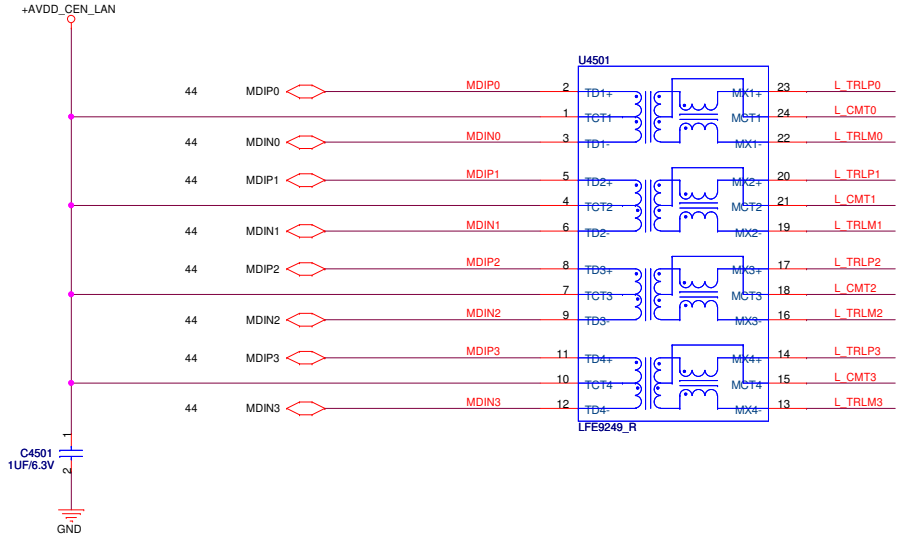

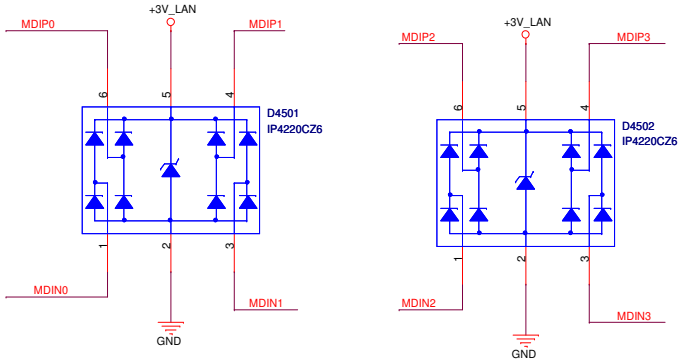

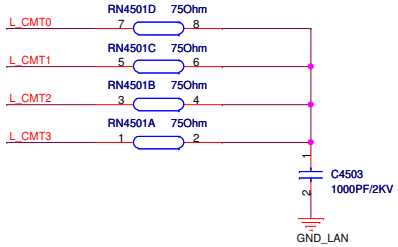

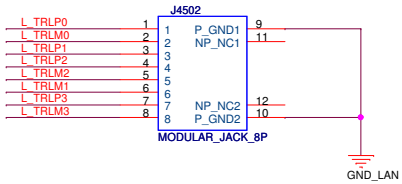

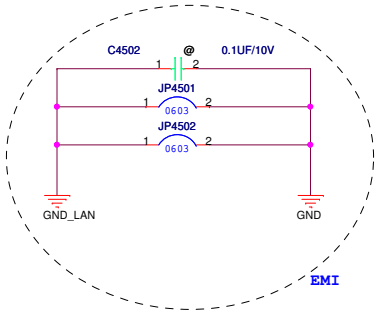

<Variant Name>

ASUSTeK COMPUTER INC. NB1	Title : MDC & RJ45+11		
	Engineer: Leon		
Size: Custom	Project Name: K70IJ		Rev: 1.0
Date: Thursday, April 30, 2009	Sheet 45 of 96		

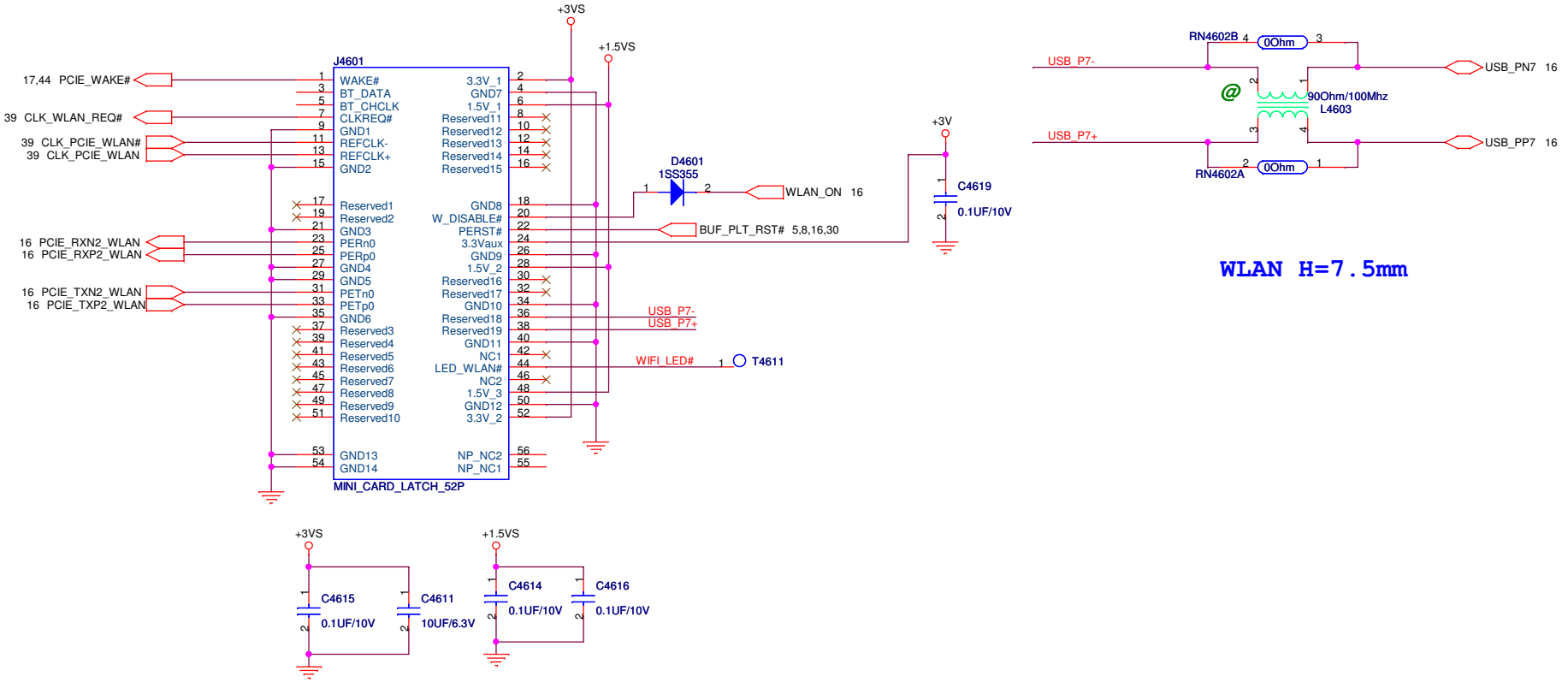

WLAN H=7.5mm

<Variant Name>

ASUSTeK COMPUTER INC. NB1	Title : Mini card_WLAN+3G	
	Engineer: Leon	
Size: Custom	Project Name: K70IJ	Rev: 1.0
Date: Thursday, April 30, 2009	Sheet 46 of 96	

<Variant Name>

ASUS	Title : N/A	
ASUSTeK COMPUTER INC. NB1	Engineer: Leon	
Size: Custom	Project Name: K70IJ	Rev: 1.0
Date: Wednesday, April 29, 2009	Sheet 47 of 96	

<Variant Name>

ASUS	Title : Schematic page name	
ASUSTeK COMPUTER INC. NB1	Engineer: Leon	
Size: Custom	Project Name: K70IJ	Rev: 1.0
Date: Wednesday, April 29, 2009	Sheet 48 of 96	

<Variant Name>

ASUSTeK COMPUTER INC. NB1	Title : Schematic page name	
	Engineer: Leon	
Size: Custom	Project Name: K70IJ	Rev: 1.0
Date: Wednesday, April 29, 2009	Sheet 49 of 96	

<Variant Name>

ASUSTeK COMPUTER INC	Title : Schematic page name		
	Engineer: Leon		
Size: Custom	Project Name: K70IJ		Rev: 1.0
Date: Wednesday, April 29, 2009	Sheet 50 of 96		

<Variant Name>

ASUSTeK COMPUTER INC. NB1	Title : N/A	
	Engineer: Leon	
Size: Custom	Project Name: K70IJ	Rev: 1.0
Date: Wednesday, April 29, 2009	Sheet 51 of 96	

<Variant Name>

ASUS	Title : N/A	
ASUSTeK COMPUTER INC. NB1	Engineer: Leon	
Size: Custom	Project Name: K70IJ	Rev: 1.0
Date: Wednesday, April 29, 2009	Sheet 52 of 96	

<Variant Name>

ASUSTeK COMPUTER INC	Title : N/A	
	Engineer: Leon	
Size: Custom	Project Name: K70IJ	Rev: 1.0
Date: Wednesday, April 29, 2009	Sheet 53 of 96	

<Variant Name>

ASUS	Title : NEWCARD	
ASUSTeK COMPUTER INC. NB1	Engineer: Leon	
Size: B	Project Name: K70IJ	Rev: 1.0
Date: Wednesday, April 29, 2009	Sheet 54 of 96	

<Variant Name>

ASUSTeK COMPUTER INC	Title : Schematic page name		
	Engineer: Leon		
Size: Custom	Project Name: K70IJ		Rev: 1.0
Date: Wednesday, April 29, 2009	Sheet 55 of 96		

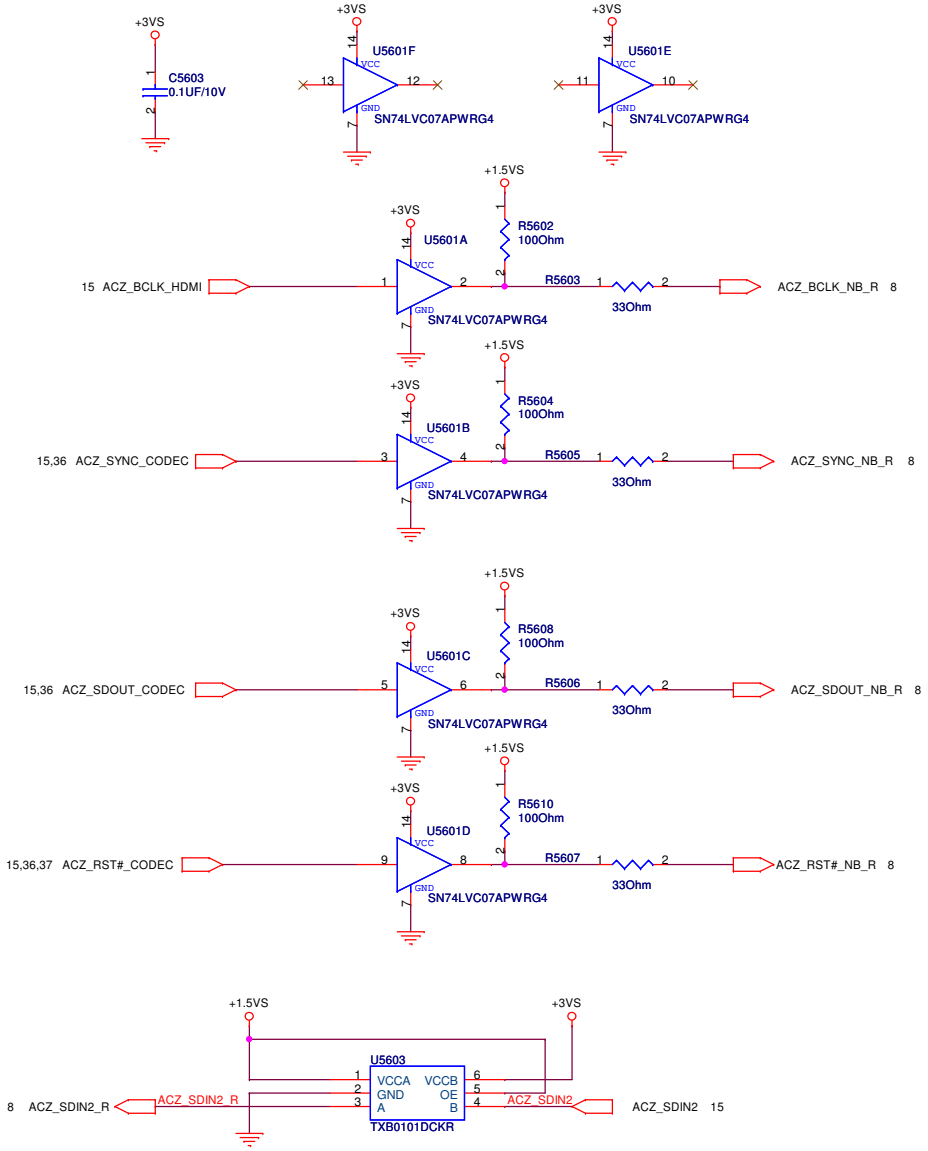

<Variant Name>

ASUS	Title : HDA level shifter	
ASUSTeK COMPUTER INC. NB1	Engineer: Leon	
Size: Custom	Project Name: K70IJ	Rev: 1.0
Date: Thursday, April 30, 2009	Sheet 56 of 96	

HDMI WtoB Connector

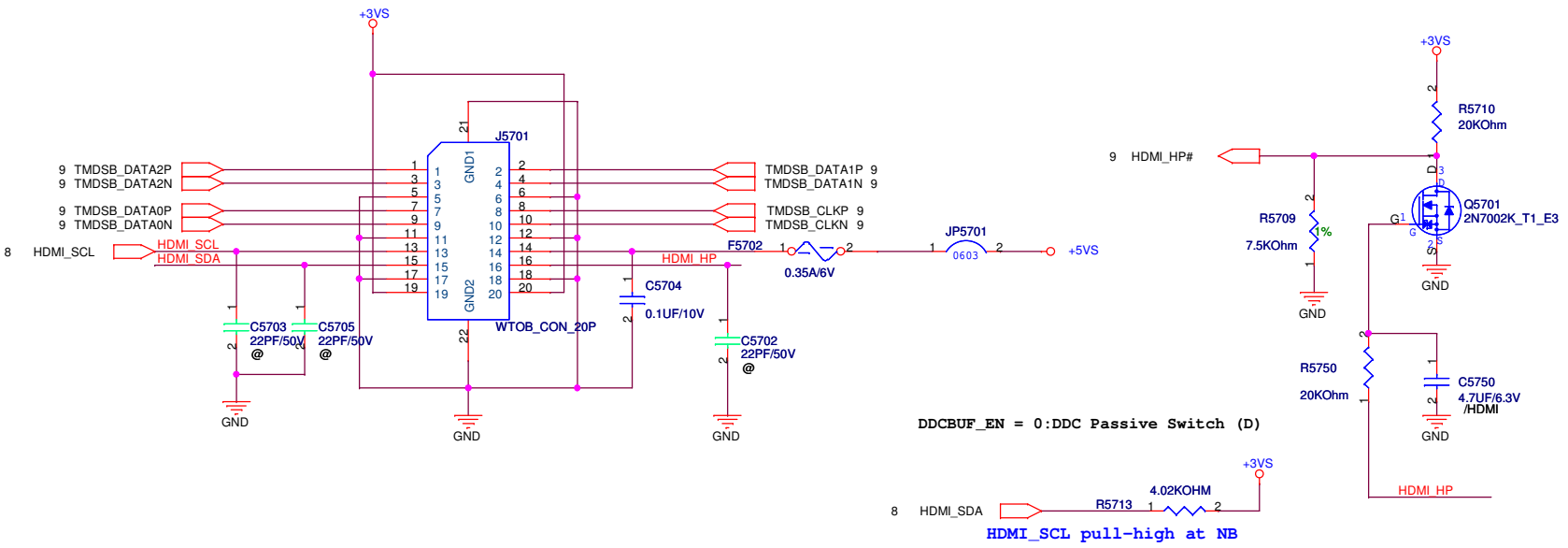

HDCP ROM

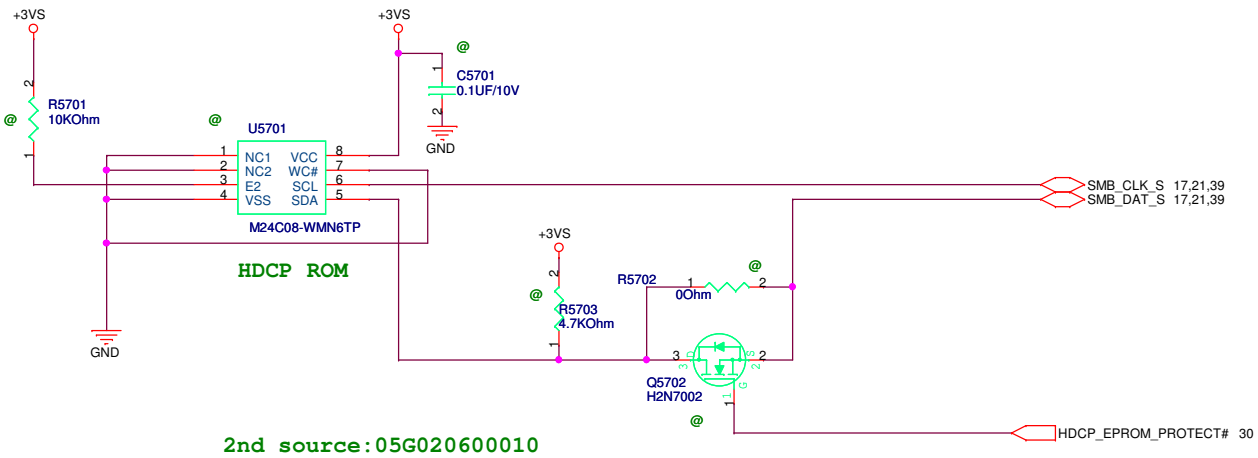

<Variant Name>

ASUSTeK COMPUTER INC. NB1	Title : iHDMI	
	Engineer: Leon	
Size B	Project Name	Rev 1.0
Date: Thursday, April 30, 2009	Sheet 57 of 95	

<Variant Name>

ASUSTeK COMPUTER INC. NB1	Title : Schematic page name		
	Engineer: Leon		
Size: Custom	Project Name: K70IJ		Rev: 1.0
Date: Wednesday, April 29, 2009	Sheet 58 of 96		

<Variant Name>

ASUSTeK COMPUTER INC. NB1	Title : Schematic page name		
	Engineer: Leon		
Size: Custom	Project Name: K70IJ		Rev: 1.0
Date: Wednesday, April 29, 2009	Sheet 59 of 96		

<Variant Name>

ASUSTeK COMPUTER INC	Title : Schematic page name	
	Engineer: Leon	
Size: Custom	Project Name: K70IJ	Rev: 1.0
Date: Wednesday, April 29, 2009	Sheet 60 of 96	

<Variant Name>

ASUSTeK COMPUTER INC	Title : Schematic page name	
	Engineer: Leon	
Size: Custom	Project Name: K70IJ	Rev: 1.0
Date: Wednesday, April 29, 2009	Sheet 61 of 96	

USB IO Board

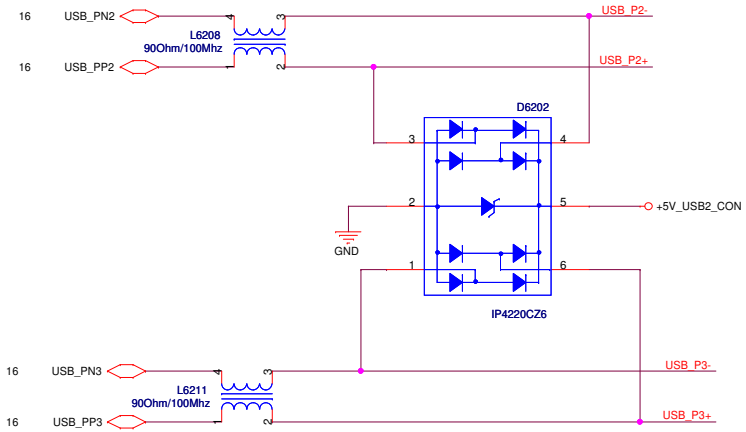

USB Cardreader

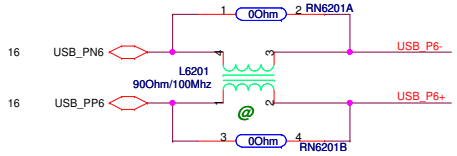

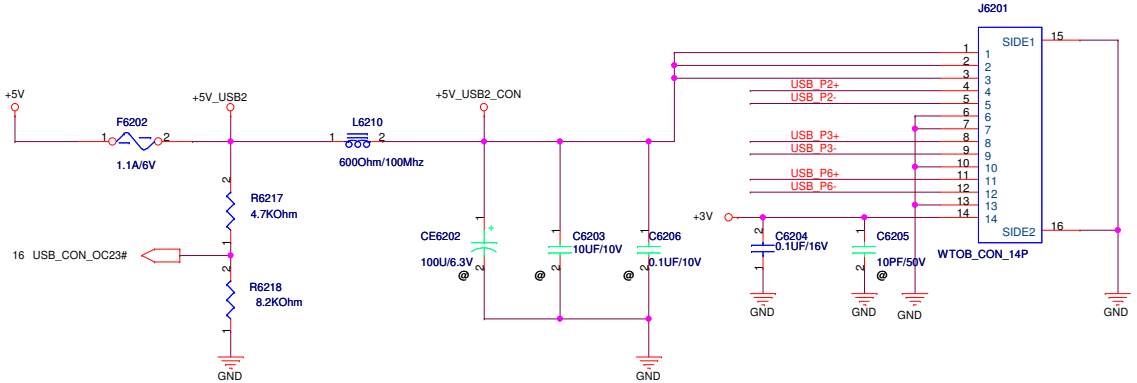

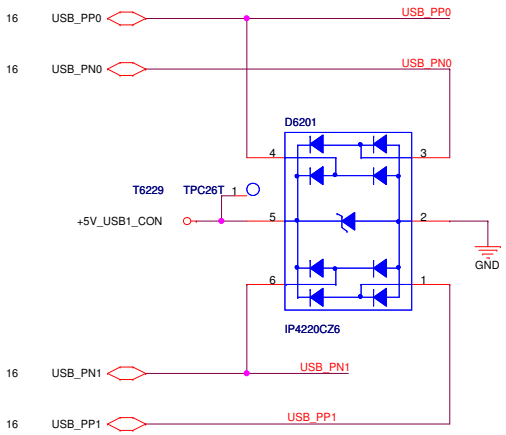

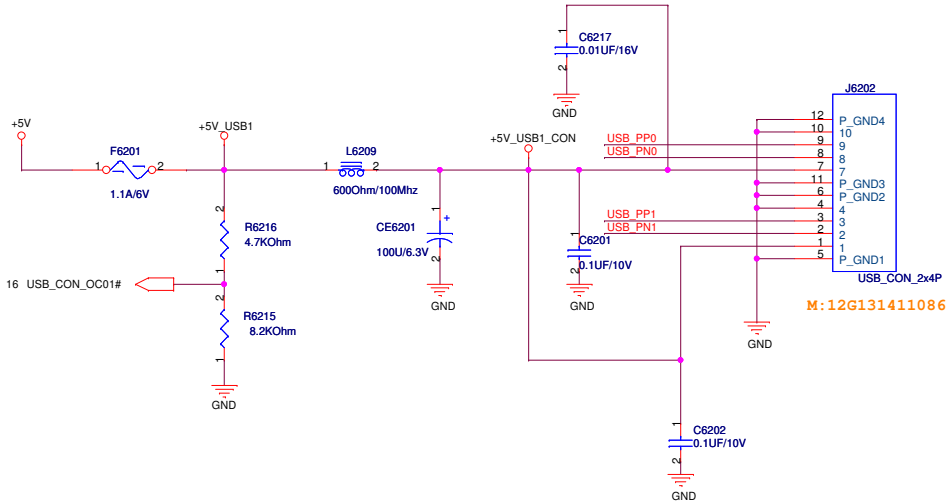

<Variant Name>

ASUS	Title : USB CONN		
ASUSTeK COMPUTER INC	Engineer: Leon		
Size: Custom	Project Name: K70IJ		Rev: 1.0
Date: Thursday, April 30, 2009	Sheet 62 of 96		

<Variant Name>

ASUSTeK COMPUTER INC	Title : Schematic page name		
	Engineer: Leon		
Size: Custom	Project Name: K70IJ		Rev: 1.0
Date: Wednesday, April 29, 2009	Sheet 63 of 96		

<Variant Name>

ASUSTeK COMPUTER INC. NB1	Title : Schematic page name		
	Engineer: Leon		
Size: Custom	Project Name: K70IJ		Rev: 1.0
Date: Wednesday, April 29, 2009	Sheet 64 of 96		

<Variant Name>

ASUS	Title : SPI ROM	
ASUSTeK COMPUTER INC. NB1	Engineer: Leon	
Size: Custom	Project Name: K70IJ	Rev: 1.0
Date: Wednesday, April 29, 2009	Sheet 65 of 96	

<Variant Name>

ASUSTeK COMPUTER INC	Title : LED	
	Engineer: Leon	
Size: Custom	Project Name: K70IJ	Rev: 1.0
Date: Wednesday, April 29, 2009	Sheet 66 of 96	

LPC DEBUG PORT

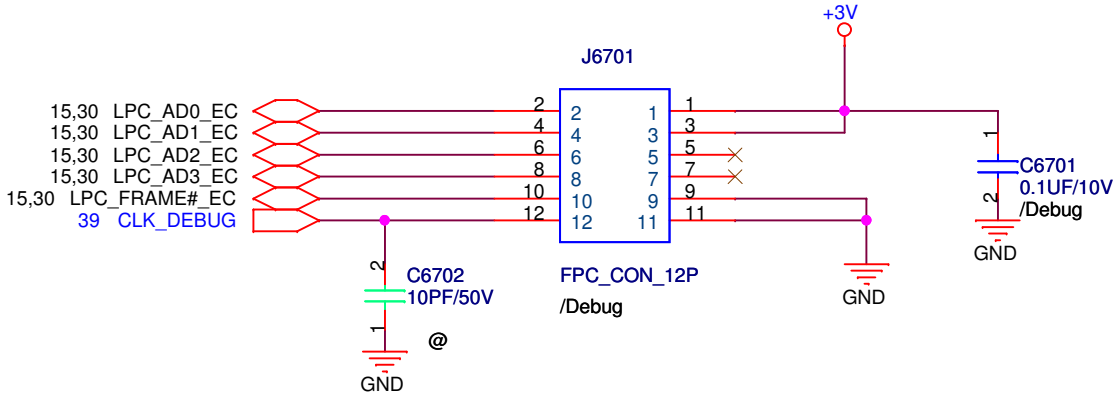

<Variant Name>

ASUSTeK COMPUTER INC	Title : DEBUG CONN	
	Engineer: Leon	
Size: A	Project Name: K70IJ	Rev: 1.0
Date: Thursday, April 30, 2009	Sheet 67 of 96	

DC IN

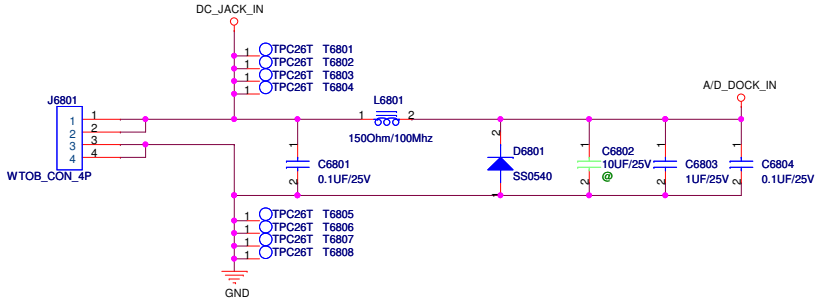

BAT IN

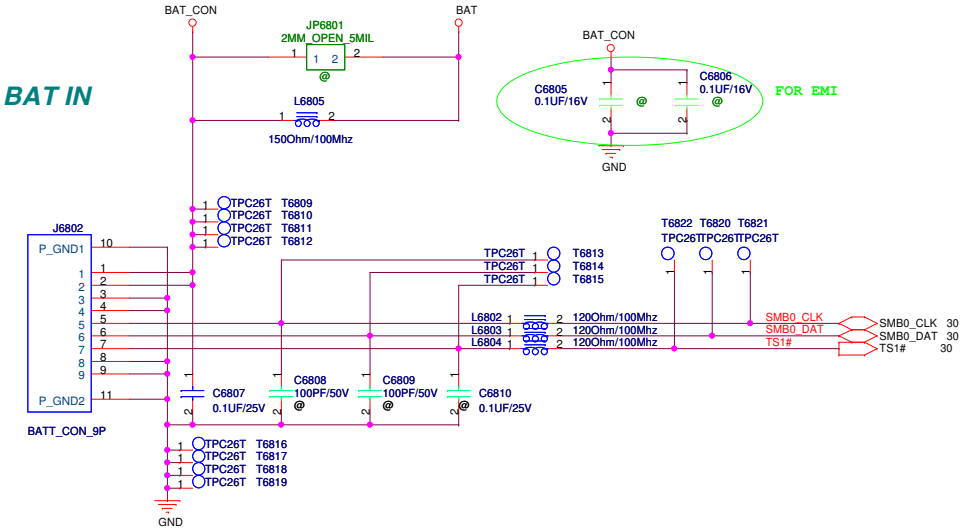

Note: When plug in or out the battery, it may cause a spike to damage EC and gas gauge. It needs to add varistors to protect those pins.

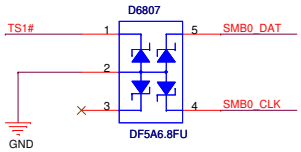

Without Battery & Pull out Adapter

When AC_BAT_SYS<7.8V Active

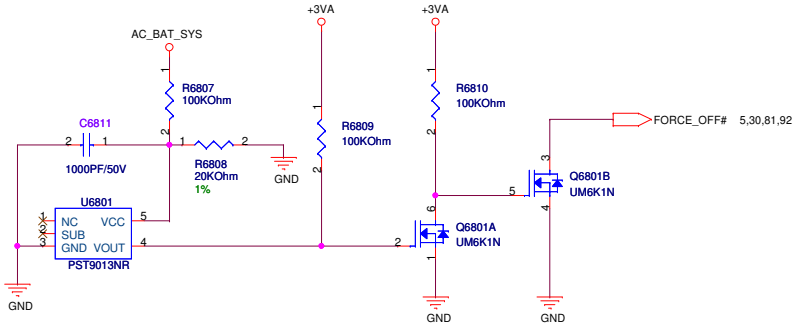

<Variant Name>

ASUS	Title : DC & BAT IN	
ASUSTeK COMPUTER INC. NB1	Engineer: Leon	
Size: Custom	Project Name: K70IJ	Rev: 1.0
Date: Thursday, April 30, 2009	Sheet 68 of 96	

<Variant Name>

ASUSTeK COMPUTER INC	Title : Schematic page name		
	Engineer: Leon		
Size: Custom	Project Name: K70IJ		Rev: 1.0
Date: Wednesday, April 29, 2009	Sheet 69 of 96		

<Variant Name>

ASUS	Title : Debug CONN.	
ASUSTeK COMPUTER INC	Engineer: Leon	
Size: Custom	Project Name: K70IJ	Rev: 1.0
Date: Wednesday, April 29, 2009	Sheet 70 of 96	

<Variant Name>

ASUSTeK COMPUTER INC	Title : Schematic page name		
	Engineer: Leon		
Size: Custom	Project Name: K70IJ		Rev: 1.0
Date: Wednesday, April 29, 2009	Sheet 71 of 96		

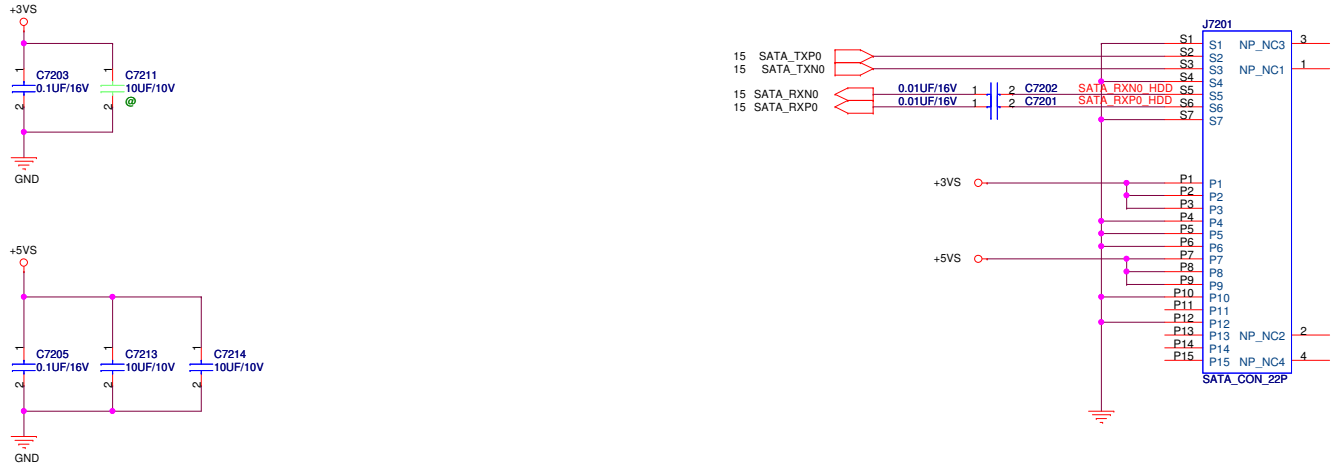

ODD

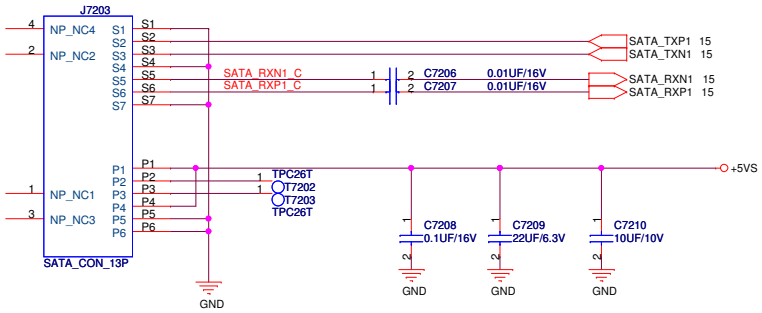

<Variant Name>

ASUSTeK COMPUTER INC. NB1	Title : SATA- ODD	
	Engineer: Leon	
Size: Custom	Project Name: K70IJ	Rev: 1.0
Date: Thursday, April 30, 2009	Sheet 72 of 96	

<Variant Name>

ASUS	Title : N/A	
ASUSTeK COMPUTER INC. NB1	Engineer: Leon	
Size: Custom	Project Name: K70IJ	Rev: 1.0
Date: Wednesday, April 29, 2009	Sheet 73 of 96	

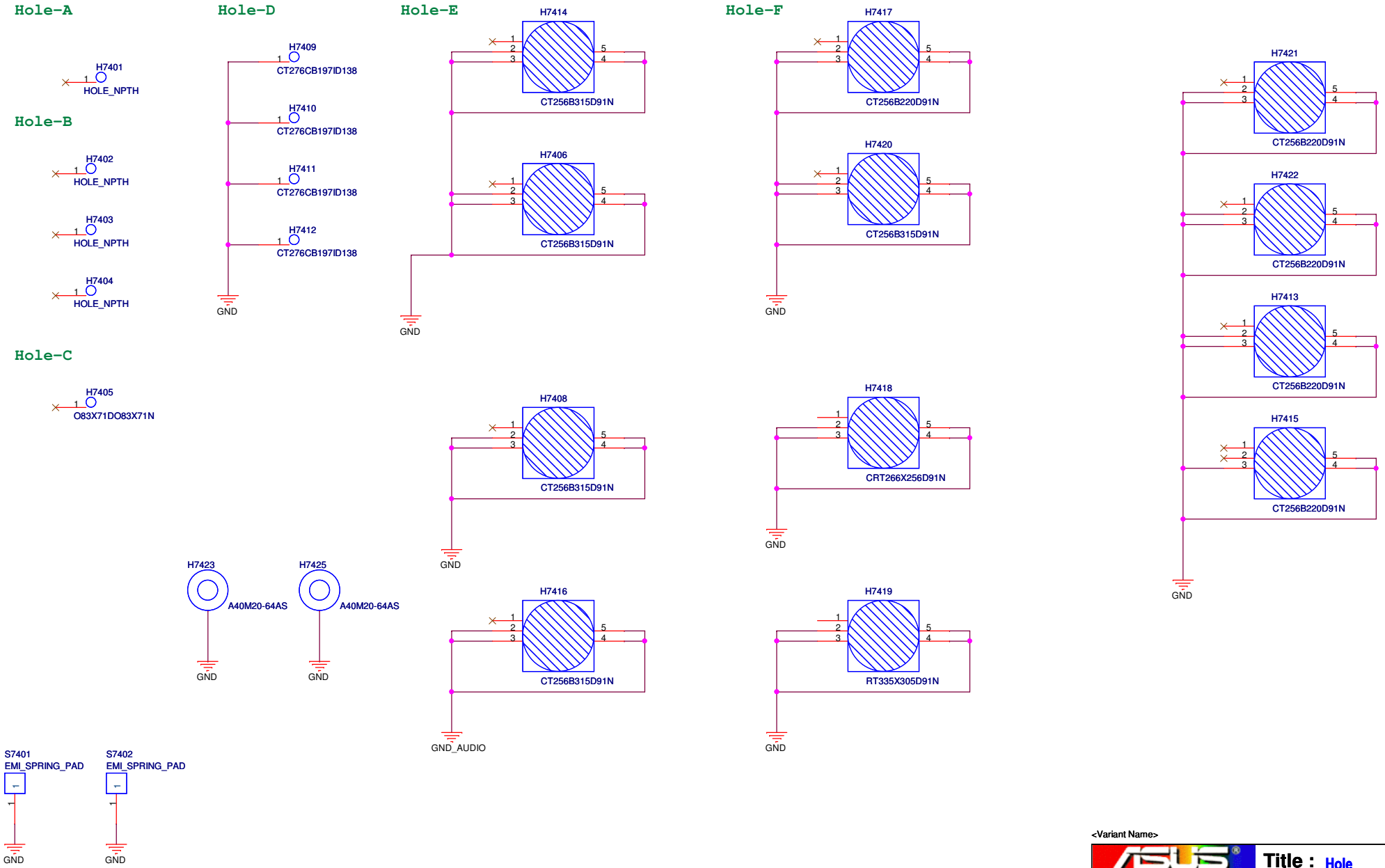

<Variant Name>

ASUSTeK COMPUTER INC	Title : Hole	
	Engineer: Leon	
Size B	Project Name K70IJ	Rev 1.0
Date: Wednesday, April 29, 2009	Sheet 74 of 96	

<Variant Name>

ASUSTeK COMPUTER INC	Title : N/A	
	Engineer: Leon	
Size: A	Project Name: K70IJ	Rev: 1.0
Date: Wednesday, April 29, 2009	Sheet 75 of 96	

<Variant Name>

ASUS	Title : EXPRESS GATE	
ASUSTeK COMPUTER INC	Engineer: Leon	
Size: Custom	Project Name: K70IJ	Rev: 1.0
Date: Wednesday, April 29, 2009	Sheet 76 of 96	

R2.0 090429-1	change R1503 from 20Kohm to 22Kohm for power sequence.	page15
R2.0 090429-2	Add some cap for power rippler	page23
R2.0 090429-3	Add some cap for power rippler	page24
R2.0 090429-4	Change R3046 to 220K to reduce power loading on crystal	page30
R2.0 090430-1	Change higher cap.	page12
R2.0 090430-2	Change higher cap. to reduce power rippler	page12
R2.0 090430-3	Change higher cap. to reduce power rippler	page18

<Variant Name>

ASUSTeK COMPUTER INC	Title : Schematic page name		
	Engineer: Leon		
Size: Custom	Project Name: K70IJ		Rev: 1.0
Date: Wednesday, April 29, 2009	Sheet 78 of 96		

<Variant Name>

ASUSTeK COMPUTER INC	Title : Schematic page name	
	Engineer: Leon	
Size: Custom	Project Name: K70IJ	Rev: 1.0
Date: Wednesday, April 29, 2009	Sheet 79 of 96	

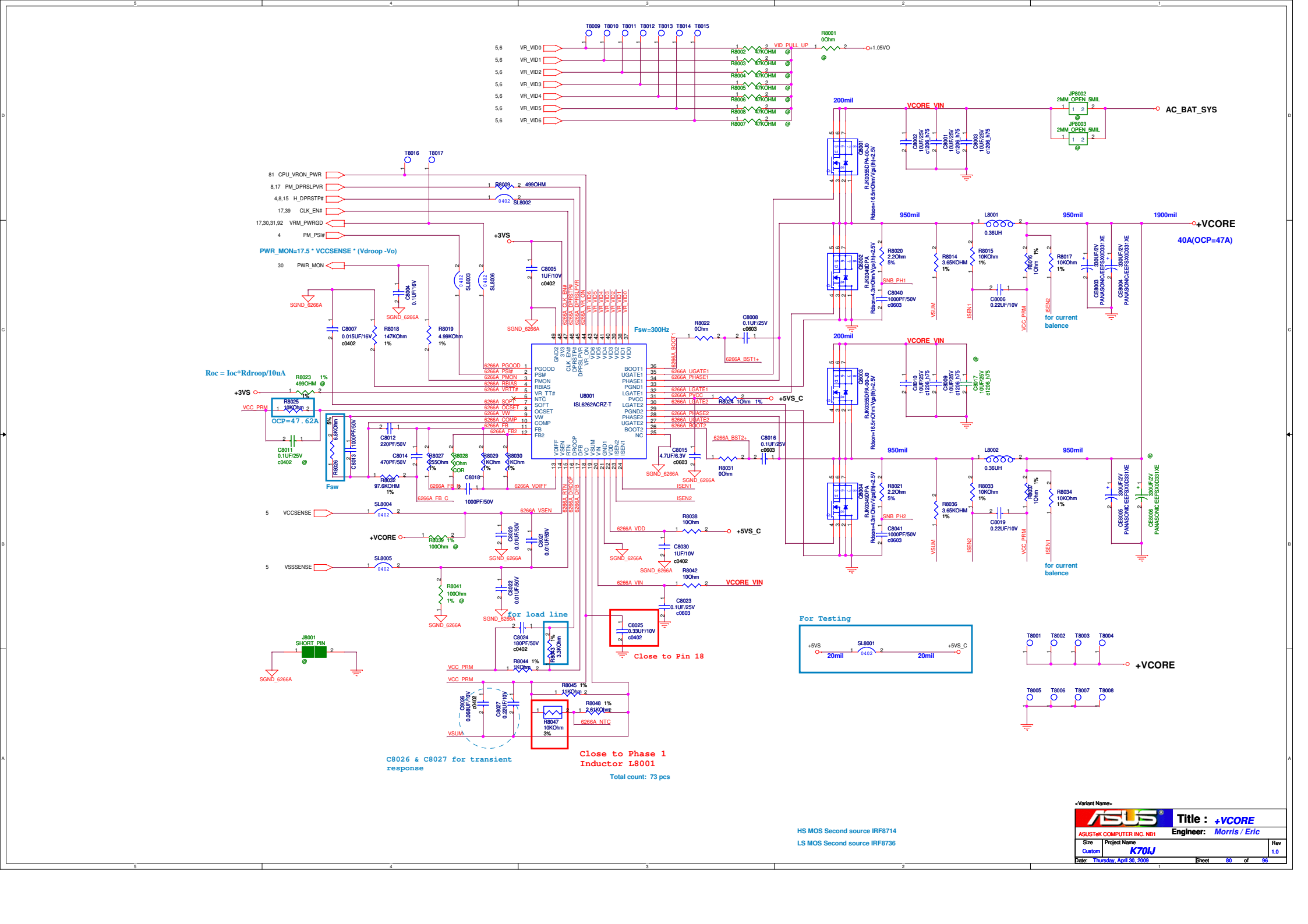
VR_VID0
VR_VID1
VR_VID2
VR_VID3
VR_VID4
VR_VID5
VR_VID6
VID_PULL_UP
+1.05VO
AC_BAT_SYS
VCORE_VIN
+VCORE
40A(OCP=47A)
+3VS
+5VS_C
PWR_MON=17.5 * VCCSENSE * (Vdroop -Vo)
Roc = Ioc*Rdroop/10uA
OCP=47.62A
Fsw
Fsw=300Hz
U8001
ISL6262ACRZ-T
for current balence
for load line
Close to Pin 18
Close to Phase 1 Inductor L8001
Total count: 73 pcs
C8026 & C8027 for transient response
For Testing
HS MOS Second source IRF8714
LS MOS Second source IRF8736
ASUSTeK COMPUTER INC. NB1
Title : +VCORE
Engineer: Morris / Eric
Size Custom
Project Name K70IJ
Rev 1.0
Date: Thursday, April 30, 2009
Sheet 80 of 96

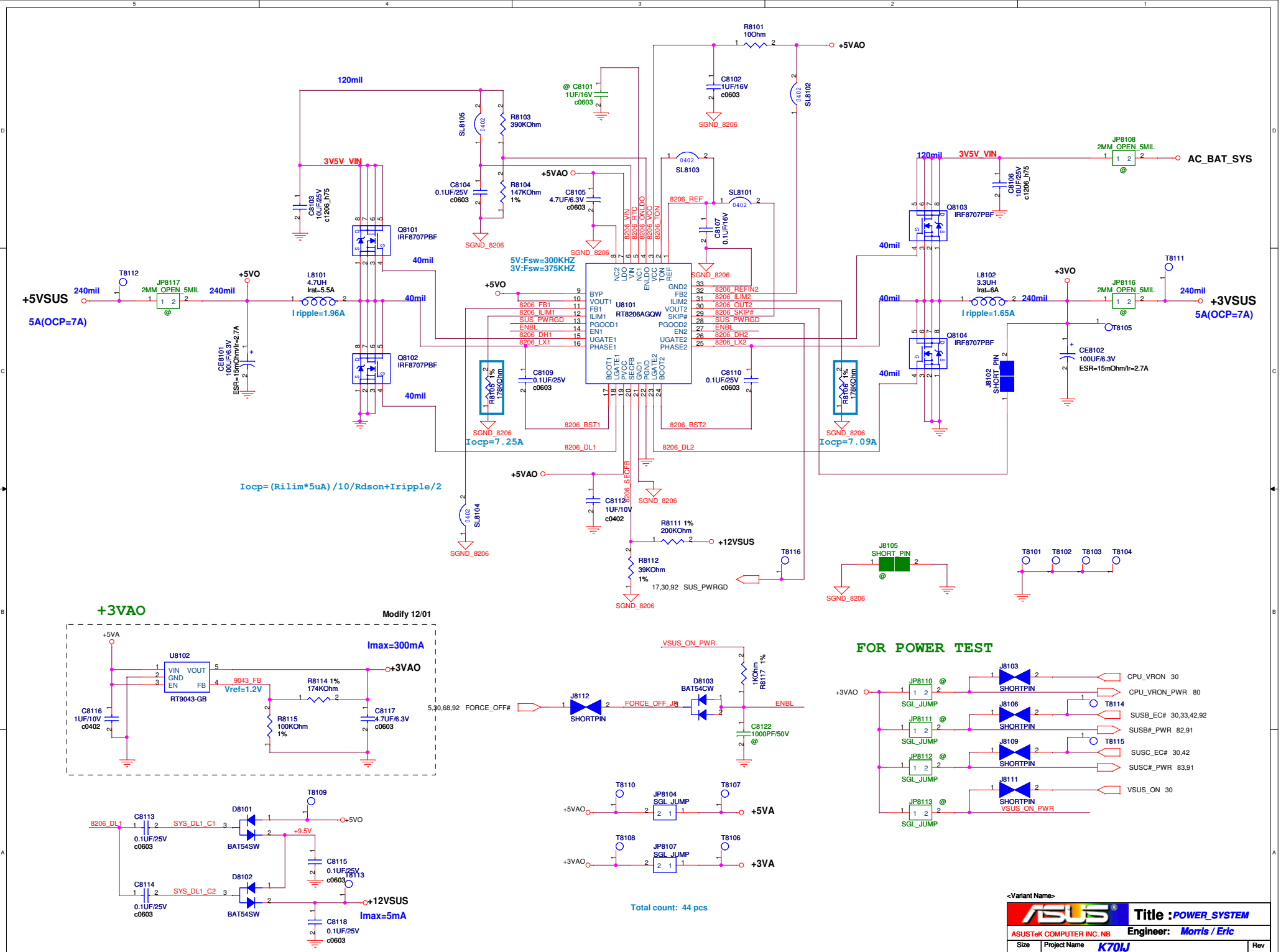
+5VSUS
5A(OCP=7A)
240mil
JP8117
2MM_OPEN_5MIL
T8112
+5VO
L8101
4.7UH
Irat=5.5A
I ripple=1.96A
CE8101
100UF/6.3V
ESR=15mOhm/Ir=2.7A
Q8101
IRF8707PBF
Q8102
IRF8707PBF
C8103
10UF/25V
c1206_h75
3V5V_VIN
120mil
40mil
R8103
390KOhm
SL8105
C8104
0.1UF/25V
c0603
R8104
147KOhm
1%
SGND_8206
+5VAO
C8105
4.7UF/6.3V
c0603
@ C8101
1UF/16V
c0603
R8101
10Ohm
C8102
1UF/16V
c0603
SL8102
SL8103
SL8101
8206_REF
C8107
0.1UF/16V
5V:Fsw=300KHZ
3V:Fsw=375KHZ
U8101
RT8206AGQW
BYP
VOUT1
FB1
ILIM1
PGOOD1
EN1
UGATE1
PHASE1
NC2
LDO
VIN
NC1
ENLDO
VCC
TON
REF
GND2
FB2
ILIM2
VOUT2
SKIP#
PGOOD2
EN2
UGATE2
PHASE2
BOOT1
LGATE1
PVCC
SECFB
GND1
PGND
LGATE2
BOOT2
8206_FB1
8206_ILIM1
SUS_PWRGD
ENBL
8206_DH1
8206_LX1
8206_REFIN2
8206_ILIM2
8206_OUT2
8206_SKIP#
SUS_PWRGD
ENBL
8206_DH2
8206_LX2
8206_BST1
8206_BST2
8206_DL1
8206_DL2
8206_SECFB
R8105 1%
178KOhm
R8106 1%
178KOhm
C8109
0.1UF/25V
c0603
C8110
0.1UF/25V
c0603
Iocp=7.25A
Iocp=7.09A
Iocp=(Rilim*5uA)/10/Rdson+Iripple/2
SL8104
C8112
1UF/10V
c0402
R8111 1%
200KOhm
+12VSUS
R8112
39KOhm
1%
17,30,92 SUS_PWRGD
T8116
Q8103
IRF8707PBF
Q8104
IRF8707PBF
C8106
10UF/25V
c1206_h75
JP8108
2MM_OPEN_5MIL
AC_BAT_SYS
L8102
3.3UH
Irat=6A
I ripple=1.65A
+3VO
JP8116
2MM_OPEN_5MIL
T8111
T8105
+3VSUS
5A(OCP=7A)
J8102
SHORT_PIN
CE8102
100UF/6.3V
ESR=15mOhm/Ir=2.7A
J8105
SHORT_PIN
T8101
T8102
T8103
T8104
+3VAO
Modify 12/01
+5VA
U8102
VIN
VOUT
GND
EN
FB
RT9043-GB
Imax=300mA
+3VAO
9043_FB
Vref=1.2V
R8114 1%
174KOhm
R8115
100KOhm
1%
C8116
1UF/10V
c0402
C8117
4.7UF/6.3V
c0603
VSUS_ON_PWR
D8103
BAT54CW
1KOhm
R8117 1%
5,30,68,92 FORCE_OFF#
J8112
SHORTPIN
FORCE_OFF_J8
ENBL
C8122
1000PF/50V
@
FOR POWER TEST
JP8110
JP8111
JP8112
JP8113
SGL_JUMP
J8103
J8106
J8109
J8111
SHORTPIN
CPU_VRON 30
CPU_VRON_PWR 80
T8114
SUSB_EC# 30,33,42,92
SUSB#_PWR 82,91
T8115
SUSC_EC# 30,42
SUSC#_PWR 83,91
VSUS_ON 30
VSUS_ON_PWR
T8109
D8101
BAT54SW
C8113
0.1UF/25V
c0603
SYS_DL1_C1
8206_DL1
+9.5V
C8115
0.1UF/25V
c0603
T8113
D8102
C8114
SYS_DL1_C2
C8118
0.1UF/25V
c0603
+12VSUS
Imax=5mA
T8110
T8107
JP8104
SGL_JUMP
+5VAO
+5VA
T8108
T8106
JP8107
+3VAO
+3VA
Total count: 44 pcs
<Variant Name>
Title : POWER_SYSTEM
ASUSTeK COMPUTER INC. NB
Engineer: Morris / Eric
Size
Custom
Project Name
K70IJ
Rev
1.0
Date: Thursday, April 30, 2009
Sheet 81 of 96

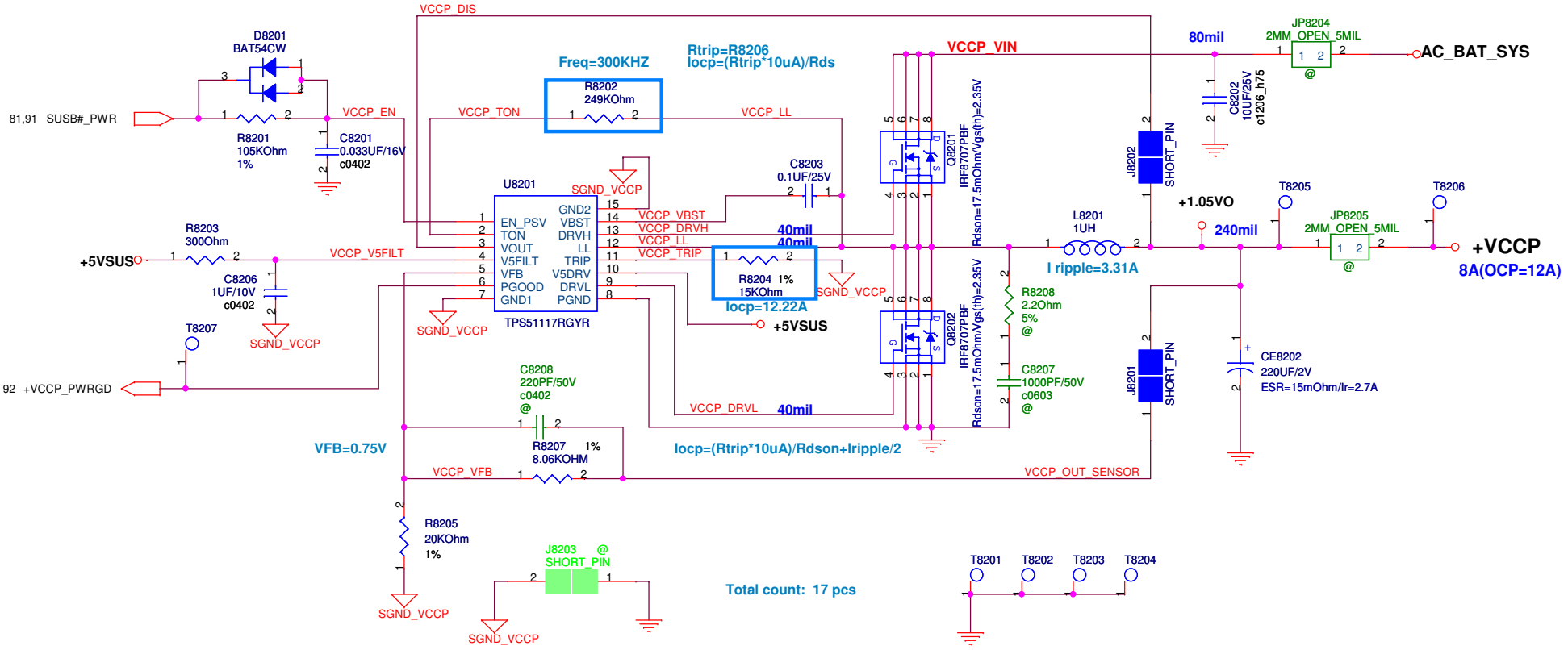

<Variant Name>

ASUSTeK COMPUTER INC. NB	Title : POWER_I/O_+VCCP	
	Engineer: Morris / Eric	
Size: Custom	Project Name: K70IJ	Rev: 1.0
Date: Thursday, April 30, 2009	Sheet 82 of 96	

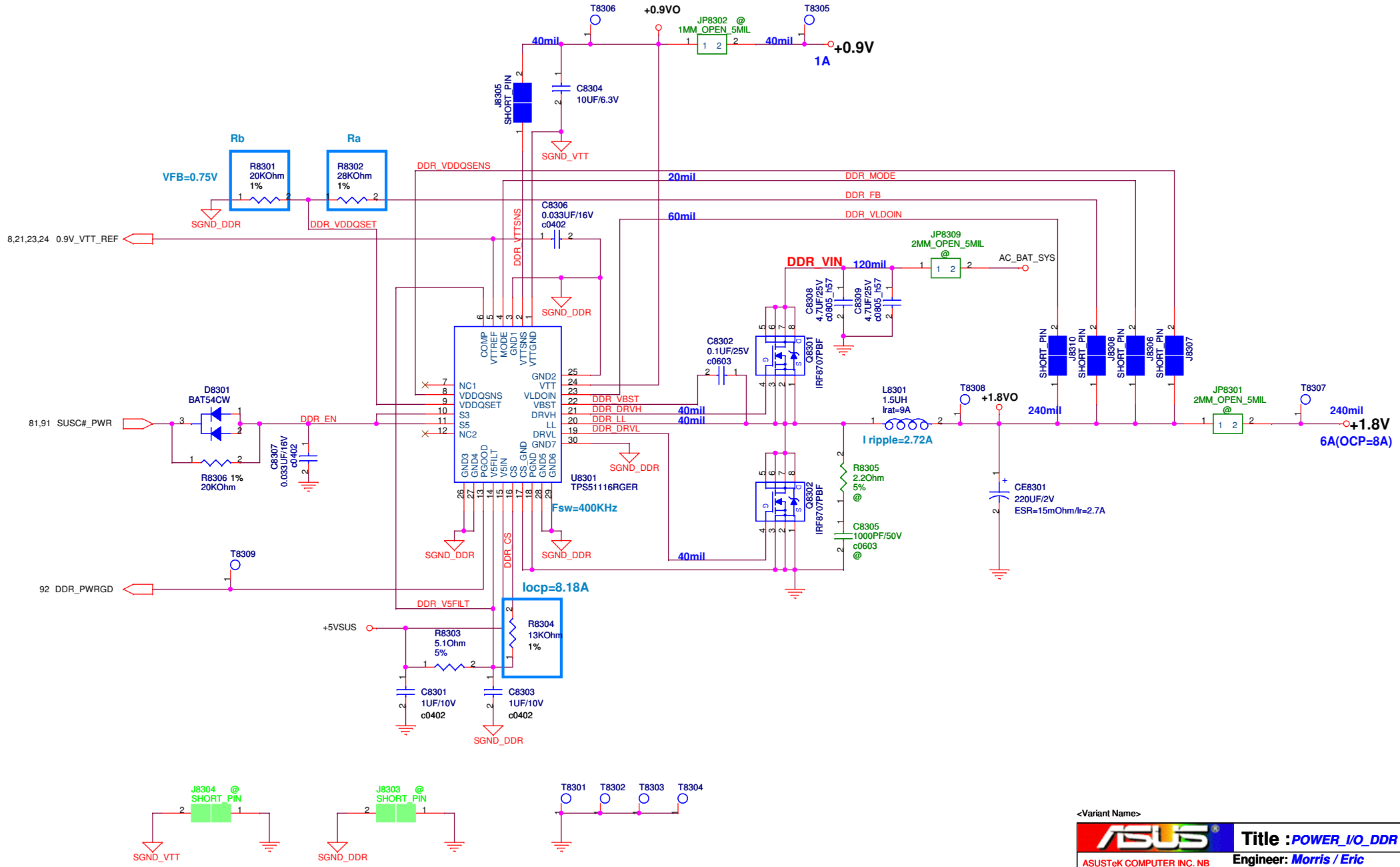

<Variant Name>

ASUSTeK COMPUTER INC. NB	Title : *POWER_I/O_DDR*	
	Engineer: *Morris / Eric*	
Size: B	Project Name: *K70IJ*	Rev: 1.0
Date: Thursday, April 30, 2009	Sheet 83 of 96	

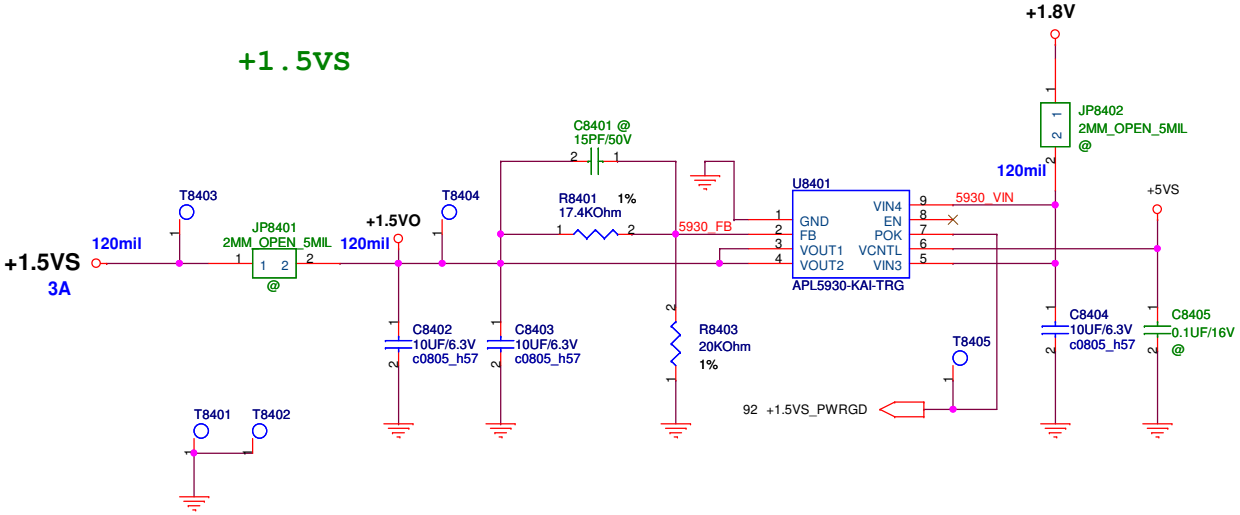

Total count: 7 pcs

<Variant Name>

ASUS	Title : POWER_I/O_+1.5VS	
ASUSTeK COMPUTER INC. NB	Engineer: Morris / Eric	
Size B	Project Name K70IJ	Rev 1.0
Date: Thursday, April 30, 2009	Sheet 84 of 96	

<Variant Name>

ASUSTeK COMPUTER INC. NB1	Title :	
	Engineer:	
Size: A	Project Name	Rev: 1.0
Date: Thursday, April 30, 2009	Sheet 85 of 96	

<Variant Name>

Title :

<OrgName>

Engineer:

Size	Project Name	Rev
B		1.0

Date: Thursday, April 30, 2009 Sheet 86 of 96

<Variant Name>

Title :

<OrgName>

Engineer:

Size	Project Name	Rev
Custom		1.0

Date: Thursday, April 30, 2009 Sheet 87 of 96

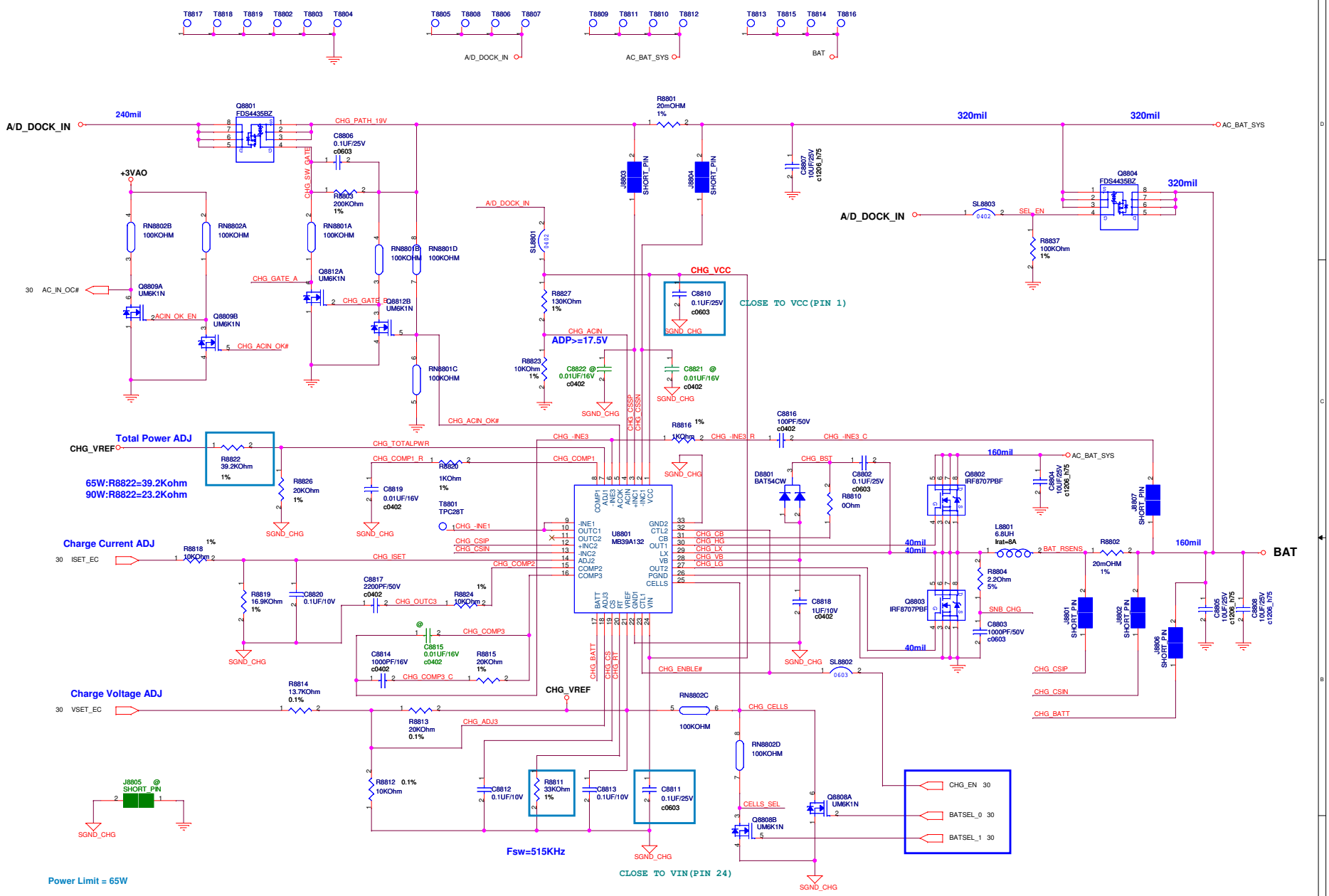

TOTAL COUNT:56 PCS

Battery Cells		
BATSEL_1	BATSEL_0	CELLS
H	H	2 CELLS
L	H	2 CELLS
H	L	3 CELLS
L	L	4 CELLS

Charger IC and EC Code correlation sheet :
Charger MAX8725 => EC CODE : 200
Charger MAX17015 => EC CODE : 201
Charger MB39A132 => EC CODE : 202

ASUSTeK COMPUTER INC. NB3

Title : CHARGER_202

Engineer: Morris / Eric

Size	Project Name	Rev
Custom	K70IJ	1.0

Date: Thursday, April 30, 2009 Sheet 88 of 96

<Variant Name>

Title :

<OrgName>

Engineer:

Size	Project Name	Rev
Custom		1.0

Date: Thursday, April 30, 2009 Sheet 89 of 96

BATTERY IN DETECT

<Variant Name>

ASUS	Title : POWER_DETECT	
ASUSTeK COMPUTER INC. NB	Engineer: Morris	
Size: Custom	Project Name: K50II	Rev: 1.0
Date: Thursday, April 30, 2009	Sheet 90 of 96	

SUSB#_PWR POWER

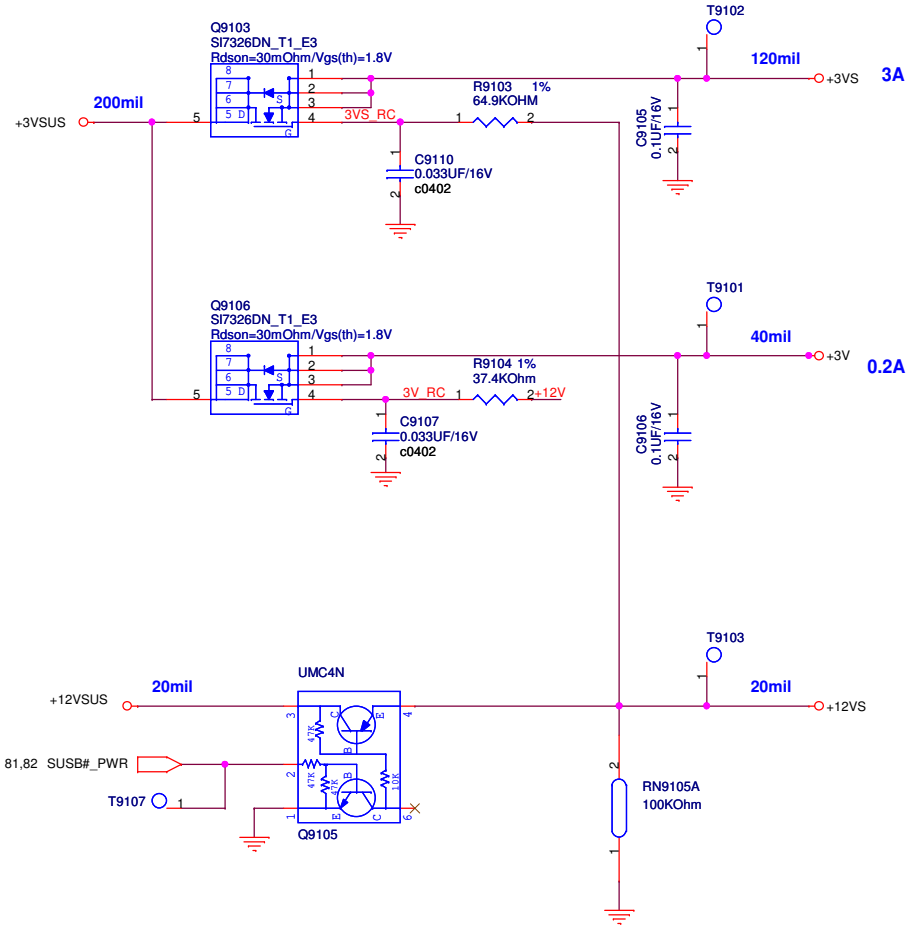

Total count: 19 pcs

SUSC#_PWR POWER

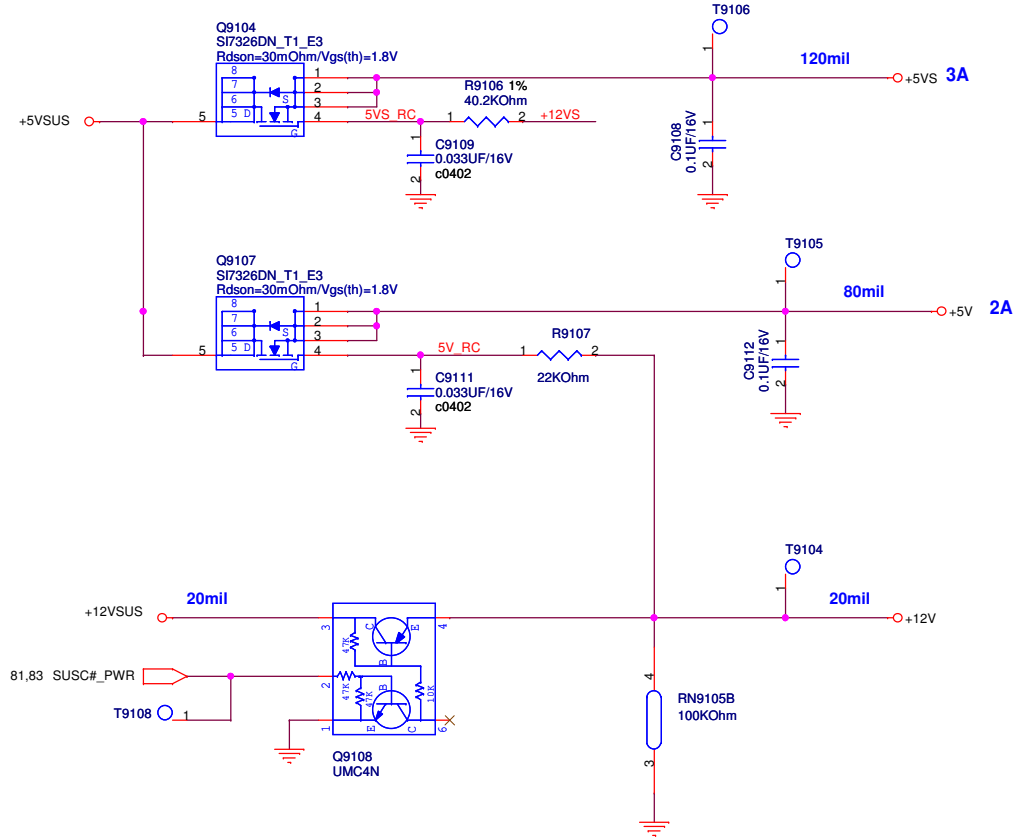

<Variant Name>

ASUSTeK COMPUTER INC. NB	Title : *POWER_LOAD SWITCH*	
	Engineer: *Morris / Eric*	
Size: B	Project Name: *K70IJ*	Rev: 1.0
Date: Thursday, April 30, 2009	Sheet 91 of 96	

POWER GOOD DETECTER

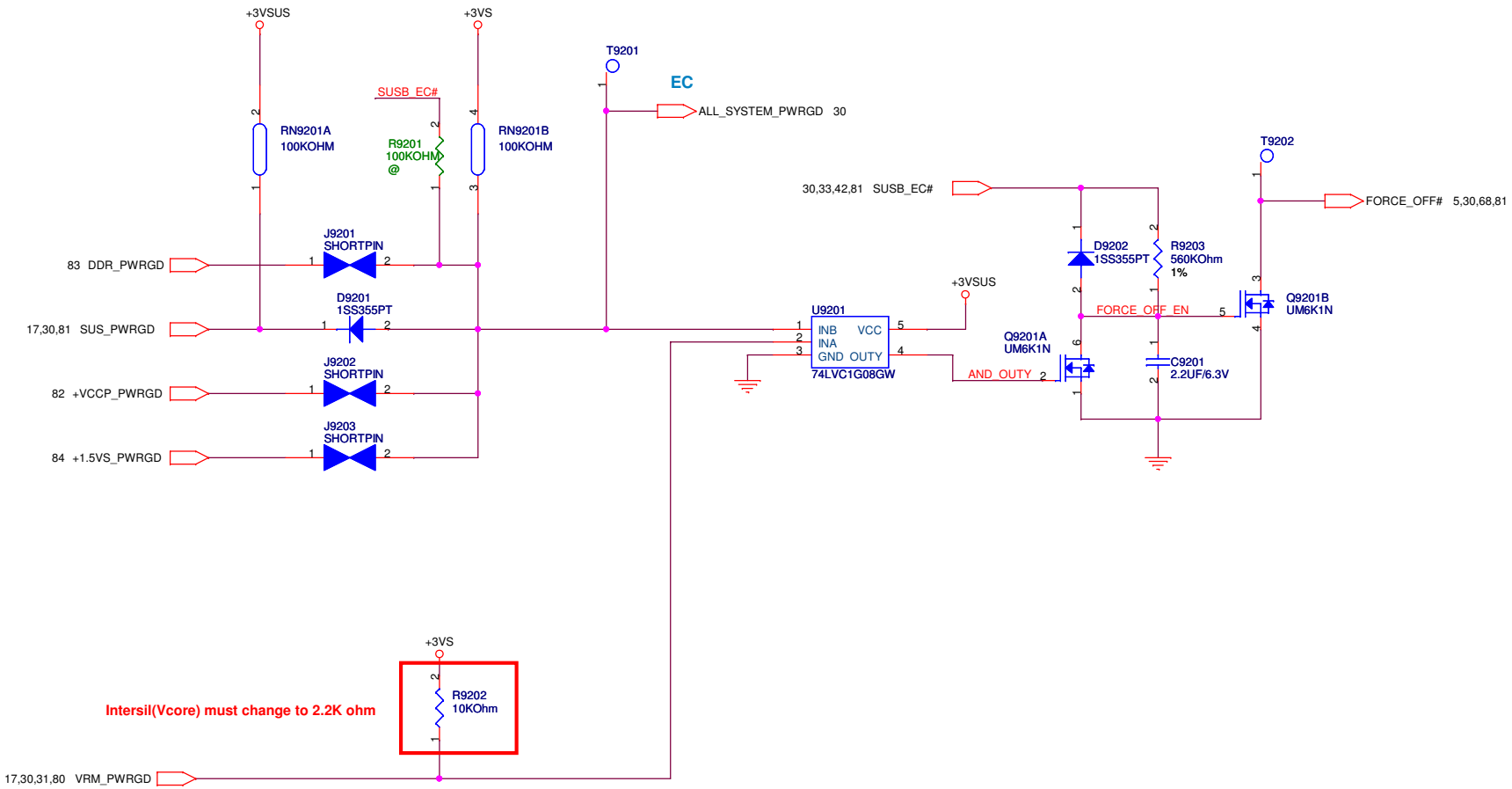

Total count: 8 pcs

<Variant Name>

ASUSTeK COMPUTER INC. NB	Title : POWER_PROTECT	
	Engineer: Morris / Eric	
Size: B	Project Name: K70IJ	Rev: 1.0
Date: Thursday, April 30, 2009	Sheet 92 of 96	

AC_BAT_SYS	AC_BAT_SYS	31,33,68,80,81,82,83,88
BAT	BAT	68,88
+3VAO	+3VAO	81,88
+5VA	+5VA	81
+3VA	+3VA	15,30,33,42,68,81,88
+5VAO	+5VAO	81
+5VO	+5VO	81
+5VSUS	+5VSUS	18,81,82,83,88,91
+5V	+5V	33,41,42,62,91
+5VS	+5VS	17,18,31,32,36,37,38,42,57,72,80,84,91
+3VO	+3VO	81
+3VSUS	+3VSUS	15,16,17,18,30,31,37,81,91,92
+3V	+3V	31,33,41,42,44,46,62,67,91
+3VS	+3VS	4,8,9,12,15,16,17,18,21,30,31,32,33,36,38,39,41,42,46,56,57,72,80,91,92
+12VSUS	+12VSUS	81,91
+12V	+12V	37,42,91
+12VS	+12VS	32,33,42,91
+1.8VO	+1.8VO	83
+1.8V	+1.8V	8,11,12,21,23,24,42,83,84
+0.9V	+0.9V	22,42,83
+0.9VO	+0.9VO	83
+1.5VO	+1.5VO	84
+1.5VS	+1.5VS	5,12,18,42,46,56,84
+VCORE	+VCORE	5,80
+VCCP	+VCCP	4,5,7,8,9,11,12,15,18,39,42,82
+1.05VO	+1.05VO	80,82
A/D_DOCK_IN	A/D_DOCK_IN	68,88

<Variant Name>

ASUSTeK COMPUTER INC. NB

Title : POWER_SIGNAL

Engineer: Morris / Eric

Size	Project Name	Rev
Custom	K70IJ	1.0

Date: Thursday, April 30, 2009 Sheet 93 of 96

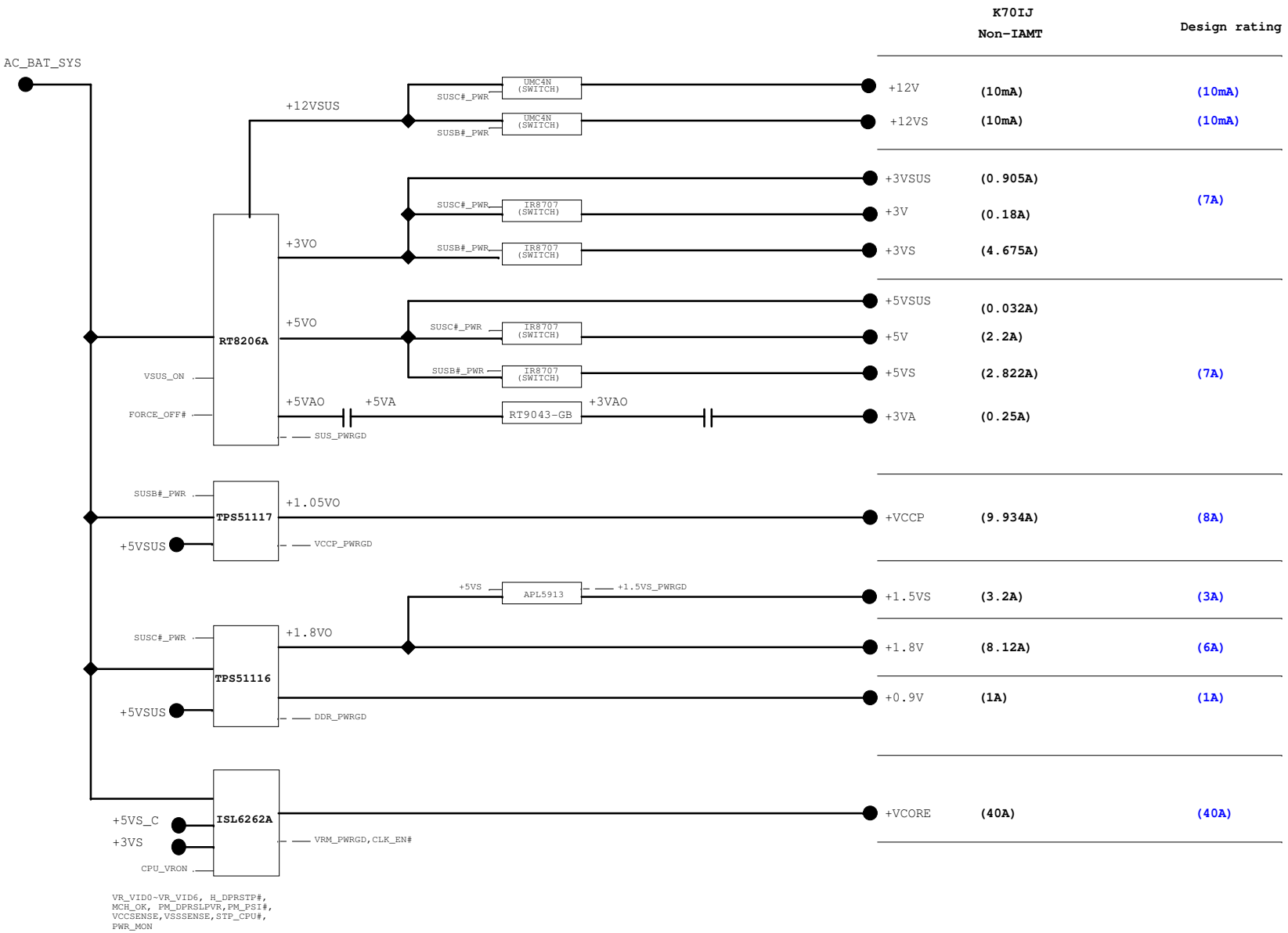
K70IJ
Non-IAMT
Design rating
AC_BAT_SYS
+12VSUS
UMC4N (SWITCH)
SUSC#_PWR
SUSB#_PWR
+12V (10mA) (10mA)
+12VS (10mA) (10mA)
+3VSUS (0.905A)
IR8707 (SWITCH)
+3V (0.18A)
+3VS (4.675A)
(7A)
RT8206A
+3VO
+5VO
+5VSUS (0.032A)
+5V (2.2A)
+5VS (2.822A) (7A)
VSUS_ON
FORCE_OFF#
+5VAO
+5VA
RT9043-GB
+3VAO
+3VA (0.25A)
SUS_PWRGD
TPS51117
+1.05VO
+VCCP (9.934A) (8A)
+5VSUS
VCCP_PWRGD
+5VS
APL5913
+1.5VS_PWRGD
+1.5VS (3.2A) (3A)
TPS51116
+1.8VO
+1.8V (8.12A) (6A)
+0.9V (1A) (1A)
DDR_PWRGD
ISL6262A
+VCORE (40A) (40A)
+5VS_C
+3VS
CPU_VRON
VRM_PWRGD,CLK_EN#
VR_VID0-VR_VID6, H_DPRSTP#,
MCH_OK, PM_DPRSLPVR,PM_PSI#,
VCCSENSE,VSSSENSE,STP_CPU#,
PWR_MON