A8N_A8Dc AMD/MCP67MV/MCP67D BLOCK DIAGRAM

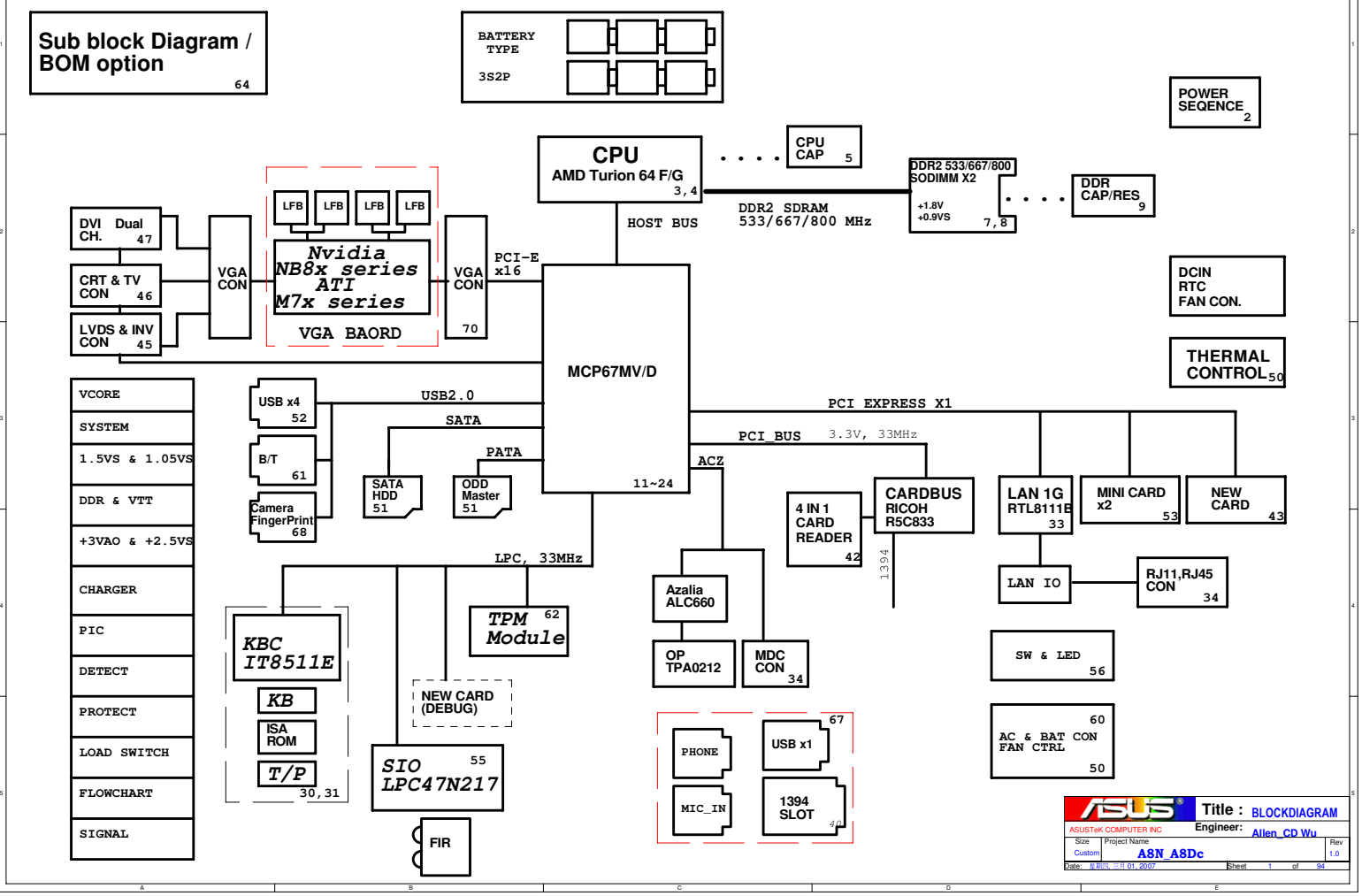

<< Kennedy_Zhang >>

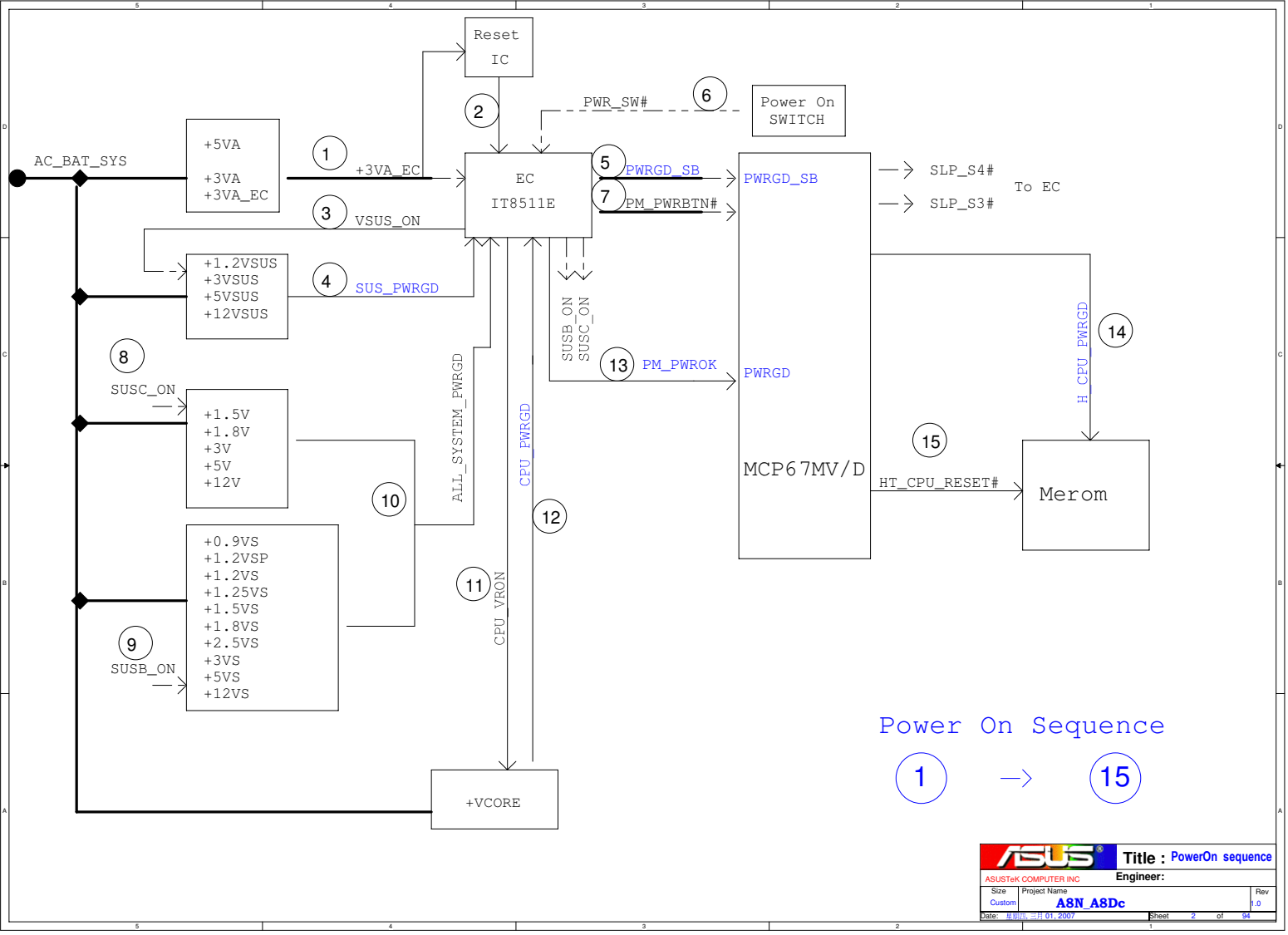

ASUSTeK COMPUTER INC

Title : PowerOn sequence

Engineer:

Size	Project Name	Rev
Custom	A8N_A8Dc	1.0

Date: 星期四, 三月 01, 2007 Sheet 2 of 94

<< Kennedy_Zhang >>

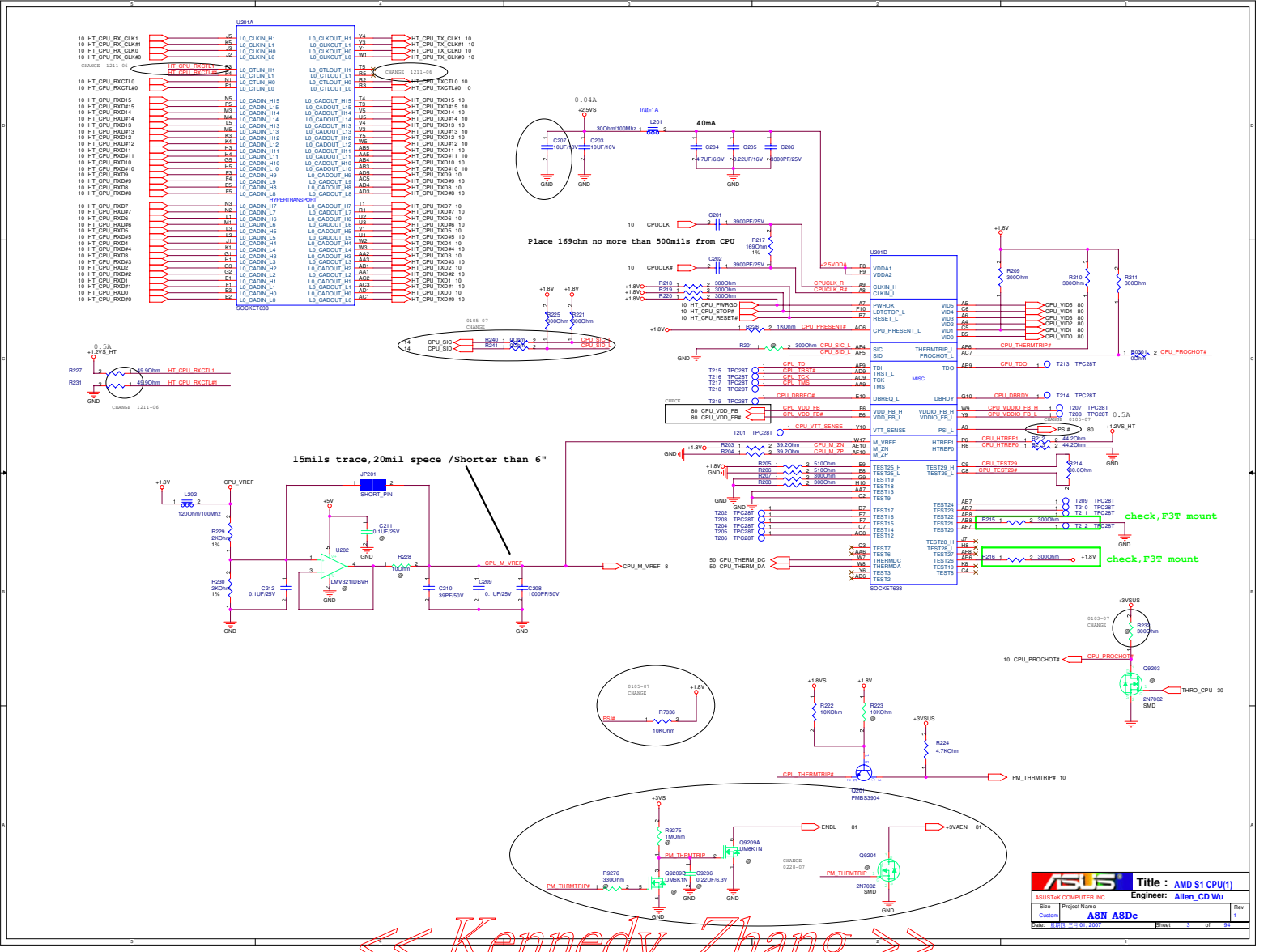

<< Kennedy_Zhang >>

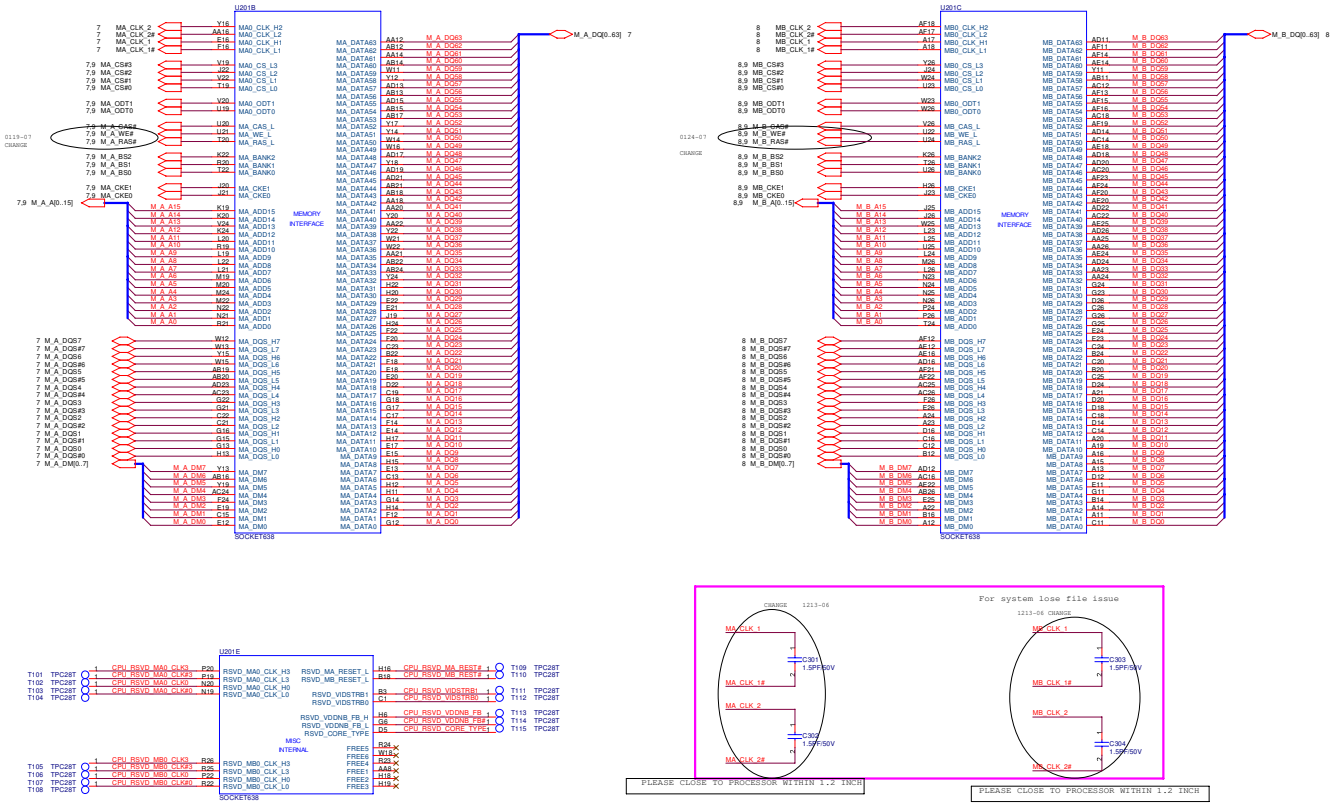

ASUSTeK COMPUTER INC

Title : AMD S1 CPU(2)

Engineer: Allen_CD Wu

Size	Project Name	Rev
Custom	A8N_A8Dc	1

Date: 星期三, 01, 2007 Sheet 4 of 94

<< Kennedy_Zhang >>

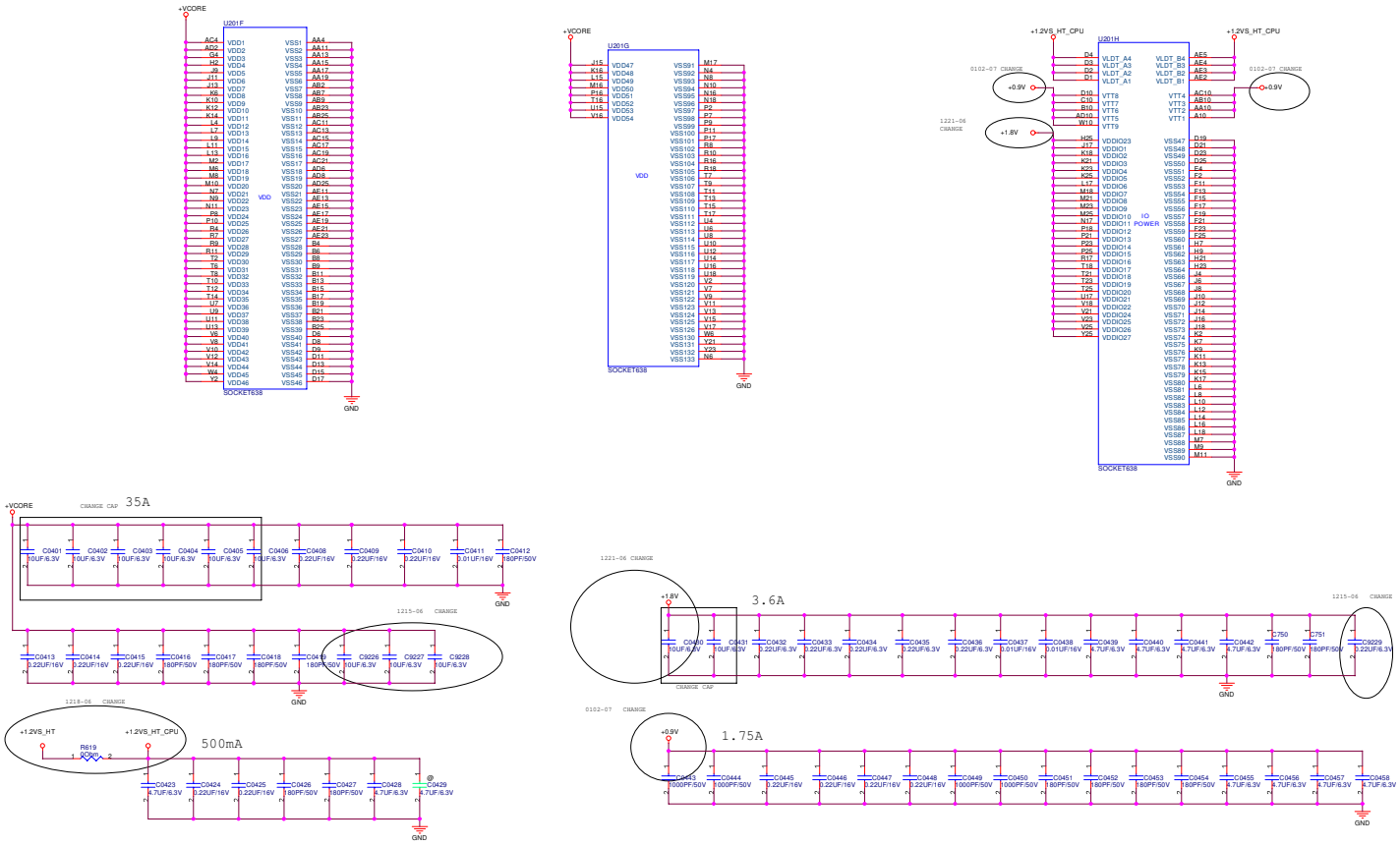

ASUSTek COMPUTER INC	Title : AMD S1 CPU(3)
	Engineer: Allen_CD Wu
Size: Custom	Project Name: A8N_A8Dc
Rev: 1	
Date: 星期三, 三月 01, 2007	Sheet 5 of 94

<< Kennedy_Zhang >>

ASUSTeK COMPUTER INC	Title : BLANK Engineer:	
Size A	Project Name A8N_A8Dc	Rev 0
Date: 星期四, 三月 01, 2007	Sheet 6 of 94	

<< Kennedy_Zhang >>

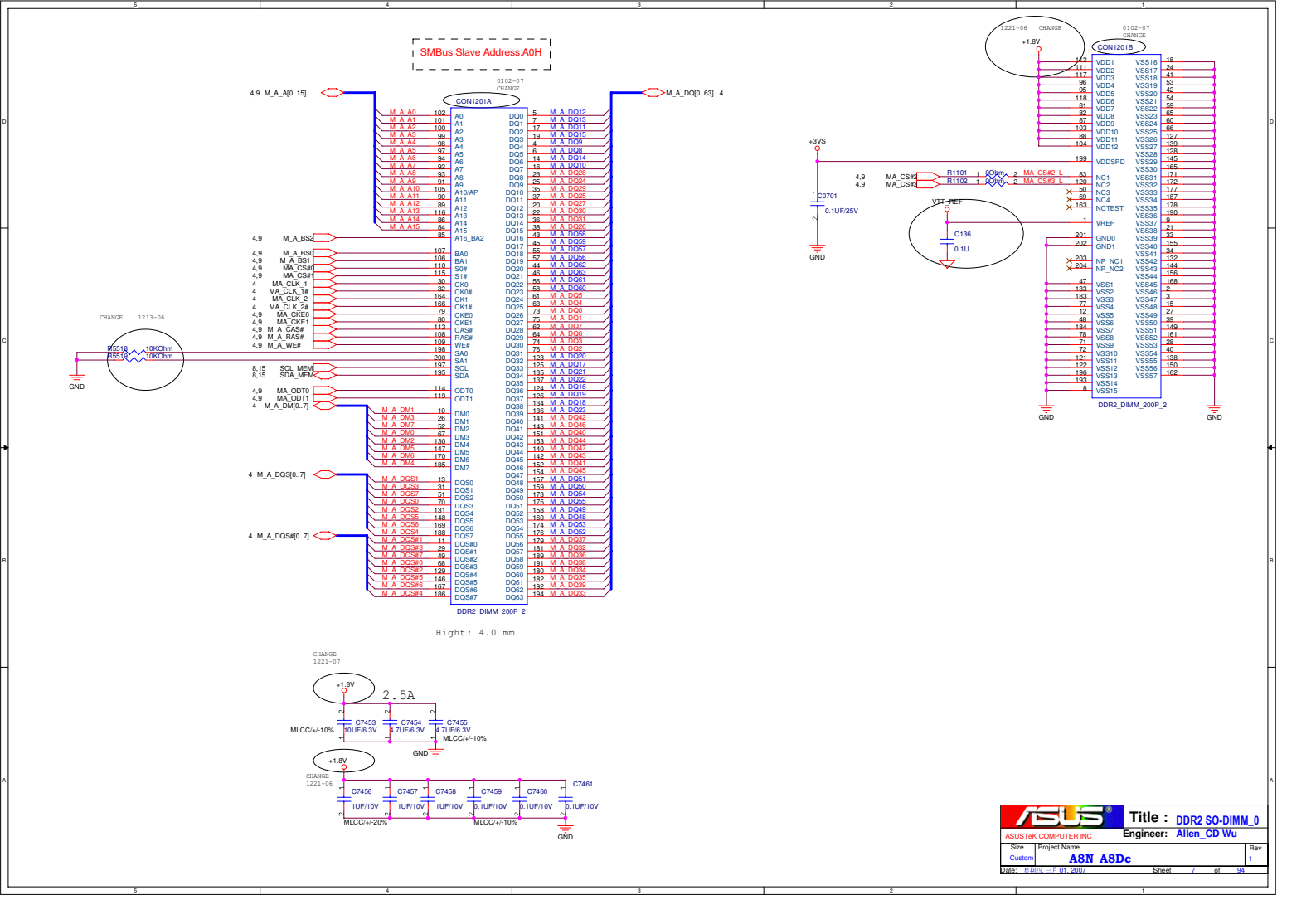

ASUSTeK COMPUTER INC	Title : DDR2 SO-DIMM_0	
	Engineer: Allen_CD Wu	
Size: Custom	Project Name: A8N_A8Dc	Rev: 1
Date: 星期六, 三月 01, 2007	Sheet 7 of 94	

<< Kennedy_Zhang >>

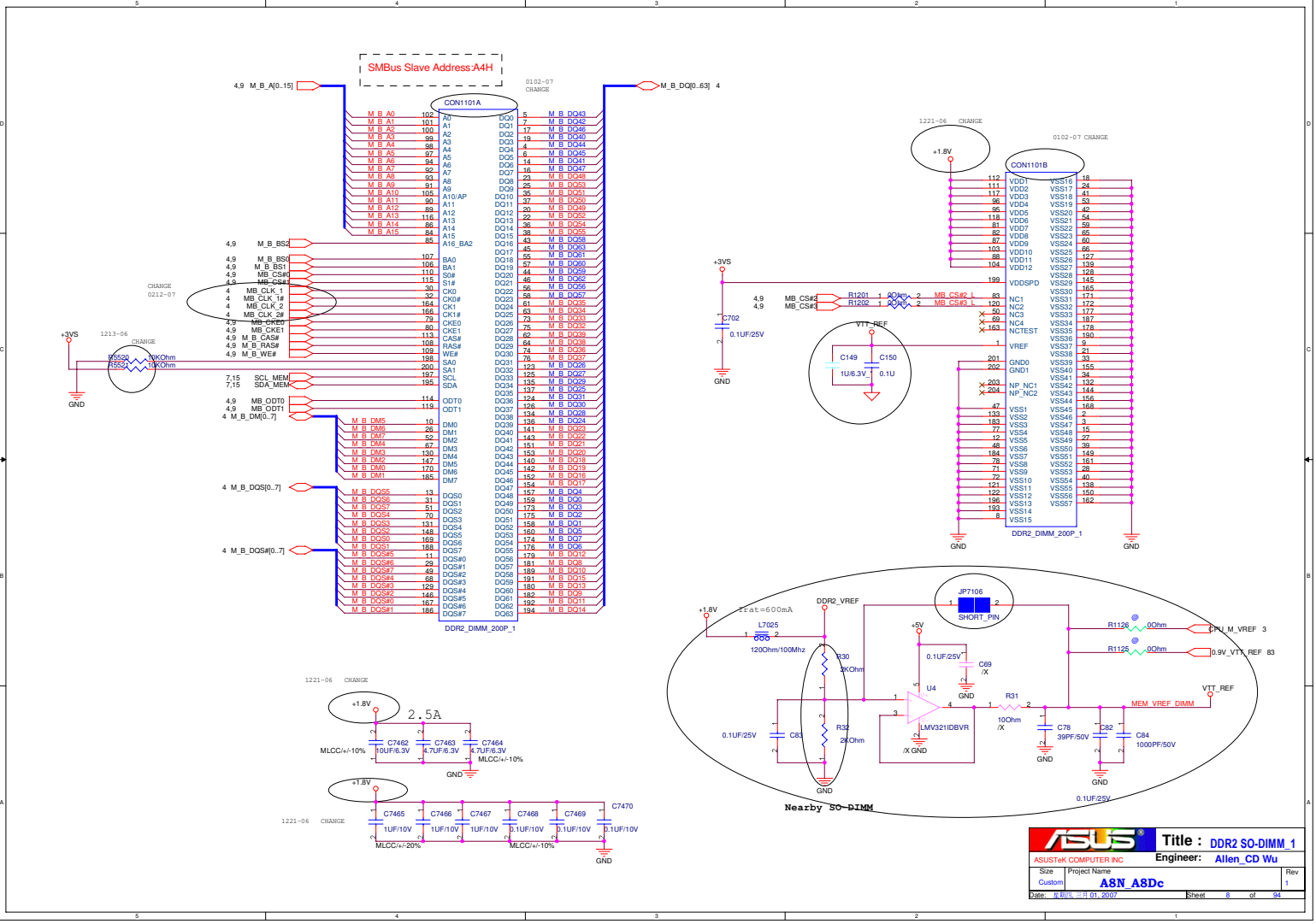

<< Kennedy_Zhang >>

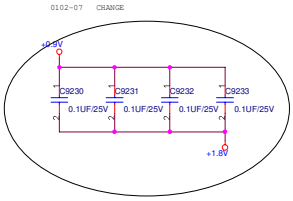

For Address/Command close to the area of plane switched

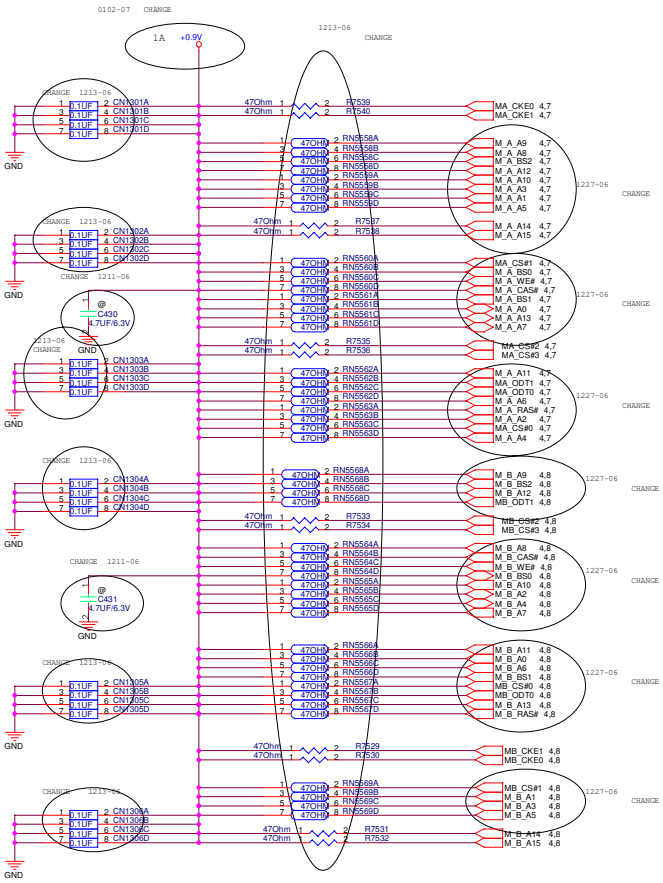

Layout note: Place array cap close to each pullup resistors terminated to +0.9V

ASUSTeK COMPUTER INC	Title : DDR2 TERMINATION		
	Engineer: Allen_CD Wu		
Size: Custom	Project Name: A8N_A8Dc		Rev: 1
Date: 星期五, 三月 01, 2007	Sheet 9 of 94		

<< Kennedy_Zhang >>

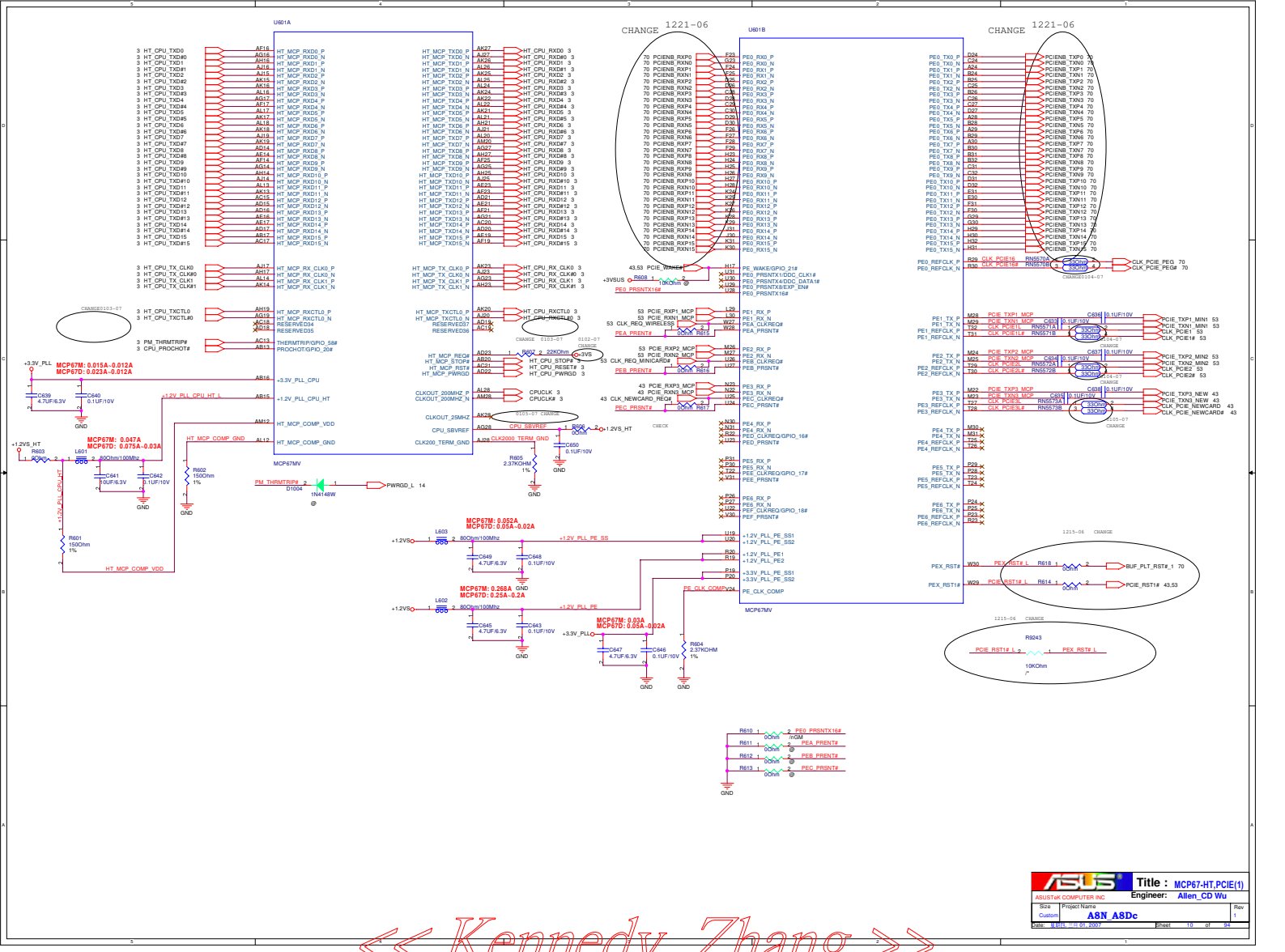

Title : MCP67-HT,PCIE(1)		
ASUSTeK COMPUTER INC	Engineer: Allen_CD Wu	
Size: Custom	Project Name: A8N A8Dc	Rev: 1
Date: 8.BTU. 2007 01.2007	Sheet 10 of 94	

<< Kennedy_Zhang >>

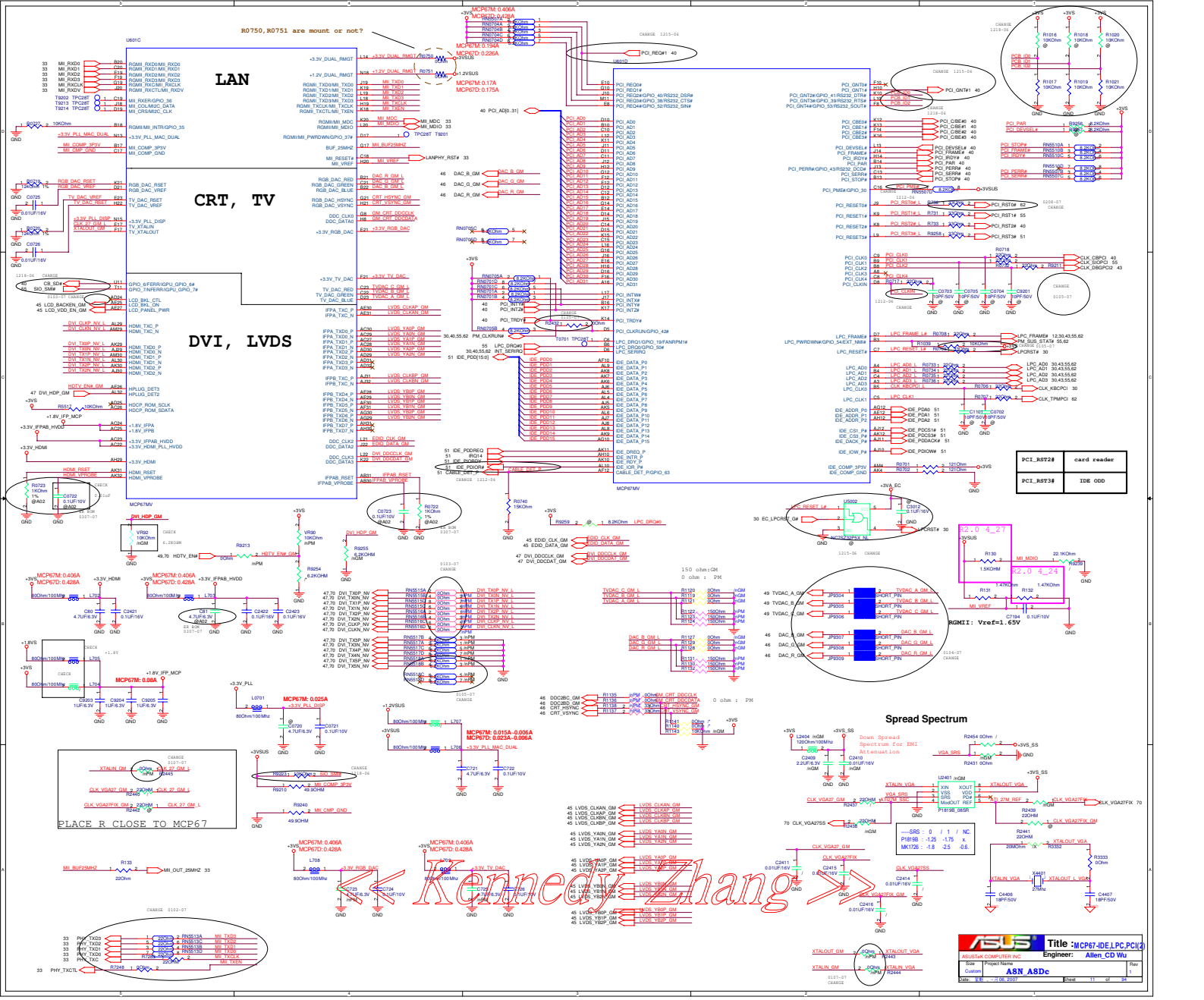

PCI_RST2#	card reader
PCI_RST3#	IDE ODD

KennedyZhang

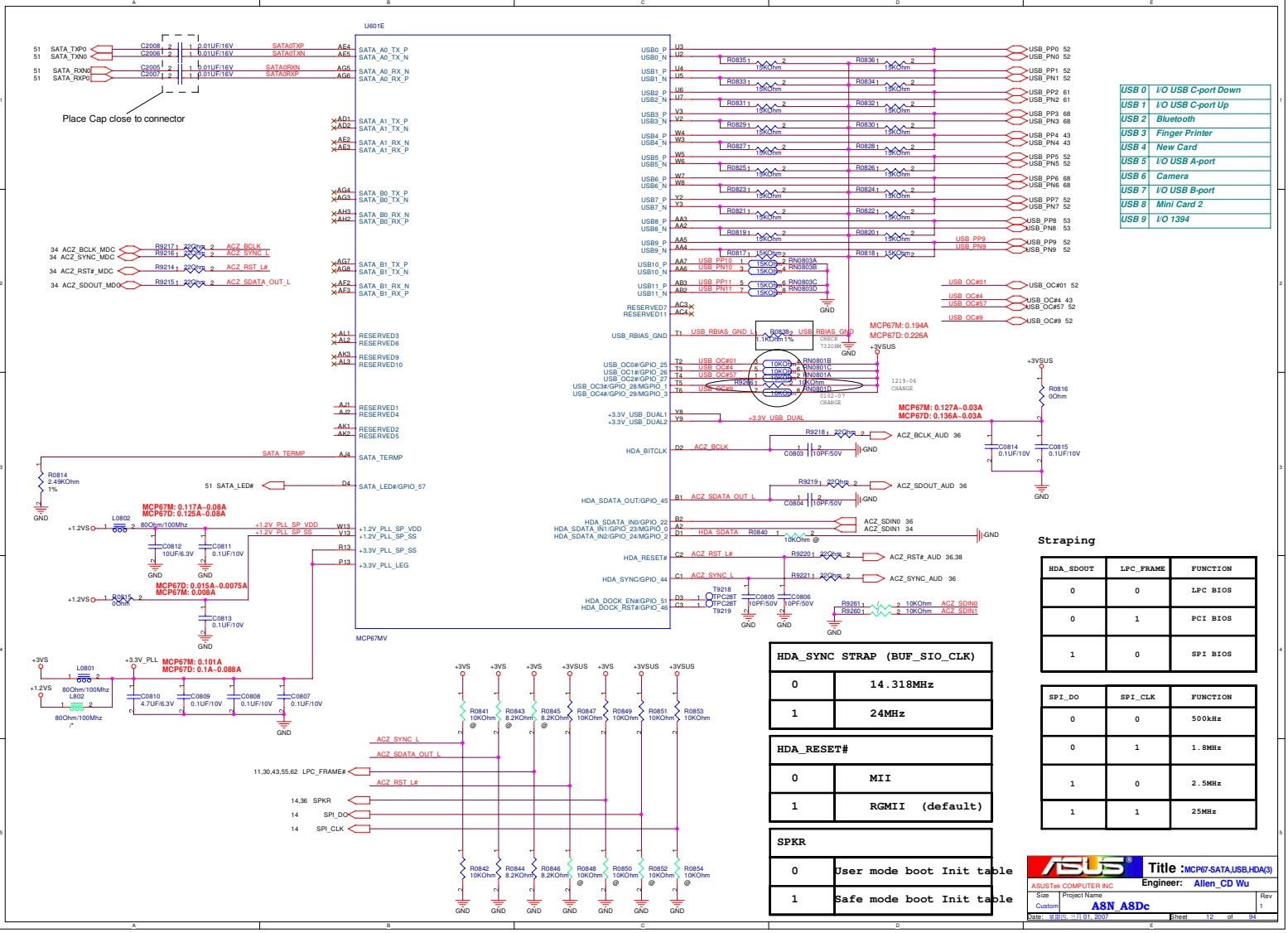

USB 0	I/O USB C-port Down
USB 1	I/O USB C-port Up
USB 2	Bluetooth
USB 3	Finger Printer
USB 4	New Card
USB 5	I/O USB A-port
USB 6	Camera
USB 7	I/O USB B-port
USB 8	Mini Card 2
USB 9	I/O 1394

Straping

HDA_SDOUT	LPC_FRAME	FUNCTION
0	0	LPC BIOS
0	1	PCI BIOS
1	0	SPI BIOS

SPI_DO	SPI_CLK	FUNCTION
0	0	500kHz
0	1	1.8MHz
1	0	2.5MHz
1	1	25MHz

HDA_SYNC STRAP (BUF_SIO_CLK)	
0	14.318MHz
1	24MHz

HDA_RESET#	
0	MII
1	RGMII (default)

SPKR	
0	User mode boot Init table
1	Safe mode boot Init table

ASUSTek COMPUTER INC

Title : MCP67-SATA,USB,HDA(3)

Engineer: Allen_CD Wu

Size	Project Name	Rev
Custom	A8N_A8Dc	1

Date: 星期四, 三月 01, 2007 Sheet 12 of 94

<< Kennedy_Zhang >>

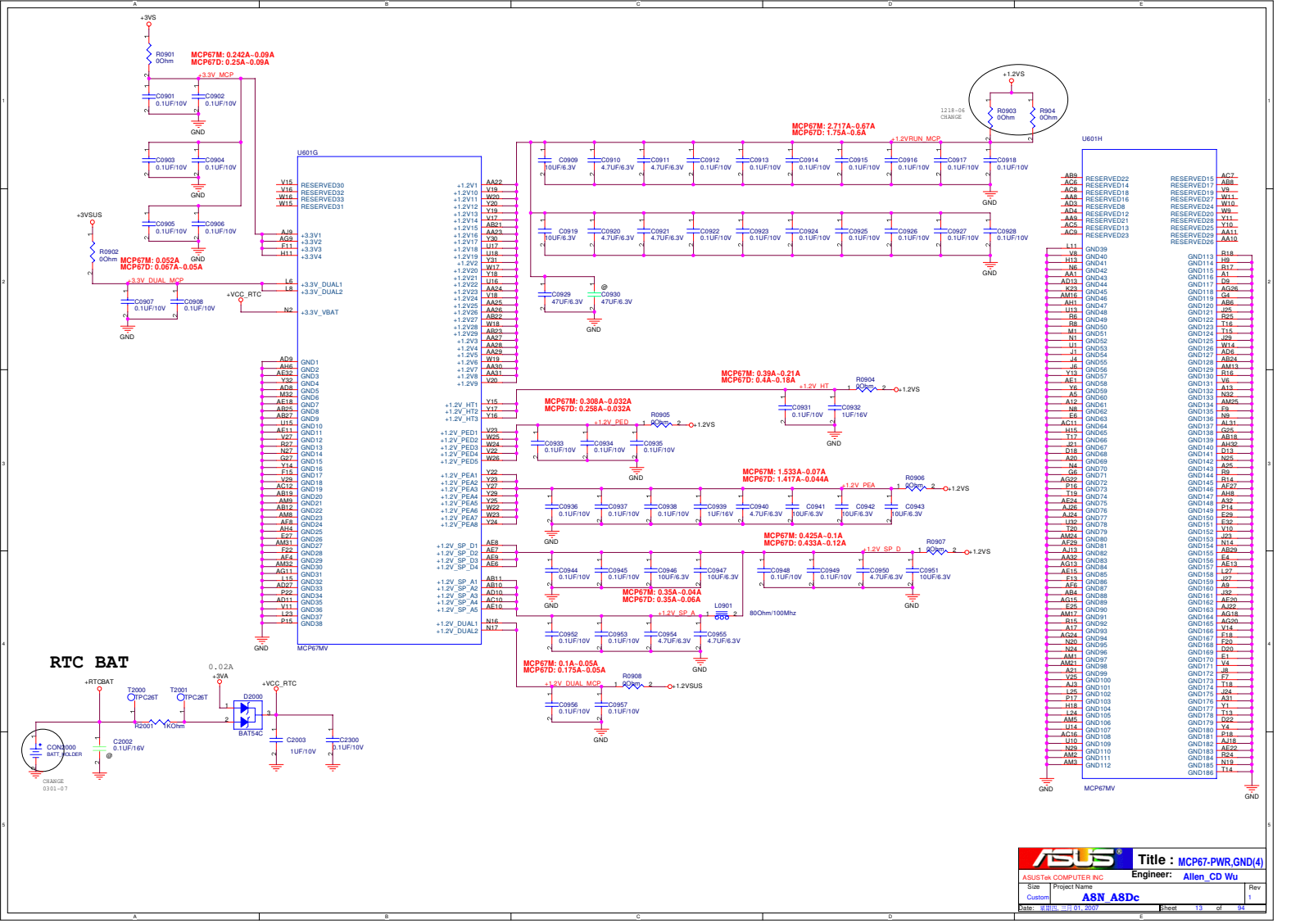

Title : MCP67-PWR,GND(4)		
ASUSTek COMPUTER INC	Engineer: Allen_CD Wu	
Size: Custom	Project Name: A8N_A8Dc	Rev: 1
Date: 星期四, 三月 01, 2007	Sheet 13 of 94	

<< Kennedy_Zhang >>

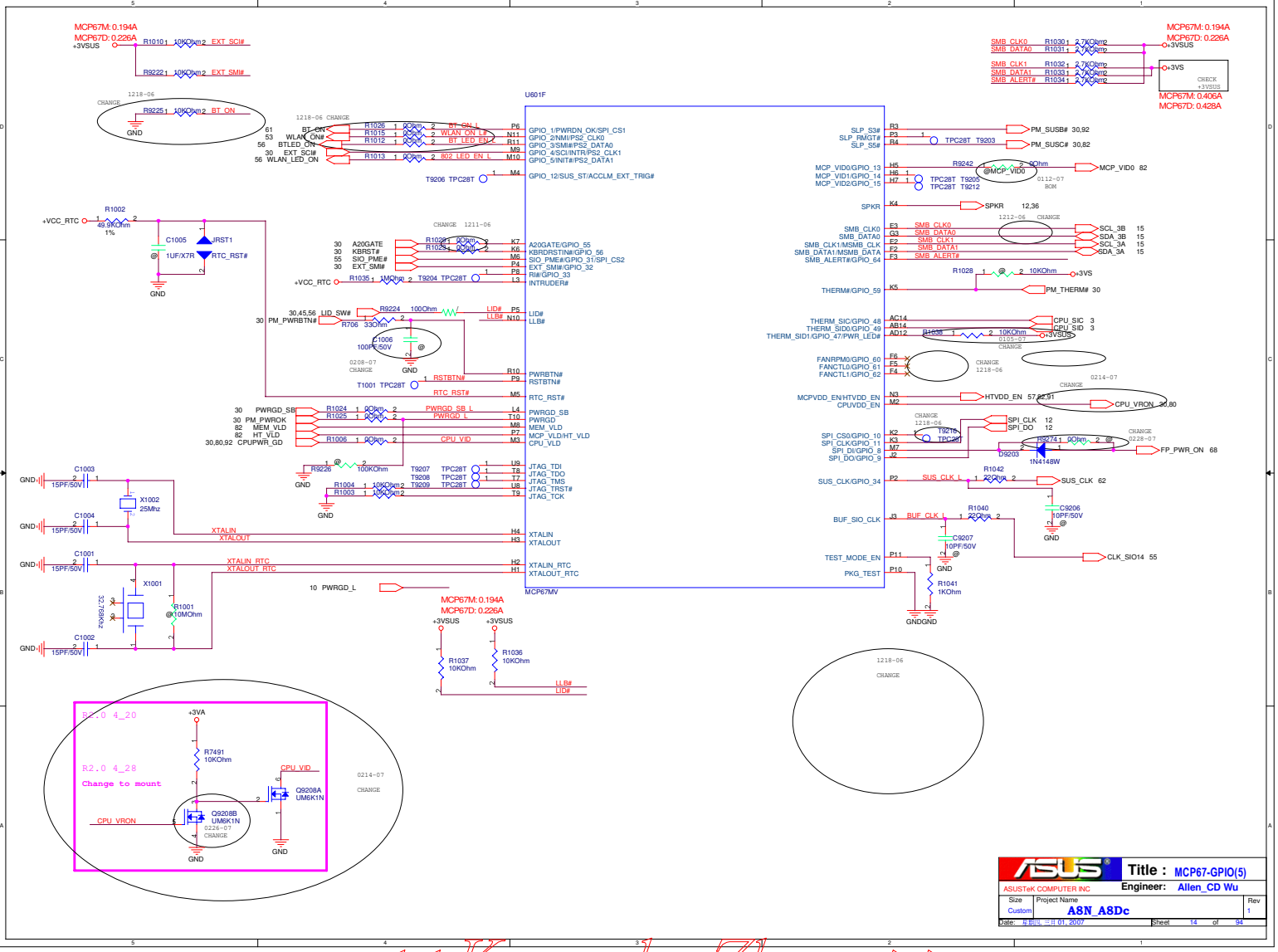

<< Kennedy_Zhang >>

Check

Connect SMLINK and SMBUS
for SMBus 2.0 compliance.

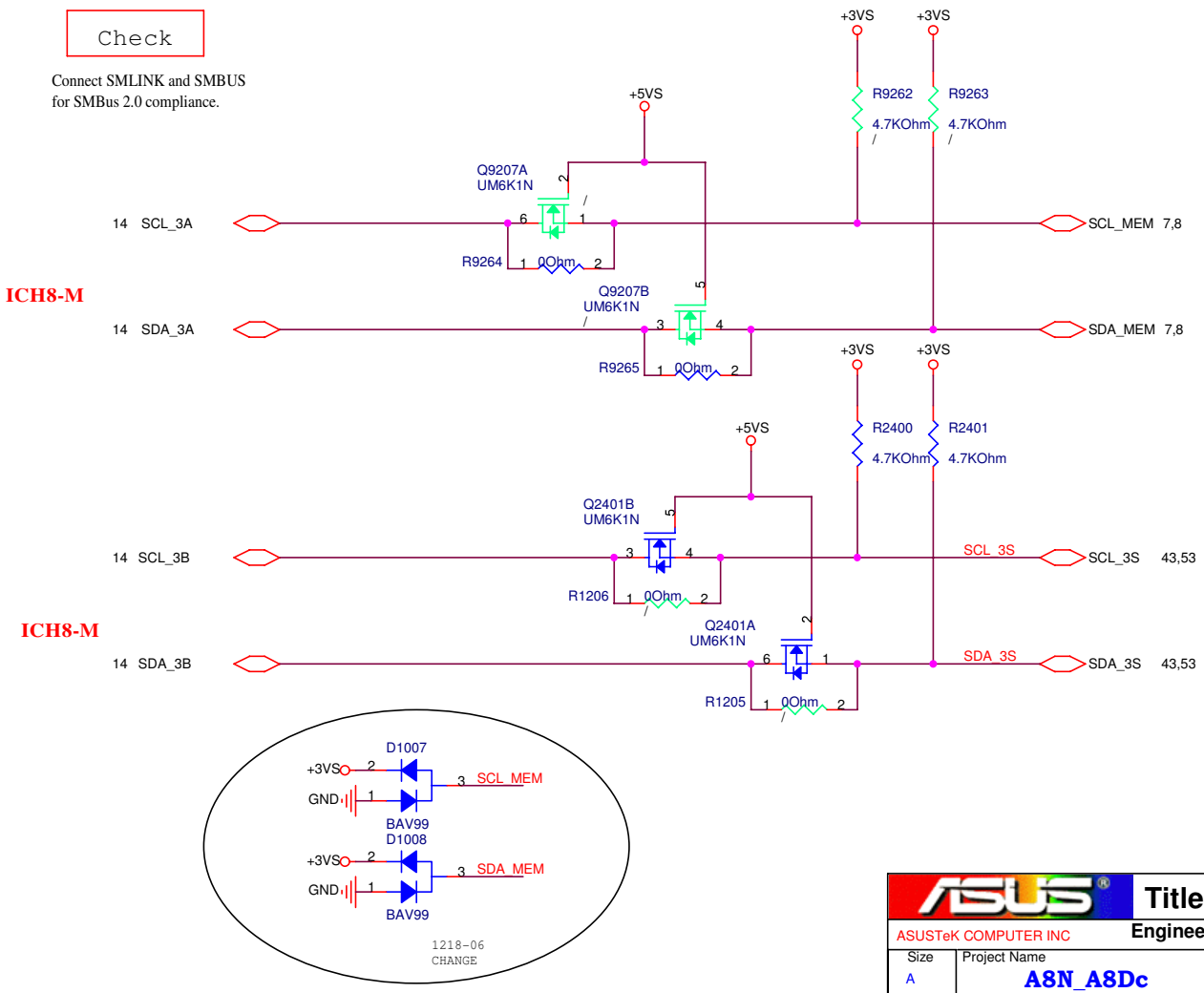

ASUSTeK COMPUTER INC	Title : LEVEL SHIFTER	
	Engineer: Allen_CD Wu	
Size A	Project Name A8N_A8Dc	Rev 1.0
Date: 星期四, 三月 01, 2007	Sheet 15 of 94	

<< Kennedy_Zhang >>

ASUSTeK COMPUTER INC	Title : BLANK	
	Engineer:	
Size: A	Project Name: A8N_A8Dc	Rev: 0
Date: 星期四, 三月 01, 2007	Sheet 16 of 94	

<< Kennedy_Zhang >>

ASUSTeK COMPUTER INC	Title : BLANK	
	Engineer:	
Size: A	Project Name: A8N_A8Dc	Rev: 0
Date: 星期四, 三月 01, 2007	Sheet 17 of 94	

<< Kennedy_Zhang >>

ASUSTeK COMPUTER INC	Title : BLANK	
	Engineer:	
Size: A	Project Name: A8N_A8Dc	Rev: 0
Date: 星期四, 三月 01, 2007	Sheet 18 of 94	

<< Kennedy_Zhang >>

ASUSTeK COMPUTER INC	Title : BLANK Engineer:	
Size A	Project Name **A8N_A8Dc**	Rev 0
Date: 星期四, 三月 01, 2007	Sheet 19 of 94	

<< Kennedy_Zhang >>

ASUSTeK COMPUTER INC	Title : BLANK Engineer:	
Size Custom	Project Name A8N_A8Dc	Rev 0
Date: 星期四, 一月 01, 2007	Sheet 20 of 94	

<< Kennedy_Zhang >>

ASUSTeK COMPUTER INC	Title : BLANK	
	Engineer:	
Size: Custom	Project Name: A8N_A8Dc	Rev: 0
Date: 星期四, 三月 01, 2007	Sheet 21 of 94	

<< Kennedy_Zhang >>

ASUSTeK COMPUTER INC	Title : BLANK Engineer:	
Size Custom	Project Name A8N_A8Dc	Rev 0
Date: 星期四, 三月 01, 2007	Sheet 22 of 94	

<< Kennedy_Zhang >>

ASUSTeK COMPUTER INC	Title : BLANK	
	Engineer:	
Size: Custom	Project Name: A8N_A8Dc	Rev: 0
Date: 星期四, 三月 01, 2007	Sheet 23 of 94	

<< Kennedy_Zhang >>

ASUSTeK COMPUTER INC	Title : BLANK Engineer:	
Size A	Project Name **A8N_A8Dc**	Rev 0
Date: 星期四, 三月 01, 2007	Sheet 24 of 94	

<< Kennedy_Zhang >>

ASUSTeK COMPUTER INC	Title : BLANK	
	Engineer:	
Size: A	Project Name: A8N_A8Dc	Rev: 0
Date: 星期四, 三月 01, 2007	Sheet 25 of 94	

<< Kennedy_Zhang >>

ASUSTeK COMPUTER INC	Title : BLANK	
	Engineer:	
Size: A	Project Name: A8N_A8Dc	Rev: 0
Date: 星期四, 三月 01, 2007	Sheet 26 of 94	

<< Kennedy_Zhang >>

ASUSTeK COMPUTER INC	Title : BLANK Engineer:	
Size A	Project Name **A8N_A8Dc**	Rev 0
Date: 星期四, 三月 01, 2007	Sheet 27 of 94	

<< Kennedy_Zhang >>

ASUSTeK COMPUTER INC	Title : BLANK Engineer:	
Size A	Project Name A8N_A8Dc	Rev 0
Date: 星期四, 三月 01, 2007	Sheet 28 of 94	

<< Kennedy_Zhang >>

ASUSTeK COMPUTER INC	Title : BLANK	
	Engineer:	
Size: Custom	Project Name: A8N_A8Dc	Rev: 1.0
Date: 星期四, 一月 31, 2007	Sheet 29 of 94	

<< Kennedy_Zhang >>

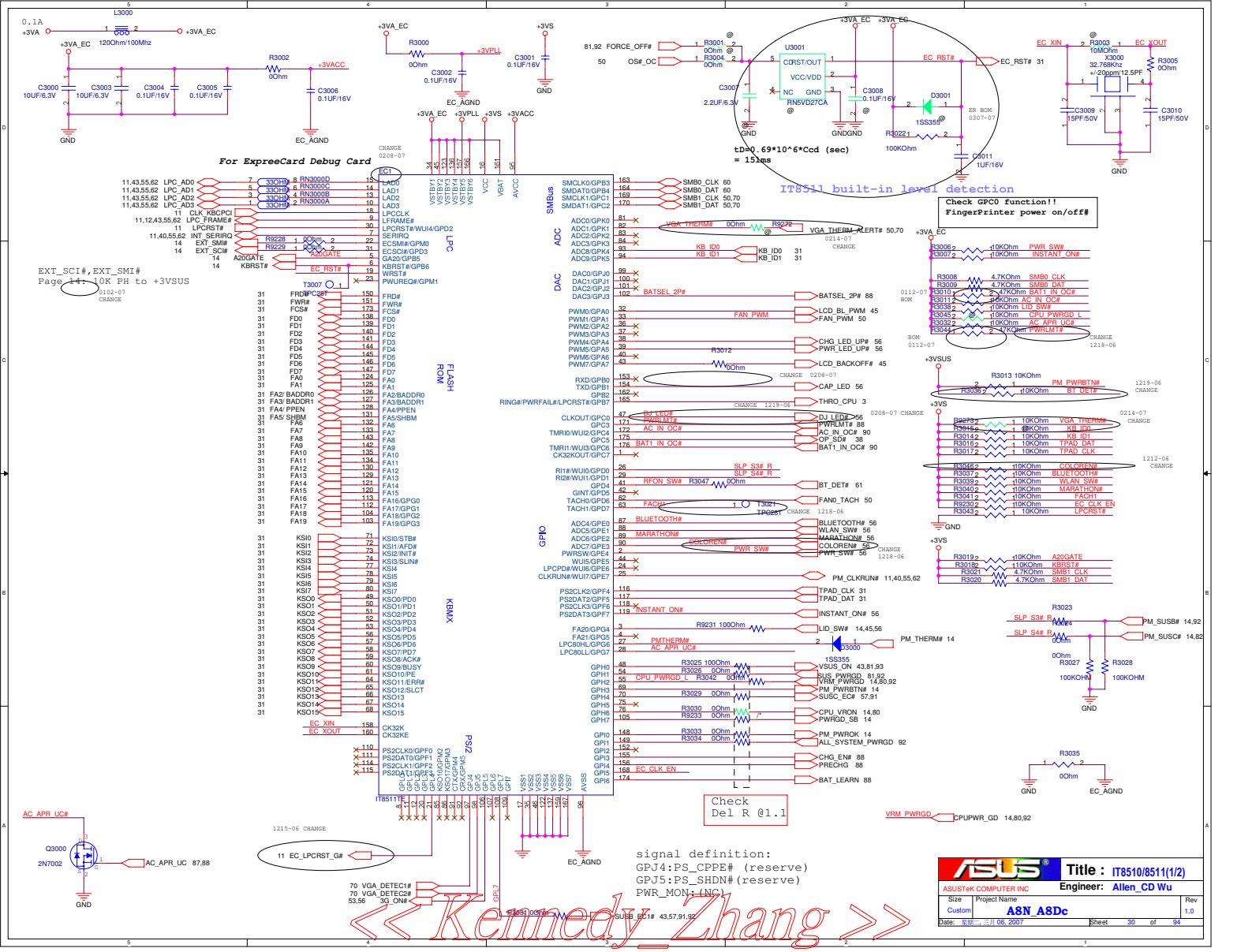
For ExpreeCard Debug Card
IT8511 built-in level detection
Check GPC0 function!!
FingerPrinter power on/off#
EXT_SCI#,EXT_SMI#
Page 14: 10K PH to +3VSUS
tD=0.69*10^6*Ccd (sec)
= 151ms
signal definition:
GPJ4:PS_CPPE# (reserve)
GPJ5:PS_SHDN#(reserve)
PWR_MON:(NC)
Check
Del R @1.1
Title : IT8510/8511(1/2)
ASUSTeK COMPUTER INC
Engineer: Allen_CD Wu
Project Name
A8N_A8Dc
Rev 1.0
Sheet 30 of 94
Kennedy Zhang

10:Determined by EC

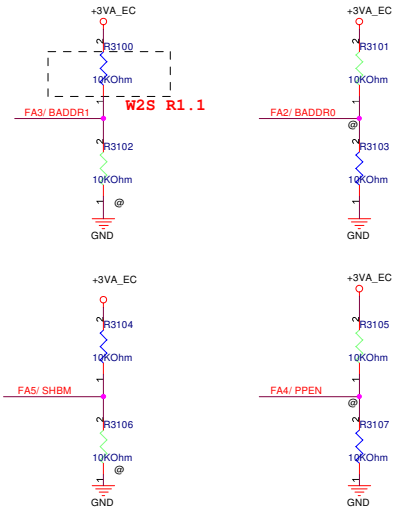

BADDR[1:0]
No pull up:
The register pair to access PNPCFG is 002Eh and 002Fh.
Ext 10K up on BADDR0:
The register pair to access PNPCFG is 004Eh and 004Fh.
Ext 10K up on BADDR1:
The register pair to access PNPCFG is determined by EC domain registers SWCBALR and SWCBAHR.

SHBM
No pull up:
disable shared memory with host BIOS
Ext 10K up:
enable shared memory with host BIOS

PPEN
No pull up:
Normal
Ext 10K up:
KBS interface pins are switched to parallel port interface for in-system programming.

KBDDT1	KBDDT0	Matrix
1	1	US
1	0	UK
0	1	JP

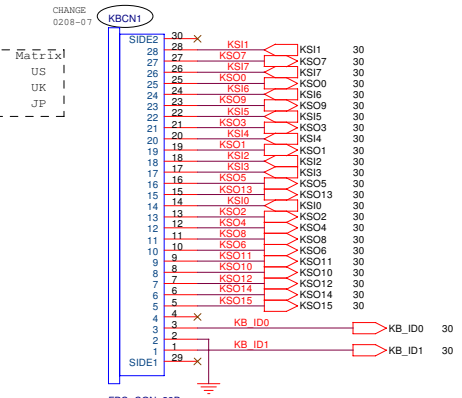

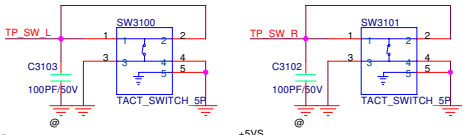

Touch Pad

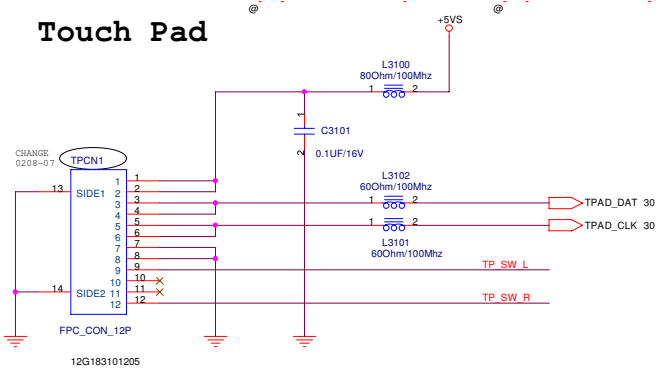

8M TSOP

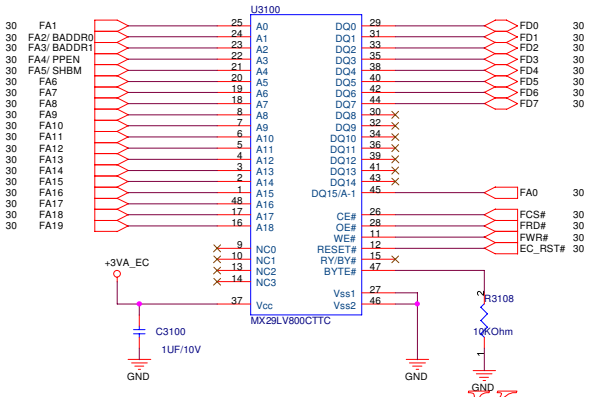

<< Kennedy_Zhang >>

ASUSTeK COMPUTER INC	Title : IT8510/8511(2/2)	
	Engineer: Allen_CD Wu	
Size: Custom	Project Name: A8N_A8Dc	Rev: 1.0
Date: 星期四, 三月 01, 2007	Sheet 31 of 94	

ASUSTeK COMPUTER INC	Title : BLANK Engineer:	
Size A	Project Name A8N_A8Dc	Rev 0
Date: 星期四, 三月 01, 2007	Sheet 32 of 94	

<< Kennedy_Zhang >>

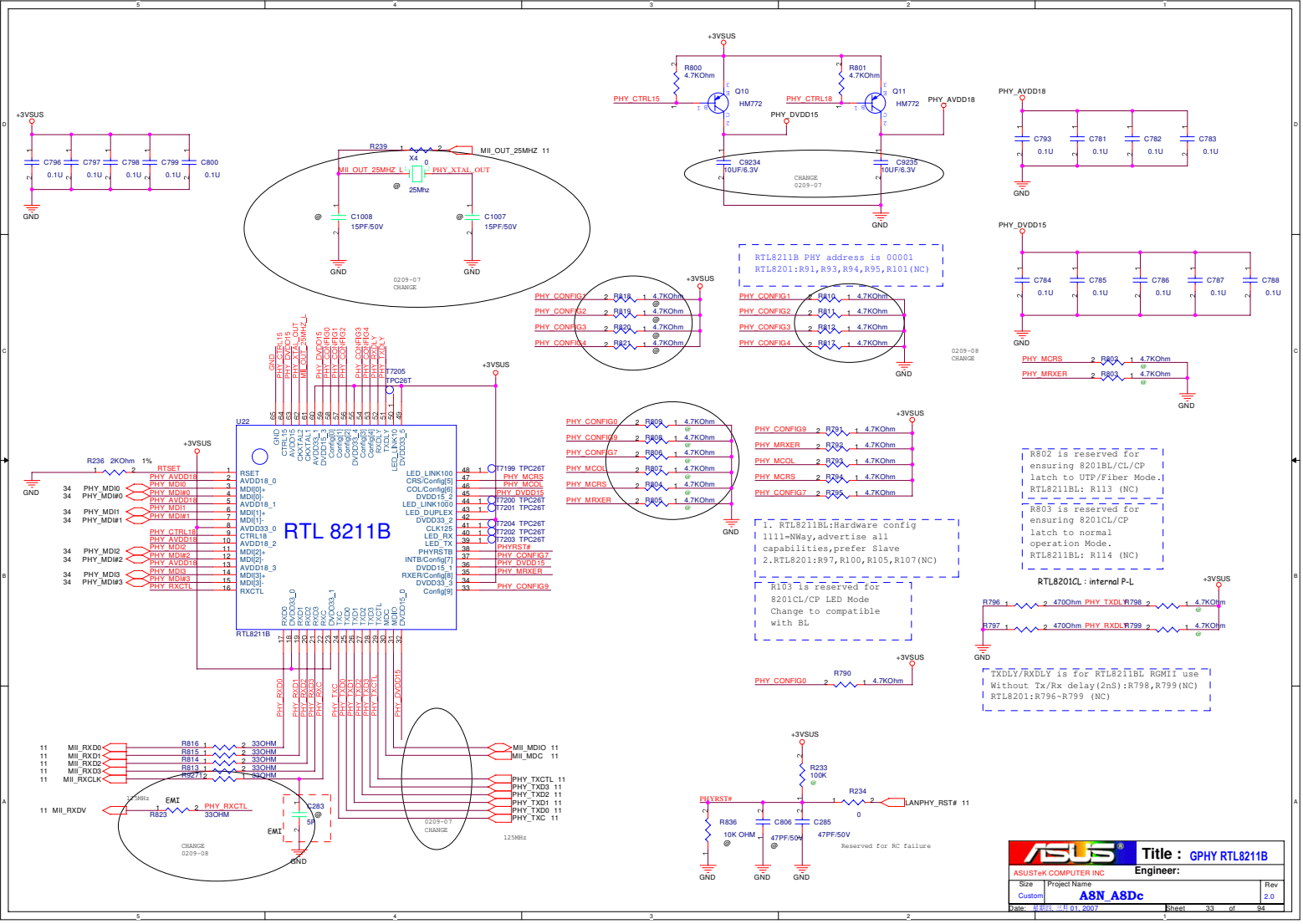

<< Kennedy_Zhang >>

LAN PORT

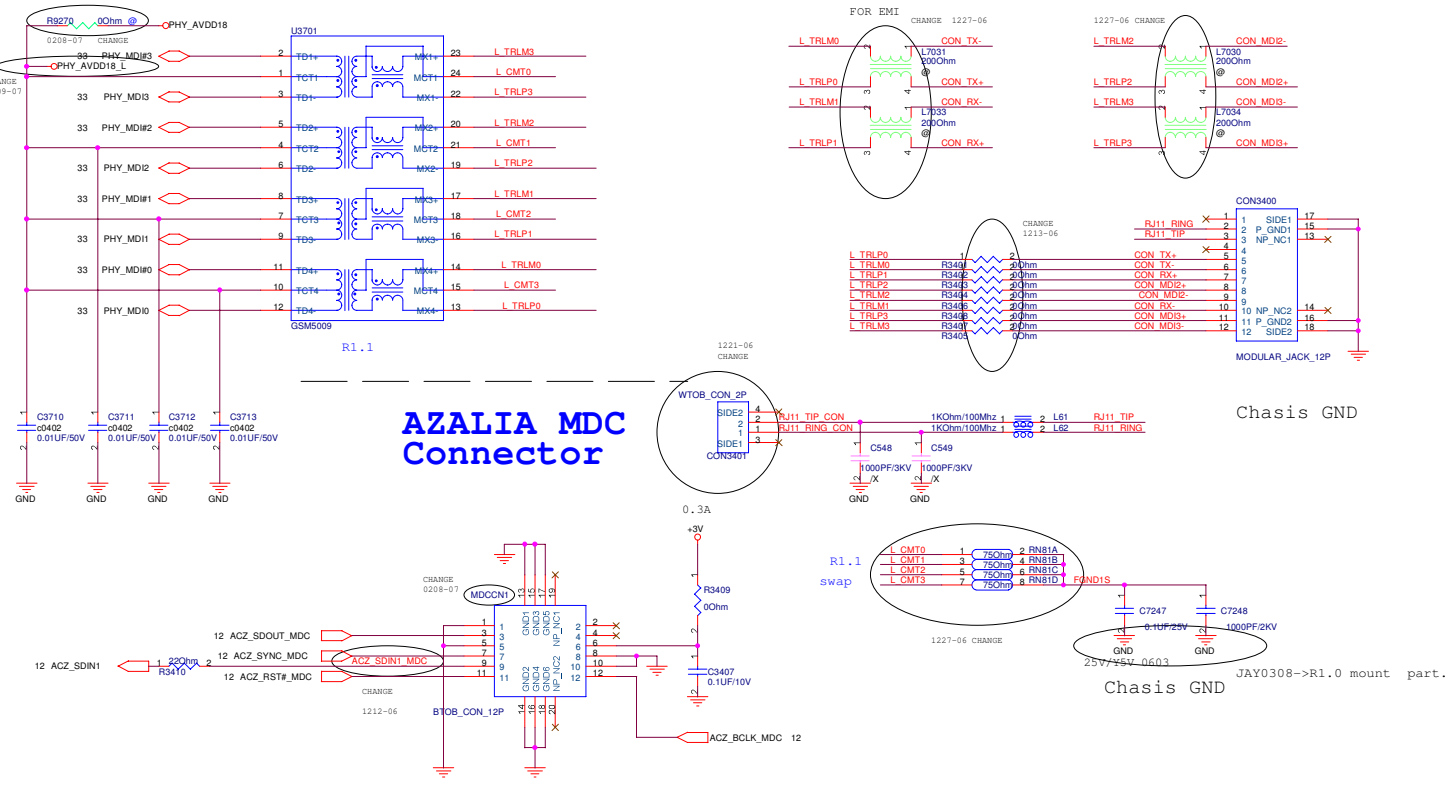

ASUSTeK COMPUTER INC	Title : RJ11+45 , MDC	
	Engineer: Allen_CD Wu	
Size B	Project Name A8N_A8Dc	Rev 1.0
Date: 星期四, 一月 01, 2007	Sheet 34 of 94	

<< Kennedy_Zhang >>

ASUSTeK COMPUTER INC	Title : BLANK	
	Engineer:	
Size: A	Project Name: A8N_A8Dc	Rev: 0
Date: 星期四, 三月 01, 2007	Sheet 35 of 94	

<< Kennedy_Zhang >>

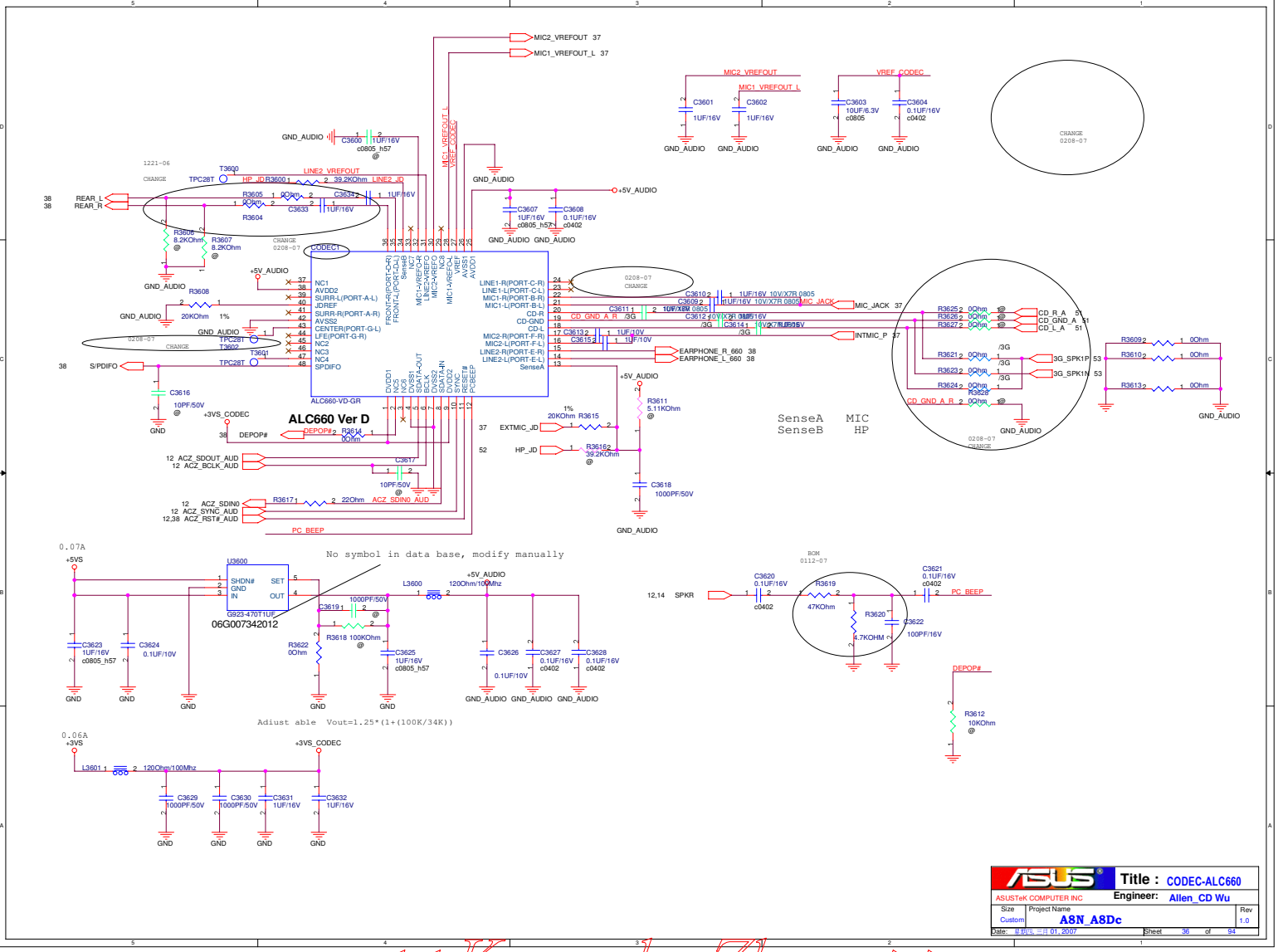

ASUSTeK COMPUTER INC	Title : CODEC-ALC660	Engineer: Allen_CD Wu
Size: Custom	Project Name: A8N_A8Dc	Rev: 1.0
Date: 星期五, 三月 01, 2007	Sheet 36 of 94	

<< Kennedy_Zhang >>

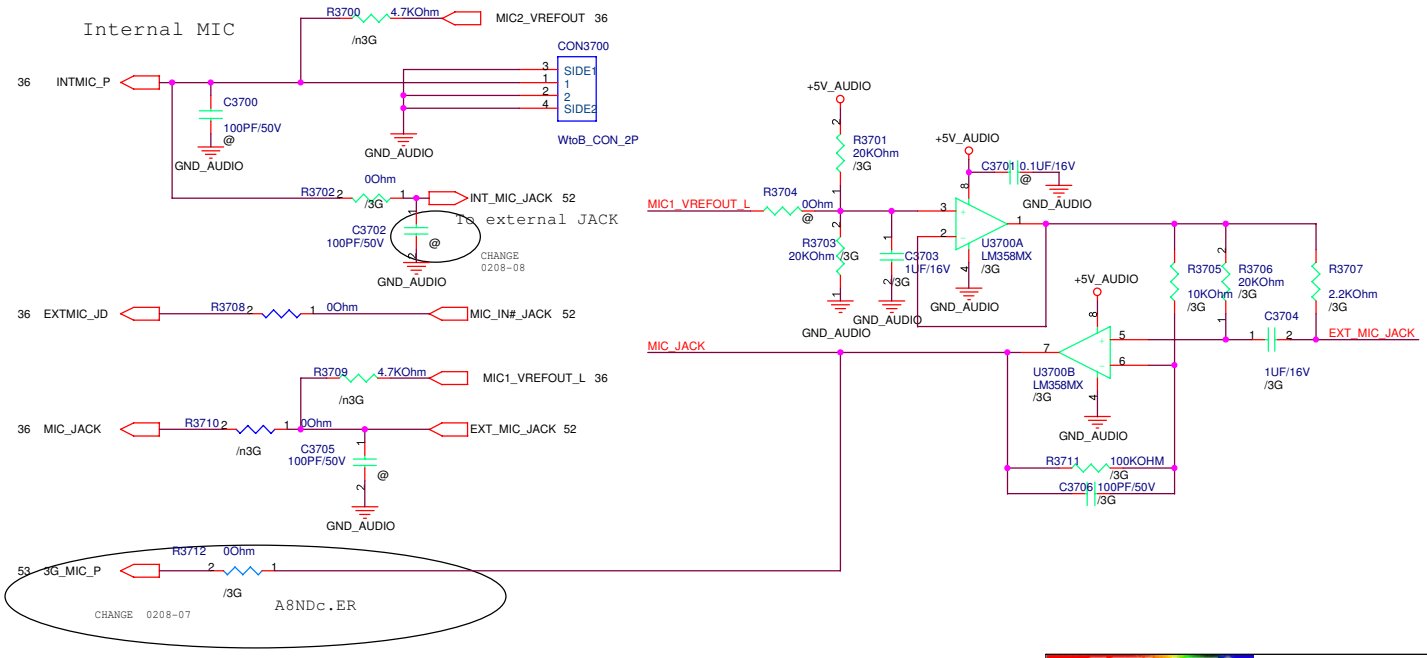

ASUSTeK COMPUTER INC	Title : AUDIO-MIC	
	Engineer: Allen_CD Wu	
Size: Custom	Project Name: A8N_A8Dc	Rev: 1.0
Date: 星期四, 三月 01, 2007	Sheet 37 of 94	

<< Kennedy_Zhang >>

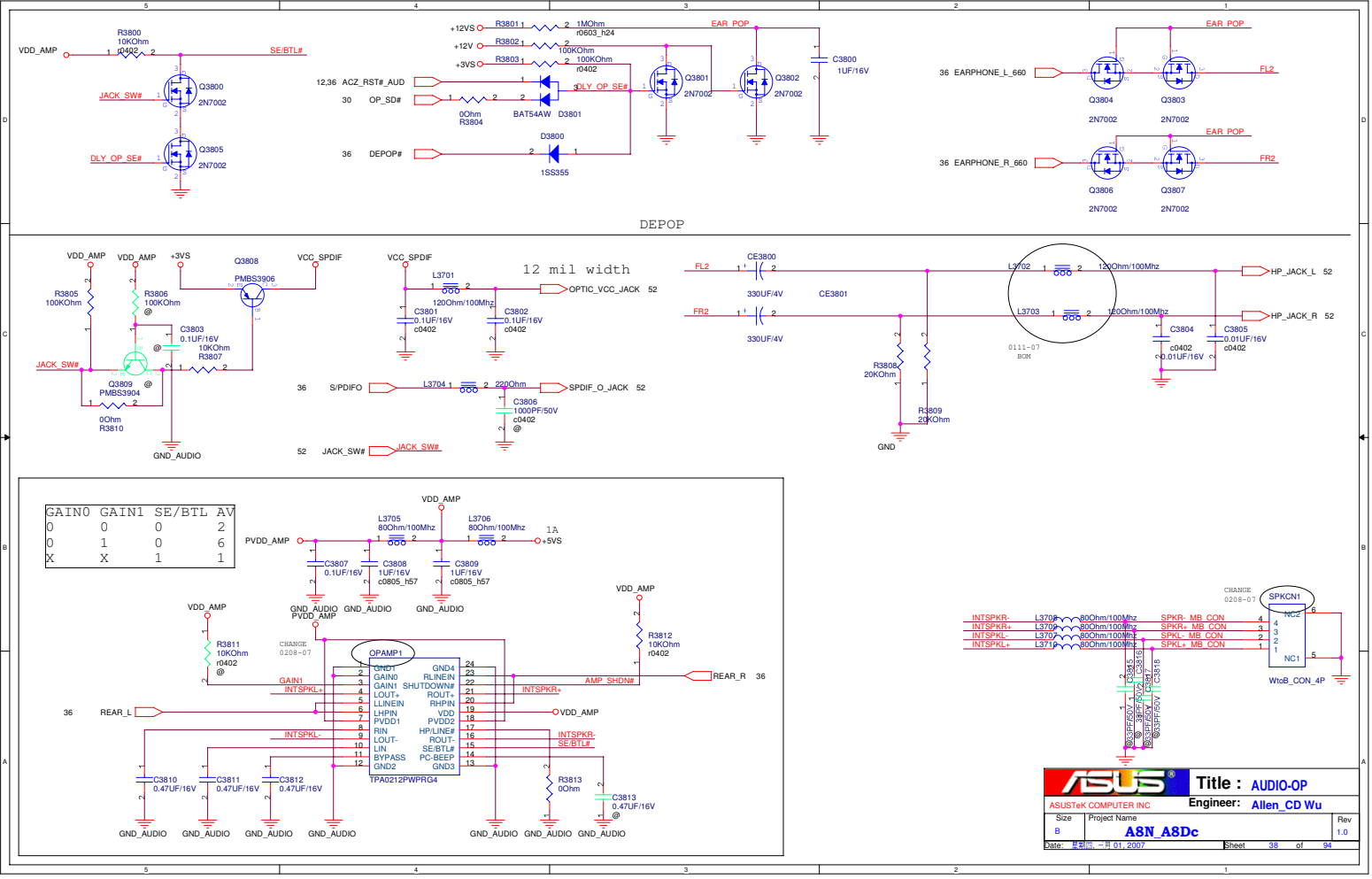

<< Kennedy_Zhang >>

ASUSTeK COMPUTER INC	Title : BLANK	
	Engineer:	
Size: A	Project Name: A8N_A8Dc	Rev: 0
Date: 星期四, 三月 01, 2007	Sheet 39 of 94	

<< Kennedy_Zhang >>

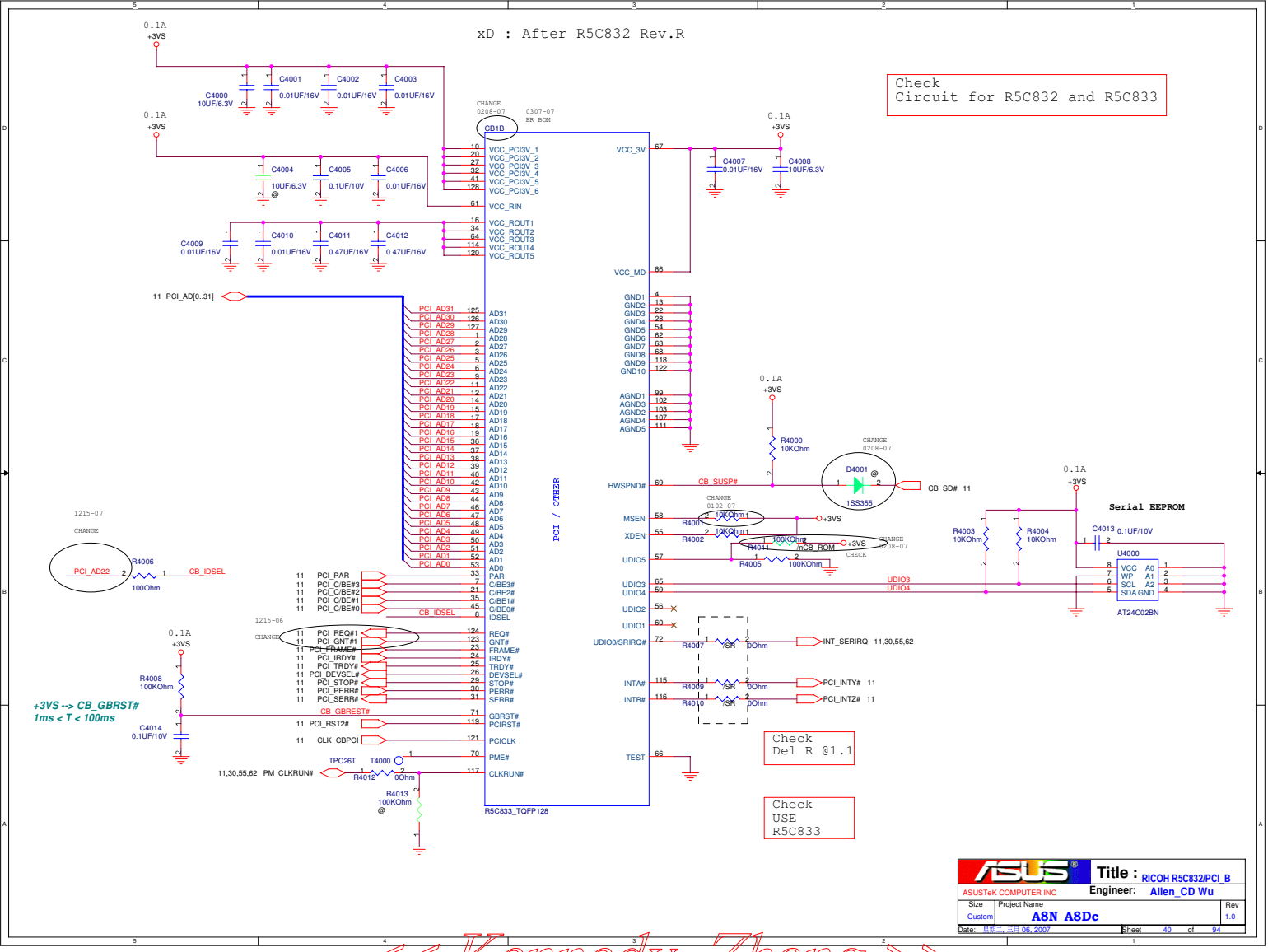

<< Kennedy_Zhang >>

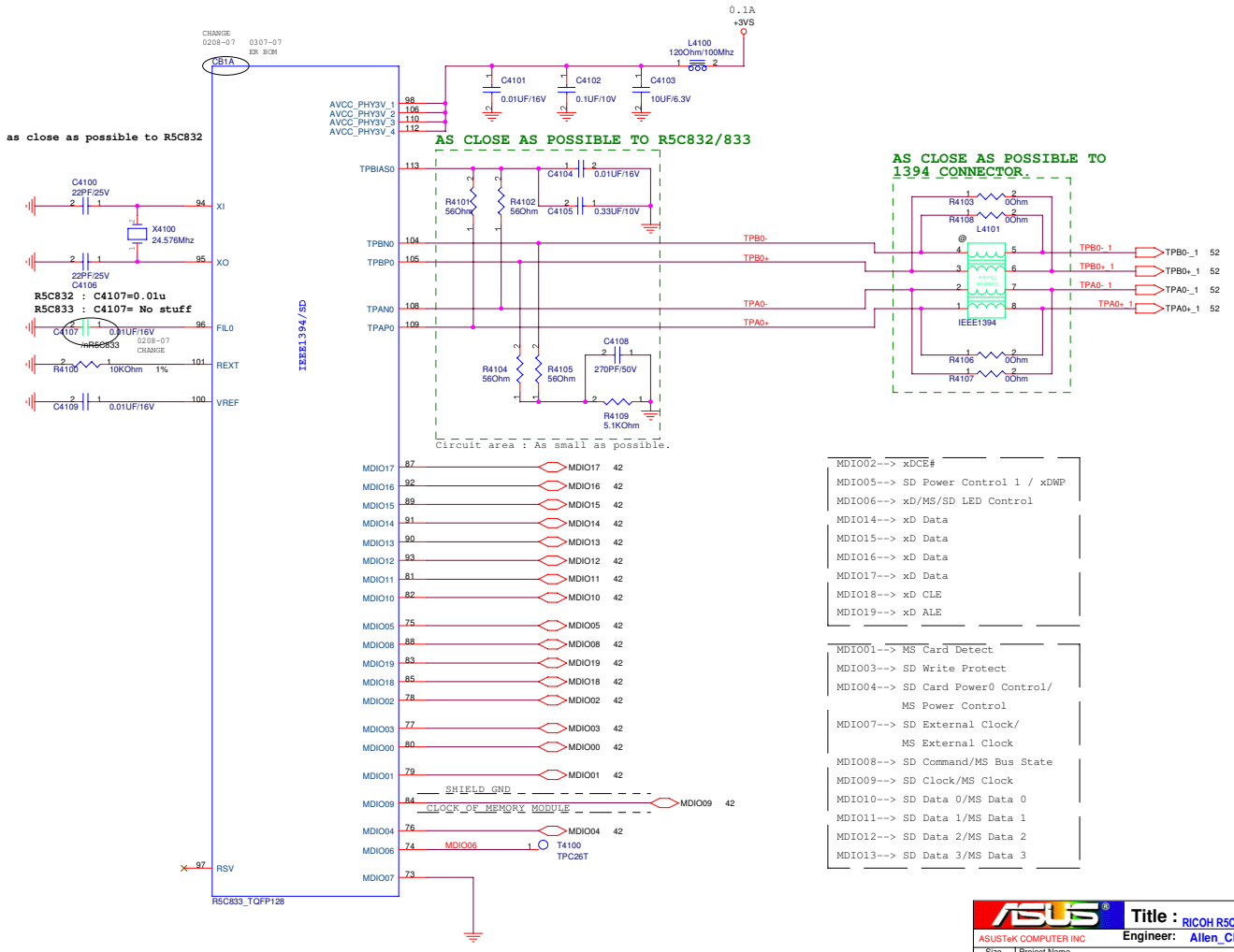

MDIO02--> xDCE#
MDIO05--> SD Power Control 1 / xDWP
MDIO06--> xD/MS/SD LED Control
MDIO14--> xD Data
MDIO15--> xD Data
MDIO16--> xD Data
MDIO17--> xD Data
MDIO18--> xD CLE
MDIO19--> xD ALE

MDIO01--> MS Card Detect
MDIO03--> SD Write Protect
MDIO04--> SD Card Power0 Control/
MS Power Control
MDIO07--> SD External Clock/
MS External Clock
MDIO08--> SD Command/MS Bus State
MDIO09--> SD Clock/MS Clock
MDIO10--> SD Data 0/MS Data 0
MDIO11--> SD Data 1/MS Data 1
MDIO12--> SD Data 2/MS Data 2
MDIO13--> SD Data 3/MS Data 3

ASUSTeK COMPUTER INC	Title : RICOH R5C832/PCI_A	Engineer: Allen_CD Wu
Size: Custom	Project Name: A8N_A8Dc	Rev: 1.0
Date: 星期二, 三月 06, 2007	Sheet 41 of 94	

<< Kennedy_Zhang >>

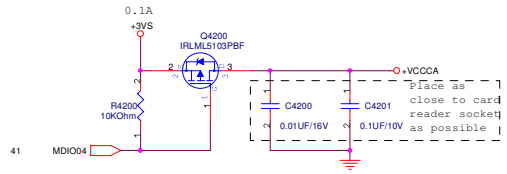

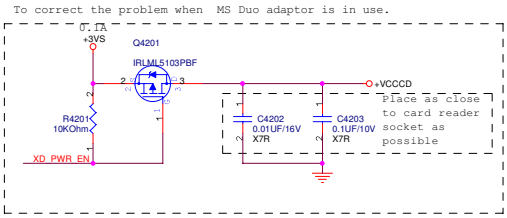

Solve MS Duo Adaptor short issue.

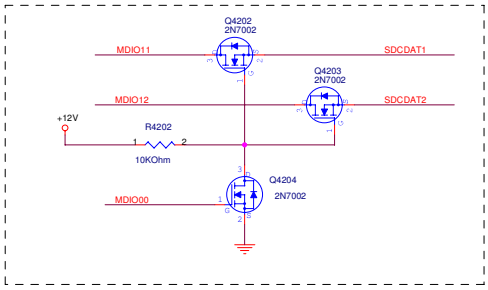

MDIO00--> SD Card Detect
MDIO001--> MS Card Detect
MDIO003--> SD Write Protect
MDIO004--> SD Card Power0 Control/
MS Power Control
MDIO008--> SD Command/MS Bus State
MDIO009--> SD Clock/MS Clock
MDIO010--> SD Data 0/MS Data 0
MDIO011--> SD Data 1/MS Data 1
MDIO012--> SD Data 2/MS Data 2
MDIO013--> SD Data 3/MS Data 3

MDIO02--> xDCE#
MDIO05--> SD Power Control 1 / xDWP
MDIO06--> xD/MS/SD LED Control
MDIO14--> xD Data
MDIO15--> xD Data
MDIO16--> xD Data
MDIO17--> xD Data
MDIO18--> xD CLE
MDIO19--> xD ALE

Check
Change other p/n!!

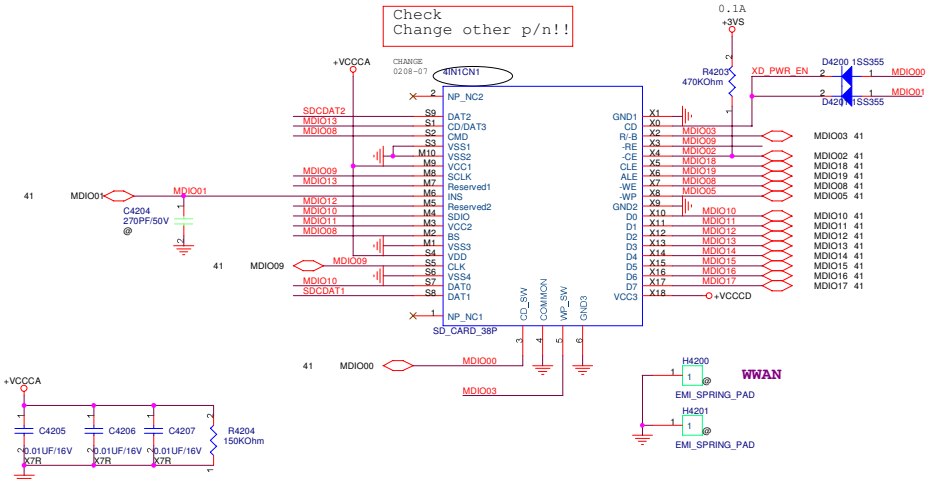

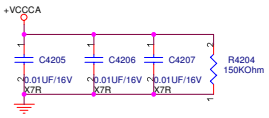

ASUS	Title :	CardReader	
ASUSTeK COMPUTER INC	Engineer:	Allen_CD Wu	
Size: Custom	Project Name: A8N_A8Dc		Rev: 1.0
Date: 星期四, 二月 01, 2007	Sheet 42 of 94		

<< Kennedy_Zhang >>

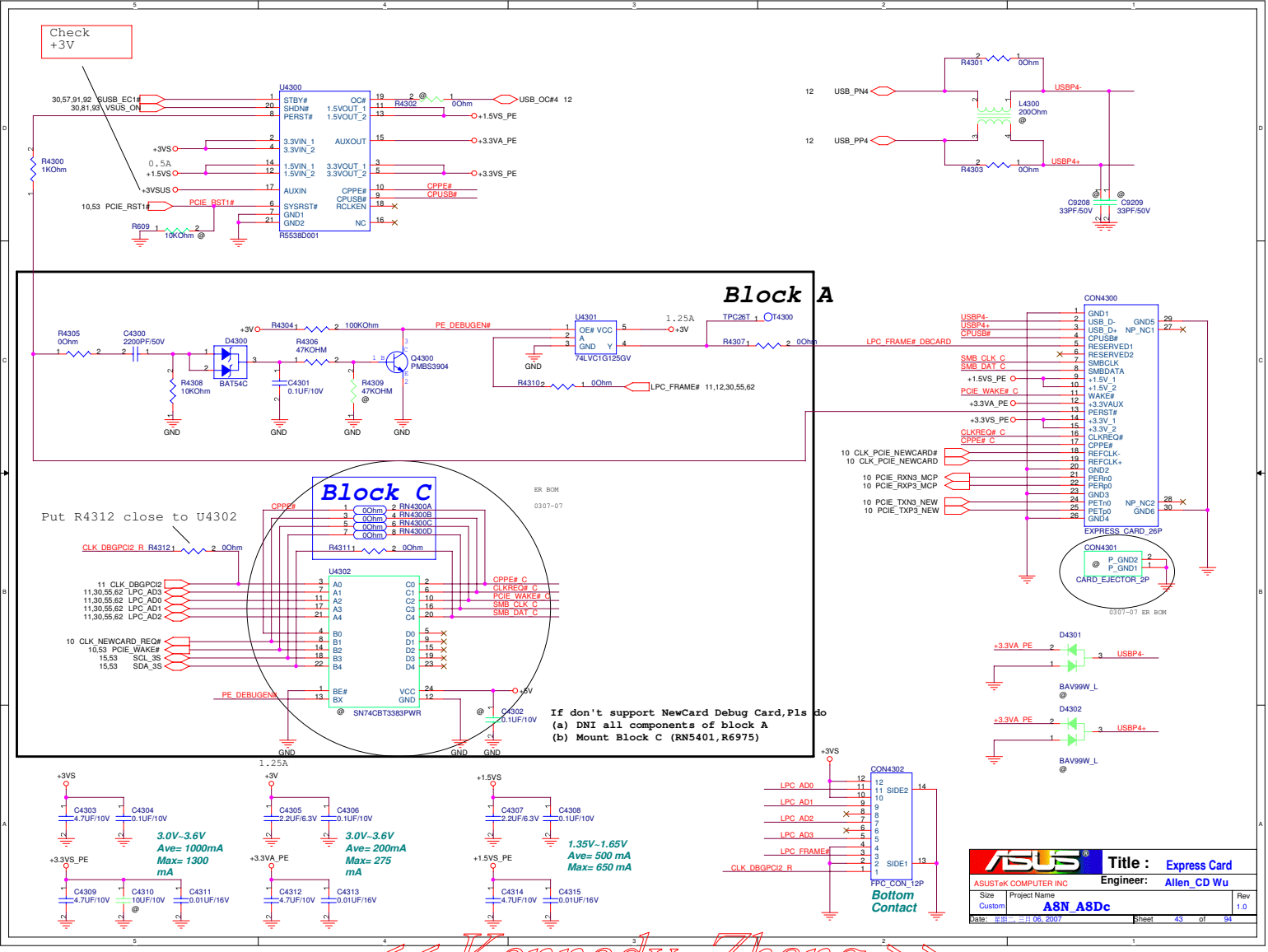

<< Kennedy_Zhang >>

ASUSTeK COMPUTER INC	Title : Blank	
	Engineer:	
Size: A	Project Name: A8N_A8Dc	Rev: 1.0
Date: 星期四, 三月 01, 2007	Sheet 44 of 94	

<< Kennedy_Zhang >>

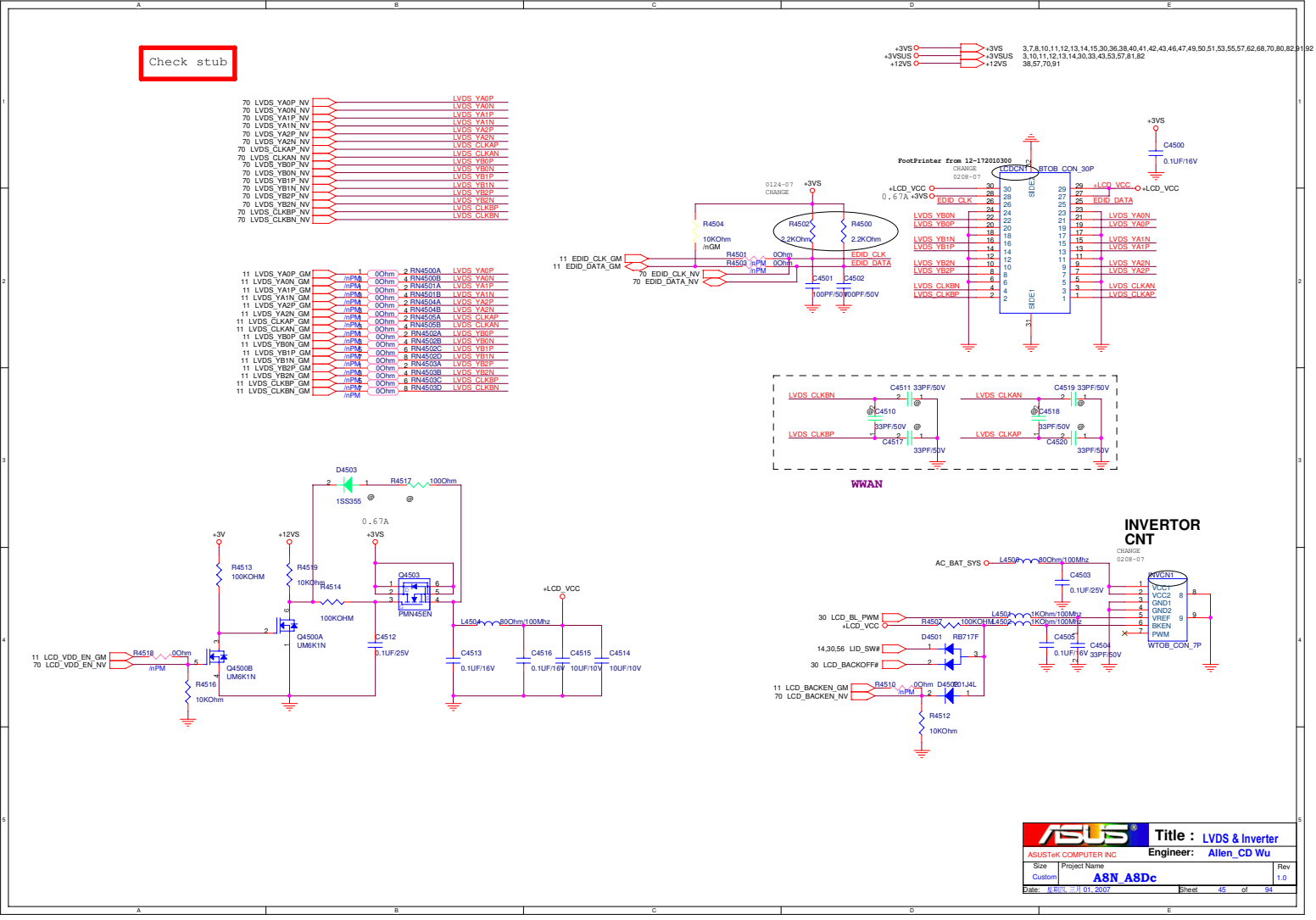

<< Kennedy_Zhang >>

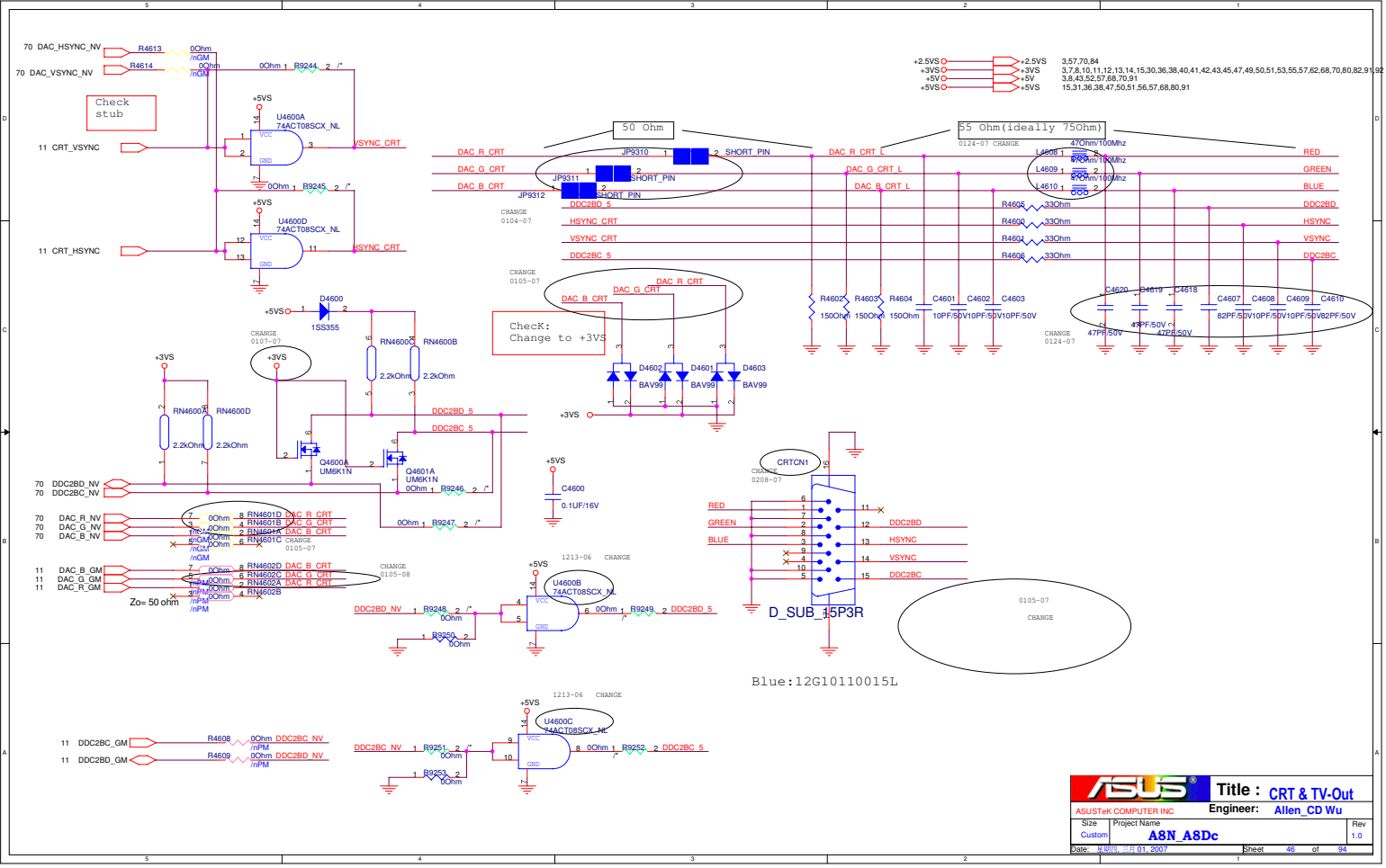

ASUSTeK COMPUTER INC

Title : CRT & TV-Out

Engineer: Allen_CD Wu

Size	Project Name	Rev
Custom	A8N_A8Dc	1.0

Date: 星期四, 三月 01, 2007 Sheet 46 of 94

<< Kennedy_Zhang >>

Add DVI Choke 09G092145000 for EMI

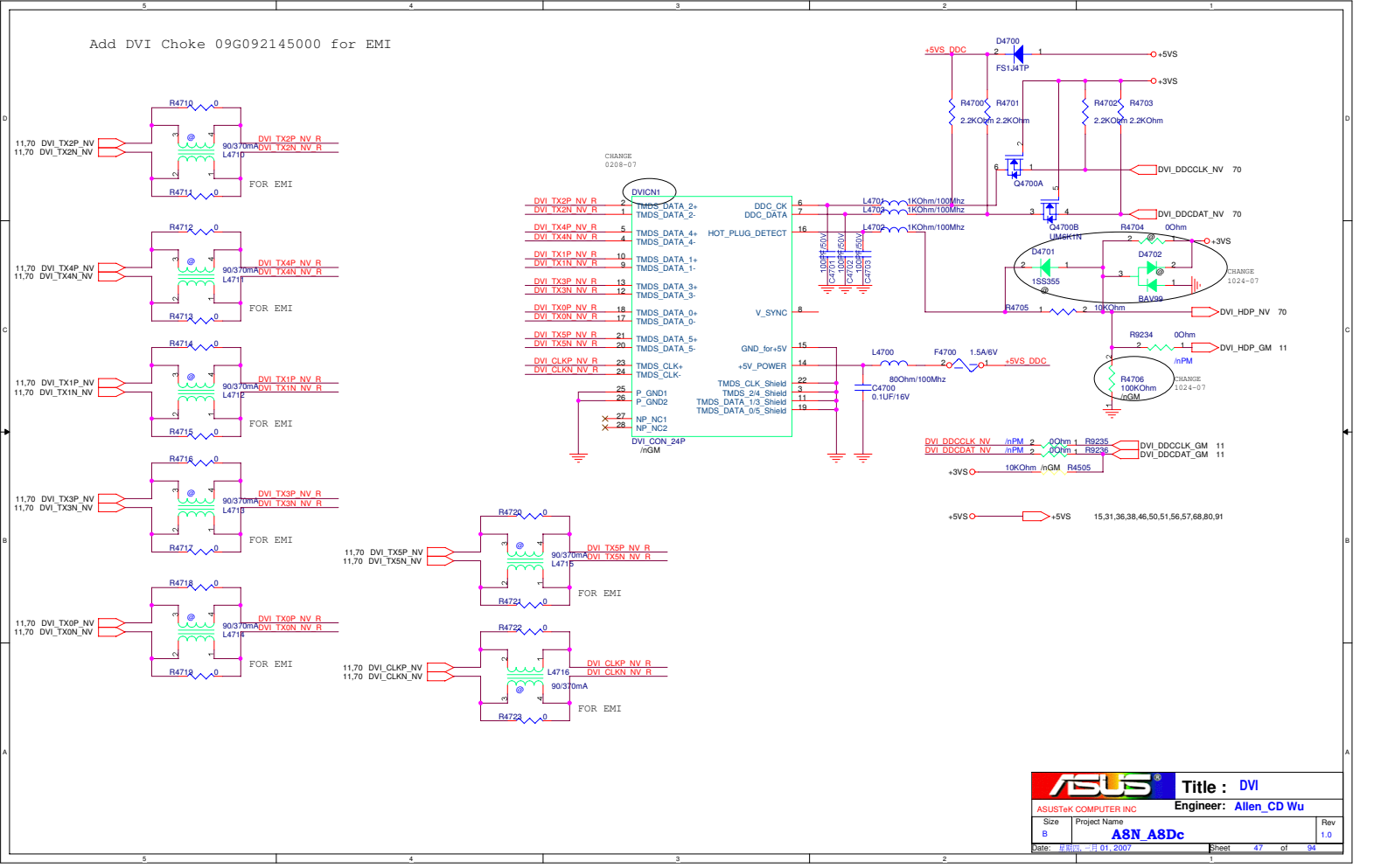

ASUSTeK COMPUTER INC	Title : DVI	
	Engineer: Allen_CD Wu	
Size B	Project Name A8N_A8Dc	Rev 1.0
Date: 星期四, 一月 01, 2007	Sheet 47 of 94	

<< Kennedy_Zhang >>

ASUSTeK COMPUTER INC	Title : BLANK Engineer:	
Size A	Project Name A8N_A8Dc	Rev 0
Date: 星期四, 三月 01, 2007	Sheet 48 of 94	

<< Kennedy_Zhang >>

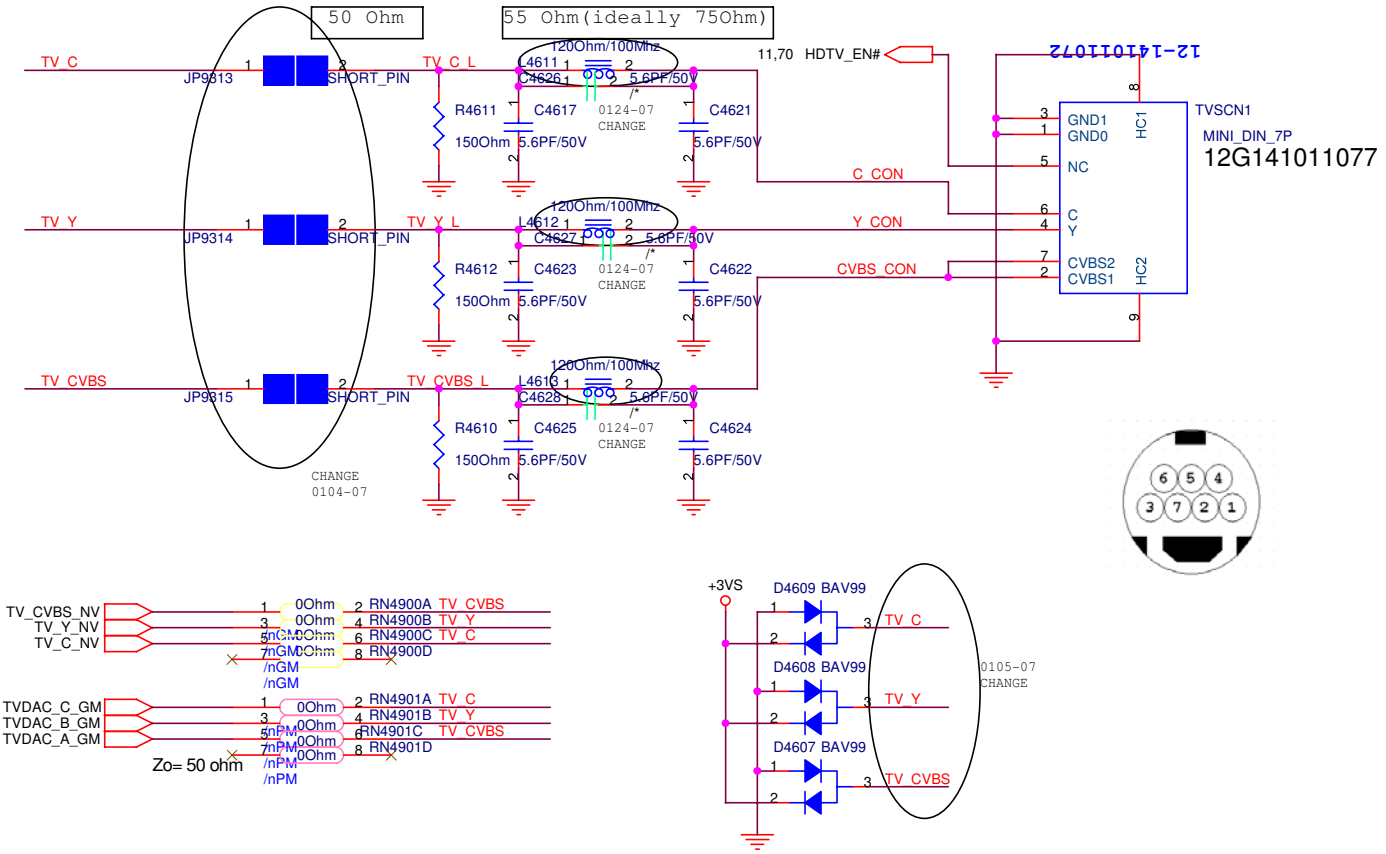

ASUSTeK COMPUTER INC	Title : TV	
	Engineer: Allen_CD Wu	
Size A	Project Name A8N_A8Dc	Rev 1.0
Date: 星期四, 三月 01, 2007	Sheet 49 of 94	

<< Kennedy_Zhang >>

FAN & THERMAL CONTROLLER

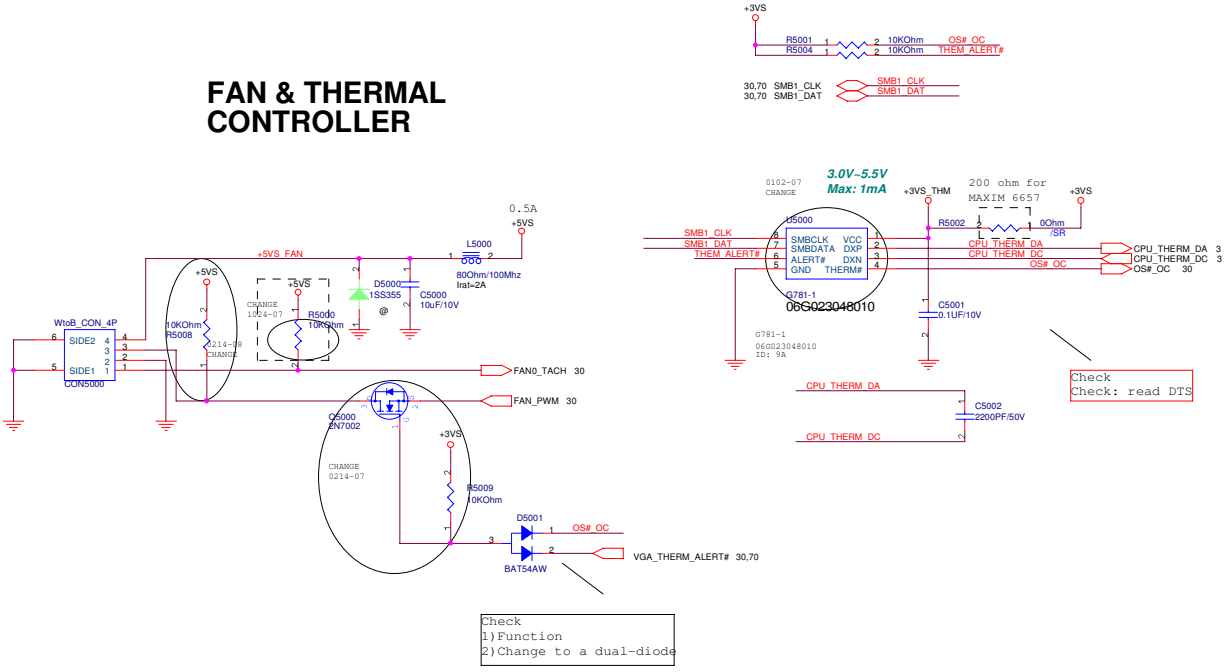

ASUSTeK COMPUTER INC	Title : FAN & THERMAL	Engineer: Allen_CD Wu
Size B	Project Name A8N_A8Dc	Rev 1.0
Date: 星期四, 一月 01, 2007	Sheet 50 of 94	

<< Kennedy_Zhang >>

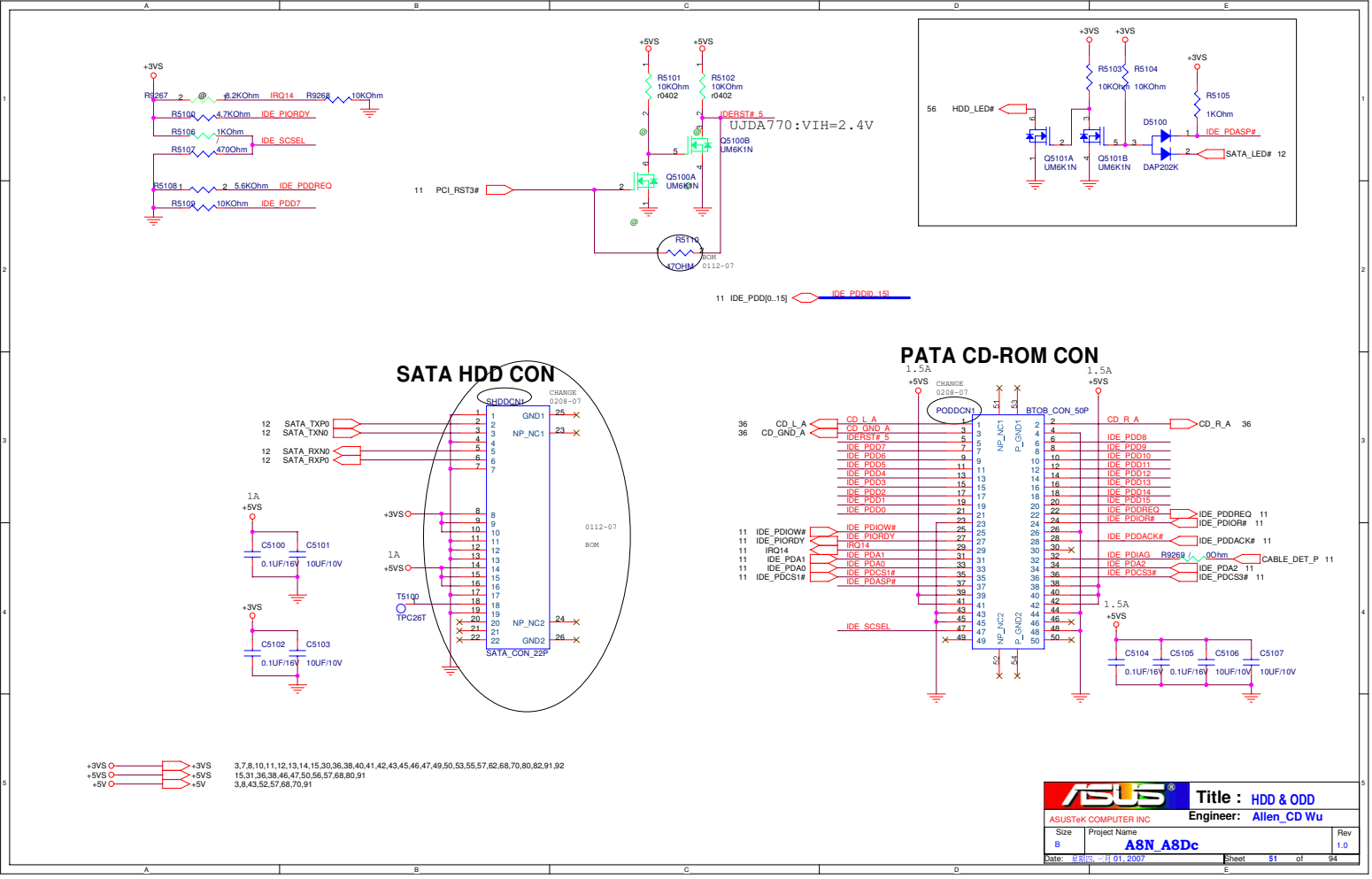

<< Kennedy_Zhang >>

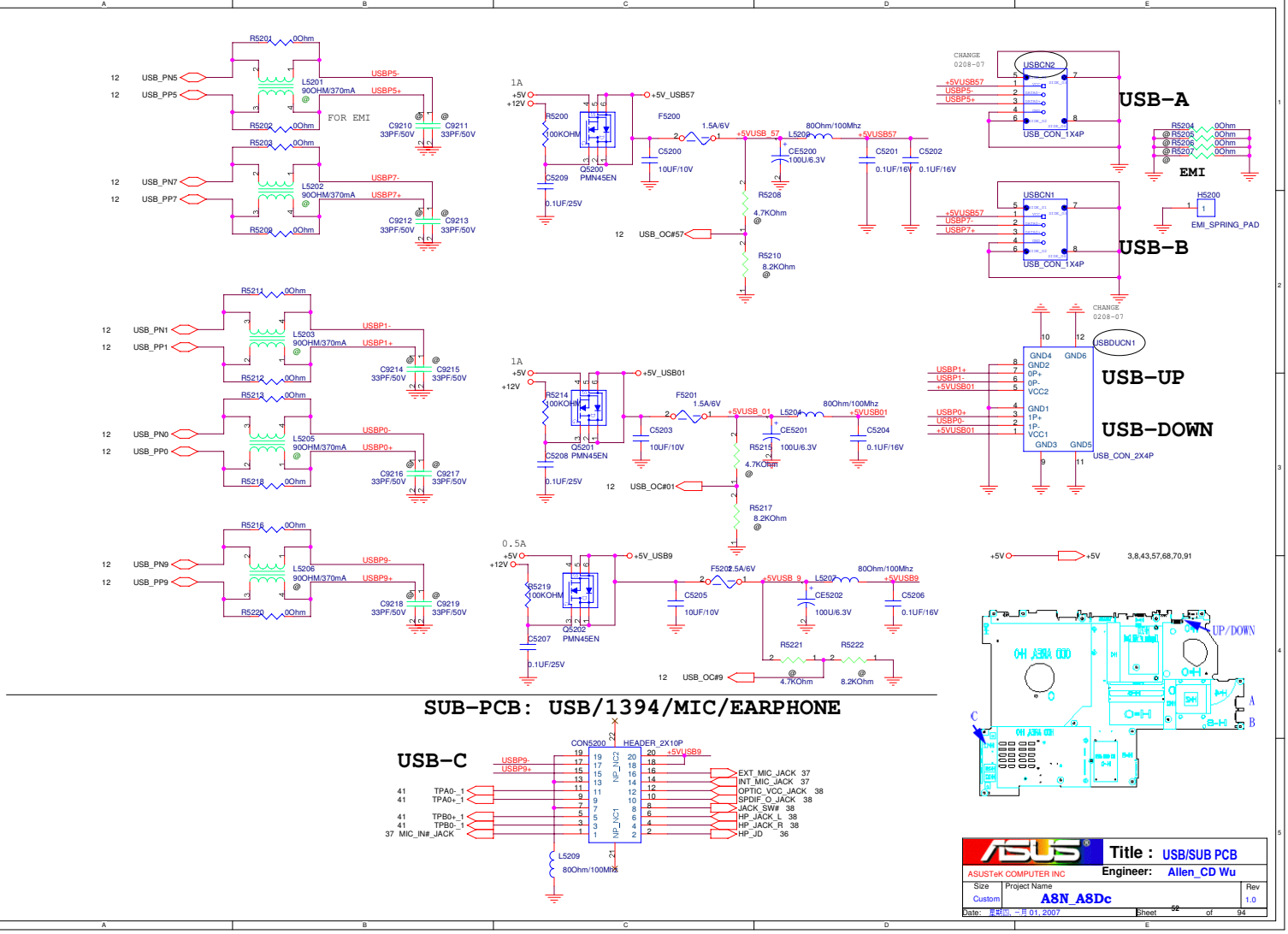

SUB-PCB: USB/1394/MIC/EARPHONE

ASUS	Title : USB/SUB PCB		
ASUSTeK COMPUTER INC	Engineer: Allen_CD Wu		
Size: Custom	Project Name: A8N_A8Dc		Rev: 1.0
Date: 星期四, 一月 01, 2007	Sheet 52 of 94		

<< Kennedy_Zhang >>

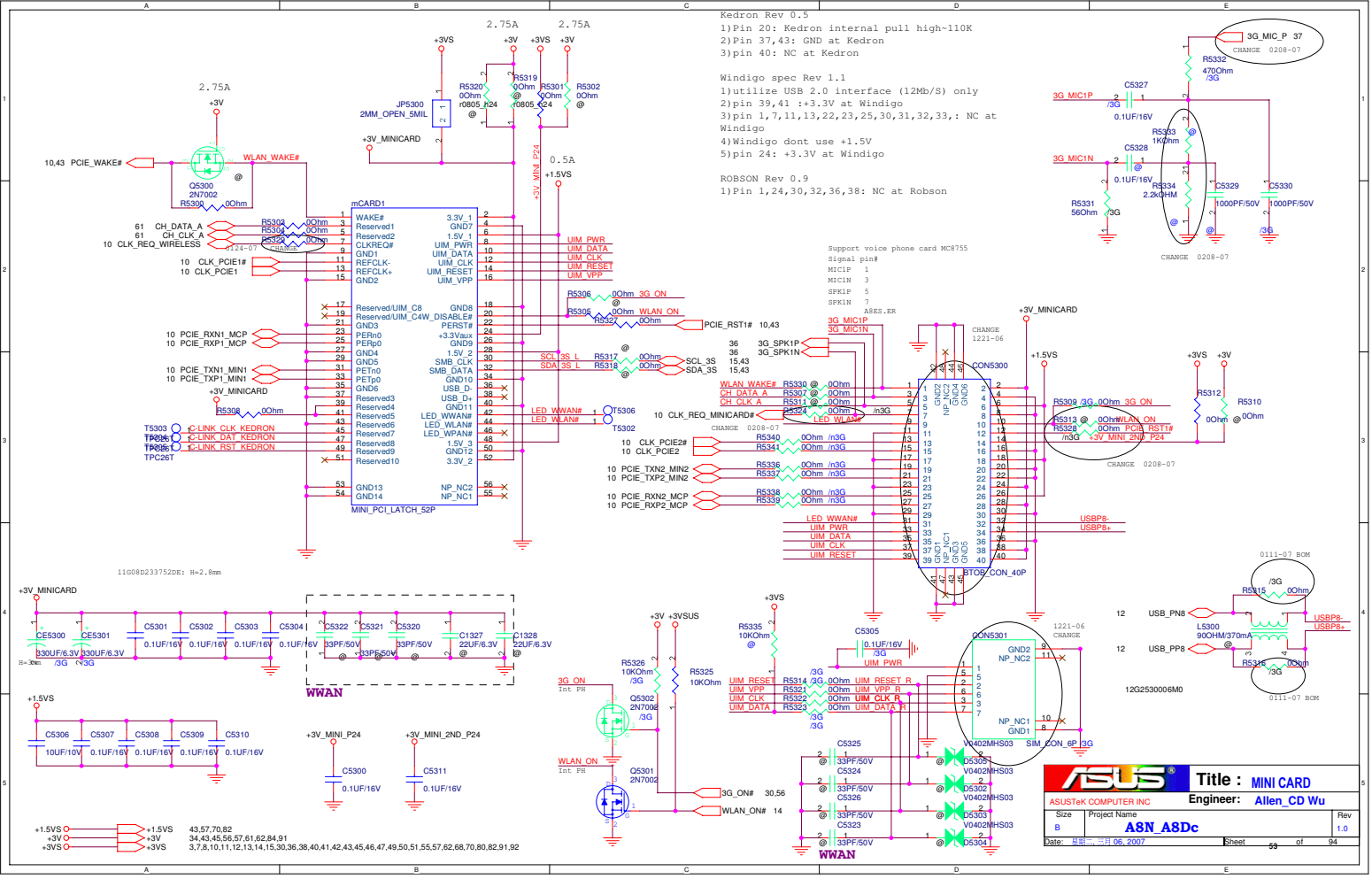

<< Kennedy_Zhang >>

ASUSTeK COMPUTER INC.	Title : BLANK Engineer:	
Size Custom	Project Name A8N_A8Dc	Rev 0
Date: 星期四, 二月 01, 2007	Sheet 54 of 94	

<< Kennedy_Zhang >>

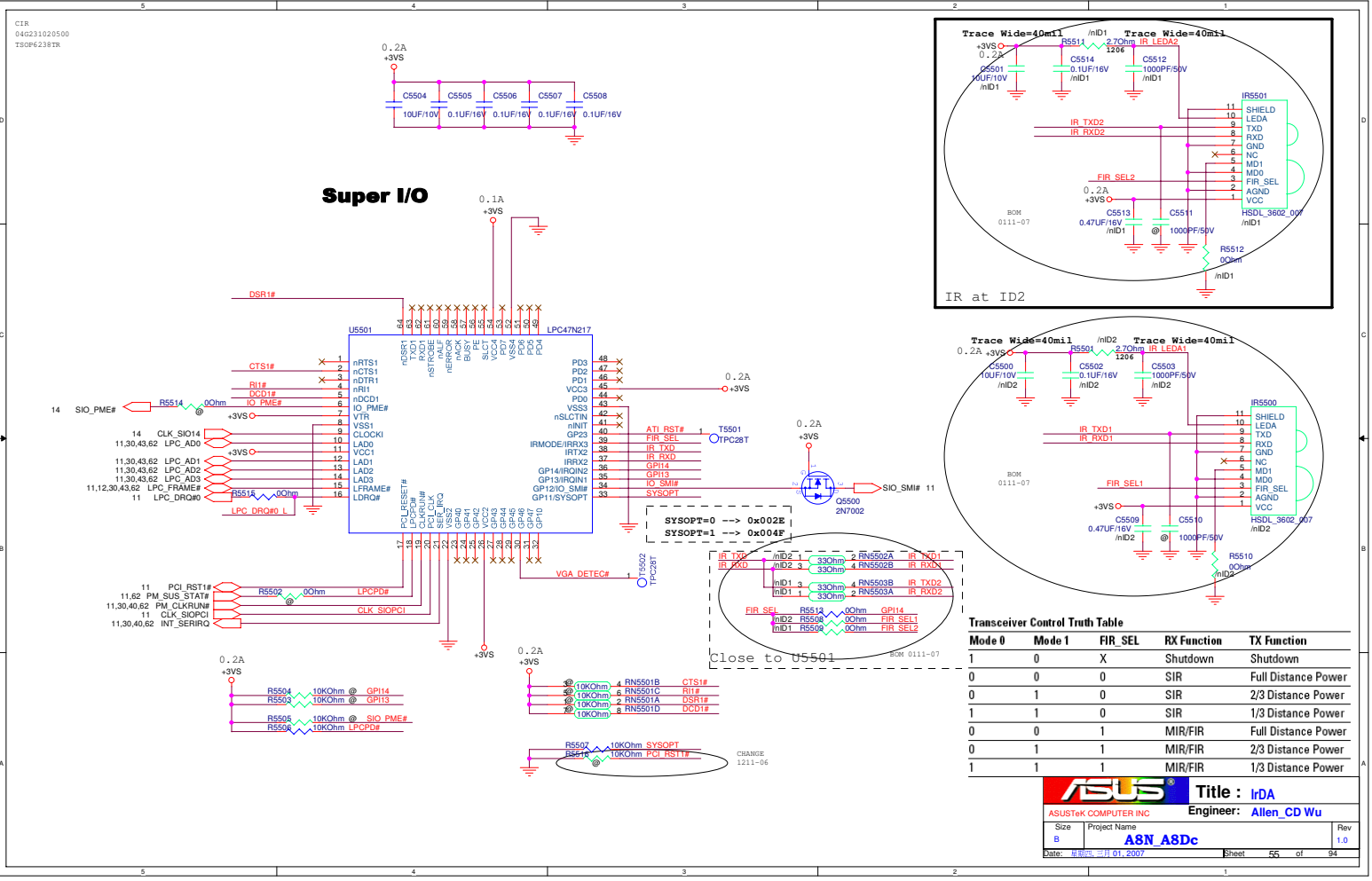

Transceiver Control Truth Table

Mode 0	Mode 1	FIR_SEL	RX Function	TX Function
1	0	X	Shutdown	Shutdown
0	0	0	SIR	Full Distance Power
0	1	0	SIR	2/3 Distance Power
1	1	0	SIR	1/3 Distance Power
0	0	1	MIR/FIR	Full Distance Power
0	1	1	MIR/FIR	2/3 Distance Power
1	1	1	MIR/FIR	1/3 Distance Power

ASUSTeK COMPUTER INC

Title : IrDA

Engineer: Allen_CD Wu

Size	Project Name	Rev
B	A8N_A8Dc	1.0

Date: 星期四, 三月 01, 2007 Sheet 55 of 94

<< Kennedy_Zhang >>

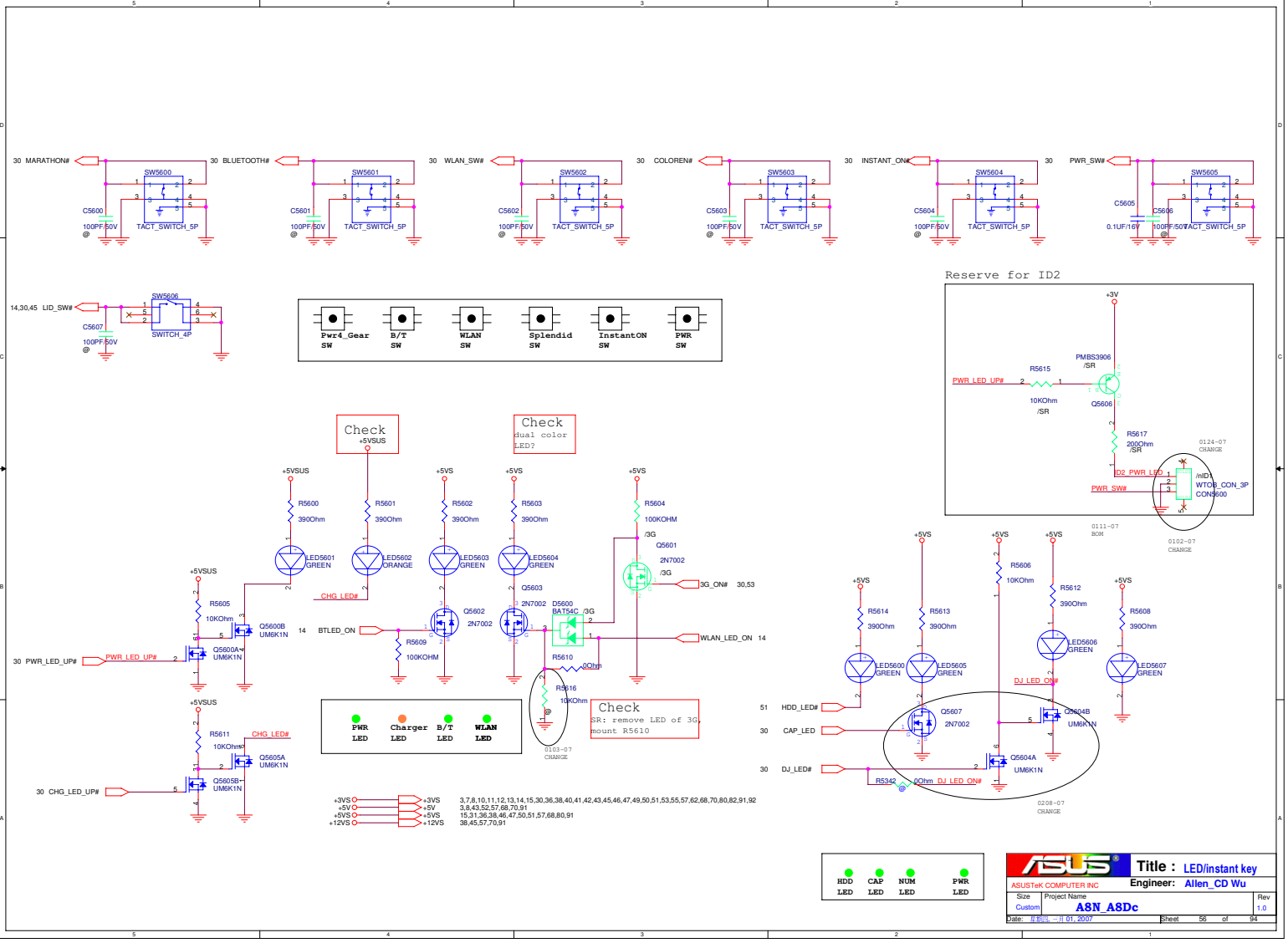

<< Kennedy_Zhang >>

Discharge Circuit

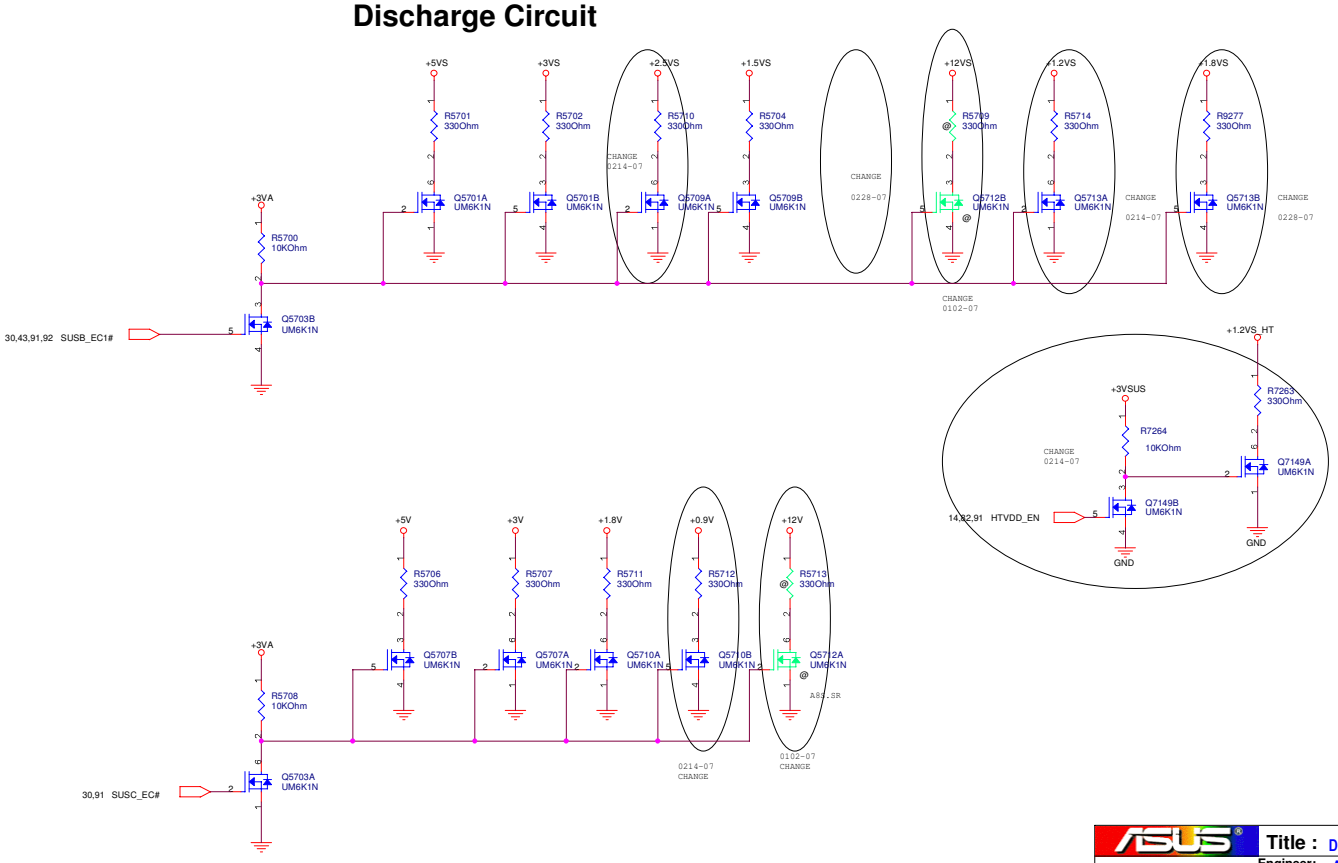

ASUSTeK COMPUTER INC	Title : Discharge	Engineer: Allen_CD Wu
Size B	Project Name A8N_A8Dc	Rev 1.0
Date: 星期四, 一月 01, 2007	Sheet 57 of 94	

<< Kennedy_Zhang >>

<Variant Name>

ASUSTeK COMPUTER INC	Title :	
	Engineer:	
Size: A	Project Name: A8N_A8Dc	Rev: 1.0
Date: 星期四, 三月 01, 2007	Sheet of 94	

<< Kennedy_Zhang >>

Title	<Title>	
Size A	Document Number A8N_A8Dc	Rev 1.1
Date: 星期四, 三月 01, 2007	Sheet 59 of 94	

<< Kennedy_Zhang >>

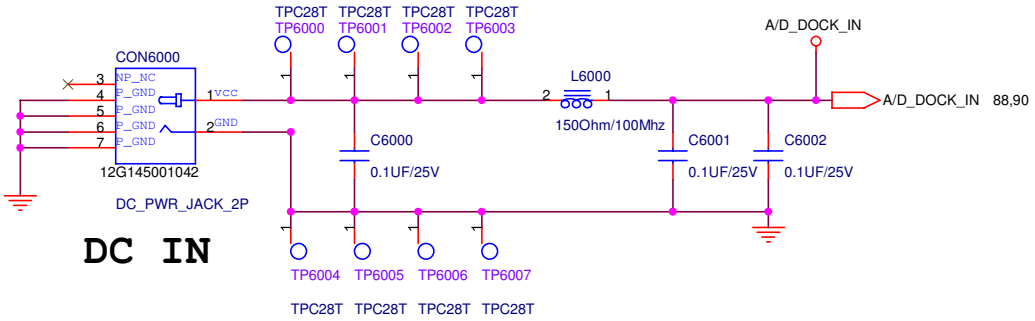

DC IN

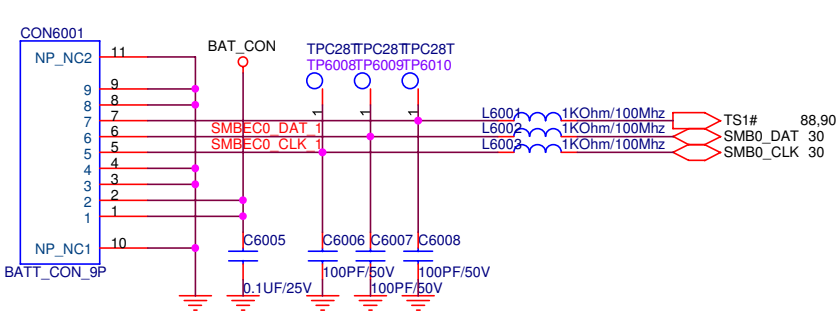

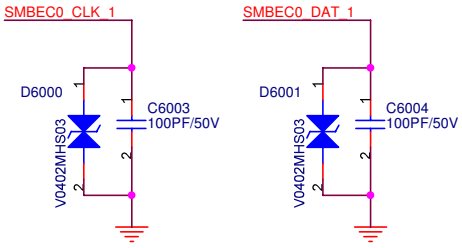

Battery Connector

ASUS	Title : DC IN / BAT	
ASUSTeK COMPUTER INC	Engineer: Allen_CD Wu	
Size A	Project Name A8N_A8Dc	Rev 1.0
Date: 星期四, 三月 01, 2007	Sheet 60 of 94	

<< Kennedy_Zhang >>

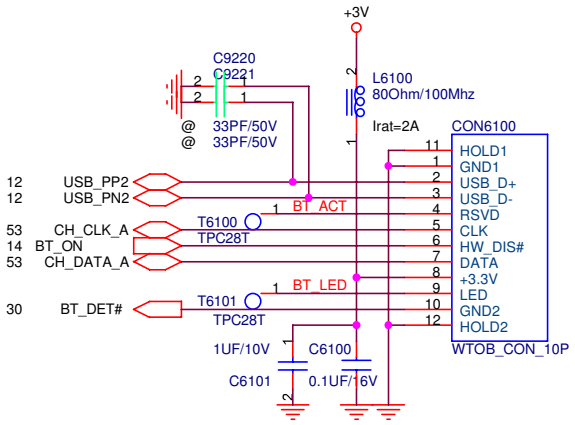

Bluetooth Module CON

ASUSTeK COMPUTER INC	Title : BT/CAMERA	
	Engineer: Allen_CD Wu	
Size A	Project Name A8N_A8Dc	Rev 1.0
Date: 星期四, 三月 01, 2007	Sheet 61 of 94	

<< Kennedy_Zhang >>

TPM 1.2 Module

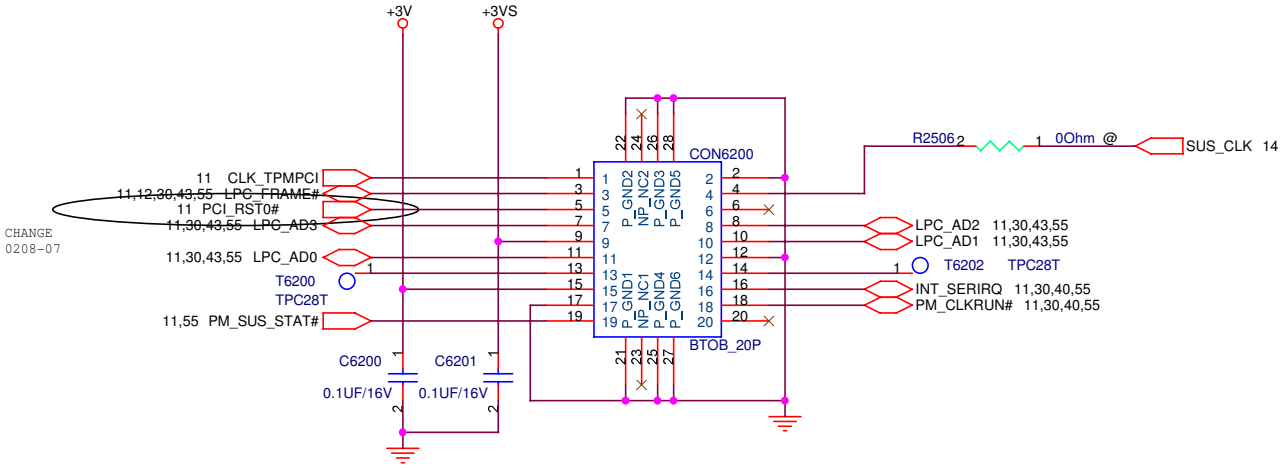

ASUSTeK COMPUTER INC	Title : TPM	
	Engineer: Allen_CD Wu	
Size: A	Project Name: A8N_A8Dc	Rev: 1.0
Date: 星期四, 三月 01, 2007	Sheet 62 of 94	

<< Kennedy_Zhang >>

ASUSTeK COMPUTER INC	Title : BLANK Engineer:	
Size A	Project Name **A8N_A8Dc**	Rev 0
Date: 星期四, 三月 01, 2007	Sheet 63 of 94	

<< Kennedy_Zhang >>

PCI Device	IDSEL#	REQ/GNT#	Interrupts
CARDBUS	AD22	1	Y, Z
	CHANGE 1215-06		

SM-Bus Device	SM-Bus Address
SO-DIMM 0 (low)	
SPD	A0
SO-DIMM 1(high)	
SPD	A4
G781-1	9A
G781(VGA board)	98

CHANGE
0102-07

Thermal Sensor (CPU)

SM-Bus Mapping 1001100

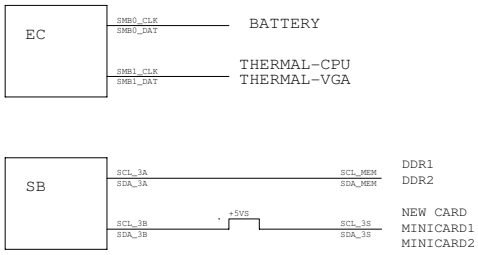

BOM option

nGM:yellow
nPM:light red
==========
nGM :no stuff for A8N
nPM :no stuff for A8Dc
nGM1:no stuff for A8N, A8N/SR mount for debuging A8S in advance
3G :for Windigo, SR mount for debuging
SR :for SR debuging, should be removed or no stuff @ ER

Support ID2:

Support ID2:
page 68,Finger print
page 55,IR
Page 56,pwr switch and LED

Thermal block diagram

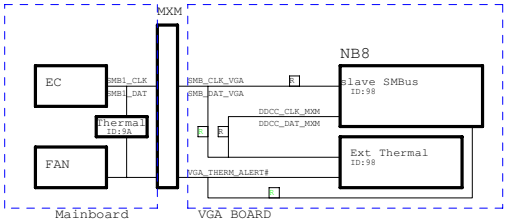

ASUSTeK COMPUTER INC

Title :

Engineer: Allen_CD Wu

Size	Project Name	Rev
B	A8N_A8Dc	1.0

Date: 星期四, 一月 01, 2007 Sheet 64 of 94

<< Kennedy_Zhang >>

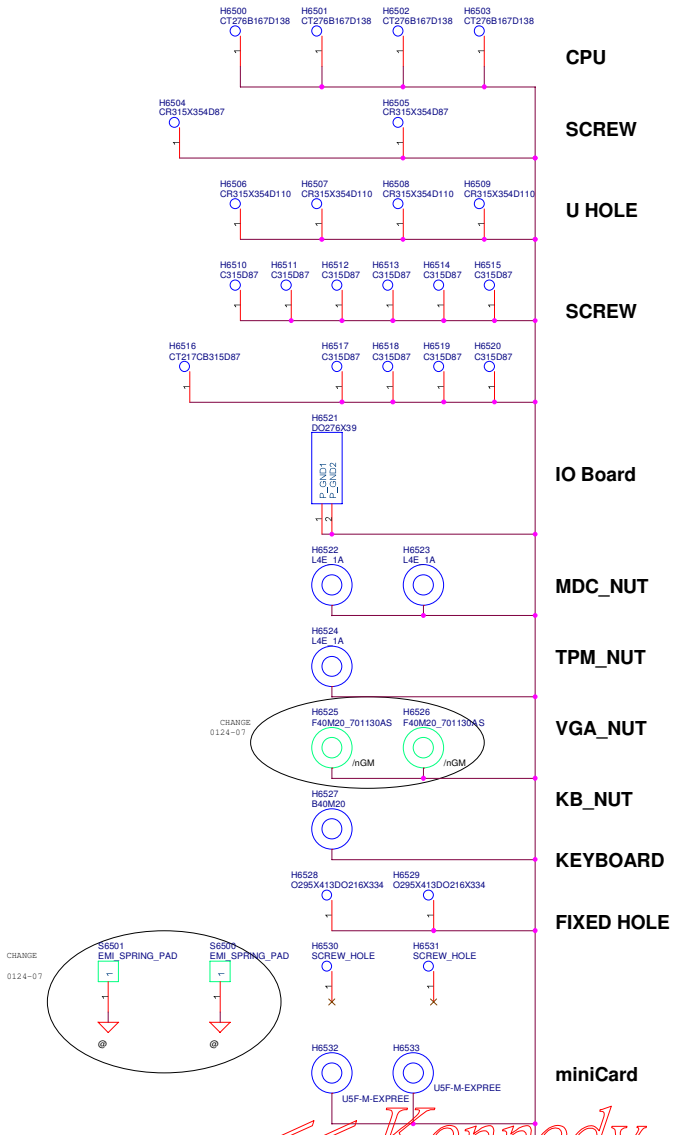

<< Kennedy_Zhang >>

Title	<Title>		
Size	Document Number		Rev
	CustomA8N_A8Dc		1.1
Date:	星期四, 一月 01, 2007	Sheet 65 of 94	

ASUSTeK COMPUTER INC	Title : BLANK	
	Engineer: Allen_CD Wu	
Size B	Project Name A8N_A8Dc	Rev 0
Date: 星期四, 一月 01, 2007	Sheet 66 of 94	

<< Kennedy_Zhang >>

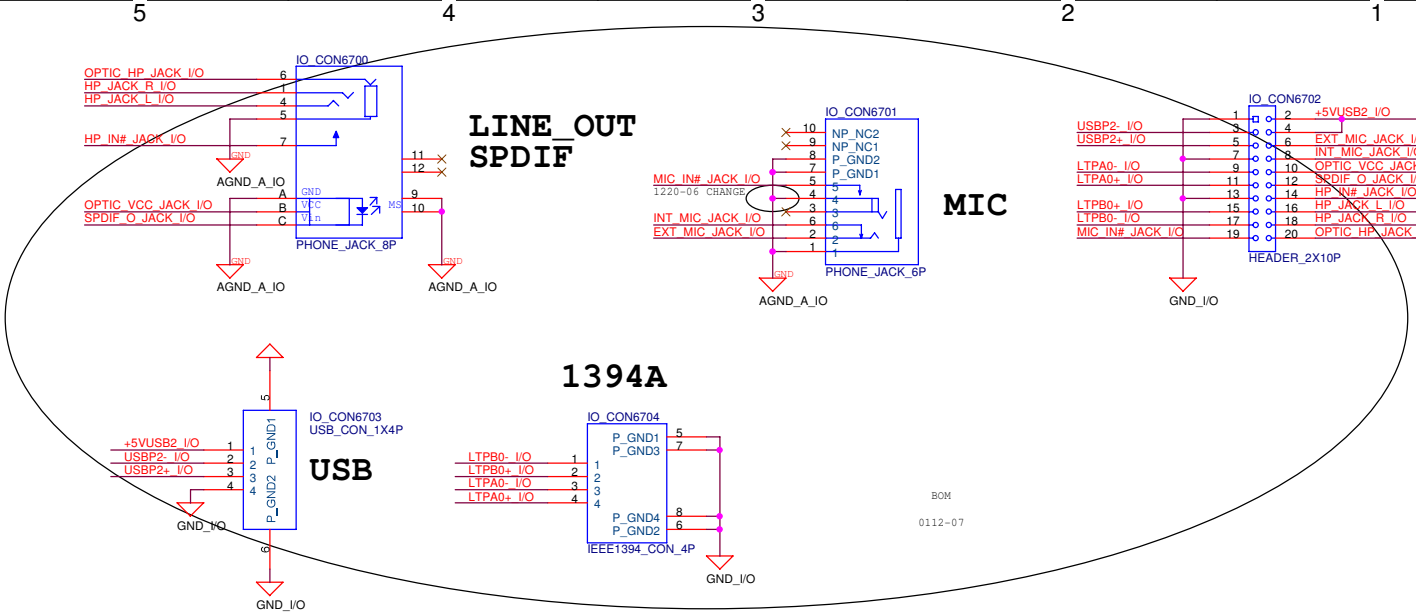

ASUS	Title : SUB_PCB	
ASUSTeK COMPUTER INC	Engineer: Allen_CD Wu	
Size A4	Project Name A8N_A8Dc	Rev 1.0
Date: 星期四, 三月 01, 2007	Sheet 67 of 94	

<< Kennedy_Zhang >>

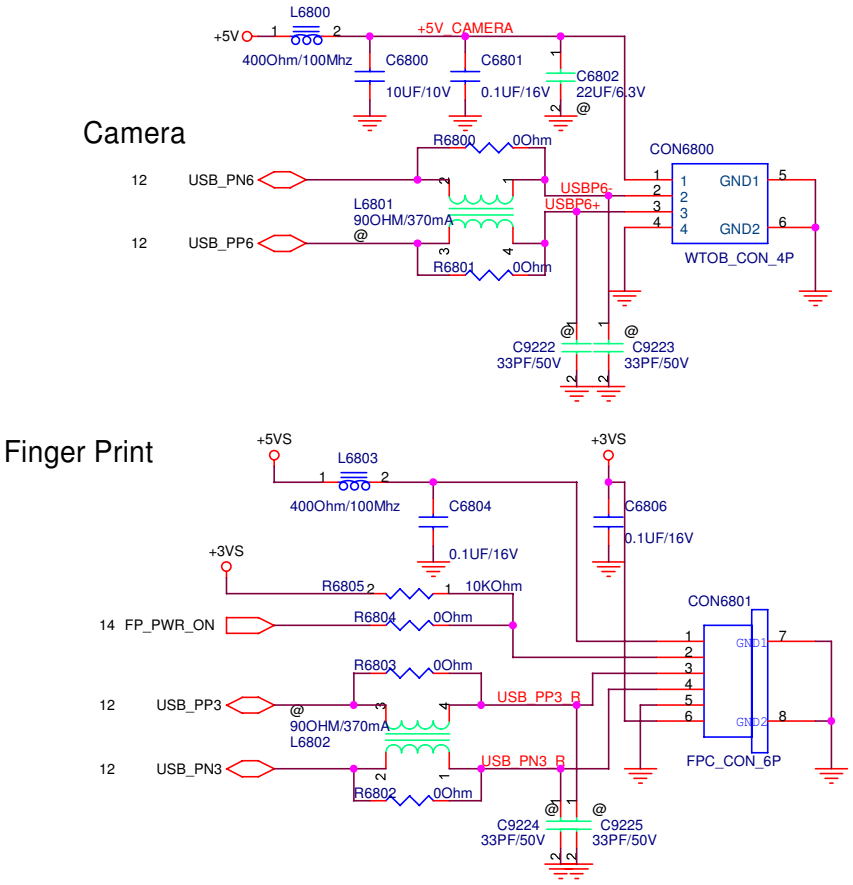

ASUS	Title : CAMERA/FingerPrinter	
ASUSTeK COMPUTER INC	Engineer: Allen_CD Wu	
Size: A	Project Name: A8N_A8Dc	Rev: 1.0
Date: 星期四, 三月 01, 2007	Sheet 68 of 94	

<< Kennedy_Zhang >>

ASUSTeK COMPUTER INC	Title : BLANK Engineer:	
Size A	Project Name A8N_A8Dc	Rev 0
Date: 星期四, 三月 01, 2007	Sheet 69 of 94	

<< Kennedy_Zhang >>

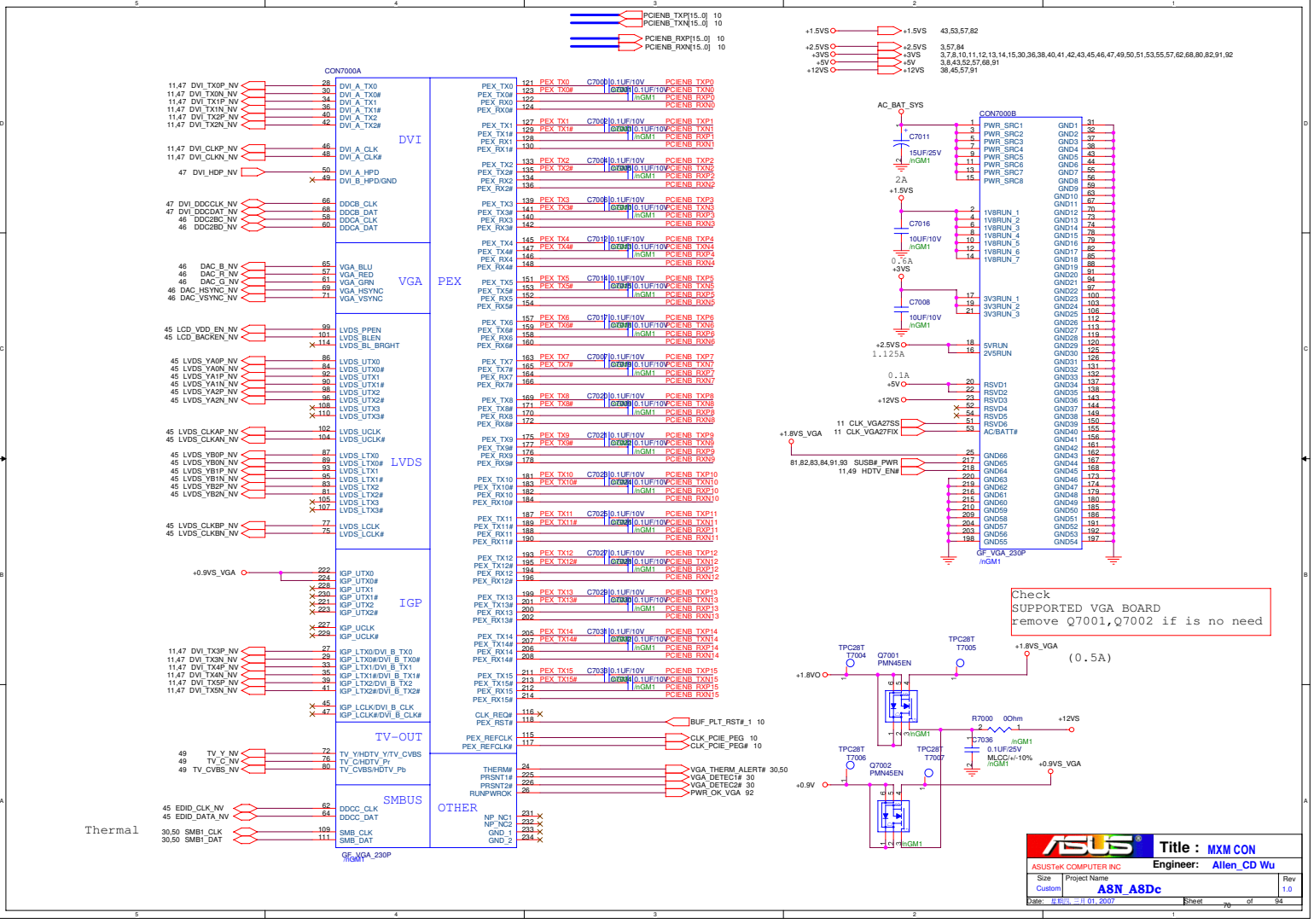

<< Kennedy_Zhang >>

Title	TITLE
Size A3	Document Number ABN_ABDc
Rev 1.0	
Date: 星期四, 一月 01, 2007	Sheet 71 of 94

<< Kennedy_Zhang >>

Title	TITLE			
Size A3	Document Number ABN_ABDc			Rev 1.0
Date: 星期四, 一月 01, 2007		Sheet 72 of 94		

<< Kennedy_Zhang >>

Title	TITLE
Size A3	Document Number ABN_ABDc
Rev 1.0	
Date: 星期四, 一月 01, 2007	Sheet 73 of 94

<< Kennedy_Zhang >>

Title	TITLE
Size A3	Document Number ABN_ABDc
Rev 1.0	
Date: 星期四, 一月 01, 2007	Sheet 74 of 94

<< Kennedy_Zhang >>

Title	TITLE
Size A3	Document Number ABN_ABDc
Rev 1.0	
Date: 星期四, 一月 01, 2007	Sheet 75 of 94

<< Kennedy_Zhang >>

Title	TITLE
Size A3	Document Number ABN_ABDc
Rev 1.0	
Date: 星期四, 一月 01, 2007	Sheet 76 of 94

<< Kennedy_Zhang >>

Title	TITLE
Size A3	Document Number ABN_ABDc
Rev 1.0	
Date: 星期四, 一月 01, 2007	Sheet 77 of 94

<< Kennedy_Zhang >>

ASUSTeK COMPUTER INC	Title : BLANK Engineer:	
Size B	Project Name A8N_A8Dc	Rev 0
Date: 星期四, 一月 01, 2007	Sheet 78 of 94	

<< Kennedy_Zhang >>

Change Note:

EE :

1. Reference name without 0 tail
2. Synchronize component size and type
3. Remove 0 ohm serial resistor
4.
5.
6.
7.
8.

Layout :

1. PCI MOAT
2. Equalize Crystal and PCI Clock Length
3. VGA Board
4. PCI-E Thread

SMT :

1.

ASUS	Title : History	
ASUSTeK COMPUTER INC	Engineer: Allen_CD Wu	
Size: Custom	Project Name: A8N_A8Dc	Rev: 1.0
Date: 星期四, 三月 01, 2007	Sheet 79 of 94	

<< Kennedy_Zhang >>

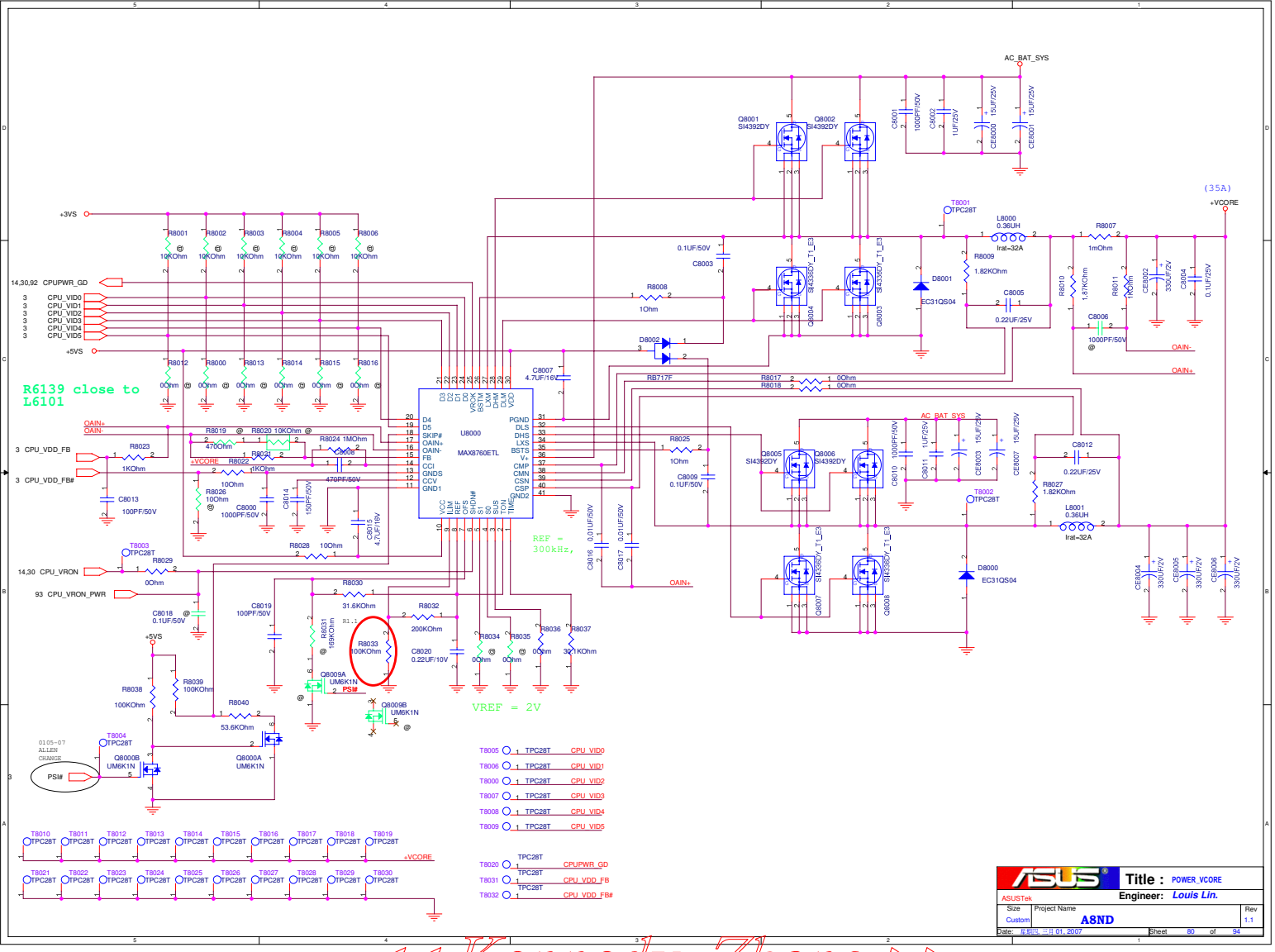

<< Kennedy_Zhang >>

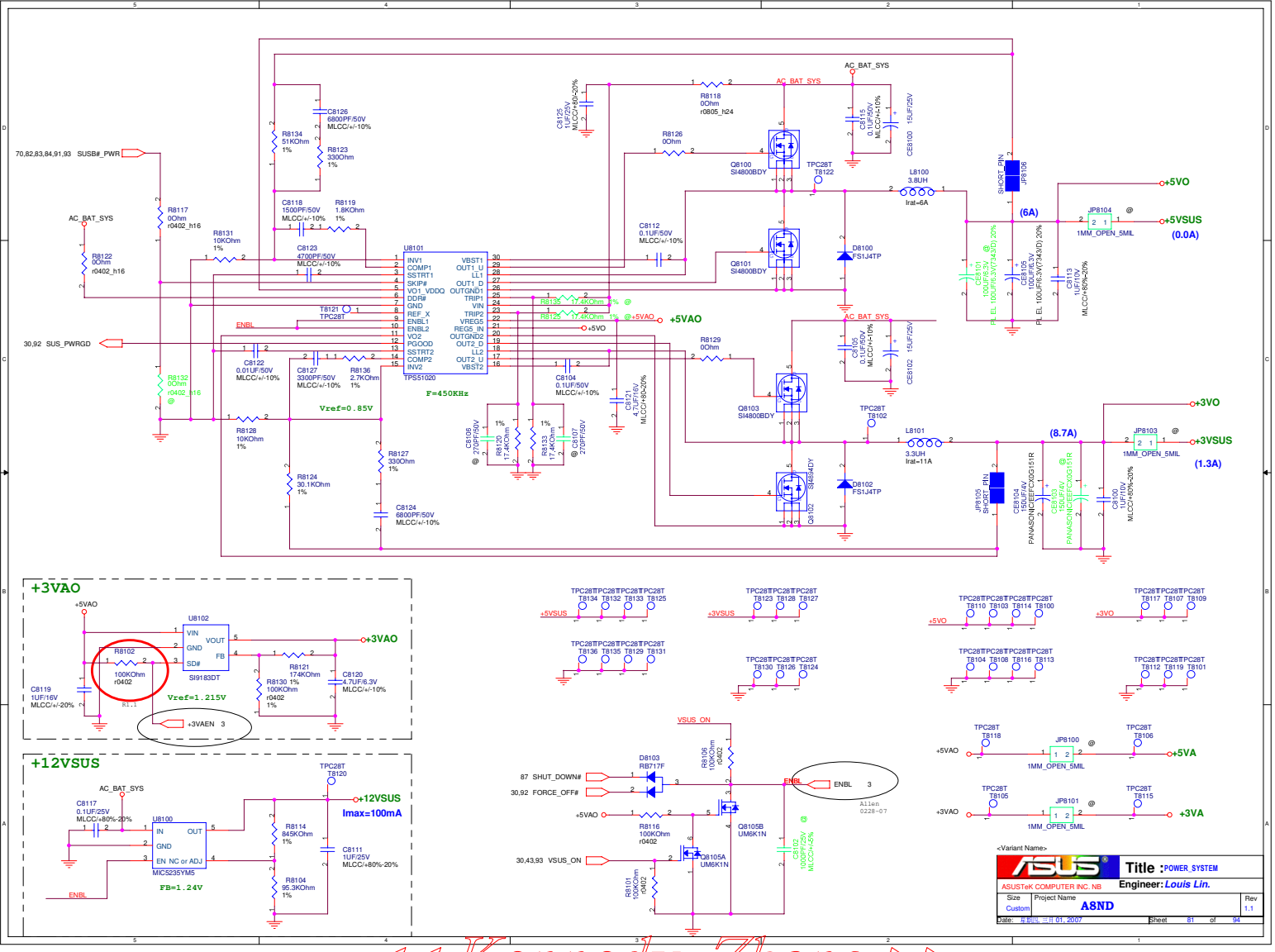

<Variant Name>

ASUS	Title : POWER_SYSTEM	
ASUSTeK COMPUTER INC. NB	Engineer: Louis Lin.	
Size: Custom	Project Name: A8ND	Rev: 1.1
Date: 月 日期, 二月 01, 2007	Sheet 81 of 94	

<< Kennedy_Zhang >>

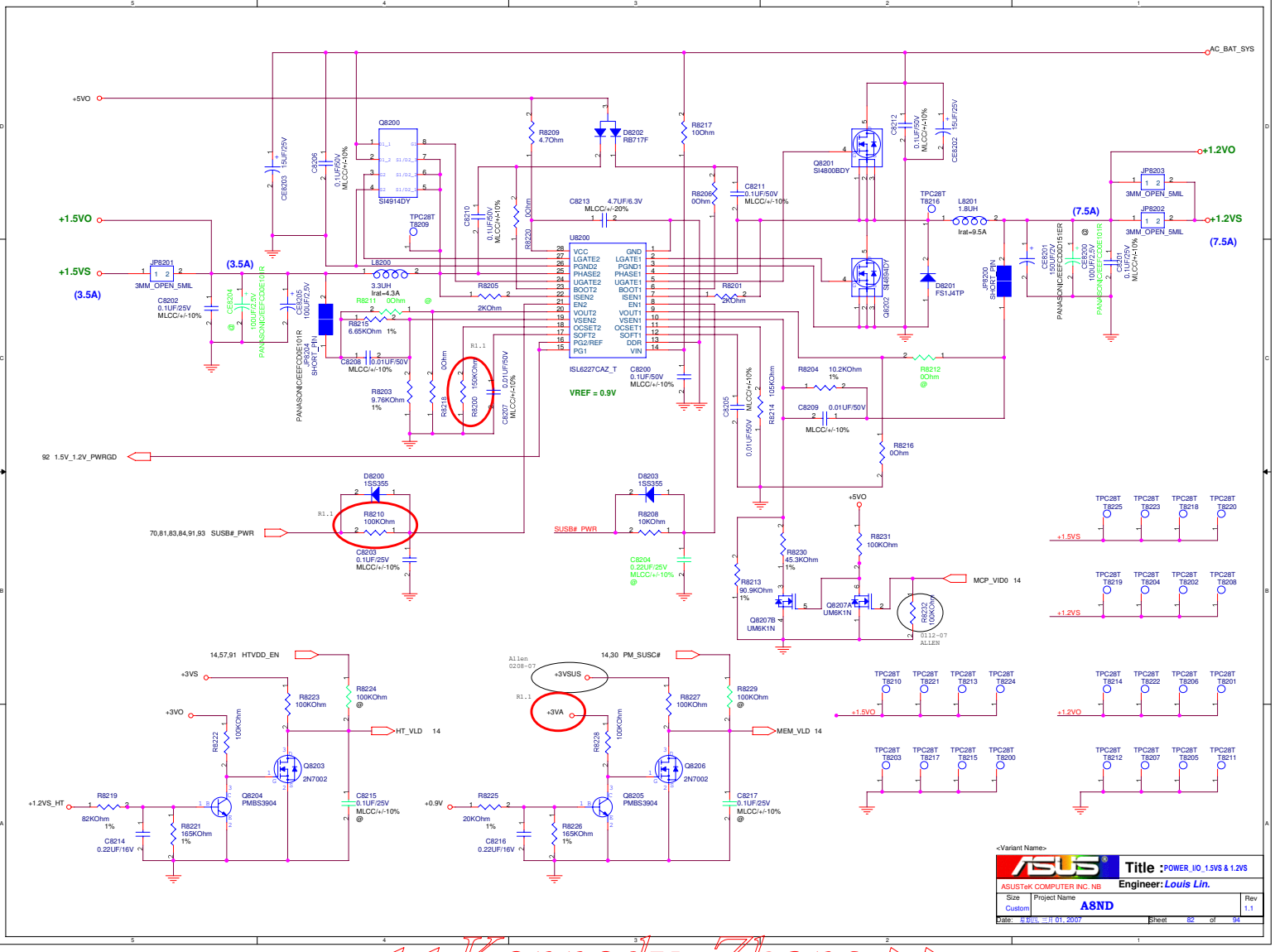
AC_BAT_SYS
+5VO
+1.5VO
+1.5VS
(3.5A)
+1.2VO
+1.2VS
(7.5A)
U8200
ISL6227CAZ_T
VREF = 0.9V
Q8200
SI4914DY
Q8201
SI4800BDY
Q8202
SI4854DY
D8201
FS1J4TP
D8202
RB717F
L8200
3.3UH
Irat=4.3A
L8201
1.8UH
Irat=9.5A
JP8201
3MM_OPEN_5MIL
JP8202
JP8203
92 1.5V_1.2V_PWRGD
70,81,83,84,91,93 SUSB#_PWR
SUSB# PWR
MCP_VID0 14
14,57,91 HTVDD_EN
HT_VLD 14
14,30 PM_SUSC#
MEM_VLD 14
+3VSUS
+3VA
+3VS
+3VO
+1.2VS_HT
+0.9V
Q8203
2N7002
Q8204
PMBS3904
Q8205
PMBS3904
Q8206
2N7002
Q8207A
UM6K1N
Q8207B
UM6K1N
R8232
100KOhm
0112-07
ALLEN
Allen
0208-07
R1.1
R8210
100KOhm
R8200
150KOhm
R8218
0Ohm
R8211
0Ohm
R8212
0Ohm
R8216
0Ohm
R8231
100KOhm
R8230
45.3KOhm
R8213
90.9KOhm
R8204
10.2KOhm
R8209
4.7Ohm
R8217
10Ohm
R8206
0Ohm
R8205
2KOhm
R8201
2KOhm
R8220
0Ohm
R8215
6.65KOhm
R8203
9.76KOhm
R8207
R8214
105KOhm
R8208
10KOhm
R8223
100KOhm
R8224
100KOhm
R8222
100KOhm
R8227
100KOhm
R8229
100KOhm
R8228
100KOhm
R8219
82KOhm
R8221
165KOhm
R8225
20KOhm
R8226
165KOhm
C8213
4.7UF/6.3V
MLCC/+/-20%
C8200
0.1UF/50V
MLCC/+/-10%
C8203
0.1UF/25V
MLCC/+/-10%
C8204
0.22UF/25V
MLCC/+/-10%
C8214
0.22UF/16V
C8215
0.1UF/25V
MLCC/+/-10%
C8217
0.1UF/25V
MLCC/+/-10%
C8216
0.22UF/16V
C8202
15UF/25V
C8212
0.1UF/50V
MLCC/+/-10%
C8211
0.1UF/50V
MLCC/+/-10%
C8210
0.1UF/50V
MLCC/+/-10%
C8206
0.1UF/50V
MLCC/+/-10%
C8209
0.01UF/50V
MLCC/+/-10%
C8205
0.01UF/50V
MLCC/+/-10%
C8208
0.01UF/50V
MLCC/+/-10%
C8207
0.01UF/50V
MLCC/+/-10%
C8203
15UF/25V
C8204
10UF/25V
C8202
100UF/2.5V
C8201
0.1UF/25V
MLCC/+/-10%
C8300
100UF/2.5V
C8202
15UF/25V
C8202
15UF/25V
C8202
15UF/25

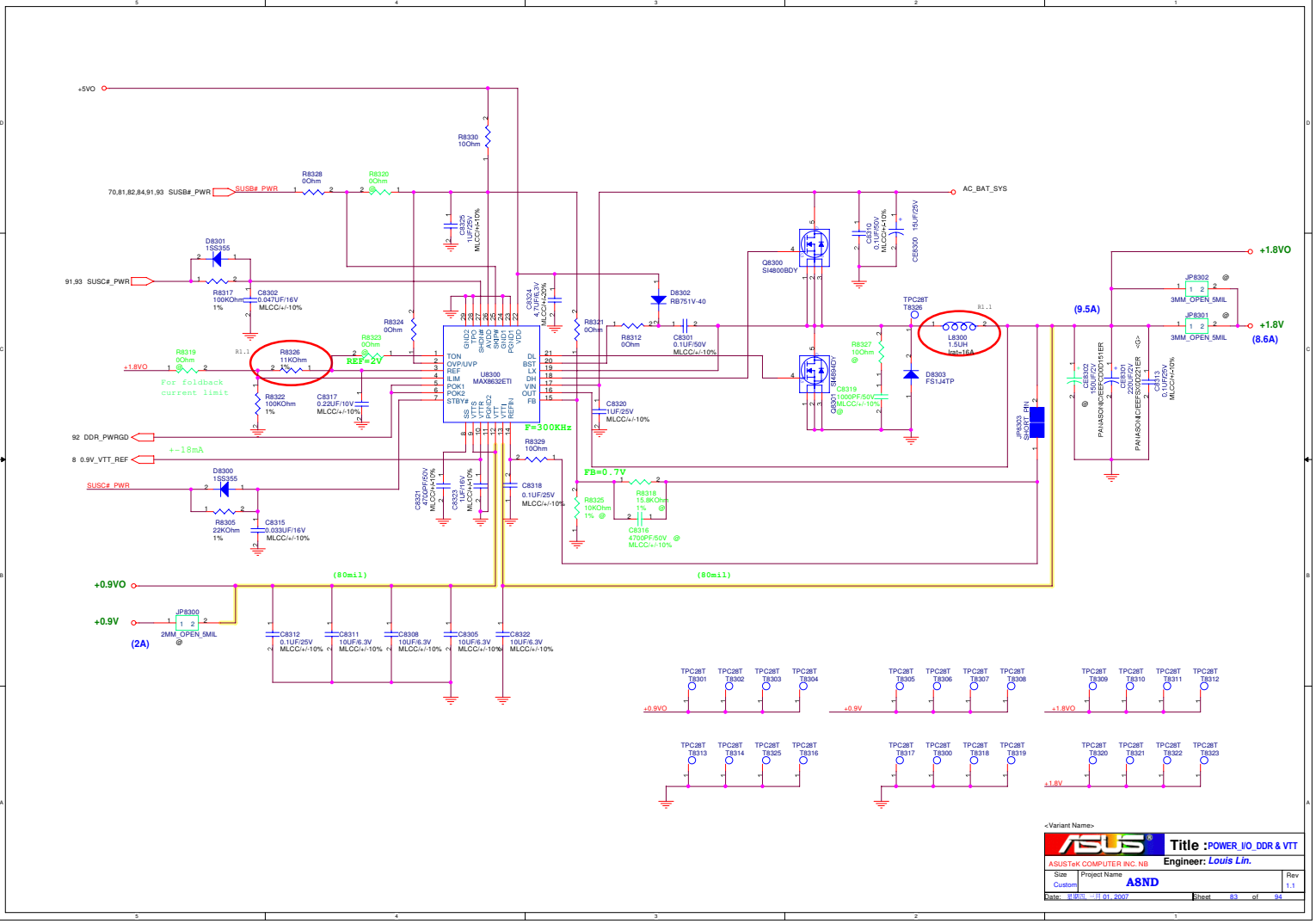

<< Kennedy_Zhang >>

+1.2VSUS

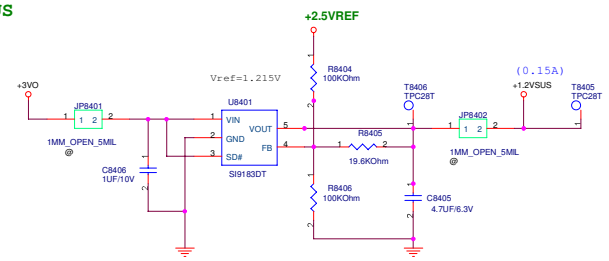

+2.5VS

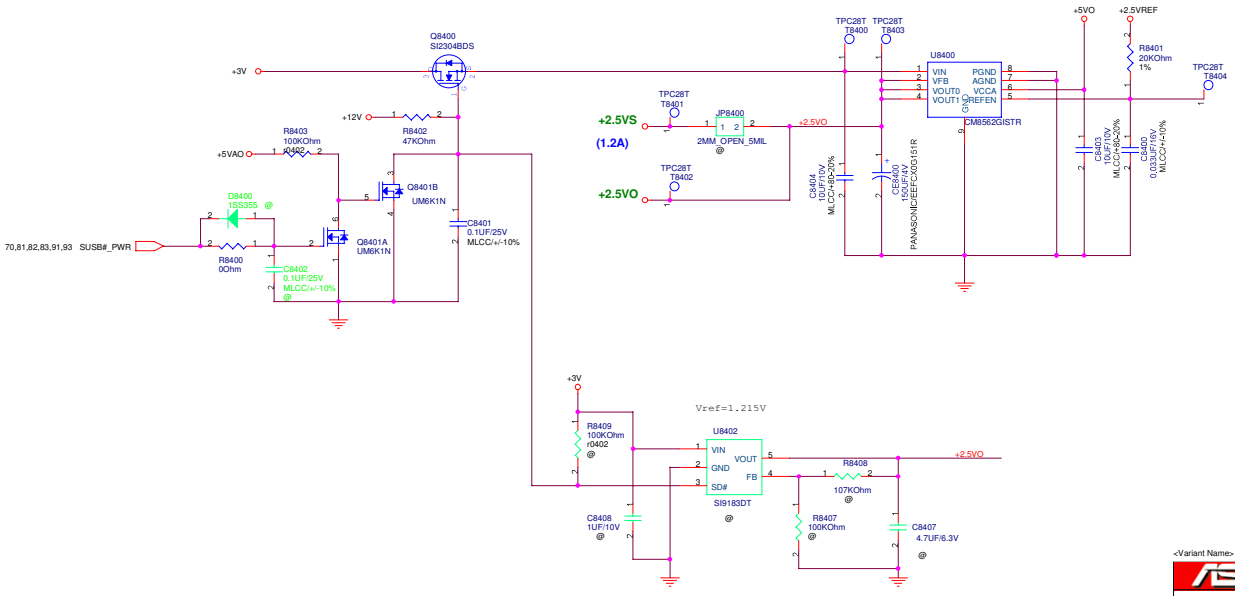

<Variant Name>

ASUS	Title : POWER_I/O_+1.2VSUS & +2.5V	
<OrgName>	Engineer: Louis Lin.	
Size: Custom	Project Name: A8ND	Rev: 1.1
Date: 星期四, 三月 01, 2007	Sheet 84 of 94	

<< Kennedy_Zhang >>

<Variant Name>

ASUS	Title : POWER_VGA_CORE & +1.25VO	
<OrgName>	Engineer: Louis Lin.	
Size: C	Project Name: A8ND	Rev: 1.1
Date: 日期六, 十月 01, 2007	Sheet 85 of 94	

<< Kennedy_Zhang >>

<Variant Name>

ASUS	Title : N/A	
<OrgName>	Engineer:	
Size B	Project Name A8ND	Rev 1.1
Date: 星期四, 一月 01, 2007	Sheet 86 of 94	

<< Kennedy_Zhang >>

PIC only

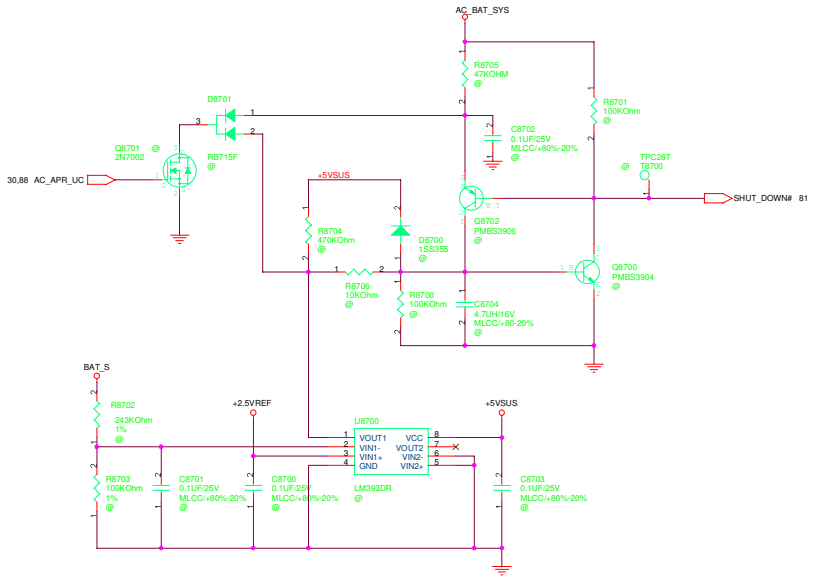

<Variant Name>

ASUS	Title : POWER_SHUTDOWN#	
<OrgName>	Engineer: Louis Lin.	
Size: Custom	Project Name: A8ND	Rev: 1.1
Date: 五四月, 二月 01, 2007	Sheet 87 of 94	

<< Kennedy_Zhang >>

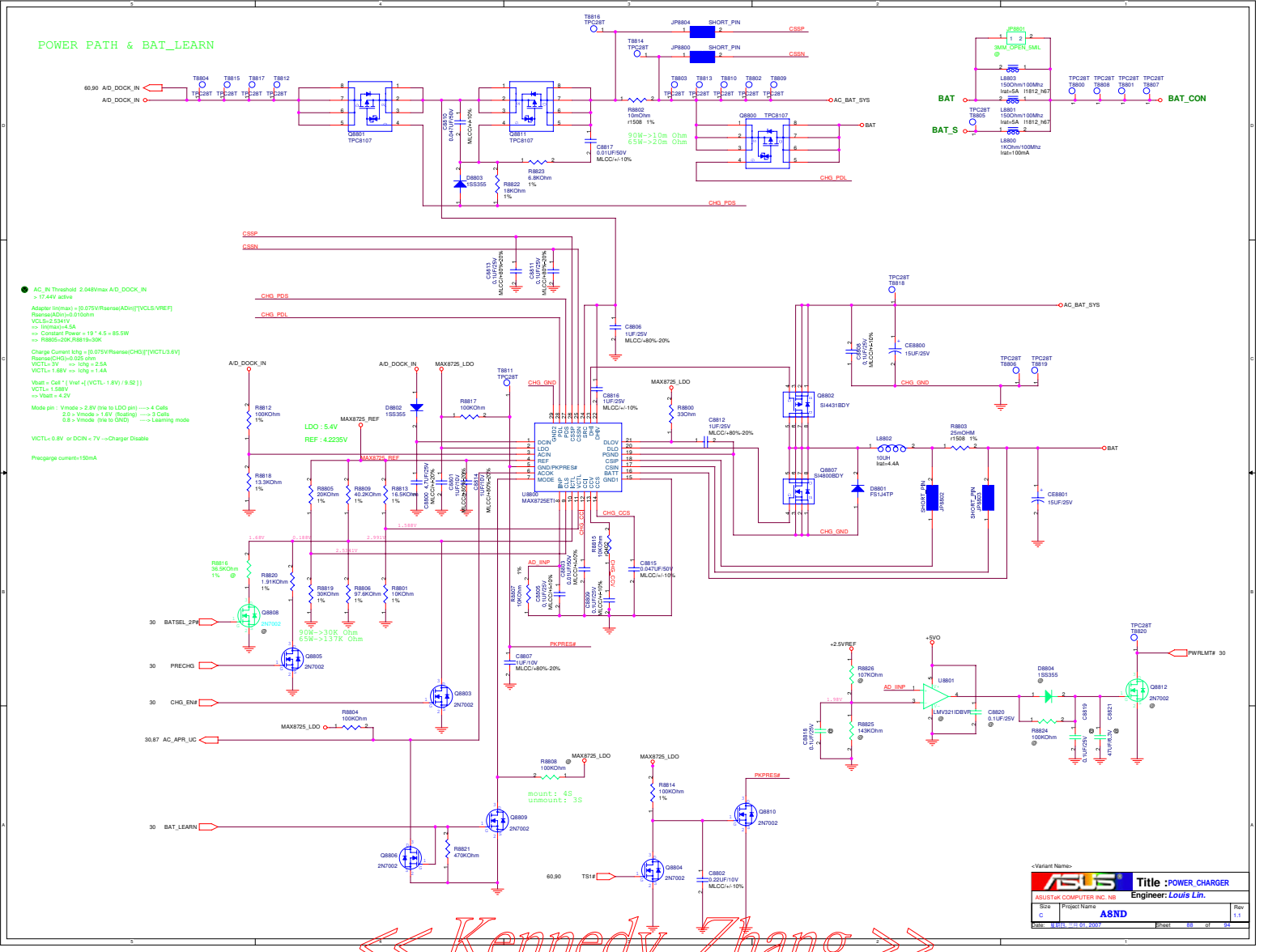

<< Kennedy_Zhang >>

<Variant Name>

	Title : N/A	
<OrgName>	Engineer:	
Size: Custom	Project Name: A8ND	Rev: 1.1
Date: 月曜日, 十月 01, 2007	Sheet 89 of 94	

<< Kennedy_Zhang >>

BATTERY IN DETECT

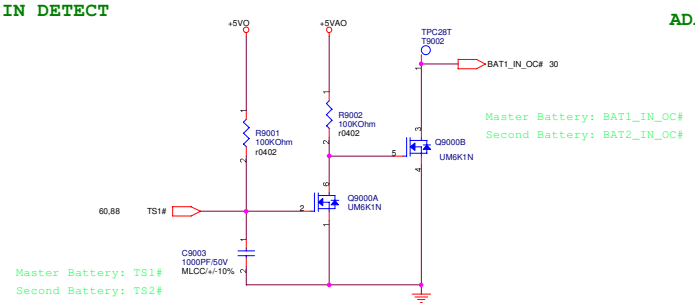

ADAPTER IN DETECT

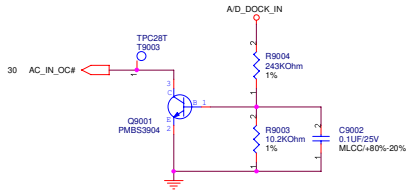

+2.5VREF

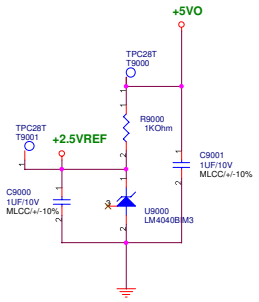

<Variant Name>

ASUSTeK COMPUTER INC. NB	Title : POWER_DETECT	
	Engineer: Louis Lin.	
Size: Custom	Project Name: A8ND	Rev: 1.1
Date: 月四, 二月 01, 2007	Sheet 90 of 94	

<< Kennedy_Zhang >>

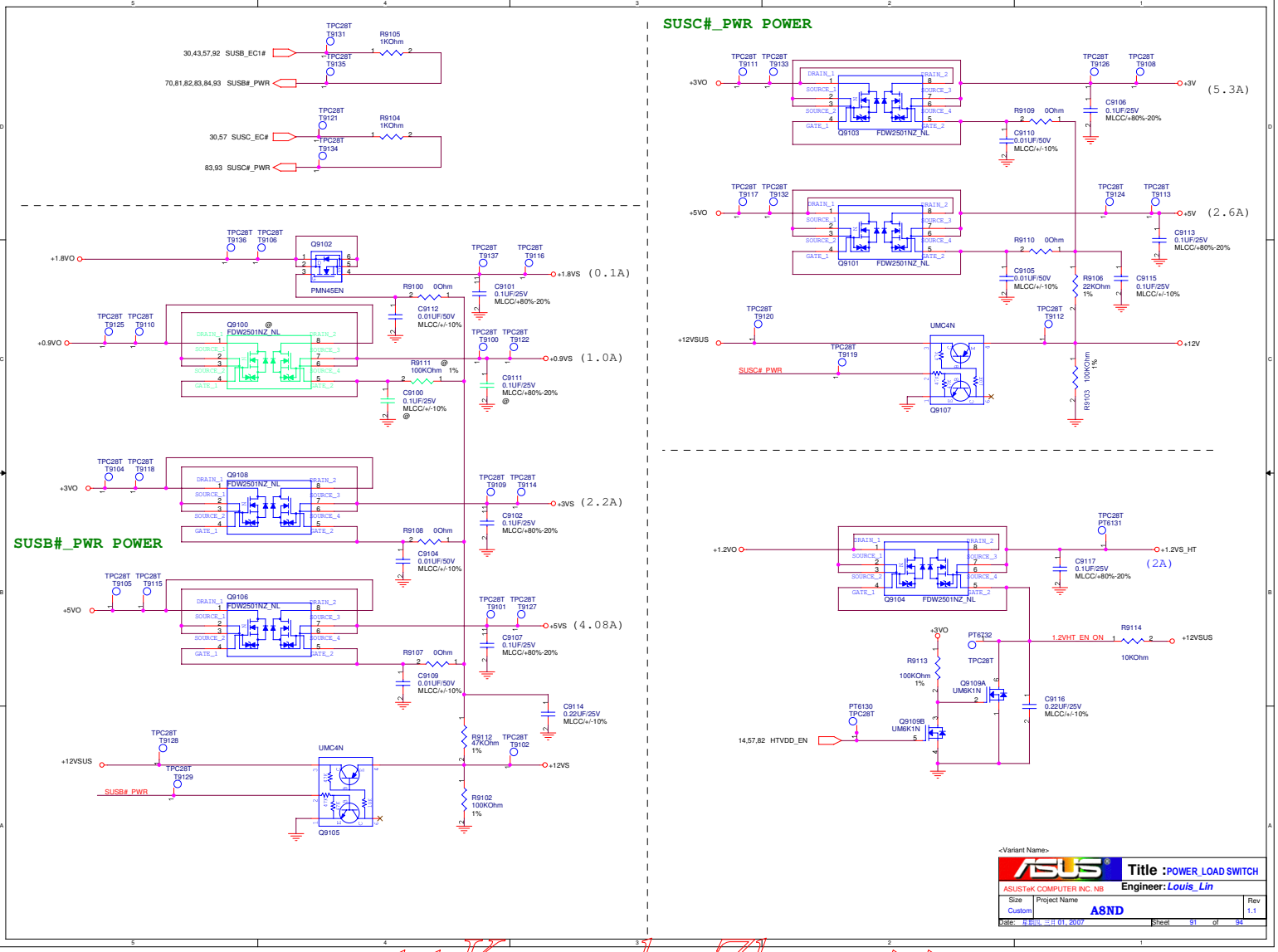

<Variant Name>

ASUSTeK COMPUTER INC. NB

Title : POWER_LOAD SWITCH

Engineer: Louis_Lin

Size	Project Name	Rev
Custom	A8ND	1.1

Date: 月四, 二月 01, 2007 Sheet 91 of 94

<< Kennedy_Zhang >>

POWER GOOD DETECTER

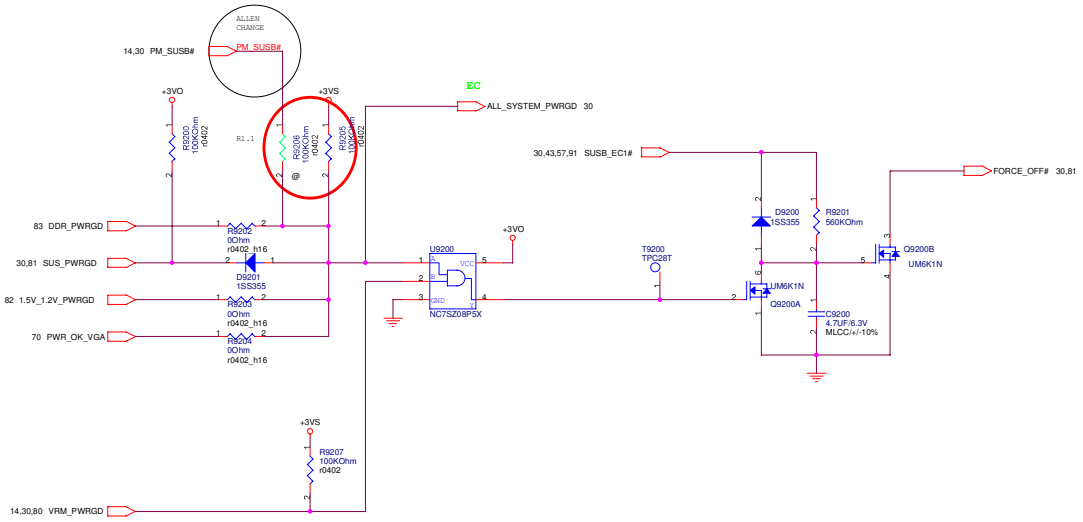

<Variant Name>

ASUSTeK COMPUTER INC. NB	Title : POWER_PROTECT	
	Engineer: Louis Lin.	
Size: Custom	Project Name: A8ND	Rev: 1.1
Date: 月四, 二月 01, 2007	Sheet 92 of 94	

<< Kennedy_Zhang >>

AC_BAT_SYS	AC_BAT_SYS	45,70,80,81,82,83,87,88
BAT	BAT	88
BAT_CON	BAT_CON	60,88
+2.5VREF	+2.5VREF	84,87,88,90
+3VA	+3VA	13,14,30,57,81,82
+5VAO	+5VAO	81,84,90
+5VO	+5VO	81,82,83,84,88,90,91
+5VSUS	+5VSUS	56,81,87
+5V	+5V	3,8,43,52,57,68,70,91
+5VS	+5VS	15,31,36,38,46,47,50,51,56,57,68,80,91
+3VO	+3VO	81,82,84,91,92
+3VSUS	+3VSUS	3,10,11,12,13,14,30,33,43,53,57,81,82
+3V	+3V	34,43,45,53,56,57,61,62,84,91
+3VS	+3VS	3,7,8,10,11,12,13,14,15,30,36,38,40,41,42,43,45,46,47,49,50,51,53,55,57,62,68,70,80,82,91,92
+12VSUS	+12VSUS	81,91
+12V	+12V	38,42,52,57,84,91
+12VS	+12VS	38,45,57,70,91
+1.8VO	+1.8VO	70,83,91
+1.8V	+1.8V	3,5,7,8,9,57,83
+1.8VS	+1.8VS	3,11,57,91
+0.9VS	+0.9VS	91
+0.9VO	+0.9VO	83,91
+1.5VO	+1.5VO	82
+1.5VS	+1.5VS	43,53,57,70,82
+2.5VO	+2.5VO	84
+2.5VS	+2.5VS	3,57,70,84
+VCORE	+VCORE	5,80
+1.25VS	+1.25VS	
+1.2VSUS	+1.2VSUS	11,13,84
+1.2VS	+1.2VS	10,12,13,57,82
+1.2VO	+1.2VO	82,91

FOR POWER TEST

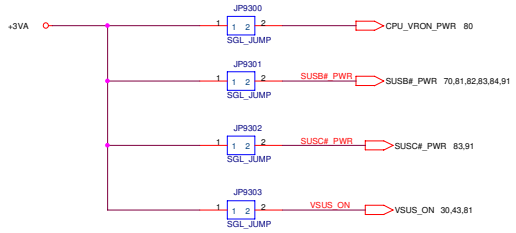

<Variant Name>

ASUS	Title : POWER_SIGNAL	
<OrgName>	Engineer: Louis Lin.	
Size: Custom	Project Name: A8ND	Rev: 1.1
Date: 月四, 二月 01, 2007	Sheet 93 of 94	

<< Kennedy_Zhang >>

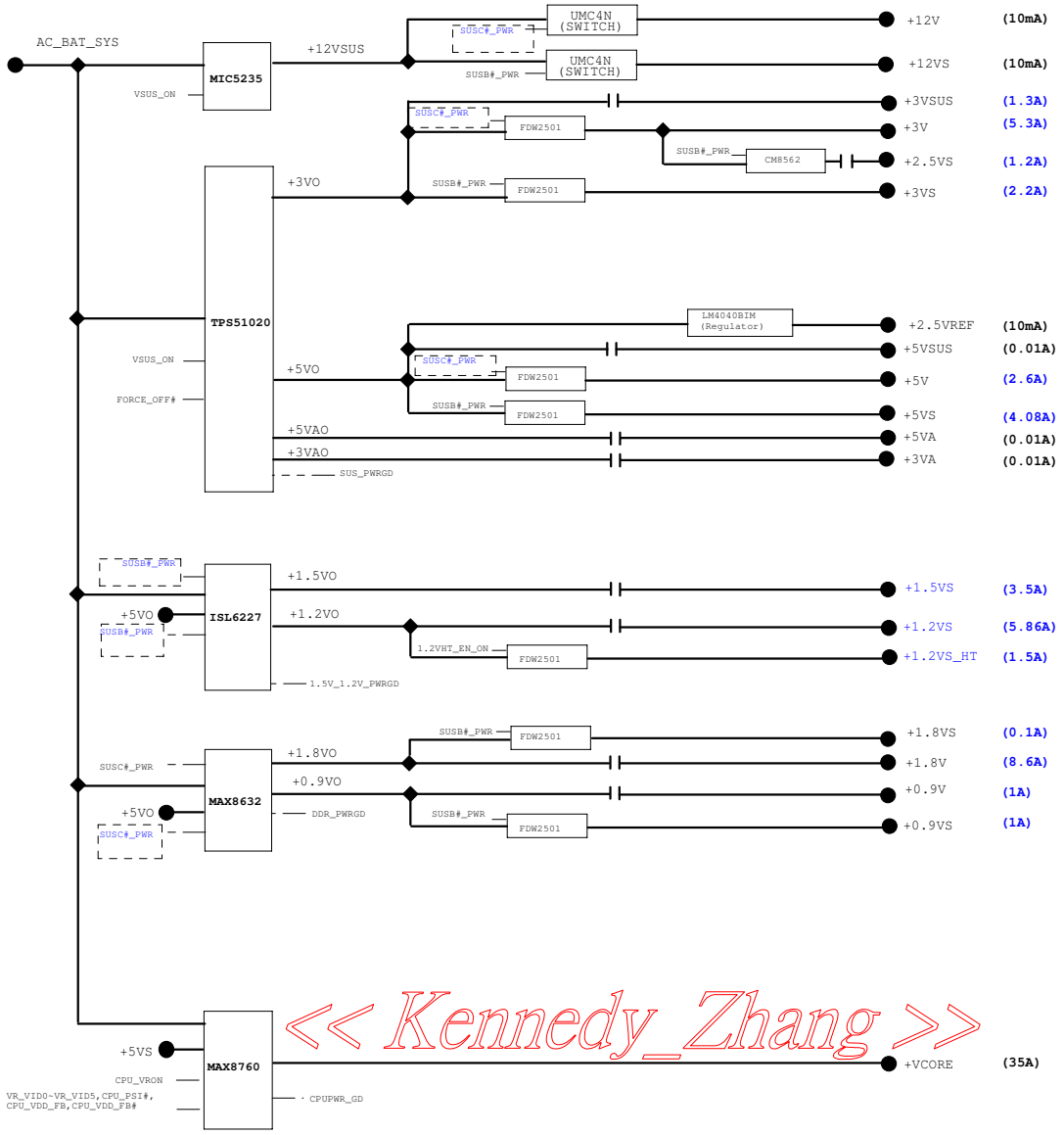

<< Kennedy_Zhang >>

<Variant Name>

ASUSTeK COMPUTER INC. NB

Title : POWER_FLOWCHART

Engineer: Louis_Lin

Size	Project Name	Rev
Custom	A8ND	1.1

Date: 日期, 一月 01, 2007 Sheet 94 of 94